Bridge Manual

Title Page

Prepared by:

Bureau of Bridges and Structures
Division of Highways

Agency:

Illinois Department of Transportation

Place of Publication:

Springfield Illinois

2012

List of Figures and Tables ..... Error! Bookmark not defined.
Section 1 Introduction **1-16**
1.1 Bridge Policy **1-16**
1.1.1 LRFD and LFD Bridge and Structure Design 1-16
1.1.2 Seismic Design of Bridges 1-17
1.1.3 Manual Updates, All Bridge Designer Memoranda (ABD), and Other Supplemental Electronic Documents 1-18
1.2 Organizations and Functions **1-19**
1.2.1 Services Development Section 1-19
1.2.2 Bridge Planning Section 1-19
1.2.2.1 Project Planning and Consultant Prequalification Units 1-20
1.2.2.2 Hydraulics Unit 1-20
1.2.2.3 Foundations and Geotechnical Unit 1-21
1.2.3 Bridge Design Section 1-22
1.2.3.1 Policy, Standards and Specifications Unit 1-23
1.2.3.2 Bridge Design & Review Units 1-23
1.2.3.3 Construction Liaison Unit 1-24
1.2.3.4 Shop Drawings & Steel Fabrication Inspection Unit 1-24
1.2.4 Structural Services Section 1-24
1.2.4.1 Bridge Investigations and Repair Plans Unit 1-24
1.2.4.2 Local Bridge Unit 1-25
1.2.4.3 Structural Ratings and Permits Unit 1-26
1.3 Preparation of Bridge and Structure Plans **1-27**
1.4 Consulting Engineers **1-28**
1.4.1 Plan Development Outline 1-29
1.4.1.1 "Interim Plan-Review" Meeting Requirements 1-31
1.4.2 Quality Verification Statement 1-31
Section 2 Planning **2-2**
2.1 General Planning Process **2-2**
2.1.1 Goal 2-2
2.1.2 Bridge and Structure Specifications 2-2
2.1.3 Context Sensitive Solutions 2-3
2.1.4 Structure Types 2-3
2.1.5 Planning Tasks 2-4
2.1.5.1 Bridge Condition Report (BCR) 2-4

2.1.5.2 Type Size and Location Plan 2-5
2.1.5.3 Structure Geotechnical Report and Hydraulic Report..... 2-6
2.1.5.4 Consultant Man Hour Evaluations..... 2-6
2.1.5.5 Utility Attachments..... 2-7
2.1.6 Responsibilities 2-8
2.1.6.1 District 2-8
2.1.6.2 Consultant 2-8
2.1.6.3 Bureau of Bridges and Structures Planning Section..... 2-8
2.1.7 Reference Manuals 2-9
2.2 Bridge Condition Reports..... 2-10
2.2.1 Definition……. 2-10
2.2.2 BCR Types….. 2-11
2.2.2.1 Bridge Condition Report..... 2-11
2.2.2.2 Abbreviated Bridge Condition Report..... 2-11
2.2.2.3 ISIS Master Report 2-12
2.2.2.4 Bridge Condition Report Not Required..... 2-12
2.2.3 BCR Content…..... 2-12
2.2.3.1 Bridge Inspection and Documentation 2-12
2.2.3.2 Delamination Surveys..... 2-13
2.2.3.3 Bridge Condition and Geometric Analysis..... 2-13
2.2.3.4 Recommendation..... 2-14
2.2.3.4.1 Scope-of-Work..... 2-14
2.2.3.4.2 Bridge Width 2-14
2.2.3.4.3 Maintenance of Traffic..... 2-15
2.2.3.4.4 Proposed Structure Sketch 2-15
2.2.4 Hydraulic Analysis Summary..... 2-17
2.2.5 BCR Submittals and Timelines..... 2-17
2.2.6 Example Bridge Condition Report Format 2-17
2.3 Type Size and Location Plans..... 2-18
2.3.1 Introduction…..... 2-18
2.3.2 Submittal Requirements 2-18
2.3.3 Submittals and Timelines for TSL Plans 2-19
2.3.3.1 In-House TSL Plans..... 2-19
2.3.3.2 Consultant TSL Plans 2-19
2.3.4 Preliminary Guidelines, Investigations and Reports..... 2-19
2.3.4.1 Structure Report 2-19

2.3.4.1.1 General 2-19
2.3.4.1.2 Content 2-20
2.3.4.1.3 Preparation and Submittal 2-20
2.3.4.2 Hydraulic Report Coordination 2-23
2.3.4.3 Structure Geotechnical Report and Subsurface Investigation 2-23
2.3.4.4 Location Study Reports 2-24
2.3.4.5 TSL Guidelines 2-25
2.3.4.5.1 Bridge Length 2-25
2.3.4.5.2 Pier Location and Type 2-25
2.3.4.5.3 Superstructure Types 2-26
2.3.5 TSL Plan Types 2-26
2.3.5.1 Highway Bridges 2-27
2.3.5.2 Railroad Bridges 2-27
2.3.5.3 Culverts and Three Sided Structures 2-27
2.3.5.4 Pedestrian Bridges 2-28
2.3.5.5 Retaining Walls 2-28
2.3.6 Bridge Type Study 2-28
2.3.6.1 Superstructure Component Selection 2-31
2.3.6.1.1 Structural Steel 2-31
2.3.6.1.2 Prestressed Concrete Deck Beams 2-32
2.3.6.1.3 Prestressed Concrete I-Beams and Bulb-T Beams 2-46
2.3.6.1.4 Slab Bridges 2-60
2.3.6.1.5 Bearing Type 2-60
2.3.6.1.6 Bridge Deck Expansion Joints 2-60
2.3.6.1.7 Bridge Railing 2-63
2.3.6.1.8 Bridge Deck Drainage 2-66
2.3.6.2 Substructure Component Selection 2-70
2.3.6.2.1 Abutment Type 2-70
2.3.6.2.2 Pier Type 2-72
2.3.6.3 Foundation Component Selection 2-82
2.3.6.3.1 Foundation Type 2-82
2.3.6.3.2 Scour Consideration and Design Scour Table 2-91
2.3.6.3.3 Slope Protection and Berms 2-97
2.3.6.4 Temporary Construction Works 2-104
2.3.6.4.1 Temporary Sheet Piling and Temporary Soil Retention Systems 2-104

2.3.6.4.2 Cofferdams 2-104
2.3.6.4.3 Temporary MSE Walls and Temporary Geotextile Retaining Walls 2-107
2.3.7 Bridge Geometry and Layout 2-107
2.3.7.1 Overall Length 2-107
2.3.7.1.1 Horizontal Clearance 2-108
2.3.7.1.2 Vertical Clearance 2-108
2.3.7.2 Bridge Width 2-109
2.3.7.3 Skew Angle 2-109
2.3.7.4 Cross Slopes 2-110
2.3.7.4.1 Tangent Sections 2-110
2.3.7.4.2 Superelevation Development 2-110
2.3.7.5 Sidewalks 2-113
2.3.7.6 Curved Alignment 2-113
2.3.7.7 Traffic Barriers 2-114
2.3.7.8 Grinding and Smoothness Criteria 2-115
2.3.8 Maintenance of Traffic 2-115
2.3.9 Hydraulic Issues 2-116
2.3.9.1 IDNR-OWR 2-116
2.3.9.2 Permit Sketches 2-117
2.3.9.3 Bridges Over Navigable Waterways 2-123
2.3.10 Seismic Issues 2-125
2.3.10.1 Seismic Design of New Bridges 2-126
2.3.10.2 Retrofitting of Existing Bridges 2-127
2.3.10.3 Seismic Data 2-128
2.3.11 Culvert and Three Sided Precast Concrete Structure Selection Process 2-134
2.3.11.1 Culverts 2-134
2.3.11.1.1 General 2-135
2.3.11.1.2 Use Limitations 2-135
2.3.11.1.3 Processing Requirements 2-136
2.3.11.2 Three Sided Precast Concrete Structures 2-136
2.3.11.2.1 Use Limitations 2-137
2.3.11.2.2 Planner/Designer Responsibilities 2-138
2.3.11.2.3 Site Limitations 2-138
2.3.11.2.4 Plan Processing Procedures 2-139
2.3.11.3 Hydraulic Issues 2-139
2.3.11.4 Foundation Issues 2-140

2.3.11.4.1 Culverts 2-140
2.3.11.4.2 Three Sided Precast Concrete Structures 2-145
2.3.11.5 Culvert Nesting Ledge Issues 2-146
2.3.12 Retaining Wall Selection Process 2-148
2.3.12.1 MSE Walls 2-149
2.3.12.2 Cast-In-Place T-Type Walls 2-150
2.3.12.3 Soldier Pile Walls 2-151
2.3.12.4 Permanent Sheet Piling 2-152
2.3.12.5 Anchors 2-153
2.3.13 Type Size and Location Presentation 2-153
2.3.13.1 Checklist for Bridges 2-153
2.3.13.2 Checklist for Culverts and Three Sided Structures 2-160
2.3.13.3 Checklist for Retaining Walls 2-165
2.3.14 Sample Type Size and Location Plans 2-170
2.3.15 Deliverables 2-173
2.3.15.1 BBS Prepared TSL Plans 2-173
2.3.15.2 Consultant Prepared TSL Plans 2-174
2.4 Structure Reconstruction/Rehabilitation 2-175
2.4.1 Definition and Submittal Requirements 2-175
2.4.2 Evaluation Process 2-175
2.4.2.1 Abutment Widening 2-175
2.4.2.2 Pier Widening 2-176
2.4.2.3 Semi-Integral Abutments 2-177
2.4.2.4 Retrofit of Existing Welded Cover Plates 2-177
2.4.2.5 Distortion-Induced Fatigue Details 2-178
2.4.2.6 Re-Decking, Beam Widenings and New Superstructures on Existing Substructure Units 2-178
2.4.3 TSL Plan Preparation and Sample TSL Plans 2-179
2.5 Utility Attachments 2-179
2.5.1 Computation of Cost Assessment 2-180
2.6 Permits Projects 2-182
Section 3 Design 3-1
3.1 General 3-1
3.1.1 Plan Presentation 3-1
3.1.2 Content of Bridge Plans 3-2

3.1.3 General Notes……3-2
3.1.4 Reinforcement Presentation 3-11
3.1.5 Reinforcement Designation 3-13
3.1.6 Total Bill of Material (General Plan & Elevation Sheet) 3-13
3.1.7 Bill of Material (Individual Elements of Bridge) 3-14
3.1.8 Basic Geometry & Footing Layout 3-14
3.1.9 Top of Slab Elevations 3-19
3.1.10 Designation of Roadway Crown on Plans 3-27
3.1.11 Boring Logs and Subsurface Data Profile Plot 3-27
3.1.12 Table of Moments and Shears 3-27
3.1.13 Checklist for Use in Final Plan Preparation 3-51
3.1.14 Submittals and Timelines for Final Plans 3-61
3.2 Deck 3-63
3.2.1 Concrete Deck Slabs on Stringers 3-63
3.2.1.1 Design Criteria Overview 3-67
3.2.2 Reinforcement (Concrete Deck Slabs on Stringers) 3-70
3.2.2.1 Reinforcement (Treatment of Decks at End Diaphragms) 3-71
3.2.3 Reinforcement (Treatment of Skewed Decks) 3-76
3.2.4 Parapet & Sidewalk Sections 3-76
3.2.4.1 Parapet Joints (Concrete Deck on Stringers) 3-77
3.2.5 Raised Curb Medians 3-91
3.2.6 Longitudinal Bonded Joints (Concrete Deck on Steel Stringers) 3-94
3.2.7 Longitudinal Open Joints 3-94
3.2.8 Transverse Construction Joints 3-97
3.2.9 Deck Slab Drains and Drainage Scuppers 3-98
3.2.10 Light Poles and Parapet Conduit 3-108
3.2.11 Slab Bridges (Main Reinforcement Parallel to Traffic) 3-112
3.2.12 Bridge Approach Slabs and Approach Footings 3-120
3.3 Structural Steel 3-123
3.3.1 Distribution of Loads to Beams and Girders 3-123
3.3.2 Limiting Live Load Deflection of Beams and Girders 3-126
3.3.3 Uplift at End Reactions 3-127
3.3.4 Design of Steel Members- General 3-128
3.3.4.1 Fatigue Analysis 3-129
3.3.5 Design of Steel Beams and Girders – Lateral Stresses 3-130
3.3.6 Design of Steel Beams and Girders – Moment Redistribution 3-130

3.3.7 Notch Toughness Requirements 3-131
3.3.8 Cover Plates… 3-131
3.3.9 Composite Beam Design - Shear Connectors 3-134
3.3.10 Curved Member Diaphragms and Cross Frames..... 3-137
3.3.11 Welded Girder Flange Transitions 3-137
3.3.12 Camber…….. 3-142
3.3.13 Fillet Welds… 3-143
3.3.14 Intermediate Vertical Stiffeners..... 3-144
3.3.15 Cross Frame and Diaphragm Connection Plates..... 3-144
3.3.16 Bearing Stiffeners..... 3-145
3.3.17 Structural Steel Framing..... 3-145
3.3.18 Minimum Concrete Fillet Heights..... 3-148
3.3.19 Lateral Bracing 3-148
3.3.20 Longitudinal Stiffeners..... 3-149
3.3.21 Bolted Field Splices..... 3-149
3.3.22 Interior Diaphragms and Cross Frames..... 3-155
3.3.23 End Diaphragms and Frames..... 3-161
3.3.23.1 End Diaphragms and Frames at Finger Plate and Modular Joints 3-170
3.3.24 Erection and Holes in Diaphragms, Cross Frames & Lateral Bracing Members.. 3-175
3.3.25 Intermediate Diaphragm or Cross Frame Connections for Stage Construction... 3-176
3.3.26 Constructability..... 3-177
3.3.27 Minimum Steel Plate Thicknesses..... 3-178
3.3.28 Computation of Structural Steel Quantities..... 3-178
3.4 PPC I-Beams and PPC Bulb T-Beams 3-180
3.4.1 Distribution of Loads to Beams..... 3-180
3.4.2 Design of PPC I-Beams and PPC Bulb T-Beams – General..... 3-180
3.4.3 Stress Limits… 3-181
3.4.4 Strand Pattern Charts for Moment..... 3-182
3.4.4.1 Strand Patterns for Simple and Continuous Span Applications..... 3-182
3.4.4.2 Standard Beam Cross Sections and Typical Strand Layout..... 3-196
3.4.4.3 Concrete Fillets over Prestressed Beams..... 3-204
3.4.5 Design for Shear 3-206
3.4.5.1 Ultimate Strength Design of Primary Transverse Reinforcement 3-206
3.4.5.2 Standard Transverse Reinforcement Patterns 3-206
3.4.6 Camber and Deflections..... 3-209

3.4.7 Lifting Loops… 3-209
3.4.8 Splitting Steel.. 3-211
3.4.9 Permanent Bracing..... 3-213
3.4.10 Continuity Diaphragms over Piers 3-217
3.5 PPC Deck Beams 3-224
3.5.1 Design Guide..... 3-224
3.5.2 Stress Limits… 3-225
3.5.3 Strand Pattern Tables..... 3-225
3.5.4 Design Properties and Standard Beam Cross Sections..... 3-232
3.5.5 Design for Shear 3-245
3.5.6 Fixed Substructures 3-245
3.5.6.1 Abutment Sections..... 3-245
3.5.6.2 Pier Sections 3-250
3.5.6.3 Fixed Bearings..... 3-250
3.5.7 Expansion Substructures..... 3-255
3.5.7.1 Abutment Sections..... 3-255
3.5.7.2 Pier Sections 3-255
3.5.7.3 Expansion Bearings..... 3-261
3.5.7.4 Expansion Joint Treatments 3-261
3.5.7.5 Retainer Angles 3-261
3.5.8 Railings……..... 3-266
3.5.9 Miscellaneous Details..... 3-266
3.6 Expansion Devices 3-271
3.6.1 Expansion Joint Limitations 3-271
3.6.2 Sealed Expansion Joints 3-271
3.6.2.1 Strip Seal Joints..... 3-271
3.6.2.2 Finger Plate Expansion Joint with Trough..... 3-272
3.6.2.3 Modular Joints 3-274
3.6.3 Sealed Fixed Joints 3-274
3.6.4 Substructure Treatments 3-274
3.7 Bearings 3-292
3.7.1 Bearing Assemblies..... 3-292
3.7.1.1 Elastomeric Bearings..... 3-292
3.7.1.2 Fixed Bearings..... 3-292
3.7.1.3 High Load Multi-Rotational (HLMR) Bearings – Pot and Disc 3-296
3.7.1.4 Bearings for Prestressed Beam Bridges 3-296

3.7.1.5 Seismic Isolation Bearings 3-296
3.7.1.6 Uncommon or Historical Bearing Types 3-297
3.7.2 Anchor Bolt Details 3-297
3.7.3 Seismic Requirements 3-297
3.7.3.2 Seismic Requirements for Deck Beam Bridges 3-302
3.7.4 Elastomeric Expansion Bearing Assemblies 3-302
3.7.5 High Load Multi-Rotational (HLMR) Bearings 3-331
3.8 Abutments 3-335
3.8.1 General 3-335
3.8.2 Reinforcement 3-335
3.8.3 Open Abutments: Integral 3-336
3.8.4 Open Abutments: Semi-Integral 3-345
3.8.5 Open Abutments: Stub 3-350
3.8.6 Closed Abutments – General 3-358
3.8.7 Closed Abutments – Restrained Top and Bottom 3-362
3.8.8 Closed Abutments – Cantilever Type 3-367
3.8.9 Vaulted Abutments 3-367
3.8.10 Approach Slab Support 3-375
3.8.11 Bridge Seats 3-375
3.8.12 End of Slab Treatment 3-376
3.8.13 Electrical Conduit in Abutments 3-378
3.8.14 Abutments for Deck Beams 3-381
3.9 Piers 3-386
3.9.1 General 3-386
3.9.2 Reinforcement 3-386
3.9.3 Pier Design Loadings 3-386
3.9.3.1 Dynamic Load Allowance (Impact) 3-387
3.9.3.2 Transmission of Transverse and Longitudinal Forces 3-387
3.9.3.3 Wind 3-387
3.9.3.4 Temperature, Shrinkage, Creep and Settlement 3-388
3.9.3.5 Ice Forces 3-389
3.9.3.6 Vessel Collision Forces 3-390
3.9.3.7 Vehicle Collision Forces 3-390
3.9.3.8 Earthquake, Liquefaction and Scour 3-391
3.9.4 Footing Supported Piers 3-391

3.9.4.1 Circular and Trapezoidal Column Bents with Cap Beam and Crashwall 3-391
3.9.4.2 Solid Wall and Hammerhead Bents 3-392
3.9.4.3 Pier Footings 3-393
3.9.5 Individually Encased Pile Bent Piers and Column Drilled Shaft Bent Piers 3-394
3.9.6 Solid Wall Encased Pile and Drilled Shaft Bent Piers 3-397
3.9.7 Other Drilled Shaft Pier Types 3-399
3.9.7.1 Column-Web Wall Drilled Shaft Bent Pier 3-399
3.9.7.2 Transfer Beam Drilled Shaft Bent Pier 3-399
3.9.8 Bridge Seats… 3-399
3.9.9 Piers for Deck Beams 3-400
3.10 Foundations 3-402
3.10.1 Piles……. 3-402
3.10.1.1 Introduction 3-402
3.10.1.2 Nominal Required Bearing 3-402
3.10.1.2.1 Maximum Nominal Required Bearing 3-403
3.10.1.3 Factored and Allowable Resistance Available 3-405
3.10.1.4 Structural Resistance 3-407
3.10.1.5 Geotechnical losses (Scour, Downdrag and Liquefaction) 3-409
3.10.1.5.1 Scour 3-409
3.10.1.5.2 Downdrag 3-410
3.10.1.5.3 Liquefaction 3-411
3.10.1.6 Estimated Pile Lengths 3-412
3.10.1.7 Test Piles 3-413
3.10.1.8 Pile Shoes 3-414
3.10.1.9 Corrosion Protection of Piles 3-414
3.10.1.10 Design for Lateral Loading 3-415
3.10.1.11 Pile Spacing 3-416
3.10.1.12 Pile Connection to Abutments, Piers and Footings 3-417
3.10.1.13 Pile Data Plan Information 3-417
3.10.2 Drilled Shafts 3-419
3.10.2.1 Geotechnical Axial Resistance 3-419
3.10.2.2 Geotechnical Losses (Scour, Downdrag and Liquefaction) 3-420
3.10.2.3 Lateral Resistance 3-420
3.10.2.4 Structural Resistance 3-421
3.10.2.5 Shafts for Abutments, Piers, and Walls 3-422
3.10.2.6 Shafts for Other Structures 3-422

3.10.3 Spread Footings 3-422
3.10.3.1 Bearing Resistance 3-423
3.10.3.2 Sliding Resistance 3-424
3.10.3.3 Settlement 3-426
3.10.3.4 Structural Resistance 3-426
3.11 Retaining Walls 3-427
3.11.1 Mechanically Stabilized Earth (MSE) 3-427
3.11.1.1 Coping 3-432
3.11.1.2 Load Transfer Around Drainage Structures and Pipe Pass Through 3-434
3.11.1.3 Anchorage Slab and Section Thru Parapet 3-437
3.11.1.4 Abutments 3-440
3.11.2 Cast-In-Place T-Type 3-444
3.11.2.1 Geometry 3-444
3.11.2.2 Loads 3-445
3.11.2.3 Drainage and Backfill Details 3-449
3.11.3 Soldier Pile 3-452
3.11.3.1 Driven or Drilled 3-452
3.11.3.2 Facing Alternatives 3-453
3.11.3.2.1 CIP Facing 3-453
3.11.3.2.2 Treated Timber 3-460
3.11.3.2.3 Precast Facing 3-462
3.11.3.3 Anchorage Slab, Section Thru Parapet and Railing 3-462
3.11.3.4 Drainage 3-467
3.11.4 Permanent Sheet Pile 3-470
3.11.4.1 Facing Alternatives 3-472
3.11.5 Wall Anchorage Systems 3-472
3.11.5.1 Deadman 3-472
3.11.5.2 Helical Ground Anchors 3-475
3.11.5.3 Permanent Ground Anchors 3-475
3.11.5.4 Anchor Head Assemblies 3-475
3.11.6 Soil Nailed and Other Specialized Wall Systems 3-478
3.12 Noise Walls 3-479
3.13 Temporary Construction Works 3-481
3.13.1 Temporary Sheet Piling, Temporary Soil Retention Systems and Braced Excavations 3-481

3.13.2 Temporary Geotextile Walls and Temporary MSE Systems 3-485
3.13.3 Cofferdams and Seal Coats..... 3-491
3.14 Embankment and Slopewalls 3-494
3.14.1 Embankment……3-494
3.14.2 Slopewalls - General 3-494
3.14.3 Abutment Berms..... 3-494
3.14.4 Slopewalls (Grade Separations) 3-498
3.14.4.1 Concrete 3-498
3.14.4.2 Bituminous..... 3-502
3.14.5 Slope Protection Systems (Stream Crossing) 3-504
3.15 Seismic Design..... 3-506
3.15.1 Introduction… 3-506
3.15.2 Design Earthquake, and Seismic Performance Zones and Categories..... 3-507
3.15.3 Earthquake Resisting Systems - General 3-508
3.15.3.1 Description..... 3-508
3.15.3.2 Range of Applicability 3-509
3.15.4 Earthquake Resisting Systems - Specifics..... 3-511
3.15.4.1 Superstructure to Substructure Connections: Level 1 Redundancy 3-512
3.15.4.2 Support Lengths: Level 2 Redundancy 3-513
3.15.4.3 Substructures and Foundations: Level 3 Redundancy 3-514
3.15.4.3.1 ϕ Factors 3-515
3.15.4.3.2 Foundation Issues..... 3-515
3.15.4.3.3 Circular and Trapezoidal Column Bents with Cap Beam, Crashwall, Footing and Piles..... 3-516
3.15.4.3.4 Solid Wall and Hammerhead Bents with Footing and Piles 3-517
3.15.4.3.5 Individually Encased and Solid Wall Pile Bent Piers..... 3-517
3.15.4.3.6 Drilled Shaft Piers 3-518
3.15.4.3.7 Abutments..... 3-519
3.15.5 Overview of Seismic Detailing Requirements for Substructures and Foundations ……3-519
3.15.5.1 Circular and Trapezoidal Column Bents with Cap Beam and Crashwall 3-519
3.15.5.2 Solid Wall and Hammerhead Bents with Footings..... 3-526
3.15.5.3 Individually Encased and Solid Wall Pile Bent Piers 3-531
3.15.5.4 Drilled Shaft Piers 3-531
3.15.5.5 Piles..... 3-539
3.15.5.6 Spread Footings 3-541

3.15.5.7 Closed Abutments 3-541
3.15.6 Overview of Global Analysis and Design Methods 3-541
3.15.6.1 Fundamental Period and Base Shears 3-542
3.15.6.2 Transverse Models 3-542
3.15.6.3 Longitudinal Models 3-544
3.15.7 Seismic Retrofitting of Existing Bridges 3-544
3.15.8 Local Bridge Flexible Design Option for 1000 Year Return Period Earthquake ... 3-551
3.16 Design Guides 3-553
3.17 Miscellaneous Details 3-554
Section 4 Appendix 4-2
4.1 Design Aids 4-2
4.2 Base Sheets 4-28

Section 1 Introduction

1.1 Bridge Policy

As directed by the Engineer of Bridges and Structures, it is the responsibility of the Engineer of Bridge Design to develop, maintain and administer the policies that govern the design and preparation of plans and specifications for all structures under the jurisdiction of the Division of Highways and for structures under the jurisdiction of other agencies when Departmental approval of the project is required by State Statute.

This Manual, supplemented by the Culvert Manual, Drainage Manual, Geotechnical Manual, Sign Structures Manual, and Structural Services Manual, is the vehicle by which these policies are controlled. Presented herein is a compilation of design and plan presentation procedures, specification interpretations, standard practices, and details which constitute "policy". While this manual attempts to unify and clarify bridge and structure design policy performed by or for the IDOT Division of Highways, it does not preclude justifiable exceptions, subject to the approval of the Engineer of Bridges and Structures, provided these exceptions are based upon sound engineering principles. Good design practice will always require a combination of basic engineering principles, experience, and judgment in order to furnish the best possible structure, within reasonable economic limitations, to suit an individual site. The policies in this manual have been established primarily for application to typical highway structures using conventional construction methods. These polices are subject to re-examination and may not be applicable to long span, complex curved, or high clearance structures such as major river crossings or multi-level interchange complexes.

1.1.1 LRFD and LFD Bridge and Structure Design

The Illinois Department of Transportation is currently transitioning from the AASHTO "Standard Specifications for Highway Bridges - Division I & IA" (LFD or ASD) to the AASHTO "LRFD Bridge Design Specifications" (LRFD) for new bridge construction. It is anticipated that this process will be ongoing over the next few years. As such, this manual is written for both the AASHTO Standard and LRFD Specifications.

Generally, bridges which will undergo rehabilitation such as re-decking or widening will be designed according to the LFD specifications. Some new bridges, especially on the Local Bridge System, will still be designed according to the LFD specifications for an indeterminate period of time as well. On the State Bridge System, the portion of new and reconstructed bridges which will be designed exclusively according to the LRFD specifications will continue to increase. See also Section 2.1.2 for additional information.

For the convenience of the reader, a notation system for this manual has been adopted that differentiates between portions of sections which deal with LRFD only, LFD only, and LRFD and LFD. As appropriate, the headings "*LRFD*", "*LFD*", and "*LRFD and LFD*" in italicized and underlined type will appear in the manual. Some sections are not specification dependent and consequently contain no delineations. The Design Section (Section 3) of this manual is the primary place where these headings appear.

1.1.2 Seismic Design of Bridges

LRFD and LFD

The design of bridges to resist seismic loadings has become an increasing focus since the mid to late 1990's in Illinois. This has become more apparent with the adoption of the 1000 yr. design return period earthquake loading into the LRFD Code in 2008. The previous earthquake design loading was for a 500 yr. return period earthquake. The 500 yr. design return period earthquake as specified in the LFD Code, however, is still relevant primarily for bridges in Illinois which are undergoing seismic retrofit.

The policies and details within this manual meet the minimum AASHTO requirements for Seismic Performance Zone 1 (LRFD) and Category A (LFD) with a low probability of being exceeded during the normal life expectancy for a bridge. Bridges and their components that are designed or retrofitted to resist Zone 1 or Category A forces and constructed in accordance with the design details contained in this manual should not experience total collapse, but may sustain repairable damage due to seismically induced ground shaking. Structures in Seismic Performance Zones 2, 3 & 4 (LRFD) or Categories B, C & D (LFD) will require additional analysis as per the appropriate AASHTO Specifications for Seismic Design. However, there should also be a low probability of collapse for structures in these Zones or Categories if the guidance given in this manual is followed.

1.1.3 Manual Updates, All Bridge Designer Memoranda (ABD), and Other Supplemental Electronic Documents

The Bureau of Bridges and Structures (BBS) Manuals are continually reviewed by the BBS Bridge Manual Committee. Updates to the manuals are issued as frequently as needed. Interim updates are done by memos posted on the internet. The most current manuals and information related to IDOT bridge policy, documents and procedures are available on the BBS Documents, Manuals and Procedures website.

The following is an abbreviated list of Memoranda and Supplemental Electronic Documents available at the web page address given above:

1. All Bridge Designers Memoranda (ABD Memos)
2. All Geotechnical Manual User Memoranda (AGMU Memos)
3. Design Guides
4. Sample TSL Plans
5. CADD Cell Libraries, Base Sheets and Detailing Practices
6. Guide Bridge Special Provisions
7. Bridges and Structures Forms

ABD and AGMU Memos are directives from the Bureau of Bridges and Structures advising designers on policy changes. Typically, after a certain trial period, the policies implemented through these memos are eventually incorporated into the manuals.

Design Guides, Sample TSL plans, and CADD related drawings and documents are considered supplemental, but part of the Bridge Manual. These and other available documents are dated and revised as IDOT policy or the AASHTO LRFD Code changes.

The IDOT BBS subscriptions service informs subscribers of changes and updates to information on the BBS web pages. Users of the BBS manuals should subscribe to this service which is available at the web page address given above.

Comments, suggestions and questions from users of the BBS manuals should be sent to: dot.bbs.comsuggest@illinois.gov.

1.2 Organizations and Functions

The Bureau of Bridges and Structures is a part of the Program Development area of the Division of Highways. The Engineer of Bridges and Structures, as head of the Bureau, is responsible for planning, developing and maintaining the State's bridge and structural engineering program, policies, specifications and standards which will facilitate the best utilization of resources for accomplishing the objectives of the Division of Highways. The Bureau of Bridges and Structures also provides the Project Implementation area of the Division with structural and geotechnical expertise during the construction phase of bridge projects.

To fulfill these responsibilities, the Bureau is organized as illustrated in the Organization Charts found on the Bureau's website at http://www.idot.illinois.gov/Assets/uploads/files/Doing-Business/Directories/Highways/BBS%20Printable%20Directory%20Final.pdf

1.2.1 Services Development Section

This Section is responsible for managing the Bureau's operating budget, personnel and salary administration, business service activities, fiscal payment processing, typing services, file maintenance, and administrative staff support. It also conducts and assists with structural inspections on both State and jointly owned structures, and ensures compliance with the National Bridge Inspection Standards (NBIS) for structures under Illinois' jurisdiction. NBIS inspections are conducted for designated Major River Bridges, and assistance is provided to other Departmental inspection staff statewide to assess structural damage and deterioration.

1.2.2 Bridge Planning Section

This Section is under the direct supervision of the Engineer of Bridge Planning. It is composed of four units that are responsible for project programming, and preliminary design of bridges and structures. This includes the hydraulic, geotechnical and foundation engineering for projects. Bridge Planning also has corollary responsibilities for highway drainage design, and roadway geotechnical analysis.

1.2.2.1 Project Planning and Consultant Prequalification Units

Under the direction of the Project Planning Unit Chief, each of the three Development Groups is responsible for project programming and monitoring, bridge management system development, preparation of Inter-State agreements, conducting special engineering studies and reports, and the analysis and approval of man hour requirements for structural engineering/consulting engineering agreements. The Consultant Prequalification Unit Chief is responsible for the bureau's consultant service activities and prequalification of structural engineering consultants.

The Project Planning Unit also prepares detailed economic evaluations of alternate structure types and configurations, conducts structural analyses and aesthetic studies, and formulates the basic type and shape for proposed structures utilizing current State and Federal design policies. It reviews and approves Bridge Condition Reports (BCR), prepares Type, Size and Location Plans (TSL), and reviews those prepared by consultants. The BCR details the scope of work for a bridge project and is utilized in the Project Report to secure design approval. The TSL plan documents the basic features of the structure and is used to obtain final preliminary approval of the details for the basic project parameters required by the designer.

1.2.2.2 Hydraulics Unit

Under the supervision of the Unit Chief, the Hydraulics Unit is responsible for the review and approval of the Hydraulic Report (HR) for bridge projects and the Pump Station Hydraulic Report (PSHR) for storm water pumping stations. For bridge projects, the approval means the waterway opening properly addresses policy and practice controlled in the IDOT Drainage Manual and satisfies any external regulatory requirements. Recommendations generated from Hydraulic Unit approvals are provided to the Project Planning Unit and the Foundations and Geotechnical Unit in support of TSL plan development. The Hydraulics Unit assists both Units in further refinement of preliminary structure details relating to hydraulics, such as bridge alignment\skew, substructure placement, low beam elevation and scour countermeasures. Beyond this involvement in TSL plan development, the unit assists the Bridge Design Section and other Central Office Bureaus within the PS&E process. The Hydraulics Unit also assists the Bridge Investigations & Repair Plans Unit with review and preparation of bridge scour countermeasure plans.

Aside from the PS&E contribution within the Bureau of Bridges & Structures, the primary responsibility of the Hydraulics Unit is the content and upkeep of the IDOT Drainage Manual. In

that capacity, the unit is responsible for the development and implementation of all drainage policy, practice and technical hydrologic and hydraulic (H&H) procedures utilized by the Division of Highways. The Drainage Manual is the primary reference for H&H studies that include, in addition to structure Hydraulic Reports; Location Drainage Studies for roadway improvements, storm drain and detention analysis, bridge scour evaluation\countermeasure design and drainage connection permits. The Hydraulics Unit provides technical support of these District efforts, and also serves as an IDOT clearinghouse for disseminating new methodologies, FHWA activities, research products, and software investigations relating to hydraulics. Technical support is delivered via statewide meetings\informal training sessions such as AHEM, and the annual meeting with District Hydraulic Engineers which is organized by the Hydraulics Unit. The unit also delivers or coordinates formal H&H training for IDOT, Local Agency and consulting personnel through the Bureau of Employee Services, NHI and other agencies. The Hydraulics Unit Chief rates SEFC submittals from consulting firms seeking pre-qualification for IDOT hydraulic work and also is charged with national IDOT representation on several AASHTO, FHWA and NCHRP panels. Finally, the unit creates and leads the IDOT technical review panel for hydraulic research projects initiated by our primary research arm, the Illinois Center for Transportation, or ICT.

1.2.2.3 Foundations and Geotechnical Unit

Under the supervision of the Unit Chief, the Foundations and Geotechnical Unit provides a wide spectrum of geotechnical services to the Central Bureaus and Districts within the Department, consultants or contractors working for the Department, other State and Local Agencies, academia, and other DOTs and national organizations outside the State.

The unit provides geotechnical services during all project phases of planning, design and construction. In the planning phase, the unit assures proper subsurface exploration and geotechnical recommendations, which are contained in the Structure Geotechnical Report (SGR), that are appropriate for use in finalizing the TSL and developing the final design of bridges, major walls, and multiple box culverts. This is accomplished by either preparing or providing approvals of district's or consultant's SGR's during TSL reviews. In the design phase, the unit assists the design section with retaining wall, drilled shaft, repair plan, traffic signal, light tower, and sign structure foundation design. In the construction phase, the Foundations and Geotechnical Unit provides Special Provisions, assists in resolving construction issues and reviews construction submittals including temporary soil retention, tieback design, drilled shaft installation, and value engineering. The unit conducts forensic investigations, foundation underpinning/repairs, and subgrade or slope failure retrofit designs. The unit is charged with continuous maintenance and

updating of the Department's Geotechnical Manual and Subgrade Stability Manual as well as updating all geotechnical/foundation aspects of the Bridge Manual. The unit also provides technical supervision over the Central Soils Lab in order to evaluate/validate the soil data which will be used in the geotechnical analysis or design of structures and roadways. The unit also serves as a conduit for technology transfer by providing various training classes to Districts and their consultants/contractors, facilitating and organizing seminars and conferences, and disseminating innovative research findings to all geotechnical personnel working for the Department (Districts and consultants). In addition to providing geotechnical consultant pre-qualification ratings, and research studies on roadways and structures, it serves on various State and national technical review panels/committees overseeing sponsored research projects.

1.2.3 Bridge Design Section

This Section is under the direct supervision of the Engineer of Bridge Design. It is composed of five units. These are the Bridge Design and Review Unit; the Bridge Design and Construction Review Unit; the Policy, Standards and Specifications Unit; the Construction Liaison Unit; and the Shop Drawings and Steel Fabrication Inspection Unit. The Bridge Design Section is responsible for the design and preparation of bridge and structure plans for the Department; and the initiation, development and dissemination of design policies, procedures and structural theories to be used in the selection, proportioning, and detailing of members and components employed in any bridge or structure type on Illinois' highway system. In addition, it is responsible for the development of specifications and Special Provisions for all materials and procedures as they relate to the use and application in bridges and structures; the preparation of bridge and structure estimates of cost and time; the evaluation and utilization of new structure types, products, techniques and materials; and the resolution of bridge and structure construction problems. The Design Section is also responsible for the review and approval of Shop plans as well as steel fabrication inspections.

1.2.3.1 Policy, Standards and Specifications Unit

Under the supervision of the Unit Chief, this unit develops and maintains all bridge and structure design policies including design manuals, standard plans, and seismic design procedures. In addition; the unit analyzes, reviews and develops standards for special structures, highway appurtenances, and specialized design and construction concepts developed by outside agencies. It designs new specialized structure components utilized by the Bridge Design and Review Groups in structural plan preparation; seeks out, evaluates and develops policy and guidelines for implementation of new design and construction techniques, products and materials; monitors structure related Standard Specifications for revision of the Standard Specifications for Road and Bridge Construction; and develops the Bureau's technical programs. Technical programs include bridge and structural engineering software, and computer systems. The Unit Chief represents the Bureau on the Department's Specification Committee.

The Policy, Standards and Specifications unit also conducts final reviews which ensure compatibility of roadway and bridge plans; evaluates, develops and recommends approval of bridge Special Provisions; and prepares cost and time estimates for new bridge designs, products or construction methods.

1.2.3.2 Bridge Design & Review Units

Under the supervision of the Unit Chiefs, each unit performs the analysis and evaluation of structural designs; develops and prepares bridge and structural plans for use on the State Highway System; and performs the analysis, evaluation and approval of Final Contract plans for bridges and structures prepared for the Department or Local Agencies by outside consultants. Design & Review Units also evaluate and study construction problems and develop details for corrective action, develop and implement policies and procedures for design and plan preparation by outside agencies for structures on Primary and Secondary State Highway Systems, and conduct performance evaluations of consultant prepared plans. Additionally, the Computer Aided Design Group is supervised by one of the Design & Review Unit Chiefs.

1.2.3.3 Construction Liaison Unit

Under the supervision of the Unit Chief, this unit assists the Bridge Design & Review Units, the Shop Drawing & Steel Fabrication Inspection Unit, and the Policy, Standards and Specifications Unit on special matters related to construction, fabrication and policy.

1.2.3.4 Shop Drawings & Steel Fabrication Inspection Unit

Under the supervision of the Unit Chief, this unit is responsible for the review and approval of Shop Drawings covering steel, aluminum, and prestressed concrete elements for bridge and sign structures as well as structural evaluation of Shop Drawings for precast box culverts, three sided precast concrete structures and noise walls. The unit provides shop quality assurance services during the fabrication, painting and non-destructive testing of structural steel bridge components and aluminum sign structures. The unit also acts as adviser in matters associated with fabricating and non-destructive testing of steel and aluminum. In addition, it is responsible for the development and maintenance of the Sign Structures Manual which covers design policy, plan standards, inspection of sign structures, and structural evaluation of light towers and other special traffic structures.

1.2.4 Structural Services Section

This Section is under the direct supervision of the Engineer of Structural Services and is composed of three units which are responsible for the structural investigations of existing bridges, the development or review of repair plans, determination of bridge load-carrying capacity, establishment of posted weight limits, evaluation of overweight permit vehicle movements, maintenance of bridge plan archives, and review and approval of Local Agency bridge construction projects. These units, acting together, provide oversight of the bridge inspection procedures utilized by the Department and Local Agencies to ensure bridge safety as required by the National Bridge Inspection Standards provided in Title 23 of the Code of Federal Regulations, Part 650.301.

1.2.4.1 Bridge Investigations and Repair Plans Unit

Under the supervision of the Unit Chief, this unit performs field investigations to identify the cause or extent of structural deficiencies, develops repair alternatives, and prepares plans to eliminate

deficiencies related to the deterioration of structural members or accidental damage. Field investigations performed by the unit also include those to evaluate reoccurring deficiencies associated with standard structural detailing practices to identify the elements contributing to the deficiencies and to offer solutions. The unit provides guidance to Department personnel, consulting engineers and other agencies engaged in the development of repair or maintenance projects, and this guidance is provided on a project specific basis and through the maintenance and updating of information contained in the Repair Section of the Structural Services Manual, for which the unit is responsible. Repair, maintenance and minor bridge rehabilitation projects prepared by Department personnel or consulting engineers are reviewed by the unit for comment and approval prior to being accepted for advertisement as a contract for letting. The unit also provides assistance to Department implementation personnel as required to resolve construction issues during the implementation of the projects reviewed or prepared by the unit. An inventory of Contract plans and As-Built plans is actively maintained by the unit for all bridges directly under State jurisdiction for reference during bridge maintenance, repair or rehabilitation projects. In order to comply with Federal Regulations and to ensure that the Department obtains a proportional share of Federal funds, the unit tracks and assembles bridge construction cost information for submittal to the Federal Highway Administration. For additional information related to unit procedures, the Repair Section of the Structural Services Manual should be referenced.

1.2.4.2 Local Bridge Unit

Under the supervision of the Unit Chief, this unit provides administrative and technical expertise to Local Agencies concerning local bridge matters and assists the Bureau of Local Roads and Streets during the development of policies and procedures for Local Agency bridges. All Local Agency bridge rehabilitation and replacement projects utilizing Federal, State or motor fuel tax funds, and other local projects requiring Department approval by State Statutes, are reviewed by the unit during project development to the degree necessary to ensure structural adequacy and compliance with Department policies and procedures. As part of the project review as necessary, the unit provides coordination with the Department of Natural Resources, using information received from the Local Agency, to obtain approvals for local bridge projects to proceed to letting. The unit provides services to Counties, as required by State Statute, leading to the development of Contract plans for bridge construction.

Unit personnel conduct field inspections and perform analyses to determine the load-carrying capacity of existing bridges in response to Local Agency requests or to address changes in bridge conditions routinely reported by Local Agency inspection staff. The unit establishes weight limits

to be enforced for Local Agency bridges to ensure highway safety and assists agencies in developing repairs to improve the condition of Local Agency bridges or to avoid the implementation of weight limits. Local Agencies coordinate, as necessary, with the unit to resolve construction issues and to evaluate permit requests for overweight vehicles. The unit, in cooperation with the Bureau of Local Roads and Streets, provides bridge inspection, bridge repair, and structural database utilization training to Local Agency and consulting engineer personnel. Oversight of Local Agency activities related to the performance of bridge safety inspections, as required by the National Bridge Inspection Standards, is provided by the unit, with the Unit Chief functioning as a Program Manager on behalf of the Department for Local Agency bridge inspection related issues. Unit personnel assist the Office of Planning and Programming during the maintenance and updating of the Structure Information and Procedure Manual to ensure compliance with the bridge safety and inventory provisions of the National Bridge Inspection Standards for Local Agency bridges. For additional information related to unit procedures, the Bureau of Local Roads and Streets Manual should be referenced.

1.2.4.3 Structural Ratings and Permits Unit

Under the supervision of the Unit Chief, this unit performs analysis and evaluations to determine the load-carrying capacity of new and existing bridges under State jurisdiction, as required by State Statute and Federal Regulations. When necessary, unit personnel perform field inspections of severely damaged or deteriorated bridges to obtain information regarding essential bridge elements for use in evaluating load-carrying capacity. When necessary to address existing structural conditions, the unit issues directives to place weight restrictions on existing bridges under State jurisdiction to ensure highway safety. The unit works cooperatively with the other units of the Structural Services Section for identifying repair alternatives to eliminate deficiencies that would otherwise require the implementation of a weight restriction. The Bureau of Operations routinely coordinates the review of overweight permit requests with the unit prior to authorizing the movement of overweight vehicles to ensure that highway infrastructure is not damaged. In order to ensure that bridge load-carrying capacities can be determined in an expeditious manner, the unit maintains databases of structural information for use during the evaluation of overweight permit vehicle movements or the effect of damage or deterioration on bridge load-carrying capacity. The movement of heavy construction equipment across existing bridges to facilitate construction projects is evaluated by this unit, as well as the feasibility of placing additional wearing surface on existing bridges located within the limits of roadway resurfacing projects. The unit reviews proposed legislative changes to the Illinois Vehicle Code to determine the effect of

the changes on highway system bridges, and provides coordination with other Units and Bureaus for developing comments in regard to anticipated effects. Unit personnel assist the Office of Planning and Programming during the maintenance and updating of the Structure Information and Procedure Manual to ensure compliance with the bridge safety and inventory provisions of the National Bridge Inspection Standards, and represents the Department in matters pertaining to the maintenance, revision or updating of bridge rating specifications that may be proposed by the American Association of State Highway and Transportation Officials (AASHTO).

1.3 Preparation of Bridge and Structure Plans

The preparation of all State bridge plans is initiated by the submittal of the Structure Report and Bridge Condition Report and, where applicable, the Hydraulic Report. The information contained in these reports is the basis upon which the structure is hydraulically and geometrically proportioned. Sufficient data shall be furnished to fully delineate all field conditions. Particular care shall be taken to supply complete information on existing structures which are to be incorporated into the plans. It shall be assumed that authority to proceed with subsurface investigations and preparation of the Structure Geotechnical Report (SGR) is given once the Bridge Condition Report is approved. The subsurface investigation results and SGR shall then be submitted to the BBS with consultant prepared TSL plans.

From the data furnished in the Structure, Bridge Condition, Hydraulic and Structure Geotechnical Reports, the Type, Size & Location Plan (TSL) is prepared. This plan shows the general plan and elevation of the structure and general descriptions and treatments of the basic components. It is employed as an exhibit for presentation to the Regional Engineer and to other agencies for their concurrence in relation to overall features of the structure. The data necessary for all approvals shall be included. In addition to the Regional and District Offices, agencies whose approvals are required, when applicable, include the U.S. Department of Transportation, the Federal Highway Administration, the Illinois Department of Natural Resources, the U.S. Army Corp of Engineers, railroads, utilities, and the U.S. Coast Guard (when navigable streams are affected). After all the necessary approvals contributing to TSL plan development have been received, detailed design and preparation of the Final plan is initiated.

The Final Design plans constitute the single most important document necessary for the construction of structures. The Final plans should agree with the approved TSL plan in all details as well as the SGR. If it is found necessary to deviate from the TSL plan during design, prior approval shall be obtained from the Engineer of Bridges and Structures before such change can

be incorporated. Since any deviation could involve concurrence by other applicable agencies, sufficient time shall be allowed for processing.

After the Final plans are completed, they are submitted to the Engineer of Bridges and Structures for approval and signature to denote acceptance of the plans. The plans are then stored until placed on contract. During this time, if policy changes dictate, the plans may be updated when practical or necessary in accordance with current design policy and then will be transmitted to the Project Development and Implementation Section of the Bureau of Design and Environment for contract processing.

The process for preparation of preliminary submittal and Final plans for Local Agency structures is similar, and submittals are processed through the Bureau of Local Roads and Streets to the Local Bridge Unit. See the Bureau of Local Roads and Streets Manual for guidelines.

1.4 Consulting Engineers

Consulting engineers are retained by the Division of Highways for the design of bridges and other structures when the plan production capacity of the Bureau of Bridges and Structures requires supplementing. The consultant shall be prepared to undertake all of the necessary tasks required for the production of the Final plans as per the standard of practice and in conformance with the policies and requirements of the Department. These tasks include: field site investigation, preparation of the Structure Report, preparation of the Bridge Condition Report, hydraulic survey and preparation of the Hydraulic Report, subsurface investigation and preparation of the Structure Geotechnical Report, economic studies, bridge and wall type selection studies, preparation of the TSL and Final plans, and Shop plan review. During the construction phase of the project, it shall be the consultant's responsibility to interpret the plans and undertake correction of any construction difficulties resulting from Design plan errors or inconsistencies.

Included in this manual are guidelines and requirements to assist consultants in the development of the TSL and Final plans. Adherence to these guidelines will help to facilitate expeditious review and approval of plans, and minimize last minute changes and delays. The guidelines are presented in the following manner:

1. Checklist for preparation of TSL Plans (See Section 2.3.13)
2. Plan Development Outline Guidelines (See Section 1.4.1)

3. Checklist for use in the Final Plan Preparation (See Section 3.1.13)

Structure plans prepared by design consultants for the Department shall be approved by the Engineer of Bridges and Structures prior to letting for construction. To accomplish this, the Bureau of Bridges and Structures requires specific submittals for review and approval. These submittals include a Plan Development Outline, Final Structure plans for structural review and approval, and the Final plans and Specifications for letting.

1.4.1 Plan Development Outline

In order to facilitate a more efficient and timely review and approval of Final plans, a "Plan Development Outline" (PDO) shall be prepared and submitted for each project involving a State structure. (PDO's are not required in the plan development for Local Agency structures.) This outline shall be submitted directly to the Bureau of Bridges and Structures prior to the commencement of Final plans. Figure 1.4.1-1 gives an example format for a "Plan Development Outline" which should be followed. The listed items in the figure are considered the minimum required by the Department.

After reviewing the PDO, the Department will decide either (a) to have a meeting with the design consultant for an "Interim Plan-Review" or (b) to notify with comments, if any, the consultant to proceed with the finalization of the plans without a meeting. At this time, the consultant will be informed of the name and phone number of a contact person within the Bureau of Bridges and Structures. Even if an interim review is made by the Bureau of Bridges and Structures, it is the responsibility of the consultant to submit Final plans which are 100% complete, devoid of errors, and sealed by an Illinois Licensed Structural Engineer. Errors not discussed or commented on by the Department shall be the sole responsibility of the consultant.

1. **Project Data:** [Provide cover sheet with easily identifiable project data.]

Plan Development Outline
for
[Route]
[Feature Carried and Crossed]
[Section #]
[County]
[Structure #]
[Contract #]
[IDOT Job D#]
[Scheduled Letting Date]

Prepared by: [Consultant Co. Name]
[Current Date]

2. **Procedures for Quality Control and Quality Assurance:** [Brief description of the consultant's procedures for quality control and assurance including the names of the project coordinator, QC/QA reviewer, and structural engineer sealing the Final Structure plans.]
3. **Project Description:** [Brief description of the structure project including the structure type, location, staging, and major items of the project scope-of-work.]
4. **Scope of Services:** [Brief description of the scope of services to be provided by the consultant including BCR and TSL preparation, structural design and Final plan preparation, services as a sub-consultant to (prime consultant), and fabrication Shop plan review.]
5. **Schedule:** [Brief outline of proposed schedule for the submittal of Final plans for review and PS&E submittal.]
6. **Analysis and Design Procedures:** [Brief outline of proposed methods of analysis.]
7. **Special Checks:** [Brief description of special checks that will be needed such as: fatigue analysis, seismic, ice loads, curved girder analysis, etc.]
8. **Constructibility:** [Discussion of any issues regarding constructibility including: erection, deck pour sequence, staging, etc.]
9. **Non-Conventional Details:** [Note any non-conventional details or concerns that need to be addressed.]
10. **Foundations:** [Final assessment of foundation treatment based on the Structure Geotechnical Report.]
11. **Preliminary List of Pay Items:** [List all anticipated structure pay items with units.]
12. **Preliminary List of Plan Sheets:** [List all anticipated Structure plan sheets with brief description of contents and Base Sheet designations.]
13. **Preliminary List of General Notes:** [List all anticipated Structure plan general notes.]
14. **Special Provisions:** [List all structure Special Provisions necessary along with applicable Guide Bridge Special Provisions (GBSP's).]
15. **TSL:** [Include and 8 ½ in. by 11 in. copy of the TSL.]

Figure 1.4.1-1

1.4.1.1 "Interim Plan-Review" Meeting Requirements

The consultant engineer responsible for sealing the plans may be required to attend a meeting in the Central Office with personnel from the Bridge Design Section of the Bureau of Bridges and Structures. After receiving comments on the “Plan Development Outline” document, the consultant shall schedule a mutually acceptable date for this meeting as required. The consultant shall respond within 10 calendar days of the first notification date to set the "Interim Plan-Review" meeting date. The following items, at a minimum, should be made available to facilitate discussions:

1. In-progress design computations. These will be returned at the end of the meeting.
2. Copies of all completed or in-progress sheets appearing in the final submittal should be presented. These sheets should not be copies of altered sheets from other projects. Outlines for all sheets that are not completed should be presented.
3. Special Provisions where needed.
4. List of any specific problems that the consultant is facing or anticipates.

1.4.2 Quality Verification Statement

A Quality Verification Statement and requested documentation (Figure 1.4.2-1) shall be completed by the consultant and shall accompany all “Final Structure Plans” for State projects. “Final Structure Plans” are defined as the first submittal of the Structure Contract plans, including Special Provisions, to the Bureau of Bridges and Structures for review.

The Quality Verification Statement attests that the plans prepared by consultants are completed by the firm and checked prior to first submittal to the Bureau of Bridges and Structures. It is intended to emphasize that the responsibility for ensuring plan quality rests with the consulting firm, and to give the Bureau of Bridges and Structures a confidence level that the firm has completed all the necessary work for a structurally safe, cost efficient, and well-detailed structure conforming to Department requirements and policies.

As a minimum, the Bureau of Bridges and Structures will review the Plan Development Outline, perform a rating analysis of the main load-carrying members for capacity verification purposes only, and review the pay items, notes, and Special Provisions for bidability. Some projects will be further reviewed for structural adequacy (splices, shear studs, bearings, substructure units, etc.) and adequate detailing at the discretion of the Bureau of Bridges and Structures.

Since the review and processing of Local Agency (LA) bridge projects varies from project to project, the Quality Verification Statement will not be required for most LA projects. The Quality Verification Statement will not be required for LA projects when the bridge plans are to be accepted by the Department based upon certification in accordance with the Bureau of Local Roads and Streets (BLR&S) Manual Section 11-7.03.1, or Section 23-7.02.1 for Federal Aid Projects. The Quality Verification Statement shall be submitted with bridge plans for LA projects that cannot be accepted based on certification, and that will therefore be reviewed by the Bureau of Bridges and Structures prior to acceptance by the Department.

The QC/QA review shall be completed by an Illinois Licensed Structural Engineer and should not be the same engineer as the designer or checker.

BBS 2750 is the quality verification statement.

Quality Verification Statement

"The Final Plans for SN_____ have been completed in accordance with the Plan Development Outline and are submitted for review. The signatures given below indicate that all phases of design, checking, and the firm's quality control and assurance plan have been completed. Such considerations as bidability and constructability have also been completed for this project. Attached to the Quality Verification Statement is documentation annotating comments from all independent QC/QA reviews and a disposition of those comments to the satisfaction of the project team."

_____

QC/QA Review Date

_____

Figure 1.4.2-1

Section 2 Planning

2.1 General Planning Process

2.1.1 Goal

The bridge and structure planning process encompasses the evaluation of site information, the application of established policies and practices, the consideration of the alternates and their respective economic evaluations for the purpose of establishing the bridge or structure configuration which is the most appropriate based on cost, safety and function (i.e. hydraulic, geotechnical, geometric, structural and aesthetic).

The Planning Section of the Bridge Manual is a guide and control for the preparation of Bridge Condition Reports (BCR), Structure Geotechnical Reports (SGR), Hydraulic Reports, and Type, Size and Location Plans (TSL), and for the dissemination of policy interpretations. Many of the controls and guides for the proper development of BCR's, SGR's and TSL Plans are found in documents issued by other Bureaus. As such, the Planning Section of the Bridge Manual also serves as a source manual for ready reference in locating the appropriate planning policies.

2.1.2 Bridge and Structure Specifications

The AASHTO LRFD Bridge Design Specifications and the AASHTO Standard Specifications for Highway Bridges are the two primary design codes currently being utilized by the Department. The design specification for a particular project shall be clearly indicated on the TSL plan and other pertinent planning documents. Reference is made to Table 2.1.2-1 which states the appropriate design specifications for a given project type. Any deviations will require written approval from the Engineer of Bridges and Structures. See Section 1.1.1 for additional information. The level of seismic retrofitting required for a bridge which is either undergoing reconstruction or rehabilitation varies. See Section 2.3.10.

Structural Design Specification Selection Table	
New or Complete Replacement Structure Projects	
All Structure Types	AASHTO LRFD Bridge Design Specifications
Structure Reconstruction Projects (e.g. Minimum Superstructure Replacement)	
Existing ASD or LFD Designs	AASHTO LRFD Bridge Design Specifications
Existing LRFD Designs	AASHTO LRFD Bridge Design Specifications
Structure Rehabilitation Projects (e.g. Re -Deckings , Widenings and Extensions)	
Existing ASD or LFD Designs	AASHTO Standard Specifications for Highway Bridges
Existing LRFD Designs	AASHTO LRFD Bridge Design Specifications

Table 2.1.2-1

2.1.3 Context Sensitive Solutions

Context Sensitive Solutions (CSS) is an interdisciplinary approach that seeks effective multimodal transportation solutions by working with stakeholders to develop, build and maintain cost effective transportation facilities which fit into and reflect a project's surroundings – its "context".

The Bureau of Design and Environment Departmental Policy-21 (D&E-21) contains guidelines and polices for implementation of CSS on highway and structure projects. Detailed guidelines for practice of CSS can be found on the IDOT web site at the following linkhttp://www.idot.illinois.gov/Assets/uploads/files/Transportation-System/Pamphlets-&-Brochures/CSS/Context%20Sensitive%20Solutions%20(CSS)%20-%20Detailed%20Guidelines%20for%20Practice.pdf Contact the District if a decision has been made on a particular project to implement the CSS process.

2.1.4 Structure Types

There are several main types of structures which require the Bureau of Bridges and Structures' (BBS) involvement and approval. These are:

1. Bridges
2. Multiple Barrel Box Culverts
    a. Cast-In-Place
    b. Precast
3. 3-Sided Precast Concrete Structures
4. Retaining Walls

All new structures generally require a TSL. Structures which require varying degrees of repair or rehabilitation (scope-of-work) may or may not require a TSL. See Section 2.3.2 for details.

2.1.5 Planning Tasks

There are several primary tasks involved in the planning process of a bridge or structure. Each contains a number of detailed requirements. Responsibility for completing individual tasks falls to either an IDOT District Office, a consultant hired by the Department, or the Bureau of Bridges and Structures in various combinations. The following gives a general overview:

The main tasks that control the planning process are as follows:

1. Bridge Condition Report
2. Type, Size and Location Plan
3. Hydraulic Report
4. Structure Geotechnical Report
5. Utility Attachment

Additional BBS Planning Section input provided to the Districts or the Bureau of Design and Environment (BDE) are:

1. Consultant Man Hour Evaluation
2. Consultant Prequalification
3. Project Programming

2.1.5.1 Bridge Condition Report (BCR)

Bridge Condition Reports are intended to provide a format for Districts to document a proposed scope-of-work for an existing structure to the Bureau of Bridges and Structures. A BCR may be completed by District Personnel or a consultant hired by the Department. The BCR provides clear documented communication between the Bureau of Bridges and Structures and the Districts or its consultants.

The BCR documents a bridge or structure's current physical condition and functionality. It also addresses structural and safety deficiencies, and finally proposes a scope-of-work. All pertinent information which is required to support the proposed scope-of-work is contained in a BCR.

A complete guide to compiling a BCR can be found in the IDOT document "Bridge Condition Report Procedures and Practices" available online. Requirements for BCR's for Local Agency projects are similar, and follow the requirements of Sections 10-2.03(a) and 22-2.06(a) of the Bureau of Local Roads and Streets Manual. See also Section 2.2 for further discussion of BCR's.

2.1.5.2 Type Size and Location Plan

The Type Size and Location (TSL) plan forms the basis for Contract plan preparation which is used for construction of the structure. TSL's are also used to obtain an agreement between a District or its consultant and the BBS along with other applicable parties such as railroads, the Federal Highway Administration (FHWA), the US Coast Guard (USCG), the Illinois Department of Natural Resources (IDNR), the Army Corp of Engineers, the Illinois Historic Preservation Agency (IHPA), municipalities and private developers. Additional approval process information is given in Section 2.3.15.

Bridge or structure type, size and location are established under the principles of overall project economy and safety and are subject to the various site factors and conditions unique to a project. Consequently, detailed structure configurations are based upon comprehensive geometric, hydraulic, geotechnical, structural, aesthetic and economic analyses.

Guidelines and policies for preparing TSL plans are given in Section 2.3, and sample TSL plans are presented in Section 2.3.14.

Requirements for TSL submittals for Local Agency projects are similar to those for State projects, and follow the requirements of Section 10-2.03(b) and 22-2.06(b) of the Bureau of Local Roads and Streets Manual.

2.1.5.3 Structure Geotechnical Report and Hydraulic Report

The Structure Geotechnical Report provides the engineers responsible for development of the TSL and the Design plans with the geotechnical information and recommendations needed to plan and design the foundations for a specific structure. See Sections 2.3.4.3 and 2.3.6.3 along with the IDOT Geotechnical Manual for more information and guidance on developing and compiling SGR's.

The Hydraulic Report plays an important role in determining the scope of a project. Hydraulic issues, such as scour, estimated water surface elevations and the waterway information table are also addressed in the Hydraulic Report. See Sections 2.2.4 and 2.3.4.2 along with the IDOT Drainage Manual for more information and guidance on developing and compiling Hydraulic Reports.

2.1.5.4 Consultant Man Hour Evaluations

Consultant man hour estimates for BCR's are at the discretion of the Districts. The BBS will be available for assistance upon request.

There are two options for which the BBS can have involvement in consultant man hour estimates for TSL plans and Structure plans. These are:

Option 1: If a time constraint is given to have an agreement signed, a District can request the BBS to provide an independent estimate prior to the selection of a consultant by the Department through the Professional Transportation Bulletin (PTB) selection process. This option allows the Districts to negotiate directly with the consultant in a timely manner for a set of agreed upon man hours. The BBS may be contacted during the negotiation phase to help resolve any questions. The District is asked to send the original consultant estimate to the BBS prior to negotiation in order to keep BBS records current.

Option 2: If a District sends a consultant estimate to the BBS for review and comment, the BBS will perform an independent estimate. Comparisons will be made with previous projects to ensure similar scopes-of-work were assumed. The BBS will then forward its recommended estimate to the District. The District negotiates and discusses any discrepancies with the consultant in order

to arrive at an agreed upon set of man hours. The BBS may be contacted during this negotiation phase to help resolve any questions.

Additional notes that may apply to the two options above are:

1. Estimates for the Structure Geotechnical Report should be coordinated through the District Geotechnical Engineer. The BBS Foundations and Geotechnical Unit may be contacted for assistance.
2. QC/QA, and Management and Administration estimates are related to the entire project and therefore should be reviewed by the District.
3. Estimates should be separated into specific tasks. I.e. TSL plan, PDO, Structure plan, Shop Drawings, etc. Structure plan estimates should include an itemized breakdown.
4. It may be necessary to defer the Structure plan estimate until after the TSL plan is approved and the structure type (or scope-of-work) is more clearly defined. Structure plan estimates are then negotiated as a supplement.

2.1.5.5 Utility Attachments

Utility attachments to bridges and structures require approval from the Regional Engineer. Applications for a permit are then submitted to the Central Bureau of Operations for review of compliance with policy and method of attachment. Utility companies who wish to attach their facilities to traffic structures under the jurisdiction of the Division of Highways are subject to assessment charges. If the Central Bureau of Operation approves the method of attachment, the BBS Planning Section will conduct a structural feasibility analysis and compute the assessment charge. Guidelines and policies for utility attachment to structures are given in Section 2.5.

2.1.6 Responsibilities

2.1.6.1 District

The District is responsible for providing Bridge Condition Reports (BCR) and Structure Geotechnical Reports (SGR) to the BBS for review and approval. The District reviews TSL plans for conformance within various Bureaus, and agreement with the Project Report, the development of the Roadway plans and other non-structural project requirements. In addition, the District is responsible for directing and supervising work and man hours performed by its consultants which include those that compile Structure Geotechnical and Hydraulic Reports (with guidance from the BBS as needed).

2.1.6.2 Consultant

Consultants may be hired by the Department to help the District compile Bridge Condition Reports, Hydraulic Reports and Structure Geotechnical Reports and/or to develop Type Size and Location plans. In addition to specific guidance provided by the Districts, consultants are required to follow the policies and procedures of relevant IDOT documents as well as the appropriate AASHTO or AREMA Design Specifications. In particular, a consultant should rely on the guidelines and polices referenced in Section 2.1.7 and this manual.

2.1.6.3 Bureau of Bridges and Structures Planning Section

Overall, the Bureau of Bridges and Structures Planning Section responsibilities vary from production to oversight and guidance. The BBS Planning Section can be called upon by the Districts to develop a TSL plan. See Section 2.3.15.1 for a more detailed TSL plan development process. The BBS Planning Section provides oversight and approval authority on all BCR's and consultant TSL plans submitted by the Districts. Approvals or rejections are documented by memorandum with recommendations/revisions as required. See Section 2.3.15.2 for a more detailed TSL plan approval process. The Foundations and Geotechnical Unit of the BBS reviews and approves all SGR's and compiles them for in-house projects. The Hydraulics Unit of the BBS reviews and approves Hydraulic Reports and compiles them for in-house projects. The BBS Planning Section is available upon request for guidance and interpretation of various design specifications and Departmental policies and procedures.

2.1.7 Reference Manuals

In addition to this manual, the AASHTO "LRFD Bridge Design Specifications" and the AASHTO "Standard Specifications for Highway Bridges - Division I & IA", familiarity with the following manuals and documents is necessary to properly develop a BCR, SGR, Hydraulic Report, and TSL plan for a structure over which the State has review authority:

1. Bridge Condition Report Procedures and Practices – Bureau of Bridges and Structures
2. Geotechnical Manual – Bureau of Bridges and Structures
3. Drainage Manual – Bureau of Bridges and Structures
4. Culvert Manual – Bureau of Bridges and Structures
5. Standard Specifications for Road and Bridge Construction (Including most recent Supplemental Specifications and Recurring Special Provisions) – Bureau of Design and Environment
6. Bureau of Design and Environment Manual – Bureau of Design and Environment
7. Highway Standards Manual – Bureau of Design and Environment
8. Bureau of Local Roads and Streets Manual – Bureau of Local Roads and Streets
9. Memoranda to All Regional Engineers – Bureau of Design and Environment
10. Memoranda to All Bridge Designers (ABD) – Bureau of Bridges and Structures
11. Memoranda to All Geotechnical Manual Users (AGMU) – Bureau of Bridges and Structures
12. FWHA Retrofitting Manual for Highway Bridges
13. AREMA Manual for Railway Engineering
14. AASHTO Guide Specification for Bridge Railings
15. AASHTO Policy on Geometric Design of Highways and Streets
16. AASHTO Guide Specification for Fatigue Evaluation of Existing Steel Bridges
17. AASHTO Guide for the Development of Bicycle Facilities
18. AASHTO Guide Specifications for Horizontally Curved Steel Girder Highway Bridges, 2003
19. NCHRP 341 Guidelines for the Use of Weathered Steel
20. AASHTO Guide Specifications for LRFD Seismic Bridge Design
21. AASHTO Roadside Design Guide

These reference materials form the basic criteria which control all BCR's, SGR's, Hydraulic Reports and TSL plans prepared for the State. With the exception of the documents published

by AASHTO, AREMA, NCHRP and FHWA, the references above can all be obtained from the issuing Bureau or from the IDOT web site at: http://www.idot.illinois.gov/doing-business/index

An "exception to policy" shall be secured from the appropriate Bureau before any design or detail outside the guides and controls of the referenced policy manuals may be utilized on any TSL plan.

2.2 Bridge Condition Reports

2.2.1 Definition

A Bridge Condition Report (BCR) is required for every structure within a roadway section covered by a Project Report or is the subject of a Project Report by itself. The purpose of a Bridge Condition Report is to establish a scope-of-work with regard to the extent of repair, replacement (partial or total), widening or other improvements. The BCR allows the Bureau of Bridges and Structures to determine the most cost effective method for correcting reported structural, geometric or hydraulic deficiencies which restores a bridge to a structurally adequate and functionally serviceable condition. The BCR, which contains a comprehensive recommendation for the proposed scope-of-work, along with supporting information shall be submitted by the District to the Bureau of Bridges and Structures for review and concurrence. After concurrence is obtained, the approval memorandum issued by the BBS shall be incorporated into the Project Report.

A complete guide to compiling a BCR can be found in the IDOT document "Bridge Condition Report Procedures and Practices" available online (Primary BBS Documents Web Page address is: http://www.idot.illinois.gov/home/resources/Manuals/Manuals-and-Guides and Chapter 39 of the Bureau of Design and Environment Manual. Requirements for BCR's for Local Agency structures are similar, and follow the requirements of Sections 10-2.03(a) and 22-2.06(a) of the Bureau of Local Roads and Streets Manual.

2.2.2 BCR Types

There are several possible formats for a BCR. Each require varying degrees of detail for how information is reported as well as how much. Generally, as the scope of proposed work increases, so does the length of the BCR for a particular structure. The possible formats or types of BCR's are briefly described below.

2.2.2.1 Bridge Condition Report

The format of the Bridge Condition Report is an extensive and detailed description of a structure. It allows the Bureau of Bridges and Structures to make correct structural, economic and policy decisions for the cost effective expenditure of bridge rehabilitation funds. Therefore, the BCR shall provide:

1. A description of the physical conditions and deficiencies that mandate repair or replacement.
2. A verification of the apparent soundness of any substructure elements recommended for reuse along with the economic advantage gained by their reuse.
3. A statement of any geometric or hydraulic improvement required.
4. A recommendation for the proposed scope-of-work.
5. A statement regarding the maintenance of traffic during the rehabilitation.
6. A Proposed Structure Sketch. If the recommended scope-of-work is total replacement, it should address the approximate dimensions of a replacement structure, but not so precisely that configuration refinements resulting from subsequent hydraulic, soils, structural, or economic studies are restricted.

2.2.2.2 Abbreviated Bridge Condition Report

An Abbreviated Bridge Condition Report is the shortened version of a BCR in which the scope-of-work is minor or no work is planned. This is intended to minimize the effort required by the Districts to complete, process and approve these types of projects while also ensuring adequate documentation and analysis of the proposed work. Structures that meet the Abbreviated Bridge Condition Report Requirements are B-SMART bridge deck repair projects and bridge rehabilitation projects such as bridge rail retrofit, transverse or longitudinal joint work, minor beam repairs and minor substructure repairs which are not Contract Maintenance Projects.

2.2.2.3 ISIS Master Report

For structures to be gapped (allowed to remain in place) within a 3R type highway project, a memorandum outlining the District's intent to do very minor work or no work along with attaching the Illinois Structure Information System (ISIS) Master Report (R107) and the most recent PONTIS inspection report will suffice as documentation.

2.2.2.4 Bridge Condition Report Not Required

SMART and 3P projects do not require submittal of a BCR. However, if a structure lies within the limits of these type projects, coordination shall be initiated with the Bureau of Bridges and Structures before determining resurfacing options across the bridge. Bridge Repair Projects financed by maintenance funds are not evaluated by the Bureau of Bridges and Structures unless specifically requested by the District.

2.2.3 BCR Content

2.2.3.1 Bridge Inspection and Documentation

Since the BCR is the vehicle by which the scope-of-work to be performed is defined, it is imperative that the information presented be as thorough and detailed as possible. This allows for an accurate and in-depth evaluation of the scope-of-work recommendations. Of particular concern is the physical condition of all elements to be retained for reuse in a rehabilitation project. All potential problems such as scour, shifted or frozen bearings, out-of-plumb elements, substructure movements, deterioration, anticipated vertical or horizontal alignment changes, and structurally significant cracks should be reported and accompanied by explanatory sketches and photographs to aid the evaluation of the recommended scope-of-work. Colored photographs and properly scaled drawings are valuable tools which provide a permanent record of the conditions existing at the time of inspection and are of great use in evaluating the suitability of reusing specific structural elements. The photographs and sketches should be of sufficient number to cover all appropriate areas of the structure.

2.2.3.2 Delamination Surveys

Delamination surveys for bridge decks are usually conducted when it is unclear if the level of deterioration dictates deck repair or replacement. Decks which have a small area, are beyond repair by visual inspection, are functionally obsolete, or exhibit little or no deterioration generally do not warrant a delamination survey. Since some delamination surveys may interpret the debonding of wearing surfaces as delaminations, the surveys should be closely coordinated with both the top and bottom of deck inspections to aid in estimating areas of deck delaminations. There are several test methods and procedures to choose from when conducting a delamination survey.

2.2.3.3 Bridge Condition and Geometric Analysis

There are various geometries related to a bridge or structure which should be analyzed, evaluated and documented along with the structure itself. The roadway geometrics, for which a bridge is a small part, as well as the roadways passing under the structure should be evaluated for conformance with Departmental policies. Vertical and horizontal clearances underneath the superstructure, and clear width of the deck itself should also be reviewed for conformance with Departmental policies.

Structural adequacy and condition of the deck, superstructure and substructure elements should also be analyzed, evaluated and documented. Reuse of bridge elements such as primary beams generally depends upon their rated load capacity. Generally, an HS-20 rating or greater and a structural condition evaluation of “6” or greater are required to “do nothing” or reuse. Reuse of other bridge elements such as bearings and joints typically depend upon their condition.

The reuse of bridge components for which the original plans are not available is not recommended. Proposals of this nature will be considered only when the Bridge Survey provides complete information on the component’s soundness, make-up and dimension, and the proposed loading conditions will remain essentially unchanged.

Note that economics plays a pivotal role in all recommendations made by the engineer during the BCR process.

Detailed guidelines and requirements, as noted previously, can be found in "Bridge Condition Report Procedures and Practices". The Bridge Planning Section is also available, upon request, to assist with the evaluation of problem structures or site locations as well as to clarify current Departmental policies.

2.2.3.4 Recommendation

2.2.3.4.1 Scope-of-Work

To propose or recommend a scope-of-work for a project, a synthesis of critical information about the structure which has been collected and evaluated from the beginning of the BCR process as well as other factors is required. These critical pieces of information and factors include the structure's condition and load capacity, geometric and hydraulic acceptability, economic evaluation as well as what is termed "exterior constraints".

"Exterior constraints" is a term used to describe issues which bear directly on the feasibility of a project. These include adverse affects on traffic control, unacceptable user delay, emergency need of repair, and availability of funding.

When exterior constraints influence the scope-of-work decision, they should be thoroughly analyzed and documented.

2.2.3.4.2 Bridge Width

The proposed bridge width on a rehabilitation/reconstruction project should be addressed in the recommended scope-of-work as applicable. Required bridge width is a function of traffic, design speed, existing roadway features and the proposed roadway improvement. Urban bridge widths for rehabilitation/reconstruction projects generally match the roadway template. Detailed guidelines on required bridge widths can be found in Chapters 39, and 44 through 50 of the Bureau of Design and Environment Manual. Any exceptions to the bridge width policies require the District to submit proper justification and documentation for consideration by the Bureau of Bridges and Structures and the Bureau of Design and Environment.

As structures are an extension of the adjacent roadway, structures should, whenever possible, duplicate the accommodations made for bicyclists on the roadway. These projects should be coordinated with the District and the BDE Bicycle and Pedestrian Coordinator. Policies and procedures are given in Chapter 17 of the BDE Manual.

2.2.3.4.3 Maintenance of Traffic

When traffic is recommended to be maintained for a project, i.e. the construction is staged, it is an important aspect of the proposed scope-of-work. Lane widths, condition of the existing superstructure, structural adequacy, soil retention, etc. during each stage of construction are critical factors to evaluate. In particular, ensure that the lane used for Stage I traffic is correct and will last the duration of Stage I construction. If this is not feasible, posting the structure, providing a beam replacement contract prior to Stage I traffic, or detouring the traffic should be evaluated and determined by the District. It will not be necessary to show a detailed staging sequence in the BCR upon approving the feasibility of stage construction.

2.2.3.4.4 Proposed Structure Sketch

A “Proposed Structure Sketch” shall be included with the Bridge Condition Report as the sketch and a memorandum from the BBS approving the BCR are part of the Phase I report. Details such as railing, superstructure and substructure types need not be shown. However, the approximate structure length, pier locations (when environmental or hydraulic concerns mandate a specific location or omission), the general structure configuration (i.e., open abutment, closed abutment or culvert) and recommended structure width should be indicated. All other details, unless required to secure approval, should generally be omitted to allow the designer the necessary freedom to select the most appropriate structure design. Figure 2.2.3.4.4-1 presents an example of a Proposed Structure Sketch.

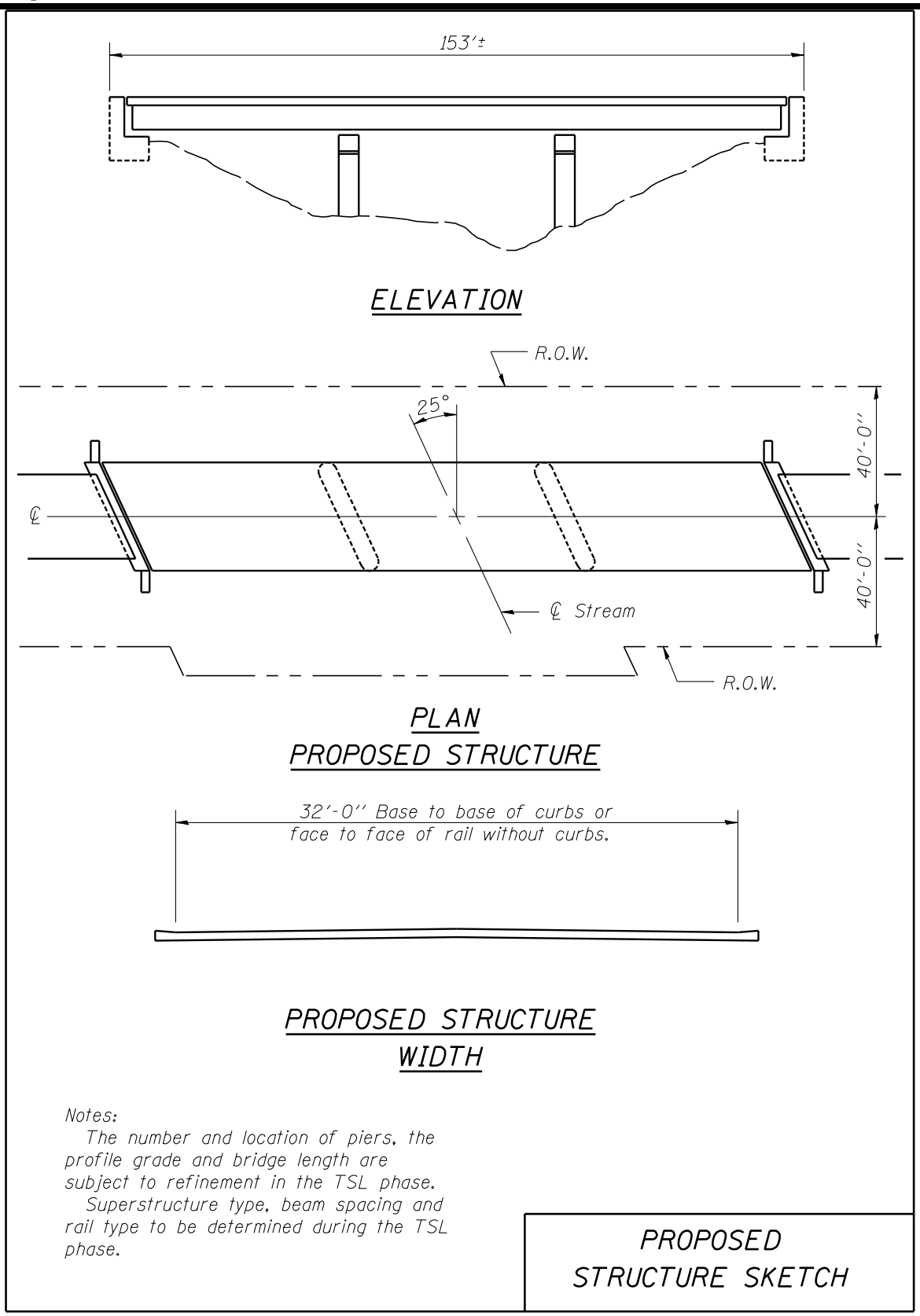

Figure 2.2.3.4.4-1

2.2.4 Hydraulic Analysis Summary

For bridges or other structures at stream crossings, the hydraulic capacity should be reviewed when appropriate. A review of any existing hydraulic capacity analysis results and records of flooding should be made, if available. Changes since initial construction in the channel location or hydraulic opening through the structure should be noted.

Where the existing vertical alignment is to be maintained and there is no history of serious hydraulic deficiencies at the location, the existing bridge waterway opening may usually be retained.

For the following cases, development of a formal Hydraulic Report is required:

1. Bridge Replacement
2. Superstructure Replacement
3. Bridge Widening Requiring Additional Substructure
4. Reductions to the Hydraulic Opening Through the Structure

Detailed guidance on writing a Hydraulic Report is available in the IDOT Drainage Manual.

2.2.5 BCR Submittals and Timelines

The BCR for a typical bridge or structure should be submitted 30 months before a project's date of letting. For complex bridges, the submittal time is increased to about 40 months. The engineer responsible for completing the BCR should take this into account when compiling a BCR. A single copy of the BCR should be submitted to the BBS unless the structure carries or crosses an interstate in which case two copies of the BCR will be required.

2.2.6 Example Bridge Condition Report Format

Example formats for completing a BCR can be found in "Bridge Condition Report Procedures and Practices".

2.3 Type Size and Location Plans

2.3.1 Introduction

Since a TSL plan is generally utilized as the General Plan sheet for the Design plans, care should be exercised in its layout and presentation. Unnecessary details, out-of-proportion drawings, and non-standard lettering should be avoided. The plan and elevation views should be presented on the same sheet to provide a clear picture of the complete structure. In addition, a section through the superstructure, a section through a pier with an expansion joint, a pier sketch and the sequence of staging should be provided, as applicable. A TSL plan can require multiple sheets because of overall length and/or complexity of the structure. Detailed dimensioning outside of that necessary to establish geometric and structural controls is not desirable; however, the engineer should make the necessary calculations and scaled sketches to assure a well proportioned and aesthetic structure.

See Section 2.1.5.2 for information on the purpose and need for a TSL plan.

2.3.2 Submittal Requirements

Generally, a TSL is required to be submitted for a project when at least some portion of the scope-of-work is structural. The cases are essentially the same as when a comprehensive BCR is required. These are:

1. Bridge Replacement
2. Bridge Reconstruction
3. Bridge Rehabilitation with at Least Some Major Work
    a. Deck Replacement
    b. Superstructure/Substructure Widening
4. Permit Projects (See Section 2.6)
5. Walls with an Exposed Height of 7 ft. or Greater
6. Multiple Barrel Culverts (Cast-In-Place)
7. Multiple Barrel Culverts (Precast) on an Interstate System
8. Three Sided Structures
9. Pedestrian Bridges
10. Pedestrian Tunnels

Cases where a TSL is typically not required to be submitted include when the scope-of-work is only:

1. Bridge Deck Repair
2. Minor Bridge Repair where an Abbreviated BCR is Only Required for Submittal
3. Bridge to Remain in Place
4. Single Box Culverts (which are covered in the Culvert Manual)
5. Walls Less Than 7 ft. of Exposed Height

2.3.3 Submittals and Timelines for TSL Plans

2.3.3.1 In-House TSL Plans

The TSL plan is initiated by the District submittal of the Structure Report (See Section 2.3.4.1) and associated attachments. For typical structures, the submittal of the Structure Report to the BBS should be 24 months prior to the project's date of letting and is increased to 27 months for complex structures.

2.3.3.2 Consultant TSL Plans

Two 11 in. x 17 in. copies of the TSL plan along with the Structure Report (See Section 2.3.4.1), Structure Geotechnical Report, and associated attachments should be submitted to the BBS by the District or by the consultant with permission from the District 15 months prior to the project's date of letting and is increased to 18 months for complex structures.

2.3.4 Preliminary Guidelines, Investigations and Reports

2.3.4.1 Structure Report

2.3.4.1.1 General

A Structure Report (BBS Form 153) shall accompany all requests to the Bureau of Bridges and Structures for a State bridge project to commence a TSL plan prepared by Department personnel, or to review and approve a TSL plan prepared by a consultant. The Structure Report is the means

of providing the Bridge Planning Section of the BBS the necessary information and documentation to properly accommodate these requests.

2.3.4.1.2 Content

The Structure Report provides for the comprehensive reporting of data pertinent to a proposed bridge/culvert/retaining wall project. These data include:

1. Project identification, location and programming
2. Highway, railroad and/or stream/river data
3. Structure Geotechnical Report and soil boring responsibility
4. Special requirements/recommendations for the composition of the structure
5. Utility accommodation, traffic handling, lighting needs and permit requirements
6. Attachments

Plans, drawings or photographs necessary to define special conditions or information, such as highway and railroad templates, plan and profile sheet(s), existing survey data, underpassing roadway and railroad profile grades and cross sections, and deck drainage calculations should be provided, if applicable, as attachments to the Structure Report. In addition, unless previously submitted, the Bridge Condition Report and Approved Waterway Information Table shall accompany the Structure Report, if applicable.

2.3.4.1.3 Preparation and Submittal

The efficiency and timeliness of the preparation and review of a TSL plan are highly contingent upon the completeness of information in the Structure Report. Therefore, all items in the report shall be appropriately addressed with non-applicable items so designated. All required attachments to the report should be provided. When filling out the Structure Report, the consultant should contact the District regarding any questions they may have.

Upon receipt by the Bridge Planning Section, the Structure Report will be reviewed for completeness of information and, if found acceptable, used as the basis for the review of a consultant TSL plan, or the initiation and subsequent development of a TSL plan and Structure Geotechnical Report by the BBS.

A sample Structure Report form is shown in Figure 2.3.4.1.3-1 and can be found at form BBS 153.

Illinois Department of Transportation

Structure Report

Marked Route/Name of Road: _____ Over: _____

Funding Route: _____ Existing Structure No.: _____

Section: _____ New Structure Number: _____

County: _____ ☐ D# or ☐ P# _____

Station: _____ Proposed Letting Date: _____

Proposed Improvement:: _____

Bench Mark: _____

RANGE PM

TWP

SECTION LOCATION MAP

RECOMMENDED STRUCTURE

Skew: _____ Spans: _____ Approx. Bridge Length: _____

BRIDGE APPROACH ROADWAY – Route: _____

Functional Class: _____ Design Speed: _____ Posted Speed: _____

ADT: _____ (20) ADT: _____ (20) ADTT: _____ (20) ☐ One way or ☐ Two Way

Directional Distribution: _____:_____ DHV: _____ (One Way)

GRADE SEPARATION – Roadway Under, Route: _____

Functional Class: _____ Design Speed: _____ Posted Speed: _____

ADT: _____ (20) ADT: _____ (20) ADTT: _____ (20) ☐ One Way or ☐ Two Way

Directional Distribution: _____:_____ DHV: _____ (One Way) Skew: _____

VIADUCT/SUBWAY – Railroad: _____

No. of Tracks: _____ Nearest Mile Post Location: _____ Skew: _____

STREAM CROSSING – Hydraulic Report Approving Agency - ☐ District ☐ Central Office Streambed Elevation: _____

GEOTECHNICAL INFORMATION:

Substructure Exploration / Soil Borings Required? _____ Information Provided by: _____

Structure Geotechnical Report Required? _____ Information Provided by: _____

ATTACHMENTS:

☐ Bridge Approach Roadway Template

☐ Plan and Profile Sheet and Cross Section for Underpassing Feature

☐ Plan and Profile Sheet for Route over Feature

☐ Approved waterway Information Table and Hydraulic Data

☐ Structure Geotechnical Report

☐ Retaining Walls: Applicable Plan and Profile Sheets and Cross Sections

SPECIAL REQUIREMENTS – Describe and attach appropriate details.

General (Configuration preferences, Slope protection, Deck drainage, Type of bridge lighting, Light pole type, Light pole height, Salvage items, etc.)

Utility Attachments: _____

Stage Construction/Temporary Bridge: _____

Printed 8/30/2006 BBS 153 (revised draft)

Figure 2.3.4.1.3-1

2.3.4.2 Hydraulic Report Coordination

The engineer responsible for development of the TSL should obtain or check the status of the Hydraulic Report at the time when the TSL is in its initial stages of formulation if the structure involves a waterway crossing. Since the Hydraulic Report is often initiated in the BCR phase, it is important that as the TSL development progresses, any structure type or length changes that would affect the waterway table, scour calculations, or other recommendations be relayed to the Hydraulics Engineer for reevaluation and possible revision. There can be special concerns regarding scour calculations that were not foreseen during the BCR phase. The final number of piers, their location, skew, stem widths, footing widths and footing elevations will effect this calculation, and thus communication between the hydraulics engineer and the engineer responsible for TSL development plays a key role. In addition to the waterway table and scour calculations, the Hydraulic Report provides the information needed to calculate estimated water surface elevations (EWSE), which are used to evaluate the need for and required height of cofferdams,and/or the need for permanent casing of drilled shafts.

2.3.4.3 Structure Geotechnical Report and Subsurface Investigation

A significant amount of geotechnical information and recommendations are required in order to select the most appropriate structure type, size and location for a project. This information is provided via the Structure Geotechnical Report (SGR). The SGR ensures that geotechnical responsibilities are properly assigned, documented, and approved in a consistent manner statewide. The SGR serves to verify that all geotechnical issues affecting a structure have been identified and taken into account by the engineer responsible for TSL development. In some cases a design phase geotechnical memo will be required to provide the design parameters and foundation treatments to be used by the structural design engineer during Final Contract plan development. Guidance and policies for preparation of SGR's are given in the All Geotechnical Manual Users Memoranda at the web site http://www.idot.illinois.gov/doing-business/procurements/engineering-architectural-professional-services/Consultants-Resources/index and in Section 2.3.6.3.

For consultant projects, as soon as a project's BCR is approved, the District should determine which individuals or parties will be responsible for the subsurface investigation and the SGR. Both decisions impact the Professional Transportation Bulletin (PTB) scope, consultant selection, man hour negotiations as well as other issues, and thus should be completed at the earliest possible

time. In general, the geotechnical responsibilities related to structures involve subsurface exploration or investigation, geotechnical analyses, and foundation design recommendations, all of which shall be contained in the final SGR or design phase geotechnical memorandum. Subsurface exploration shall be conducted by either the District Geotechnical Engineer or a geotechnical consultant. For consultant prepared TSL plans, the SGR shall be completed by the District Geotechnical Engineer, a geotechnical consultant, or the structural consultant. The BBS Foundations and Geotechnical Unit will complete the SGR for Structure plans prepared by the BBS. In all cases, the Foundations and Geotechnical Unit reviews and approves all SGR's during the BBS's process of review and approval of TSL plans.

The engineer responsible for TSL development should establish contact with the geotechnical engineer responsible for performing the subsurface investigation immediately after the District requests initiation of TSL plan preparation. Together, they should formulate an exploration and testing plan tailored to the needs of the anticipated geotechnical analyses and foundation design recommendations. A timeline which meets the expected SGR and TSL completion date should also be established. The engineer responsible for TSL development should conduct preliminary analyses in order to determine possible structure type(s). These analyses should consider existing foundations and conditions as well as anticipated foundation locations, elevations and loadings, the potential need for any new fills or cuts, and any other pertinent information. The engineer responsible for TSL development should provide all pertinent information to the geotechnical engineer to help ensure a proper and complete subsurface investigation. This information should take into account existing foundation elevations, loads and new fills/cuts. Continued coordination between the geotechnical engineer and the engineer responsible for TSL development is recommended up until actual mobilization of drilling operations to ensure that the subsurface investigation is relevant and completed to meet the TSL development schedule.

2.3.4.4 Location Study Reports

The purpose of a Location Study is to establish the alignment, develop a profile grade line, provide an environmental assessment as well as determine and address those factors affecting the socio-economic conditions and the overall impact of the project on the area through which the alignment passes. The results of these procedures and studies are summarized in the Location Study Reports (Project and Design Reports).

2.3.4.5 TSL Guidelines

The following general guidelines for various aspects of the TSL plan can be used to establish the most cost effective bridge type and size and to locate the substructure components appropriately.

2.3.4.5.1 Bridge Length

Bridge Length is determined by the location of the abutments. The location of the abutments is dependent on bridge opening requirements, and the method used to terminate the approach embankment and transition to the structure. Where the embankment is to be terminated by means of a stable end slope, an "open" abutment is located at or near the top of the end slope. End slopes shall be 2:1 or as otherwise established by the Structure Geotechnical Report stability analysis. Where the embankment is to be terminated at a vertical plane, a "closed" or earth retaining abutment is located at that plane. The use of an end slope to terminate the embankment results in a longer bridge than one using a closed abutment; however, overall bridge costs are generally lower with the open abutment design because of the high cost of closed abutments.

Closed abutments are generally designed as a reinforced concrete retaining wall supported on a large spread footing, drilled shafts or a pile supported footing. Closed abutments are seldom economical and should not be used without a detailed cost investigation unless site conditions dictate its use.

Open abutments generally consist of a single or staggered rows of piles, drilled shafts, or a spread footing supporting a concrete cap block. Vaulted abutments are a combination of closed and open abutments used at grade separation or interchange locations.

See Section 2.3.6.2 for more complete guidance on substructure selection.

2.3.4.5.2 Pier Location and Type

The number, type and location of the piers are determined in such a manner as to produce optimum bridge economy within the constraints of horizontal clearance requirements, stream flow requirements and aesthetics. Bridge piers are generally of two basic types; pile or drilled shaft bents, and piers with footings. Bent piers consist of a single row of piles or drilled shafts

supporting a bearing cap. Where required for aesthetic or hydraulic purposes, the extension of the piles above the ground may be encased to produce a solid wall.

Footing supported piers are of many types. Footing may be "spread" (soil or rock supported) or may be supported by drilled shafts or piling. Pier shafts may be solid walls, walls with cantilever extensions (hammerheads) or may consist of a multi-column frame mounted on a plinth or crashwall.

See Section 2.3.6.2.2 for more complete guidance on pier type selection.

2.3.4.5.3 Superstructure Types

Figure 39-3B in Chapter 39 of the Bureau of Design and Environment Manual provides a list of commonly employed superstructure types, the span lengths for which they are applicable, and the approximate construction depth (profile grade to low beam) required for their use. Superstructures may be of any of the types listed for the span length ranges indicated. The figure is a good source for a rough estimate prior to the initiation of the TSL plan development process and can be a helpful tool for the District when evaluating profile grades.

See Section 2.3.6.1 for more complete guidance on this and other aspects of superstructure planning.

2.3.5 TSL Plan Types

Generally, there are five specific types of TSL's. Four are for different kinds of bridges. The fifth is for retaining walls. The following sections present a brief overview of what specific types of information shall be presented on a TSL plan. The first, 2.3.5.1 Highway Bridges, is the most detailed of those dealing with TSL's for bridges. The next three, 2.3.5.2 to 2.3.5.4, deal with railroad bridges, culverts and three sided structures, and pedestrian bridges, respectively. These sections primarily present only some aspects and considerations for TSL's which are different than those for highway bridges. The section on retaining walls (2.3.5.5) is a separate category.

The TSL plan shall be an 11 in. by 17 in. drawing (or drawings) with the standard of preparation being the same as that required for Final Contract plans. The plan sheet shall be presented in a

form that will allow for its eventual refinement as the "General Plan and Elevation" sheet or the cover sheet for Contract Bridge plans.

Section 2.3.13 gives a comprehensive checklist for preparation of TSL plans for bridges and Section 2.3.14 provides online links to sample TSL plans.

2.3.5.1 Highway Bridges

The following is a partial list of items which shall be shown on a TSL plan (as applicable): elevation and plan view, cross section through superstructure, outlines of existing structure, location sketch, waterway information, profile grade data, design specifications, roadway classification data, sketch of typical pier in elevation, stage construction order and limits, foundation type at each substructure, etc.

All aesthetic details for a structure shall be finalized during the TSL phase. Special aesthetic treatments and special bridge features should also be illustrated; however, data and dimensions subject to refinement in the detailed structural analysis should be omitted.

2.3.5.2 Railroad Bridges

The primary differences between highway and railway bridge TSL's are: the AREMA Railway Bridge Design Specifications govern the design, railroad approval of the TSL is required, and stage construction and traffic control differ.

2.3.5.3 Culverts and Three Sided Structures

For culverts, a cross section through the barrel should be shown on the TSL. A longitudinal section which includes lane, shoulder, and median widths as well as roadway cross slopes shall also be given. Special considerations for a culvert TSL include indicating the type of wingwalls proposed. See Sections 2.3.11 and 2.3.13.

Three sided structures are typically shown as culverts on a TSL plan.

2.3.5.4 Pedestrian Bridges

Pedestrian bridges have a minimum vertical clearance which is greater than that required for highway bridges. See Chapter 39 of the BDE Manual. They shall also meet the Americans with Disabilities Act (ADA) requirements and the AASHTO LRFD Guide Specification for the Design of Pedestrian Bridges. See Guide Bridge Special Provision (GBSP 33) for other requirements.

2.3.5.5 Retaining Walls

Walls with an exposed height (defined as the difference in elevation between the finished grade behind the wall and the finished grade in front of the wall) of 7 ft. or greater require a TSL plan be developed. In addition, walls below this height with unique retention conditions such as tiered walls, walls with large/steep back slopes, walls designed to retain slope failures, and walls retaining railroads or disturbance sensitive property may also require a TSL plan. The following is a partial list of items which shall be shown on a TSL plan (as applicable): elevation and plan view, typical wall section, location sketch, roadway profile grade data, design specifications, etc. Contact the BBS if the need for a TSL plan remains uncertain.

All aesthetic details for a retaining wall shall be finalized during the TSL phase. Special aesthetic treatments and special wall features should also be illustrated; however, data and dimensions subject to refinement in the detailed structural analysis should be omitted.

See Section 2.3.13, which gives a comprehensive checklist for preparation of TSL plans for retaining walls and Section 2.3.14 which provides online links to sample TSL plans.

2.3.6 Bridge Type Study

A Bridge Type Study is the process by which the most appropriate structure type for a given location is determined and is a synthesis of the necessary economic, aesthetic and site evaluations which lead to that selection. A well conceived Bridge Type Study considers the structure types feasible for the site parameters or environmental commitments, provides the reasoning for eliminating or developing particular alternates as well as compiles cost estimates for all alternates considered and finally the rationale for the selection of the structure type chosen. Essentially, a Bridge Type Study is an important phase in the TSL plan preparation process.

In each project, the Bridge Type Study is a part of the planning computations which justify the TSL plan and as such is not submitted for review. However, for major river crossings or when requested by the Bureau of Bridges and Structures, a Bridge Type Study becomes a formal report requiring the approval of the Bridge Planning Engineer before preparation of the TSL plan can commence. Such a report would provide additional written treatments concerning economic evaluations for the viable alternates, span length versus pier height studies for the approaches, pier type structural and aesthetic studies, main spans and the approaches structure type aesthetic studies, and architectural presentations of the alternate systems presented in the report. Since AASHTO Specifications do not specifically address some of the long span bridge types associated with major river crossings, the report should also document unusual design procedures contemplated, deviations from or variations of AASHTO Specifications to be used, special materials or details proposed or tests anticipated.

Economic Evaluation: It is the philosophy of the Bureau of Bridges and Structures that all structures are to be planned within the constraints of site requirements and policy such that the selected bridge configuration will result in the minimum structure cost. The minimum structure cost shall be established on the basis of initial structure cost with due consideration given to replacement and maintenance costs.

Increasing minimum costs are justifiable when it will result in either the least overall highway project cost, reduced annual maintenance costs or where other intangible benefits are derived. The use of cost premiums shall be supported by proper economic documentation.

The following features are obvious cost premiums:

1. Bridge length in excess of that required by clearance or waterway opening requirements.
2. Bridge widths in excess of that required by structure width policy.
3. Bridge superstructure depth greater than the most economical.
4. Bridge length in excess of that required to avoid conflict between new and old substructure units.

Aesthetics: Each structure should be evaluated for aesthetics. It is seldom practical to provide cost premium aesthetic treatments without a specific demand, but careful attention to the details of the lines and forms used will generally result in a pleasing structure appearance.

Some basic aesthetic guidelines are:

1. Avoid mixing structural support systems, i.e. trusses and beams, or column piers with solid piers.
2. Whenever possible, use one or no more than two beam depths in a structure length. Avoid sandwiching shallow spans between two deeper spans and utilizing very slender superstructures over massive piers.
3. Abrupt changes in beam depth should be avoided when possible. Whenever sudden changes in the depth of beams in adjacent spans are required, care should be taken in the development of details at pier locations. If thoughtfully considered, treatment of these depth transition piers can create an attractive and pleasing appearance which will compliment the aesthetics of the overall project.
4. The lines should be simple and without excessive curves, insets, offsets and ornamentation.
5. All structures should blend with their environment.

One of the most significant design factors contributing to the aesthetic quality of a highway might variously be termed unity, consistency, coherence or continuity - that quality which makes it appear the whole has been consciously designed to present a “highway theme”. Highways are not, from an aesthetic design point, easily divisible, particularly the modern interstate or freeway with long sight distances. Therefore, every element in the highway complex should relate directly or indirectly to the others if the desired theme is to be realized.

Because of the typically great extent of modern multi-lane freeways, it is inappropriate to follow a single theme for the full extent of a highway. Changes in the character of the terrain and in the culture of the various areas traversed will facilitate the blending or graceful transitioning from one basic set of design concepts to another.

The thematic concept for highway design can normally be accomplished within the general guides of the standards developed by the Department for both structures and roadways requiring only minimal special designs and accomplished with minor project cost increases.

It is anticipated that special situations and projects will arise where new concepts and details will require development to fulfill the aesthetic needs of a given project. In particular, Context Sensitive Solutions (CSS) will be a requirement on highway and structure projects. Details and

concepts as a result of CSS should be coordinated with the appropriate District and the Bureau of Bridges and Structures. See Section 2.1.3 for additional information on CSS.

2.3.6.1 Superstructure Component Selection

Figure 39-3B in Chapter 39 of the Bureau of Design and Environment Manual provides a list of commonly employed superstructure types; the span ranges for which they are applicable; and the approximate construction depth (profile grade to low beam) required for their use. Superstructures may be of any of the types listed for the span length ranges indicated. Where two or more types are applicable to the span length and depth requirements of the site, the choice shall be made on the basis of comparative cost. The values provided are general guidelines for setting profile grades, sizing waterway openings and estimating cost for a proposed structure and should not be used for detailed TSL determination.

2.3.6.1.1 Structural Steel

All wide flange beams and plate girders shall be designed for composite action in both positive and negative moment regions. See Section 3.3.9 for more information. Long span steel plate girders may be evaluated for the option of HPS 70 ksi hybrid flanges at the piers, or the option of straight haunched girders for bridges with vertical clearance issue. When practical (i.e. cost, constructability, vertical clearances, etc.), web depths should meet AASHTO 2.5.2.6.3 and 2.5.2.6.2 live load truck criteria. The recommended minimum wide flange section shall be W27. Due to constructibility and serviceability concerns, contact the BBS before using wide flange sections shallower than W27. See Section 2.3.8 and 3.3.25 for stage construction limitations.

Structural steel shall utilize the materials designated in Table 6.4.1-1 of the LRFD Specifications or Table 10.2A of the AASHTO Standard Specifications for Highway Bridges. When conditions are appropriate (see below), unpainted AASHTO M 270 Grade 50W should be used for new and reconstructed bridges with consent from the District. When unpainted weathering steel is not applicable, M270 Grade 50 should be specified for primary members unless M270 Grade HPS 70W is authorized by the Bureau of Bridges and Structures. For bridge widening projects, the section properties of the existing members should be matched.

Unpainted AASHTO M 270 Grade 50W (Weathering Steel) is encouraged for bridges when criteria of the Federal Highway Administration Technical Advisory (T 5140.22) "Uncoated

Weathering Steel in Structures" (1989)[1] are met. All surfaces are blast cleaned to remove mill scale and to promote a uniform weathering appearance. Also, protection measures for substructure concrete surfaces vulnerable to staining shall be as directed by the District. See Section 3.1.3 for applicable General Notes when weathering steel is specified.

[1]http://www.fhwa.dot.gov/bridge/t514022.cfm

2.3.6.1.2 Prestressed Concrete Deck Beams

Precast Prestressed Concrete Deck Beams are available in 6 different depths (11" thru 42") and can be an economical option for structures with spans ranging from 15 to 100 feet. Some advantages include relatively shallow overall superstructure depth, and reduced construction time. A reinforced, non-composite, 5 inch minimum Concrete Wearing Surface (CWS) shall be used on these types of structures for State routes. An initial 1 ¼ inch minimum Hot Mix Asphalt (HMA) wearing surface may be used in lieu of the CWS on Local projects and on State routes for new deck beam superstructures on existing substructures with load restrictions as approved by the Bureau of Bridges and Structures. Approach slabs are required on State projects but are optional for Local projects. Base Sheets depicting the preferred application of deck beam superstructures are available on the IDOT web site.

PPC deck beams shall not be used on bridges with large vertical curves, superelevation, superelevation transitions, or with skew angles greater than 35 degrees. Also, changes in beam depths from span to span are not desirable. The standard details, base sheets and charts do not address these conditions. Exceptions may be allowed on a case by case basis when very unique circumstances dictate a need but are subject to approval by the Bureau of Bridges and Structures. Deck beam structures with all new substructure units and a total length equal to or less than 300 feet shall be fixed at all substructure units. An analysis for thermal forces is not required for structures within the 300 feet length limitation. Longer structures generally should incorporate an expansion joint; however, longer structures with all fixed supports may be permitted on a project-by-project basis in which case all thermal forces shall be accounted for in the design.

The selection charts illustrate the relationships between beam size and beam strand patterns, and utilize bar graphs to depict the maximum span length for each loading combination. The charts are configured such that the strand patterns are listed on the y-axis, the span lengths are listed on the x-axis. There is one chart for each beam size. For more detailed policies on the PPC deck beams see Section 3.5 and the Design Guide 3.5.

The deck beam charts were developed using the loading cases and Design Criteria shown below:

Loading cases for 11 inch beams:

1. Bare deck beams + future wearing surface + Type T-1 railing and curb.
2. HMA wearing surface + future wearing surface + Type T-1 railing and curb.
3. Concrete wearing surface + future wearing surface + F shaped barrier.

Loading cases for 17 inch thru 42 inch beams:

1. Bare deck beams + future wearing surface + Type SM railing.
2. HMA wearing surface + future wearing surface + Type SM railing.
3. Concrete wearing surface + future wearing surface + Type SM railing.
4. Concrete wearing surface + future wearing surface + F shaped barrier.

Where:

Bare deck beams	=	No initial wearing surface
Concrete wearing surface	=	70 pounds per square foot
HMA wearing surface	=	40 pounds per square foot
Future wearing surface	=	50 pounds per square foot
Type SM railing	=	100 pounds per foot
F shaped barrier	=	450 pounds per foot
Type T-1 railing and curb	=	185 pounds per foot

Additional Design Criteria:

1. LRFD 4th Edition with 2008 & 2009 interims.
2. ½ inch diameter low relaxation seven-wire strands, f_{pu} = 270,000 psi.
3. Concrete beam strengths f'_c of 6,000 psi with release strengths f'_{ci} of 5,000 psi.
4. HL-93 live load.
5. Live load distribution according to “(g)-connected only enough to prevent relative vertical displacement at the interface” of AASHTO Table 4.6.2.2.2b-1.
6. Interior beam design.
7. 1 inch camber for dead load calculations.
8. Concrete wearing surface is considered non-composite.
9. Barriers, railings and curbs are distributed over 3 beams.

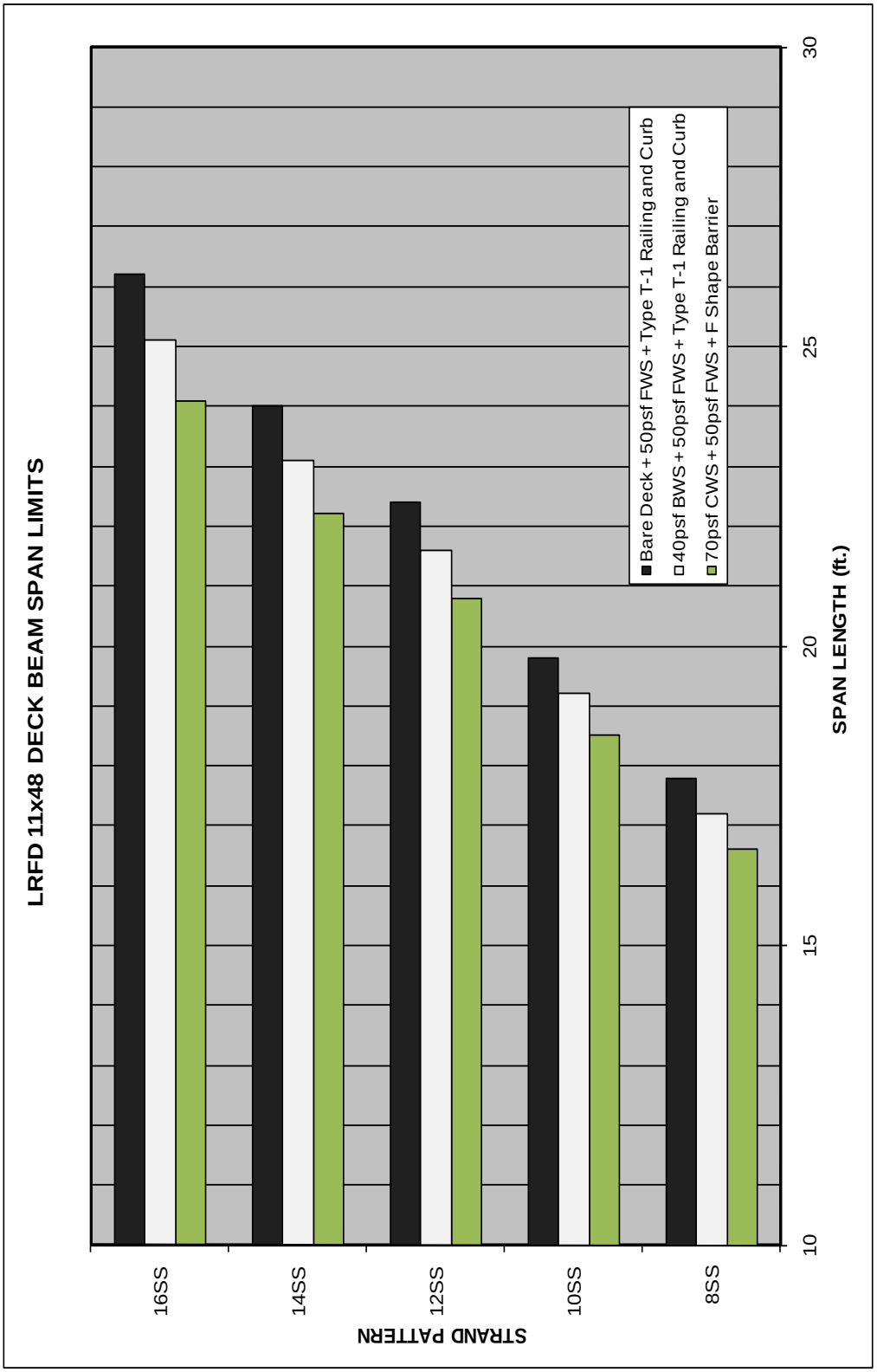

Figure 2.3.6.1.2-1

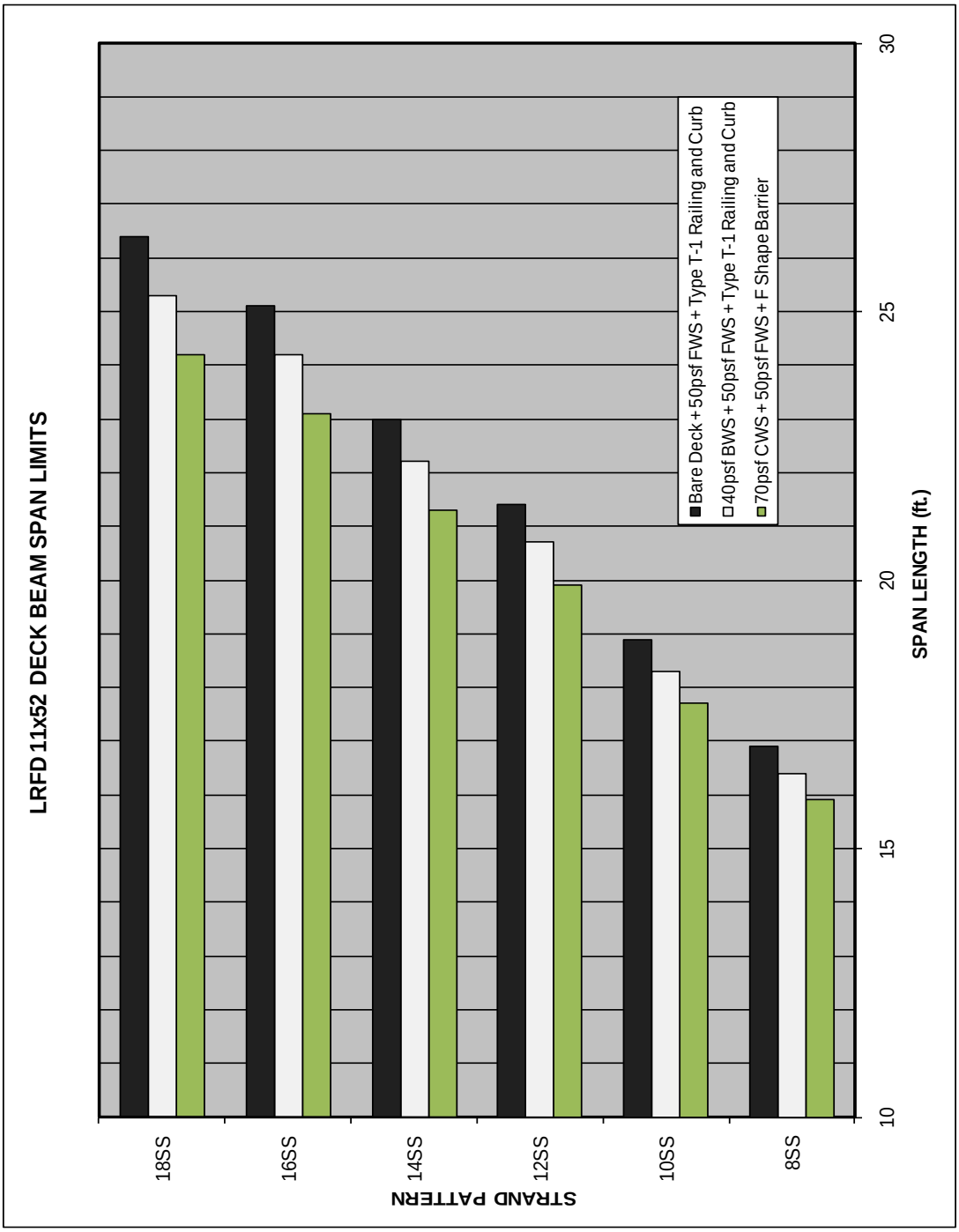

Figure 2.3.6.1.2-2

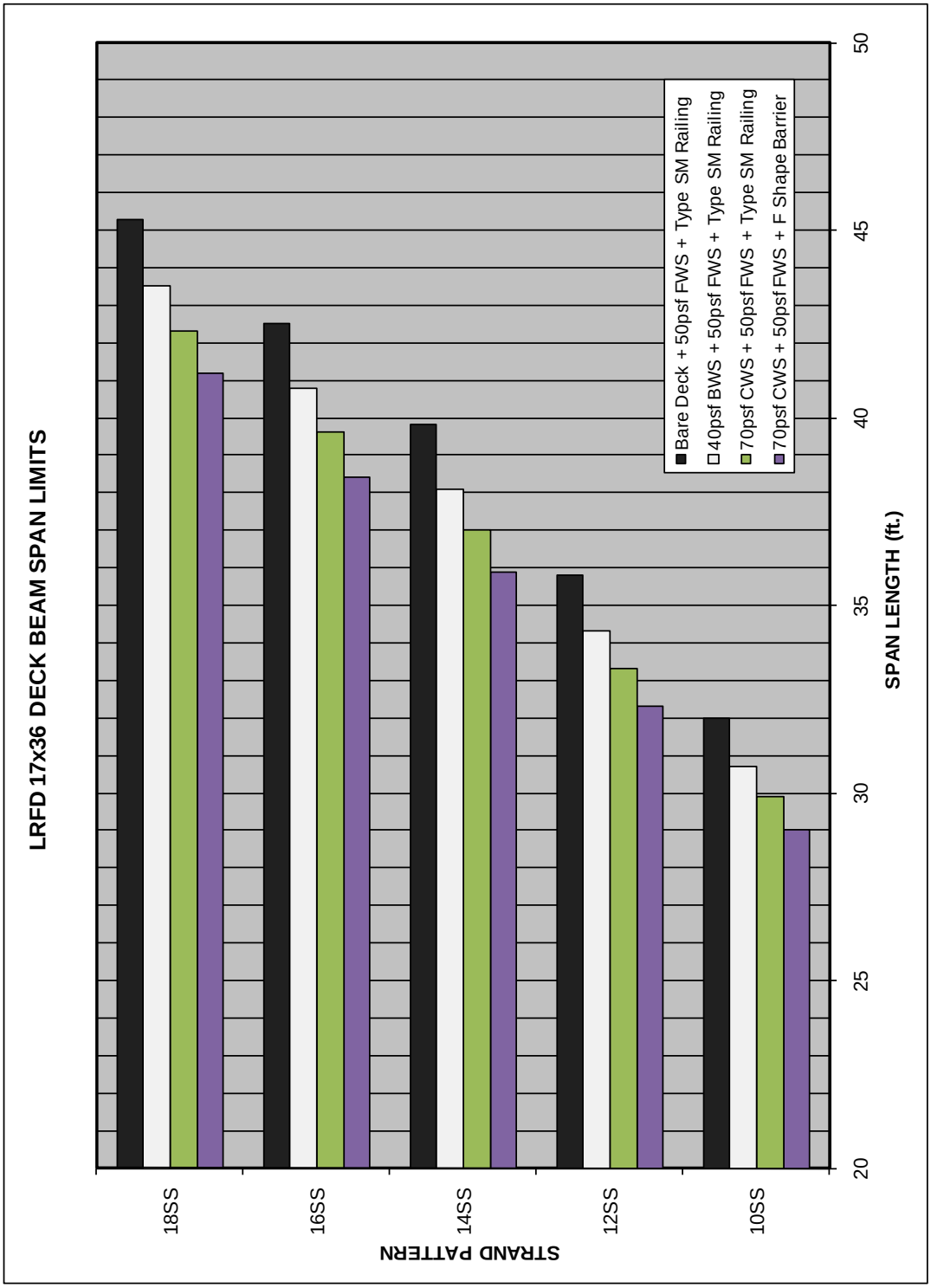

Figure 2.3.6.1.2-3

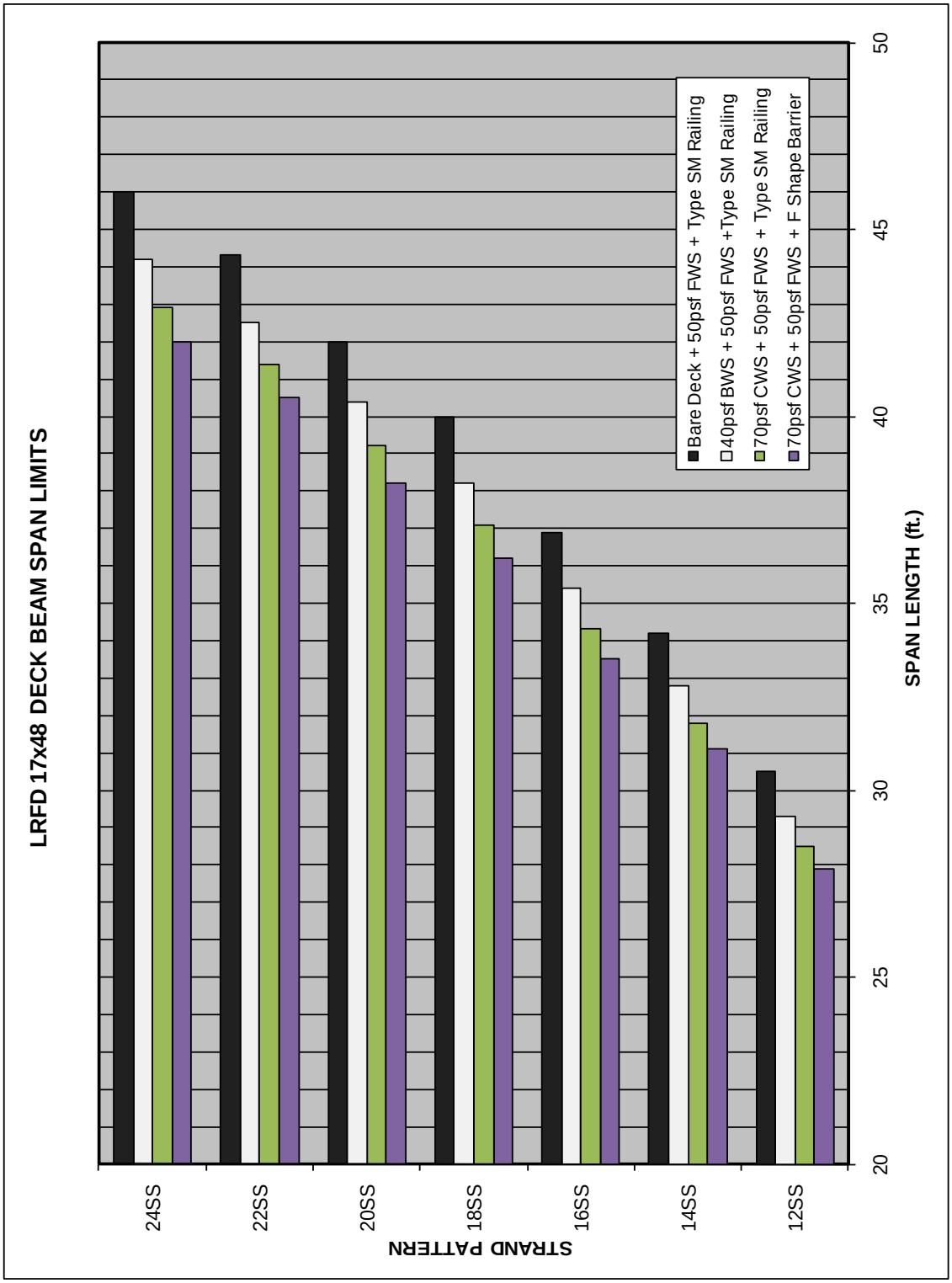

Figure 2.3.6.1.2-4

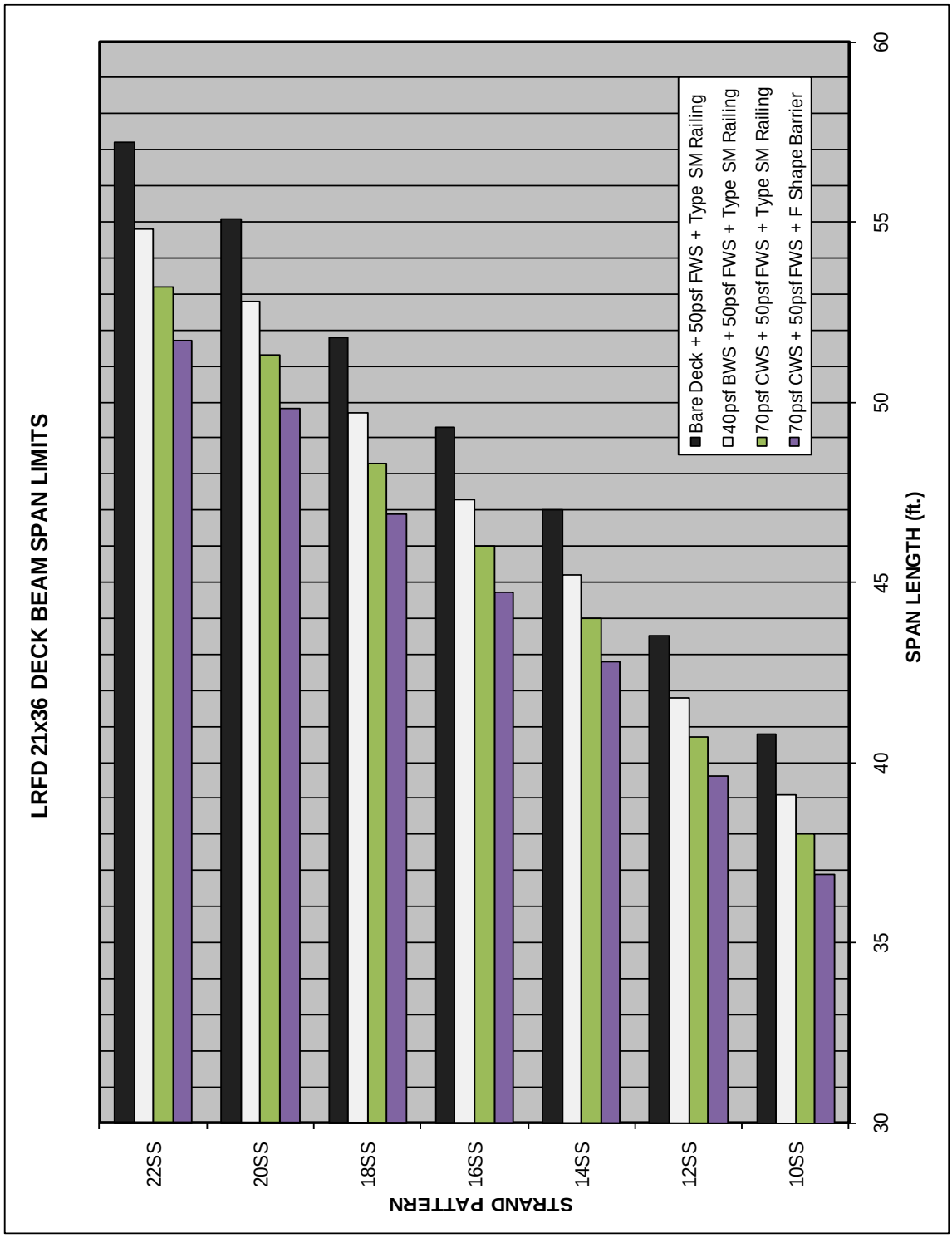

Figure 2.3.6.1.2-5

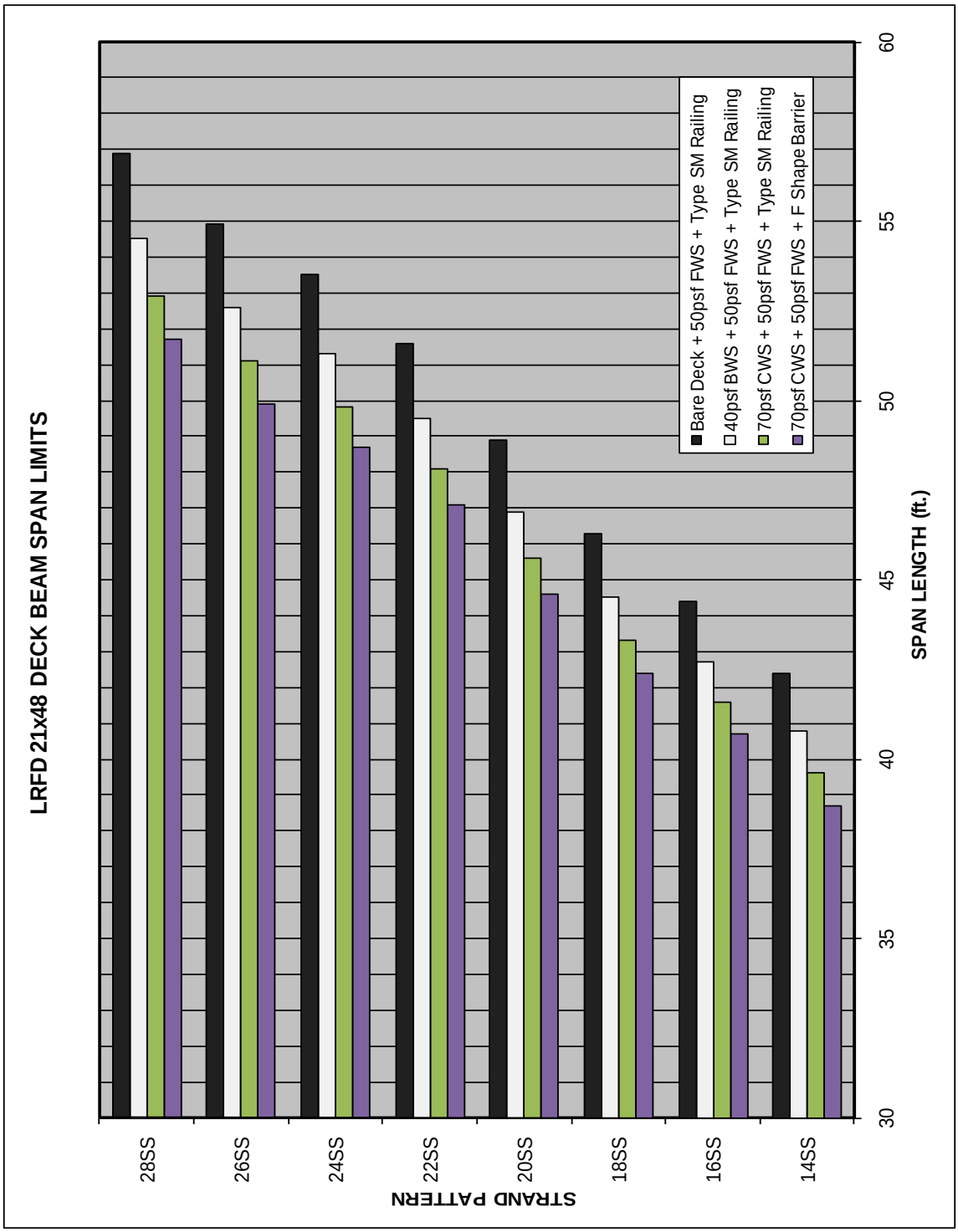

Figure 2.3.6.1.2-6

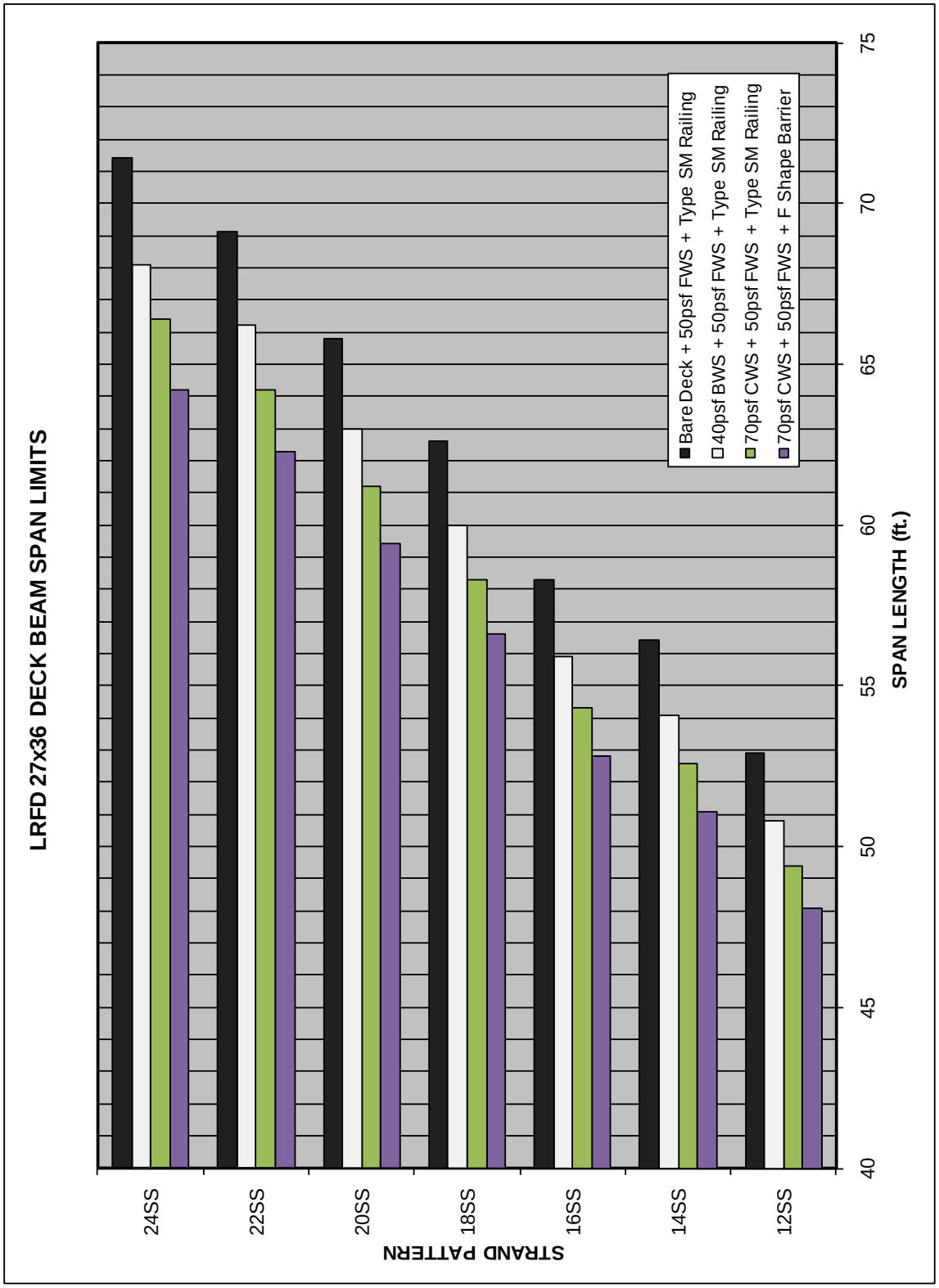

Figure 2.3.6.1.2-7

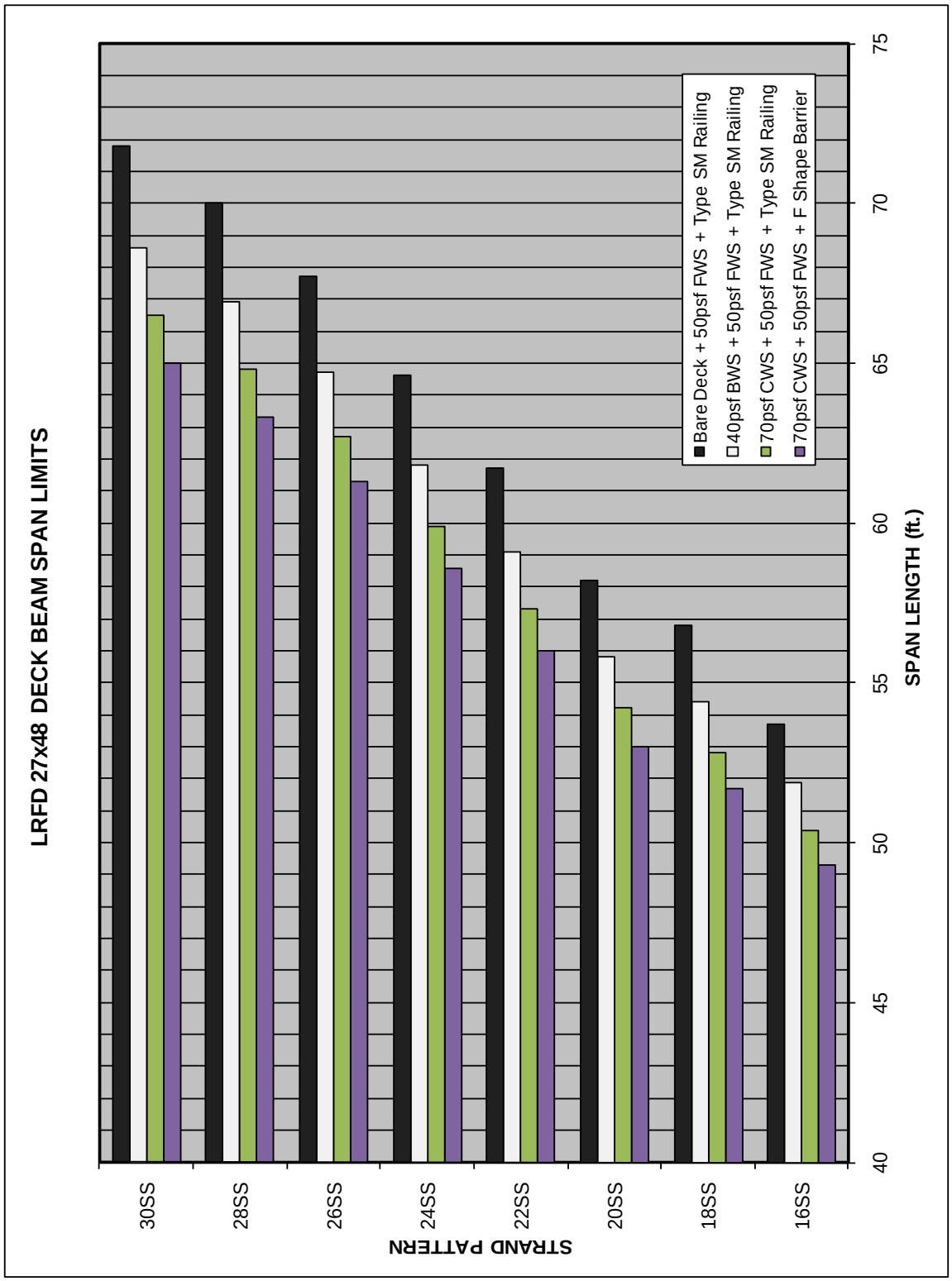

Figure 2.3.6.1.2-8

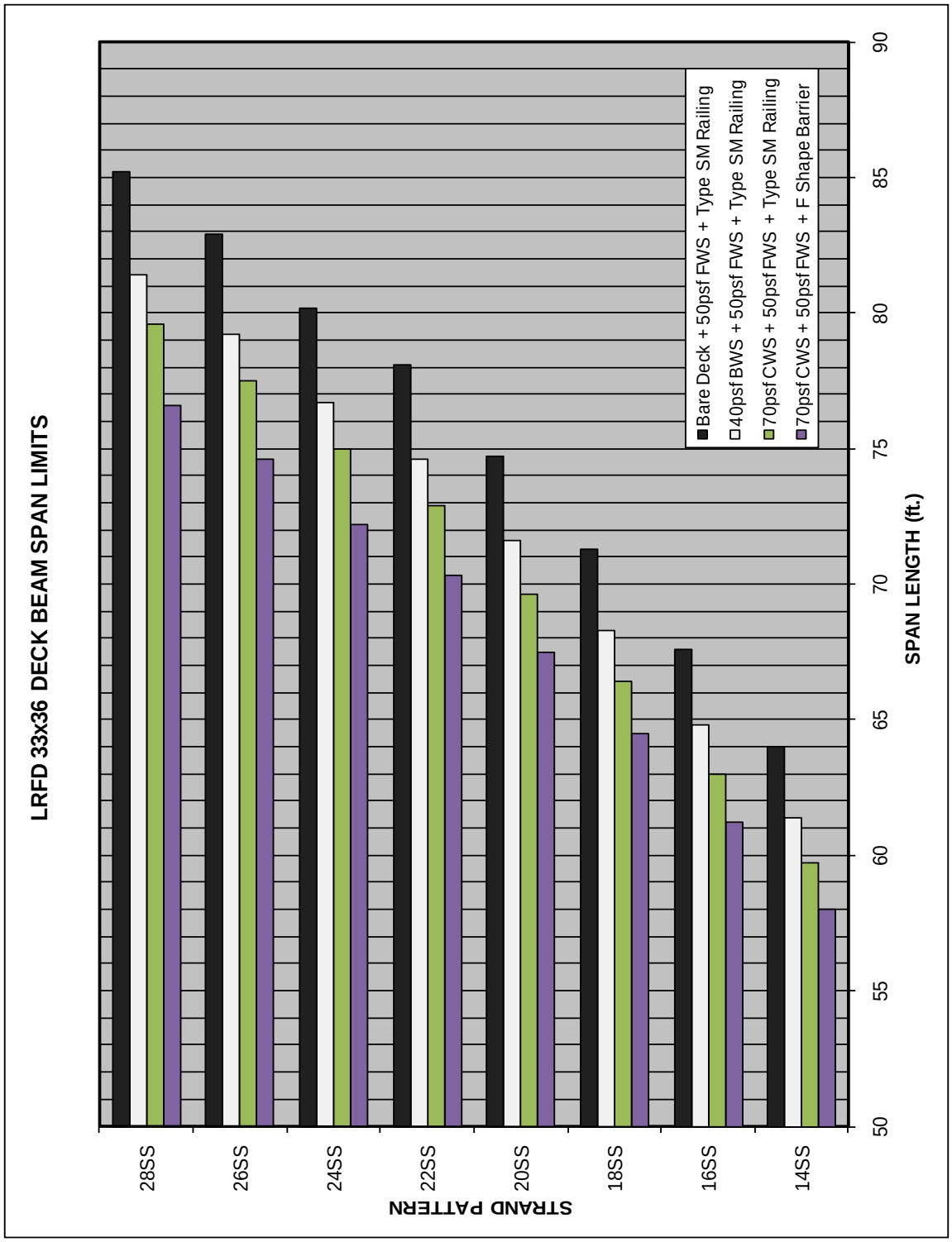

Figure 2.3.6.1.2-9

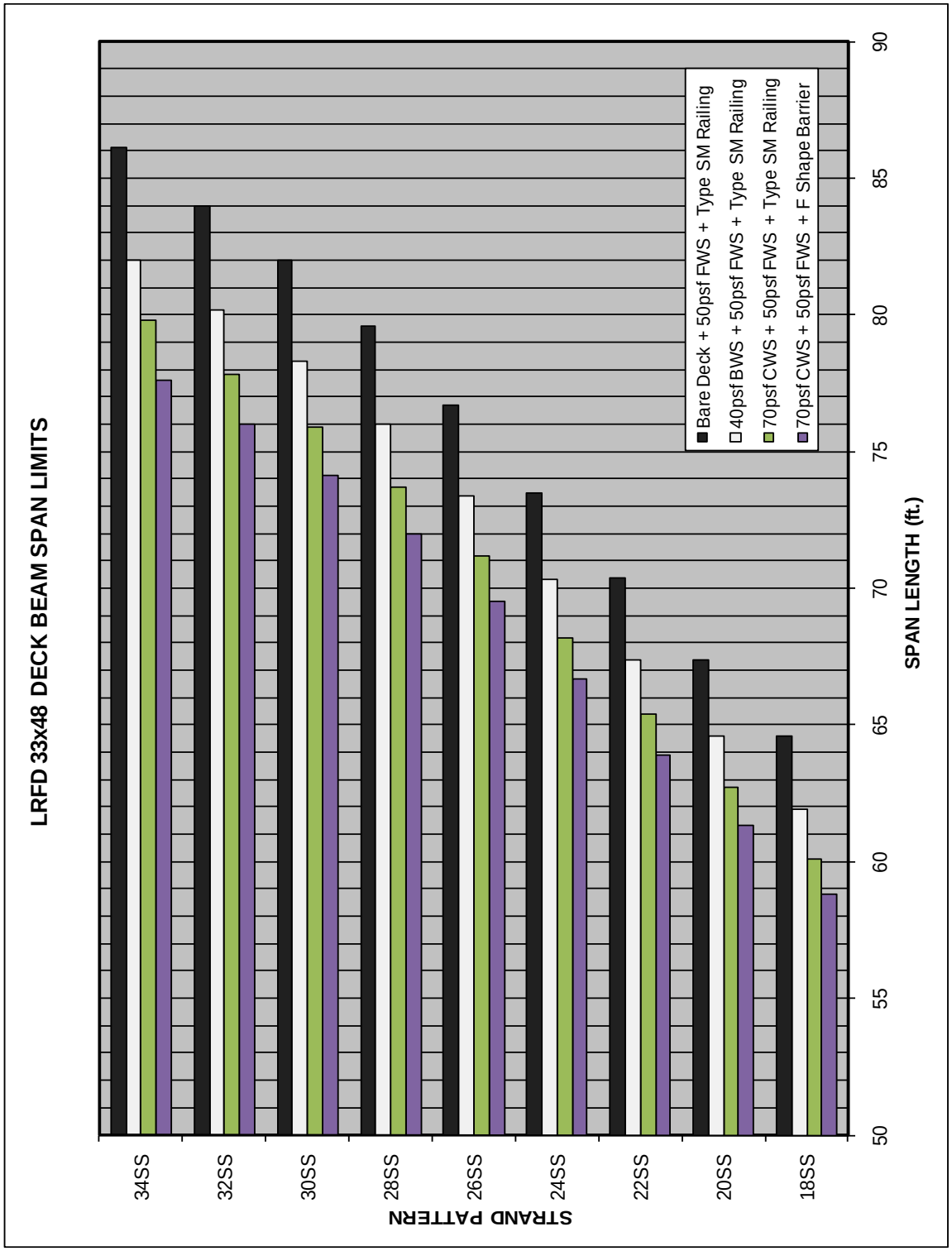

Figure 2.3.6.1.2-10

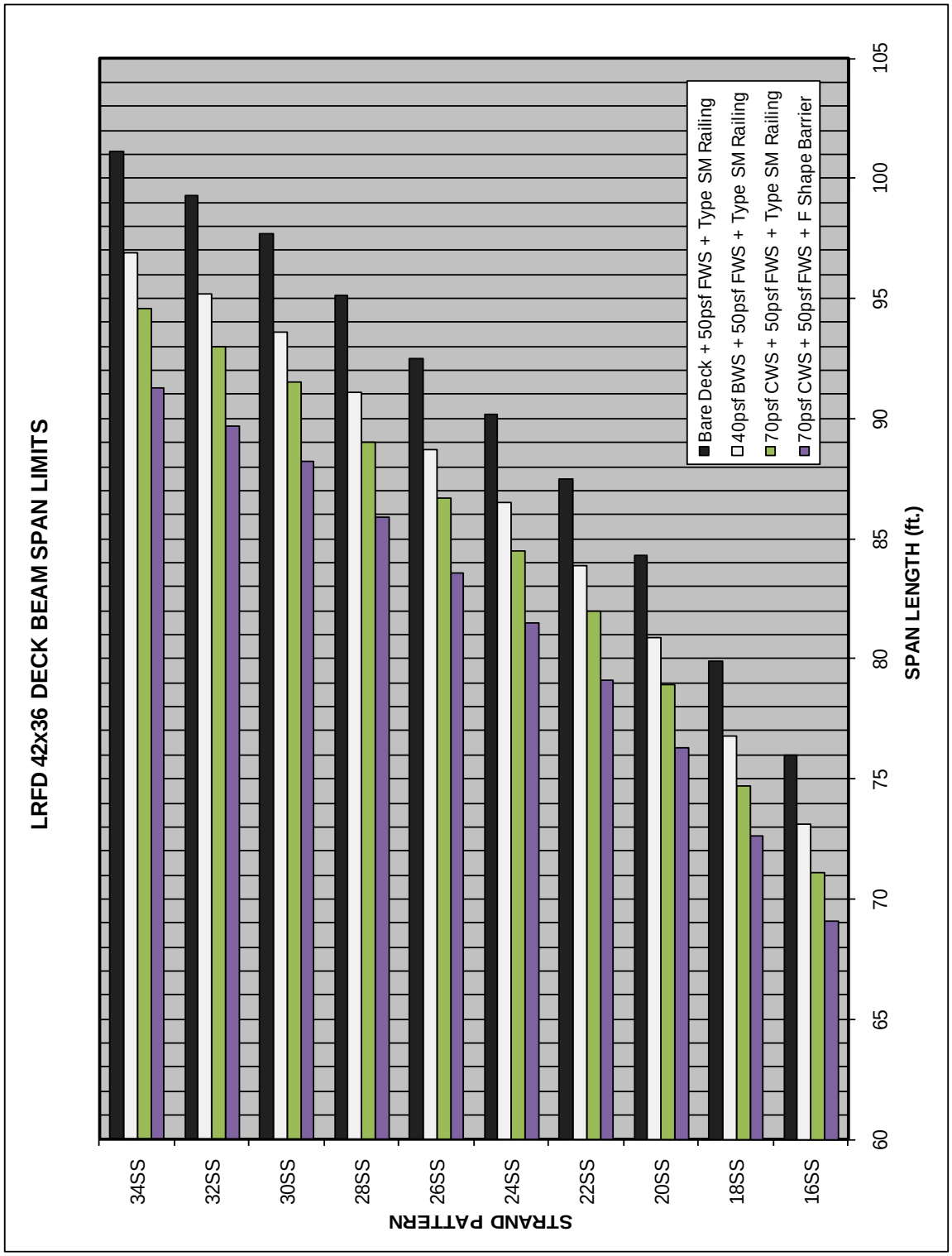

Figure 2.3.6.1.2-11

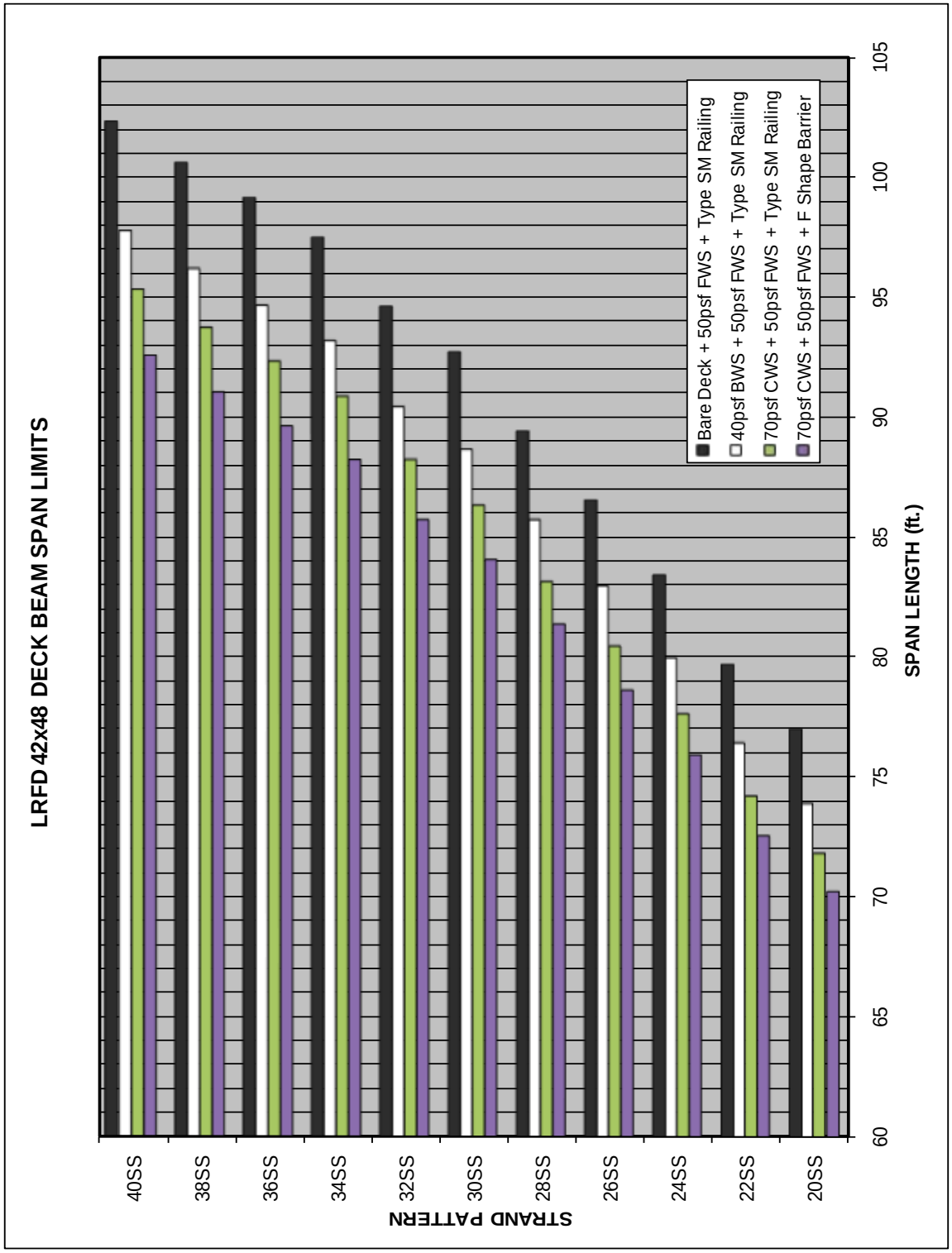

Figure 2.3.6.1.2-12

2.3.6.1.3 Prestressed Concrete I-Beams and Bulb-T Beams

For PPC I-beams and bulb T-beams, selection charts have been developed to aid in determining beam size, beam spacing, and beam strand patterns for a given span length. These charts illustrate a bar graph depicting the span ranges for each strand pattern with beam spacings ranging from 4 ft. 6 in. to 9 ft. 0 in. The charts are configured such that the strand patterns are listed on the y-axis, the span lengths are listed on the x-axis and the beam spacings are listed on the bars of the bar graph. There are two charts for each beam, one for simple span designs and one for multi-span designs. The scales depicting the span length ranges for the x-axis were chosen for presentation purposes and therefore the absolute minimum span length for the strand pattern may not be defined on the chart. These limitations are available in Tables 3.4.4.1-1 through 3.4.4.1-12. When possible the minimum span length limitations are depicted by darkening the bars for the lower boundary.

To use the chart, enter a span length starting from the bottom of the chart and go up until a strand pattern is intersected with a beam spacing equal to or greater than the desired beam spacing. For example, a 36 in. I-beam with a 57 ft. span and 6 ft. beam spacing would require strand pattern 18DS or 20DSH with 18DS being the most economical.

The charts were developed using the following criteria:

1. LRFD 3rd Edition with 2005 interims
2. ½ inch diameter low relaxation seven-wire strands, f_{pu} = 270,000 psi.
3. Concrete beam strengths f'_c of 6,000 psi and 7,000 psi with release strengths f'_{ci} of 5,000 psi and 6,000 psi respectively. Concrete deck strength of 3,500 psi.
4. HL-93 live loading using simplified distribution. See Section 3.3.1.
5. 8 inch deck thickness
6. 1 inch average fillet height for dead load only. Fillet not included in section properties.
7. 6 beam lines.
8. Standard F-shape concrete barrier weighing 450 pounds per linear foot.
9. 50 psf future wearing surface.
10. Multi-span charts are based on two equal spans.

These charts can be used to help choose an appropriate beam size for a given bridge. They also provide designers with a good starting point when selecting a strand pattern. They are not to be used in lieu of computations for the final design of a structure.

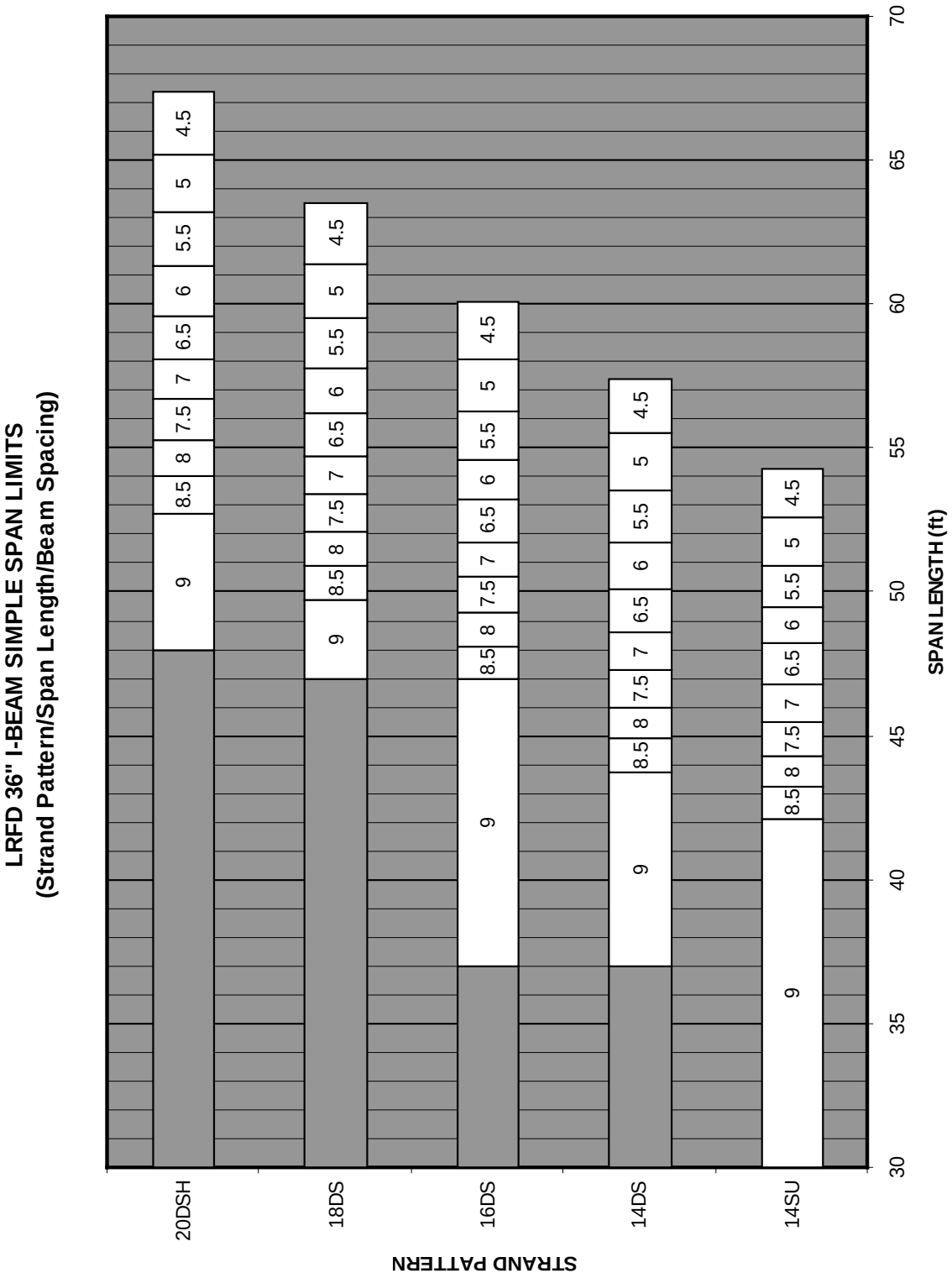

Figure 2.3.6.1.3-1

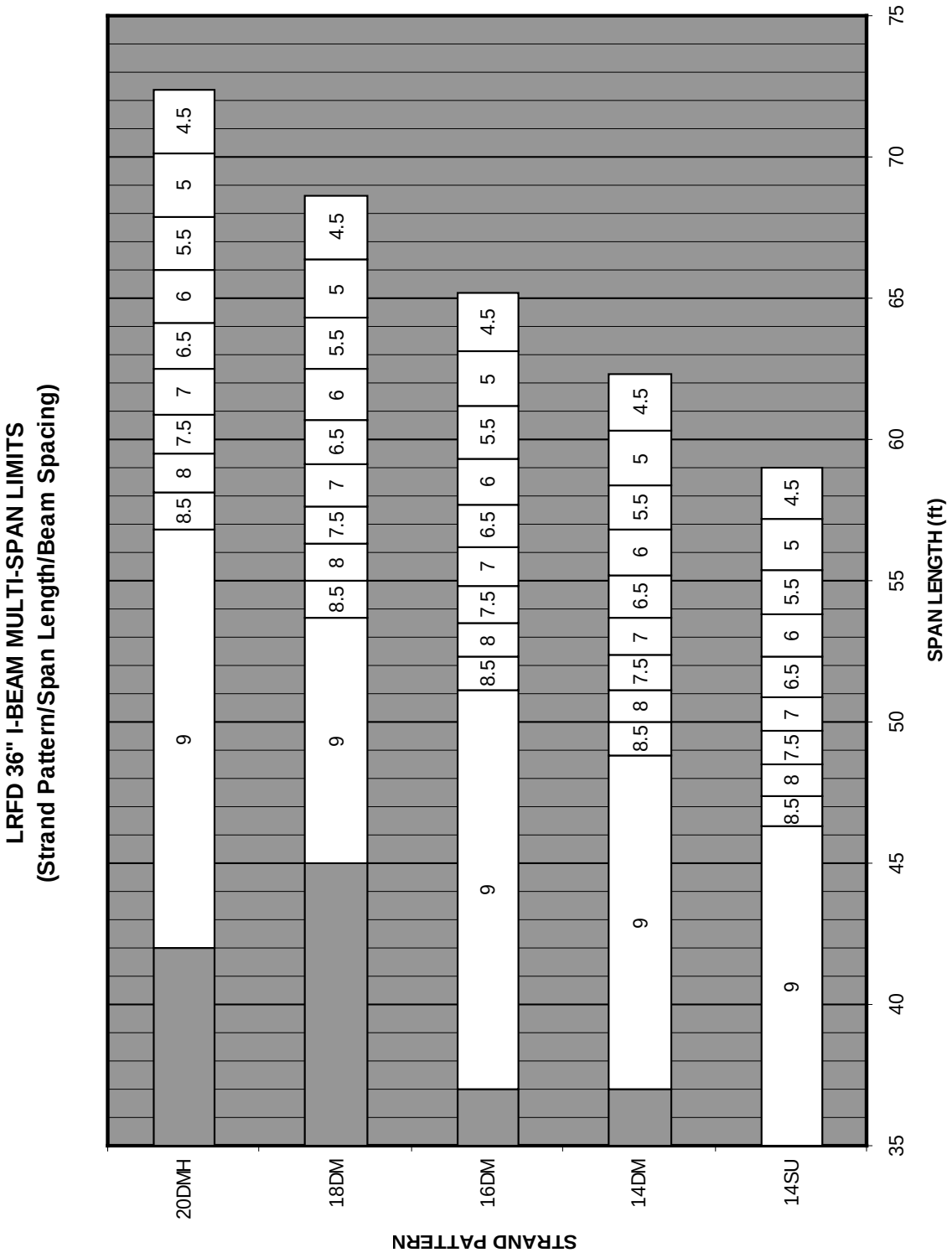

Figure 2.3.6.1.3-2

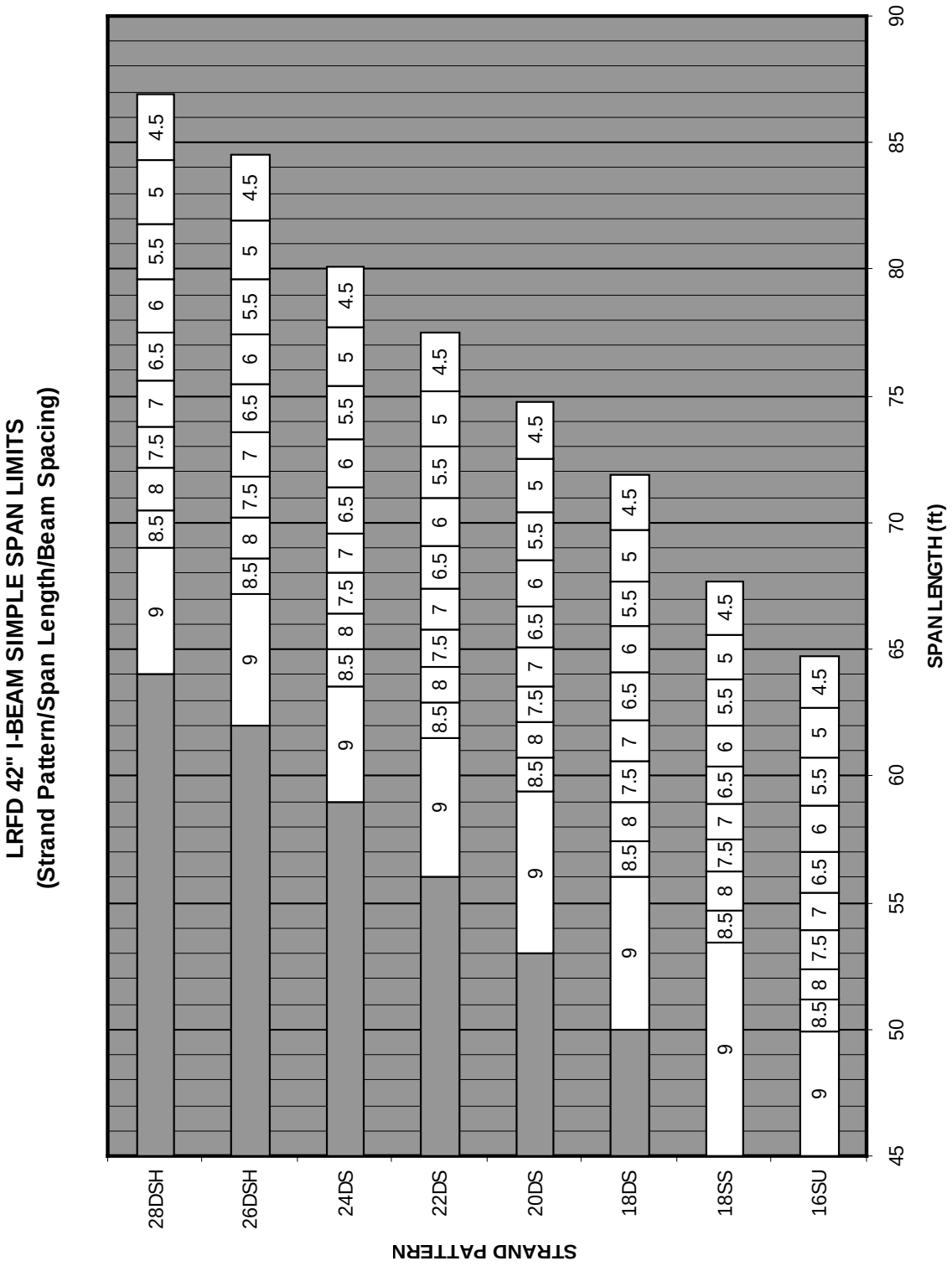

Figure 2.3.6.1.3-3

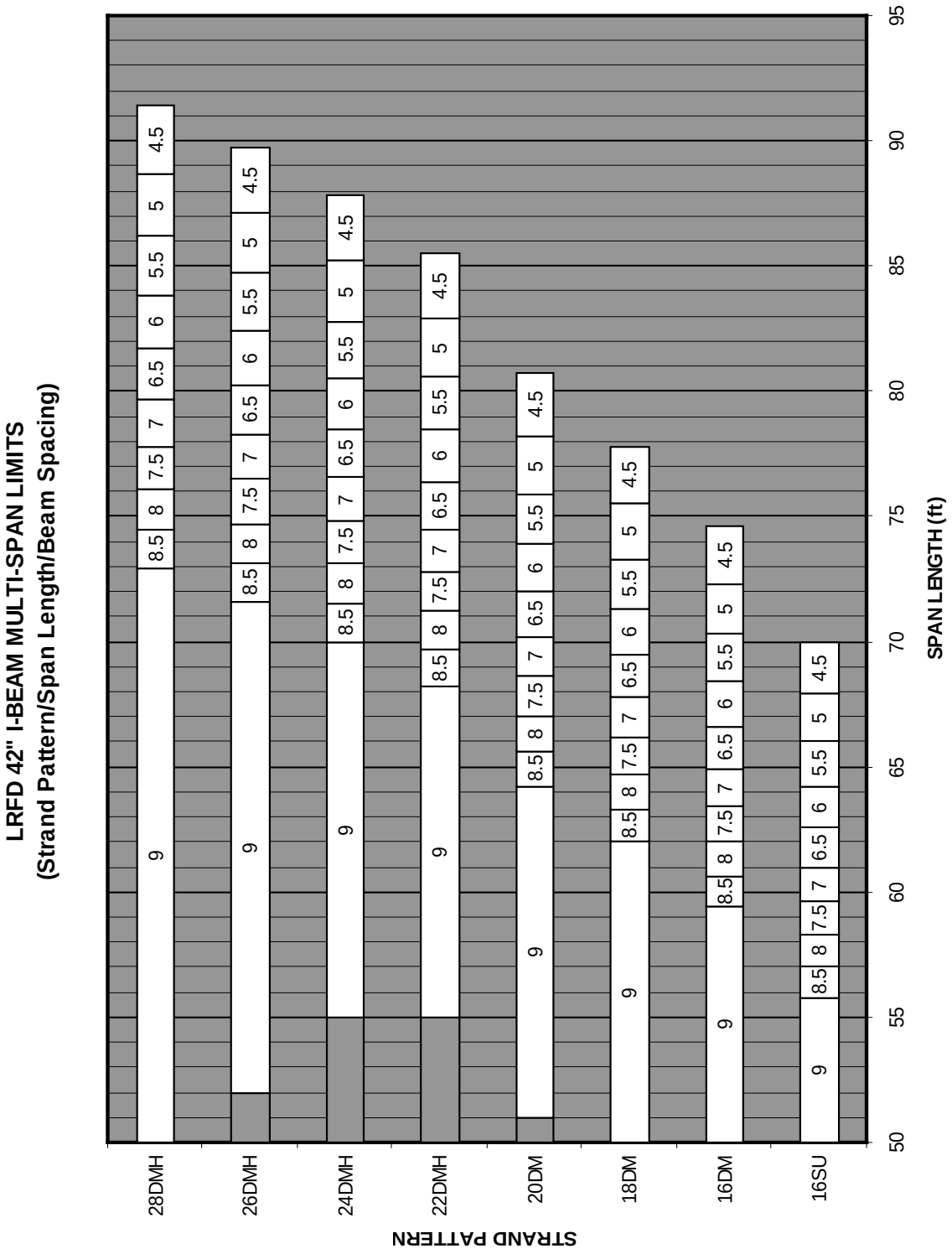

Figure 2.3.6.1.3-4

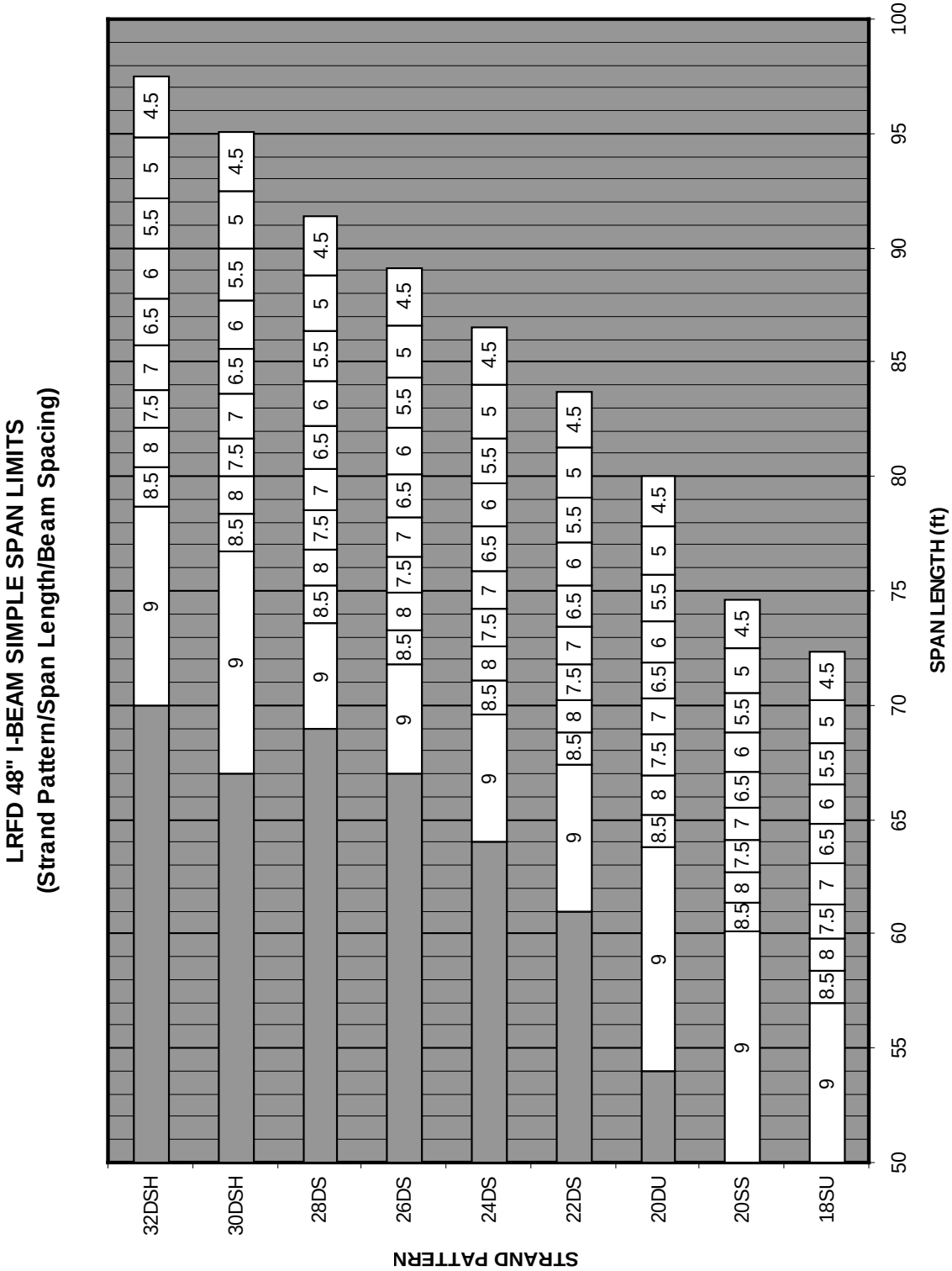

Figure 2.3.6.1.3-5

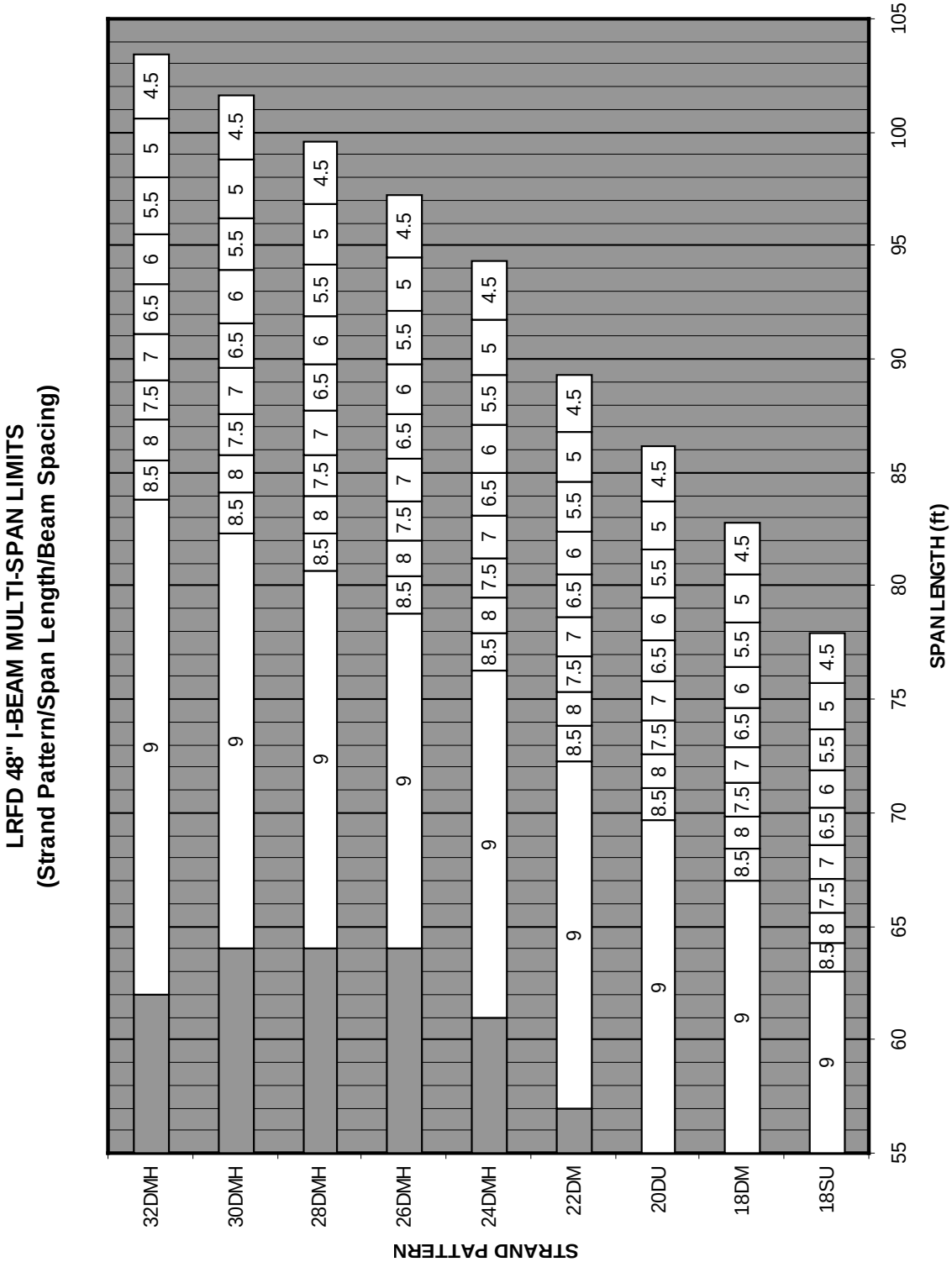

Figure 2.3.6.1.3-6

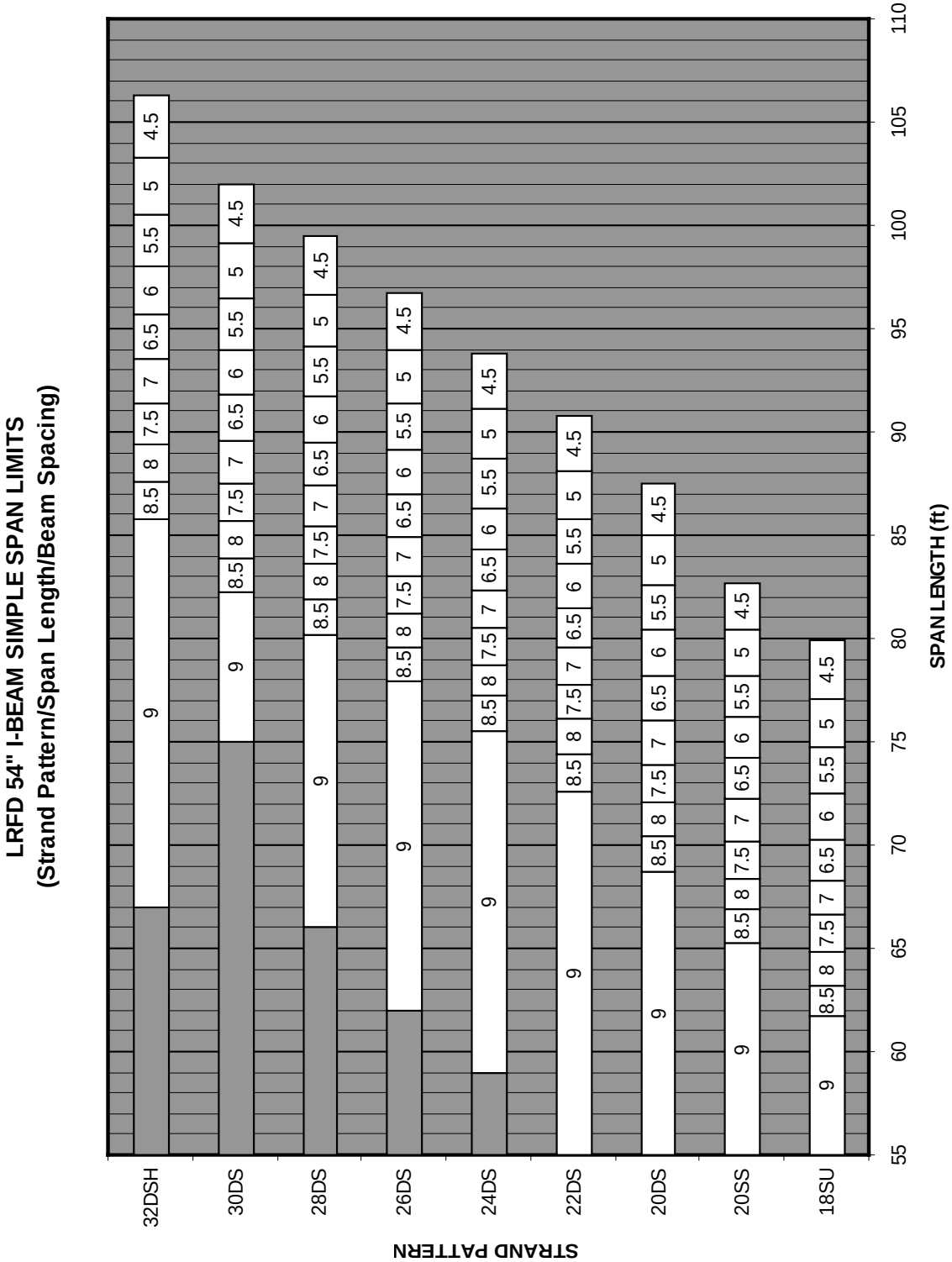

Figure 2.3.6.1.3-7

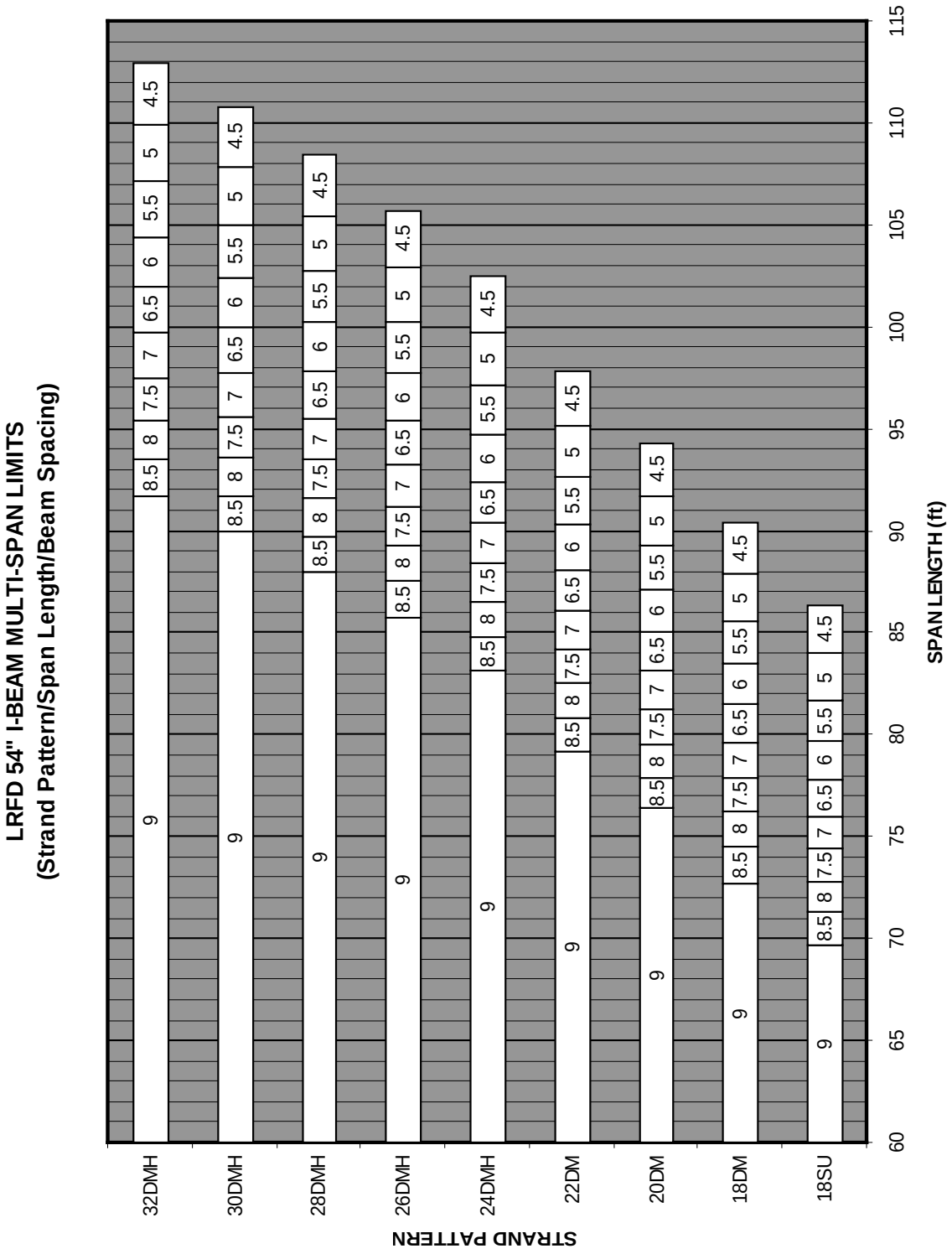

Figure 2.3.6.1.3-8

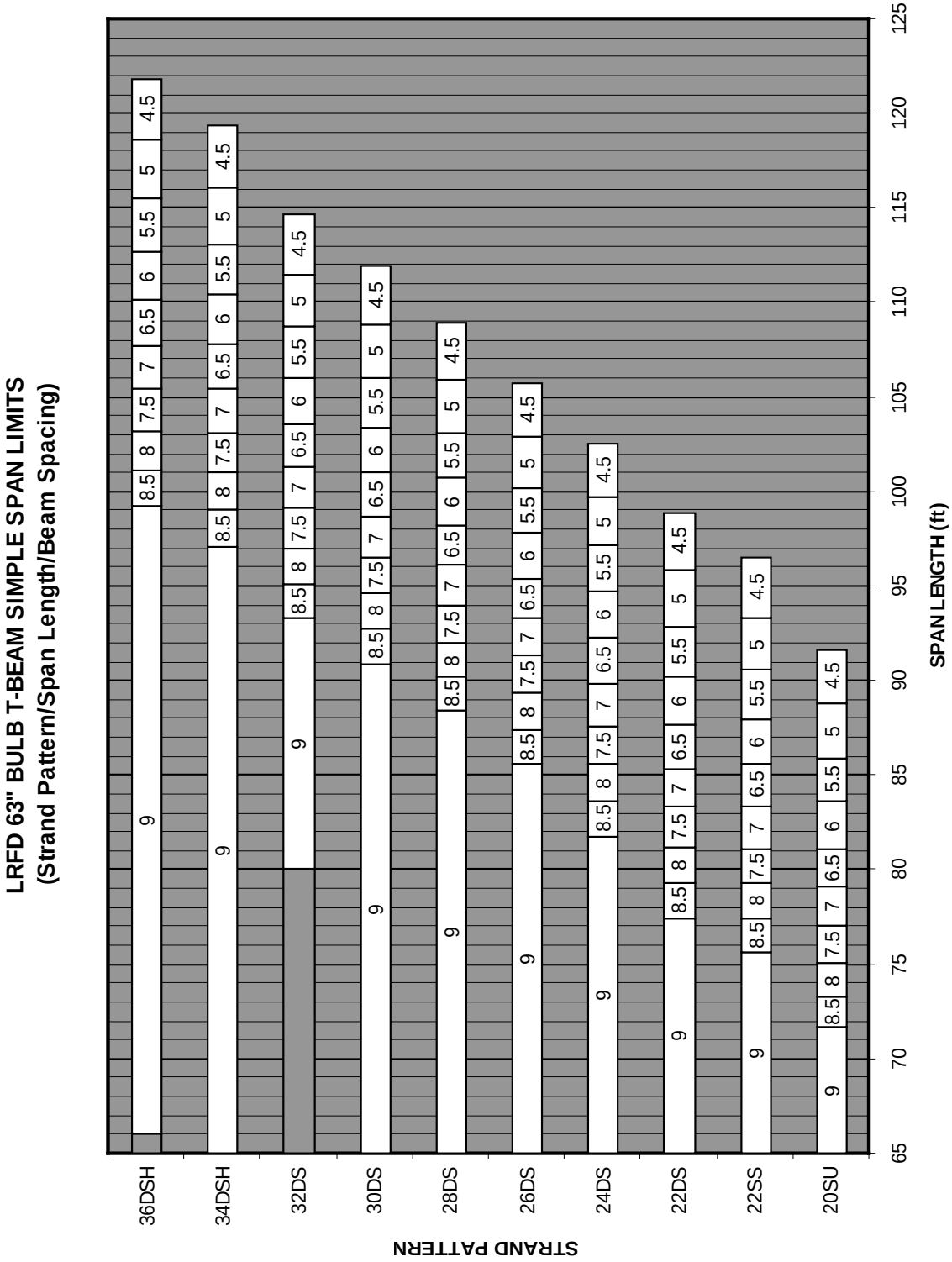

Figure 2.3.6.1.3-9

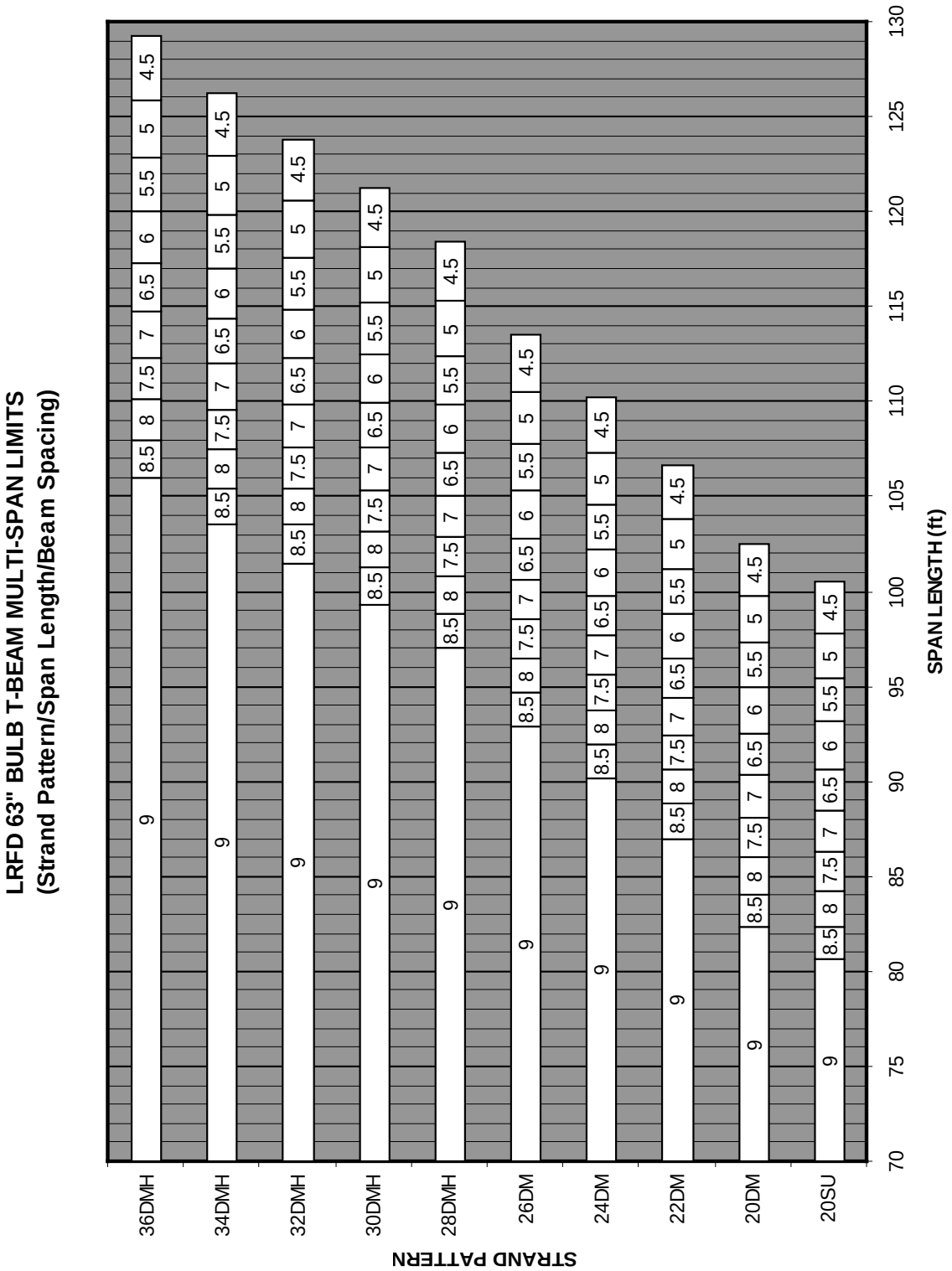

Figure 2.3.6.1.3-10

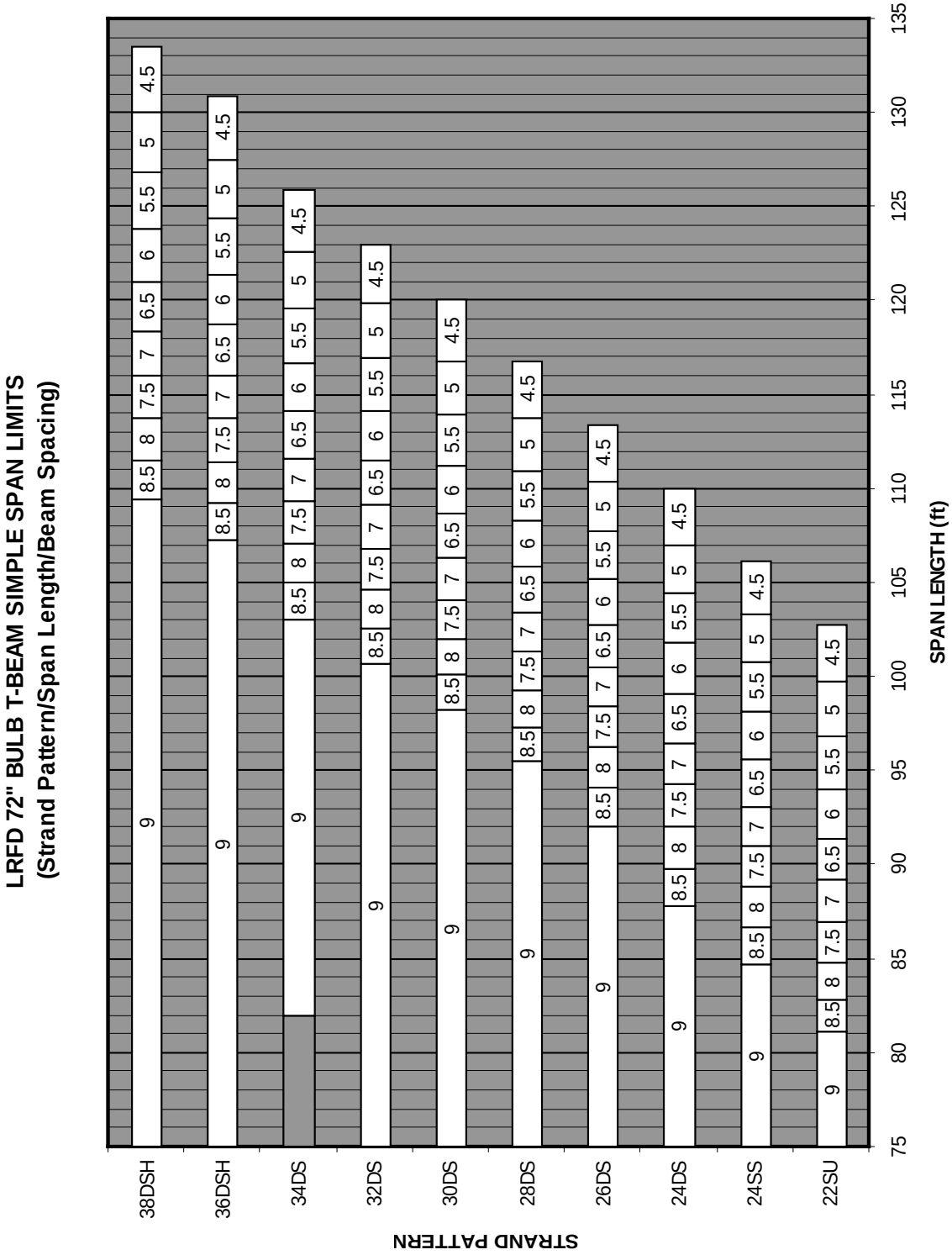

Figure 2.3.6.1.3-11

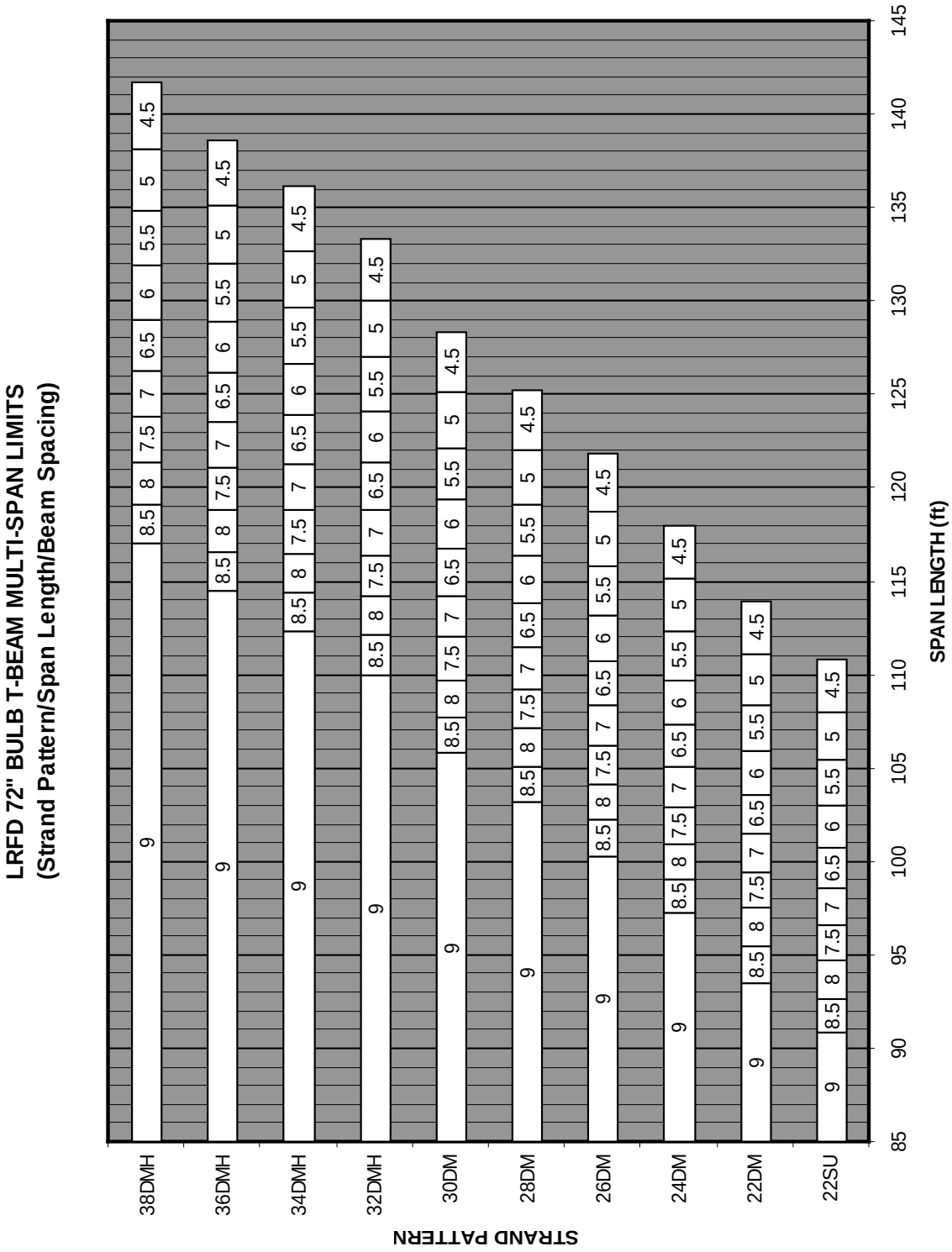

Figure 2.3.6.1.3-12

2.3.6.1.4 Slab Bridges

Use of slab bridges will be limited to a maximum span length of 40 ft. The slab thickness shall be based on design requirements and not on the minimum slab thickness tables found in the LRFD and LFD specifications. See Section 3.2.11 for more information.

2.3.6.1.5 Bearing Type

The Department generally specifies three primary types of bearings. These are elastomeric expansion, fixed, and pot or disc (HLMR). Seismic isolation bearings have been employed by the Department in selected cases. When pot or disc, or seismic isolation bearings are under consideration for selection, the Bureau of Bridges and Structures should be consulted to verify their acceptability.

Section 3.7 contains technical details, policies and procedures for the design of bridge bearings. Most of the typical bearing details for PPC I-beam, Bulb T and PPC deck beam bridges are depicted on the prestressed base sheets. Sections 3.7 and 3.15 contain seismic provisions, details, and policies for bearing design.

The Department typically uses standardized elastomeric bearings in conjunction with standard fixed bearings for non-integral abutment bridges when the expansion length is less than 500 ft. See Figure 3.7.4-4 for guidance. The standard fixed steel bearing used in conjunction with elastomeric bearings is illustrated in Figure 3.7.1.2-1. Longer expansion lengths usually call for the use of HLMR bearings. Structures designed for curvature shall have HLMR bearings at all locations.

Standard fixed bearings and elastomeric bearings are also used on bridges in Illinois which have integral abutments. There also is a standard fixed bearing detail used at integral abutments with steel beams which is presented in Figure 3.7.1.2-2. Generally, if a pier is rigid and the expansion length is long, elastomeric bearings may be considered at the piers of integral abutment bridges. Otherwise, standard fixed bearings are usually specified.

2.3.6.1.6 Bridge Deck Expansion Joints

All expansion joints in decks shall be sealed to prevent deck drainage from penetrating the bridge deck joint openings. The preferred types of sealed expansion joints are strip seals, and fingerplates with troughs. Modular joints may be used in lieu of fingerplates or when the limits for the use of fingerplates are exceeded. Preformed joint seals and neoprene joints have been phased out. The use of the preformed joint seals and neoprene joints should be limited to replacement or extending in-kind situations. Details for the phased out joint systems can be found in Section 3.17.

Section 3.6 contains technical details, policies and procedures for the design of expansion joints. A guide for selection of expansion joint type is presented in Figure 2.3.6.1.6-1. The joint type in the guide is primarily a function of contributing expansion length and skew. Contributing expansion length at a pier shall be defined as the distance between fixed bearings measured along the bridge. At an abutment, the length shall be the distance from the joint to the nearest fixed bearing.

Expansion Joint Limitations

The use and limitations of the various expansion joint devices used in Illinois are as shown in Figure 2.3.6.1.6-1. Strip seals shall be used for bridges with contributing expansion lengths less than or equal to 280 ft. with skews between 0° and 60° with maximum contributing expansion lengths reduced as shown in the figure. Strip seals can accommodate small amounts of curvature as well, but calculations should be made to ensure the strip seal can accommodate differential expansions due to skew and curvature before using them on curved structures. Beyond the limits for strip seals, fingerplates with troughs or modular joints shall be used. A hybrid (swivel) modular joint system designed to accommodate differential non-parallel longitudinal movements shall be used for bridges which are subjected to large lateral loads, are designed for the effects of curvature, and/or have skews greater than 60°.

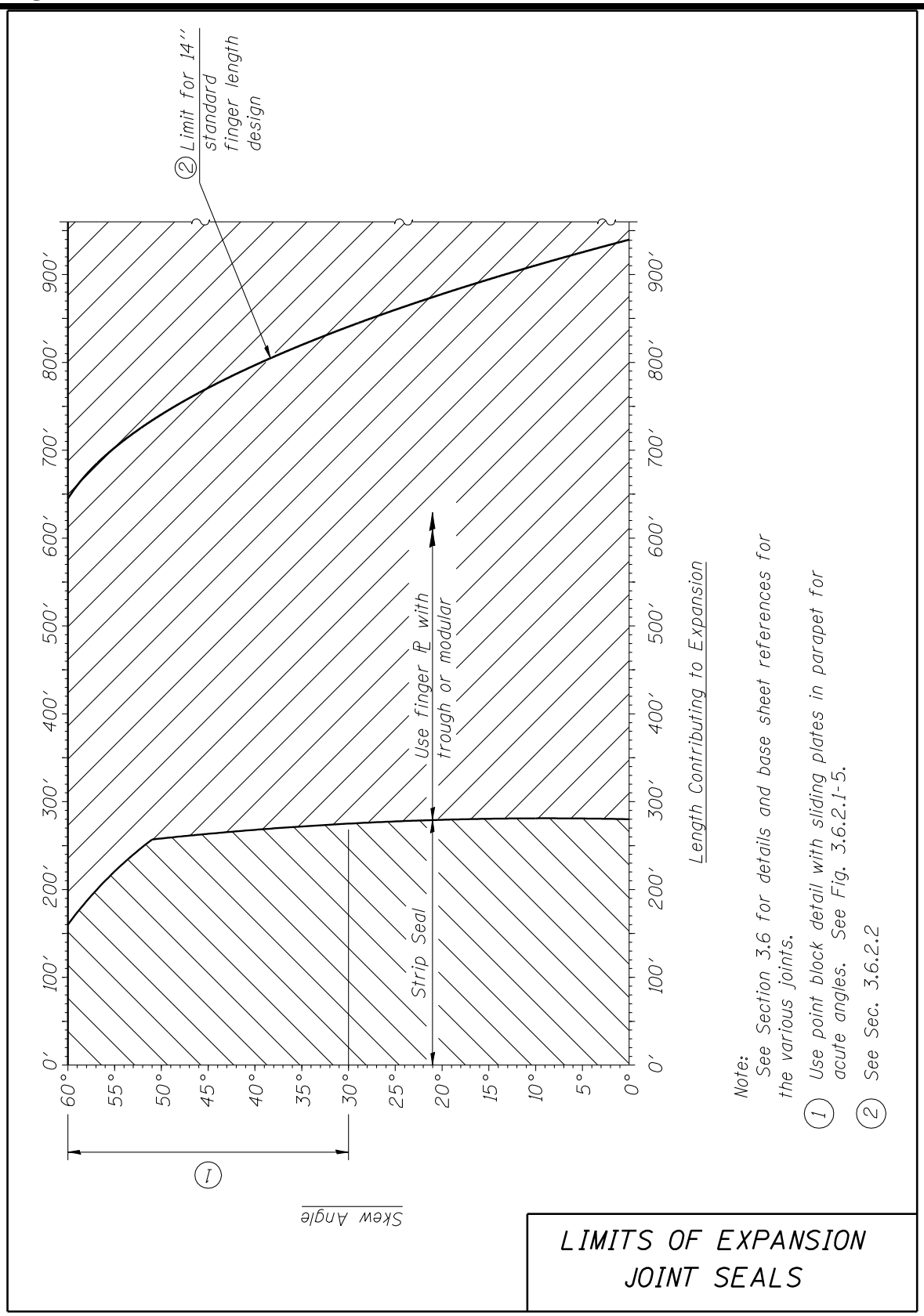

Figure 2.3.6.1.6-1

2.3.6.1.7 Bridge Railing

All new bridge railing configurations, on LRFD or LFD designed projects, shall be shown to be structurally and geometrically crashworthy according to the appropriate Test Level of Section 13 of the AASHTO LRFD Bridge Design Specifications and shall demonstrate acceptable performance through a full scale crash test. Railing systems that have been previously found acceptable under the requirements of NCHRP Report 230, the AASHTO Guide Specifications for Bridge Railings or the AASHTO LRFD Bridge Design Specification are considered as meeting the requirements of NCHRP Report 350 and not required to be crash tested provided they are used for their designated Test Level. The owner is responsible for determining the test level necessary for each application. Railings on all new or rehabilitated bridges on Federal and State routes shall satisfy a minimum crashworthy Test Level of TL-4. The crashworthy Test Level of standard IDOT railing systems are identified in this Section. Maximum post spacing and other design requirements for each rail are located on the Base Sheets.

For structures owned or maintained by the State, railing Base Sheets shall not be altered unless approved by the Bureau of Bridges and Structures. Minor changes may be approved by the BBS provided that the proposed installation does not have features that are absent in the tested configuration and that might detract from the performance of the tested railing system.

Unless there are restrictions due to proximity of entrances or geometric requirements, all bridge railings and parapets shall be extended 15 feet onto the approach pavement. Note that this requirement is waived for curved roadways on straight structures. See Sections 2.3.7.7 and 3.2.12.

The preferred bridge railing is the 34 in. F-Shape parapet detailed in Figure 3.2.4-1. This railing is structurally and geometrically crashworthy according to Section 13 of the AASHTO LRFD Bridge Design Specifications and has been crash tested for a Test Level 4 (TL-4) through a full-scale crash test.

A 42 in. F-shape parapet is detailed in Figure 3.2.4-3. This railing is crashworthy for test level TL-5 and should only be used in the following scenarios:

1. Structures with a future DHV (one way) × % trucks greater than 250.
2. Structures located in areas with high incidences of truck rollover accidents.

3. Structures with a radius of 1000 ft. or less with truck traffic.

The BDE Manual gives guidelines as to when glare screens shall be added to parapets and the Department's Highway Standards Manual provides details for both metal and concrete glare screens. The addition of either glare screen to a parapet shall not be considered as improving or reducing the designated crash worthiness of a parapet. All Base Sheets referenced in this Section can be found on the IDOT internet site for Consultant Resources.

In certain applications, steel railings may be requested by the District or the owner. However, steel railings shall be approved by the BBS for structures on Federal or State routes. Railing posts shall be spaced at equal or nearly equal spaces when possible and shall miss all parapet and deck joints. The preferred steel railing is the Type SM side mounted steel bridge railing which is depicted on Base Sheet R-34HMAWS with a hot-mix asphalt wearing surface or Base Sheet R-34CWS which is depicted with a concrete wearing surface. This railing is suitable for new or retrofit projects and has been crash tested for a Test Level 4 (TL-4) through a full-scale crash test. These two railings are curbless and are therefore desirable on deck beams bridges with low profile grades where ponding due to bridge curbs and parapets is a concern. See Section 2.3.6.1.8 for more information. Also available is Base Sheet R-34CWSC which is the SM steel railing with a concrete wearing surface and a curb. It is a TL-4 railing and intended only for grade separation deck beam structures which are rare. The curb is intended to keep the runoff from hitting the traffic below. The structure requires an adequate longitudinal grade to prevent ponding.

All R-34 series of railings require a connection to a Type 6A Traffic Barrier Terminal as noted on the Base Sheets. To properly attach the terminal, the centerline of the first R-34 post on the structure shall be detailed from 2 ft. – 3 in. to 2 ft. – 9 in. from the end of the bridge deck.

Traffic structures with sidewalks and a posted speed limit greater than 45 mph shall have a barrier in front of the sidewalk similar to Base Sheets R-29 and R-33 and in some cases, at the discretion of the District, a barrier may even be required in front of the sidewalk when the posted speed limit is less than or equal to 45 mph. Traffic structures with sidewalks and a posted speed limit less than or equal to 45 mph shall typically use the standard sidewalk section shown in Figure 3.2.4-8. The metal railing portion of the sidewalk section shown in Figure 3.2.4-8 is detailed on Base Sheet R-20. This combination railing meets the AASHTO Guide Specifications for Bridge Railings and is crashworthy for Test Level TL-4. Standard Base Sheets R-28 and R-32 are additional sidewalk applications on structures with a posted speed limit less than or equal to 45 mph and

they depict pedestrian railings with protective fencing. These combination railings may be utilized upon approval by the District where it is anticipated that a problem with debris or litter being thrown from a structure could cause a hazard to traffic or pedestrian movements below. Both railings are crashworthy for Test Level TL-4.

Base Sheet R-26 (Type TP-1) is a railing for structures with a sidewalk. However, it is only crashworthy for Test Level TL-2 and shall not be used on Federal or State routes.

Railing options for traffic structures with sidewalks and a posted speed limit greater than 45 mph are depicted in Base Sheets R-29 and R-33. These railings should be utilized on all bridges where provisions are made for the specific operation of bicycles. Base Sheet R-29 may also be used as a sidewalk rail for pedestrian traffic provided the sidewalk is protected by traffic railing. The traffic railings on these Base Sheets are crashworthy for Test Level TL-4.

Standard Base Sheet R-30 (Type WT Steel Railing) is a side mounted railing and is crashworthy for Test Level TL-2. The use of this railing shall be limited to isolated repairs of existing Type WT Steel Railings or where a preference is warranted to match the approach guardrail detail.

Standard Base Sheets R-23A and R-24A depict side mounted steel railings. These railings are primarily for use on slab or prestressed deck beam bridges which are widened or reconstructed. The type "S-1" rail shown on Base Sheet R-23A is designed to be used on single span bridges without curbs. The type "T-1" rail shown on Base Sheet R-24A shall be used on multiple span bridges with curbs. These railings are crashworthy for Test Level TL-2 and may not be used on Federal or State routes.

Standard Base Sheet R-31 (Steel Bridge Rail Curb Mounted (2399)) is a TL-4 crash tested curb mounted railing. This railing may be utilized on new bridges or retrofit projects when replacing substandard rail or where eliminating safety walks. The R-31 railing requires a Type 6A Traffic Barrier Terminal as noted on the Base Sheet. To properly attach the terminal, the centerline of the first R-31 post on the structure shall be detailed from 2 ft. – 3 in. to 2 ft. – 9 in. from the end of the bridge deck.

Base Sheets R-35, R-36 and R-37 are aesthetic railings developed from Texas railing details. These railings are crashworthy for Test Level TL-2. Base Sheet R-35 is detailed for girder

supported structures, Base Sheet R-36 is detailed for slab structures, and Base Sheet R-37 is detailed for a sidewalk on a girder supported structure.

2.3.6.1.8 Bridge Deck Drainage

Drainage runoff is caused by precipitation events. Bridges shall be evaluated to determine if drainage scuppers, floor drains, and/or bridge approach slab drains are required to control drainage runoff.

Drainage scuppers and floor drains can have detrimental effects on adjacent bridge superstructure elements. Therefore, drainage scuppers and floor drains should only be provided on a structure when required by design or to reduce the amount of drainage runoff crossing an expansion joint.

Bridge deck drainage should be considered when establishing the profile grade across a structure. Bridge deck drainage should also be considered when establishing superelevation transition locations.

It is desirable that profile grades be established such that the longitudinal grade on a bridge is not less than 0.5%. In certain circumstances, such as near the crest of vertical curves, grades less than 0.5% may not be avoidable; however, efforts should be made to minimize these areas.

Profile grades of less than 0.5% are particularly discouraged for precast prestressed concrete deck beam superstructures with curbs or parapets. These structures typically do not have drainage systems, and ponding of runoff results in premature deterioration of the keyways and beams. However, railings on Base Sheets R-34CWS and R-34HMAWS are curbless and allow flow to run off the side of the bridges. While this method of bridge drainage may be unacceptable in some urban settings or over railroads, it is satisfactory for deck beam bridges in most rural applications.

Typically, the minimum cross slope should be 1.56% ($\frac{3}{16}$ in. per ft.). At superelevation transitions where the cross slope reverses from full crown to full superelevation, care should be exercised to avoid impoundments and to eliminate cross road flow.

See Section 3.2.9 for details of deck drains and drainage scuppers.

Bridge Drainage Scuppers

Drainage scuppers are required on bridge decks wherever needed to prevent gutter flow spread from exceeding traffic lane encroachment limitations. The spread of gutter flow, under a rainfall intensity of 6 in. per hour, shall not encroach on the traveled way more than 1 ft. when the design speed is 50 mph or greater, nor more than 3 ft. when less than 50 mph.

A drainage scupper shall be provided at a distance D_1 from the high point of the bridge deck and subsequent drainage scuppers shall be spaced at distances D_2, D_3, etc. Theoretical values of D_1, D_2, D_3, etc. should be determined with the equations shown in *Drainage Scupper Location by Hydraulic Analysis* and in accordance with the methods presented in Design Guide 2.3.6.1.8 Bridge Scupper Placement.

Drainage scuppers are also required at the bottom of any sag vertical curve and to prevent significant flow from crossing the deck immediately ahead of any superelevation transition. In addition, it is desirable to locate a drainage scupper immediately upgrade from a transverse deck expansion joint.

Free fall drainage scuppers should not be located within 10 ft. from the faces of substructure elements. Where discharge from the drainage scuppers cannot be allowed to fall free to underlying areas, the drainage scuppers should be attached to downspouts or a closed drainage system. Direct downspouts are preferred over a lengthy closed drainage system when either is feasible.

Floor Drains

Bridge decks or portions thereof on vertical tangent grades of less than 0.5% should be provided with standard free fall floor drains spaced at 15 ft. centers. Similar provisions should be made on crest vertical curves with K-values of 167 or greater over the portion of the curve having a grade of 0.3% or less. Crest vertical curves with K less than 167 need not be provided with floor drains. (See equation in *Drainage Scupper Location by Hydraulic Analysis* for the definition of K.)

Free fall floor drains should not be located within 10 ft. from the faces of substructure elements. When free fall drains are not permitted, a special investigation should be conducted to determine

whether to provide special drainage scuppers attached to a closed drainage system, to re-space the drains, or to omit the drains.

Off Bridge Inlets

At bridges on uncurbed highways, approach pavement drains may be required to control roadway slope erosion.

Bridge approach shoulder drains (Highway Standard 609001 or 609006) shall not be used for integral and semi-integral structures. These shoulder drains protrude from the bottom of bridge approach slabs and create additional stresses in the approach slab by restricting thermal expansion and contraction of the slab. The shoulder inlet with curb (Highway Standard 610001) is encouraged as a substitute. These drains may be placed just off the bridge approach slab in the shoulders of the connector pavement. Note that additional scuppers may be needed to address drainage concerns on some bridges to minimize the runoff crossing approach slab/connector pavement interface. The highway standard may require modification for structures with narrow shoulders. When needed, shoulder inlets with curbs shall be specified on TSL plans. Alternate methods of drainage may also be acceptable pending bridge office review and approval.

Bridge approach shoulder drains are still acceptable for bridges with expansion joints at the abutments.

At bridges on curbed highways any gutter flow that would enter the bridge should be intercepted by a roadway inlet immediately ahead of the bridge.

Drainage Scupper Location by Hydraulic Analysis

The number and spacing of drainage scuppers on a bridge deck should be computed from the following formulae. These formulae are applicable to flow in triangular channels. Design Guide 2.3.6.1.8 presents example calculations.

$$d_{max} = \frac{T_{max}}{z}$$

$$Q_{Di} = \frac{0.56z}{n} S_i^{1/2} d_i^{8/3}$$

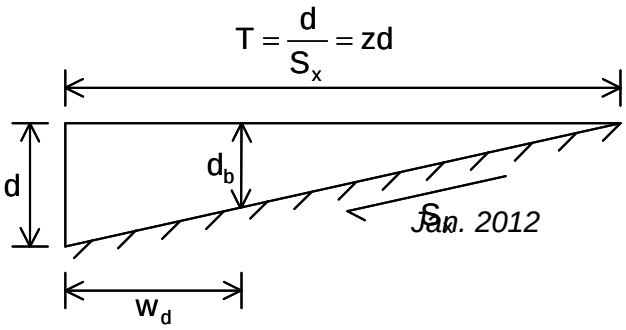

$$D_i = \frac{43560}{CIW} Q_{Di}$$

$$d_i = \frac{T_i}{z}$$

$$d_{bi} = d_i \left(1 - \frac{w_d}{T_i}\right) = d_i - \frac{w_d}{z}$$

$$V_i = \frac{1.12}{n} S_i^{1/2} S_x^{2/3} T_i^{2/3}$$

$$R_{fi} = 1 - 0.09(V_i - V_0) \leq 1.0$$

$$Q_{bi} = \frac{0.56z}{n} S_i^{1/2} d_i^{8/3} (1 - R_{fi}) + \frac{0.56z}{n} S_i^{1/2} d_{bi}^{8/3} R_{fi}$$

$$Q_{TOT\,i} = Q_{Di} + Q_{b(i-1)}$$

$$K = \frac{L}{|g_2 - g_1|}$$

Where:

C	=	runoff coefficient = 0.95
d_{bi}	=	depth of bypass flow, i = 1 to no. of inlets-1 (ft.)
d_i	=	actual depth of flow at curb face, i = 1 to no. of inlets (ft.)
d_{max}	=	maximum allowable depth of flow at the curb face (ft.)
D_i	=	distance from high point on bridge to location of first inlet or distance between inlets, i = 1 to no. of inlets (ft.)
g_1	=	grade of initial tangent (%)
g_2	=	grade of final tangent (%)
I	=	rainfall intensity = 6 (in./hr.)
K	=	vertical curve length coefficient
L	=	length of vertical curve (ft.)
n	=	Manning's roughness coefficient = 0.013 (concrete surface)
Q_{bi}	=	flowrate bypassing preceding inlet, i = 1 to no. of inlets-1 (cfs)

Q_{Di}	=	flowrate from drainage area at inlet, i = 1 to no. of inlets (cfs)
R_{fi}	=	frontal flow capture fraction (equals 1 if $V_0 > V$)
S_i	=	longitudinal slope at inlet*, i = 1 to no. of inlets (ft./ft.)
S_x	=	cross slope (ft./ft.)
T_i	=	actual gutter flow spread at inlets, i = 1 to no. of inlets (ft.)
T_{max}	=	maximum gutter spread (ft.)
		shoulder width + 1 ft. for speeds ≥ 50 mph
		shoulder width + 3 ft. for speeds < 50 mph
V_i	=	actual gutter velocity at inlet, i = 1 to no. of inlets (ft./sec.)
V_0	=	grate splash over velocity (ft./sec.)
	=	2.8 for DS 11, DS 12, and DS 33
		5.8 for DS12M10
w_d	=	width of scupper (ft.)
W	=	width of deck drained (ft.)
z	=	reciprocal of cross slope

*Portions of decks where the longitudinal grade is less than 0.5% shall be assumed to have a grade of 0.5%.

2.3.6.2 Substructure Component Selection

2.3.6.2.1 Abutment Type

Common abutment types fall into three main categories: open, closed, and vaulted. Historically, open abutments have also been referred to as pile bent or spill through. Open abutments include integral, semi-integral and stub. Vaulted abutments are of two types, filled and unfilled. Section 3.8 contains technical details, policies and procedures for the design of abutments. See also Section 2.3.4.5.1 for additional information.

Individual pile encasement shall be provided for steel piles and pile reinforcement shall be provided for metal shell piles at all integral, semi-integral and stub abutments. See Base Sheets F-MS and F-HP for details.

Integral

The preferred open abutment type is integral if the limitations detailed below are satisfied. Use of integral abutments on structures beyond these limitations requires approval of the BBS. Typically, this entails detailed soil/structure interaction studies which prove the acceptability of a proposed design.

Traditionally, bridges are designed with expansion joints and other structural releases that allow the superstructure to expand and contract freely with changing temperatures. Integral abutment bridges eliminate expansion joints in the bridge decks, which reduces the initial construction cost as well as subsequent maintenance costs. The use of integral abutment structures is permitted within the following limitations:

1. Maximum skew is 30°.
2. Total length (along centerline) for steel structures is 310 ft. maximum.
3. Total length (along centerline) for concrete structures is 410 ft. maximum.
4. All structures shall be built on a tangent alignment or built on a tangent (no curved girders).
5. Abutments and piers shall be parallel.
6. Foundation shall consist of a single row of vertical H-piles or Metal Shell (MS) piles.
    a. For bridge lengths up to 90 ft., H-piles, 12 in. MS piles and 14 in. MS piles are permitted.
    b. For bridge lengths between 90 and 200 ft., H-piles and 14 in. MS piles are permitted.
    c. For bridge lengths between 200 and 410 ft., H-piles are permitted.

Standard integral abutment detailing is illustrated in Section 3.8.3. Abutment depths should not be made deeper in an effort to shorten the structure and comply with the length limitations.

When integral abutment foundation limitations are exceeded, semi-integral or stub abutments should be used. These can be supported by either spread footings, drilled shafts or piles below a concrete cap block. See Sections 3.8.4 and 3.8.5 for details.

Semi-Integral

Semi-integral abutments may be applicable for new construction when piles are battered, set in rock, or have multiple rows. Other cases where this type could be appropriate include use of drilled shaft foundations and those supported by spread footings. All of these foundation types

prohibit the use of integral abutments. Generally, bridges with lengths greater than 130 ft. should be planned with similar abutment types on both ends. These projects should be considered on a case-by-case basis, and the Bureau of Bridges and Structures should be contacted for approval.

See Sections 2.4.2.3, 3.8.4, 3.8.5 for detailed information concerning semi-integral and other open abutment types such as stub.

Closed

Closed abutments are typically cost prohibitive, particularly in stream crossing situations. Therefore, their use should be documented by an economic analysis. There are instances where closed abutments are feasible such as railroad bridges and urban areas where right-of-way is limited for end slopes, thus ruling out open abutments.

Vaulted

Vaulted abutments are partially closed and open as they are located in a stable end slope behind where a closed abutment would be placed to allow a shorter end span than open abutments. Vaulted abutments are typically used on grade separations and interchanges. Use of this abutment type shall be coordinated with the BBS.

2.3.6.2.2 Pier Type

The number, type and location of piers are determined in such a manner as to produce optimum bridge economy and safety within the constraints of vertical and horizontal clearance requirements, stream flow requirements and aesthetics. Bridge piers and bents are generally separated into three main groups.

1. Individual Encased Pile or Drilled Shaft Column Bents
2. Solid Wall Encased Pile or Drilled Shaft Bents
3. Footing Supported Piers

Individually encased pile bents consist of a single row of piles in which each pile is individually encased in a column of concrete and supports a pier cap beam. Individual drilled shaft column bents appear and act in a similar manner as individually encased pile bents. Where required for

hydraulic purposes, individual piles or shafts may be encased in a solid wall of concrete (referred to as a solid wall encased bent). A web walled drilled shaft bent pier is more economical and should be substituted for an encased drilled shaft bent pier unless a smooth pier face is required. Footing supported piers may be composed of multiple rows of piling, one or more rows of drilled shafts or spread footings on rock or soil. Pier stems extending from the footing may be solid walls, walls with cantilever extensions (hammerheads), or may consist of a multi-column frame mounted on a "crashwall" which supports a pier cap beam.

Special considerations should be given to pier design in regions of the State with moderate to high seismicity (See Section 2.3.10). Multiple round column frame piers are preferred for the resistance of earthquake loadings. The columns could be supported by a footing with steel piles or drilled shafts. Multiple round column bents are considered optimal for design which considers extreme lateral forces in two orthogonal directions.

Sections 3.9 and 3.10 contain technical details, policies and procedures for the design of piers. Detailed seismic considerations for pier design and analysis are presented in Section 3.15.

Piers on Footings

General proportions for grade separation piers are shown in Figures 2.3.6.2.2-1, 2.3.6.2.2-2 and 2.3.6.2.2-3. The ratios given in Figure 2.3.6.2.2-2 should be used with caution for any extreme heights. In all cases, a scale drawing should be made so that the pier's true proportion can be visualized. Crash walls typically have rounded ends, but may be made square to accommodate issues such as aesthetics or guard rail attachments. The piers in Figure 2.3.6.2.2-1 should be used with integral, stub or other open abutments. Figure 2.3.6.2.2-2 should be used when an aesthetic option is needed at a particular location. The piers in Figure 2.3.6.2.2-3 should be used with vaulted abutments.

On typical stream crossings, the solid piers shown on Base Sheets P-1, PB-1 or PC-1 can be used. The sides of solid piers shall be straight, except, when required by design, the sides shall be battered. The minimum width at the top of a solid pier shall be 2 ft. – 0 in. If the bearing seat requirements are such that more than 2 ft. – 0 in. in width is needed, consideration should be given to the use of a hammerhead grade separation pier or a modified hammerhead pier such as that shown on Base Sheet P-10. The ends of pier stems shall be rounded when located in a main

stream. Different pier types should be considered at bridge sites which lend themselves to special architectural treatment.

All piers on grade separation structures shall be equipped with a crashwall which extends 4 ft. – 0 in. minimum above the ground. The top of the crashwall shall run continuously level. Figure 2.3.6.2.2-4 illustrates the crashwall criteria for railroad crossings and grade separations.

Section 3.9.3.7 contains policies and procedures for the design of new grade separation piers subject to vehicle collisions. The vehicle collision requirements of LRFD Article 3.6.5 shall be applied to new grade separation piers unless the piers are protected by TL-5 barriers or placed outside the clear zones. A cost benefit analysis is recommended prior to implementing either option. Retrofitting of existing piers to meet the vehicle collision requirement of LRFD Article 3.6.5, will not be required.

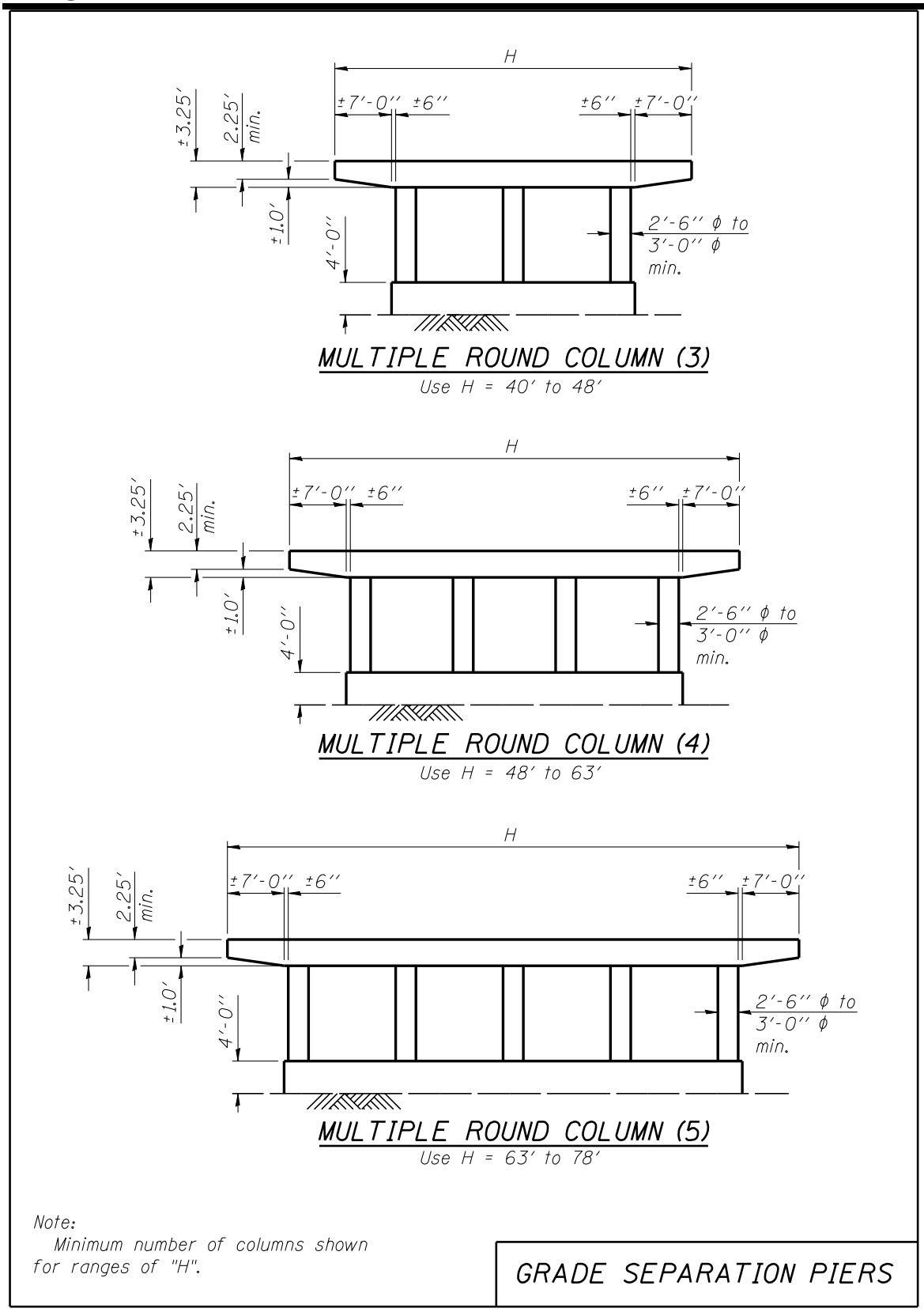

Figure 2.3.6.2.2-1

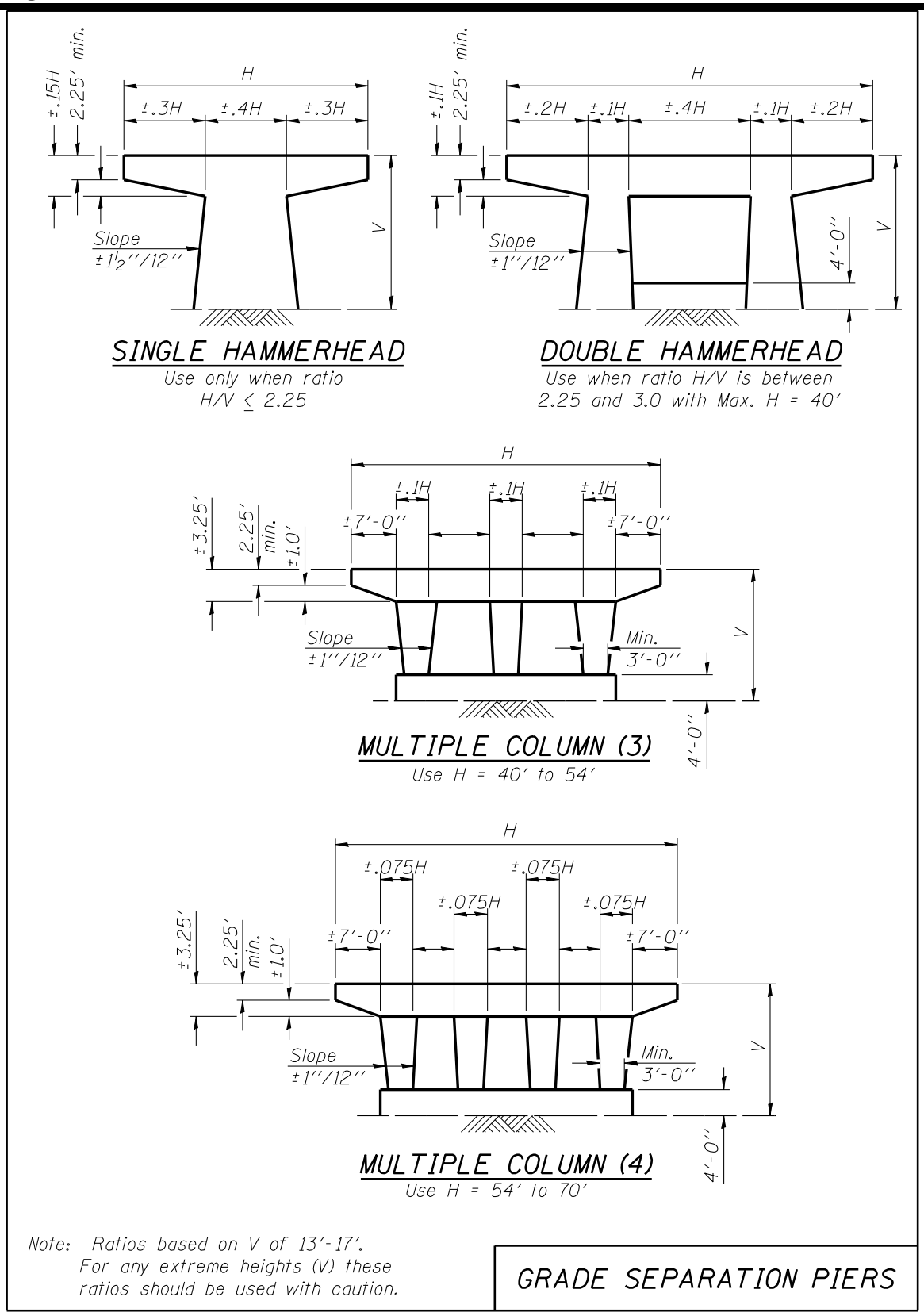

Figure 2.3.6.2.2-2

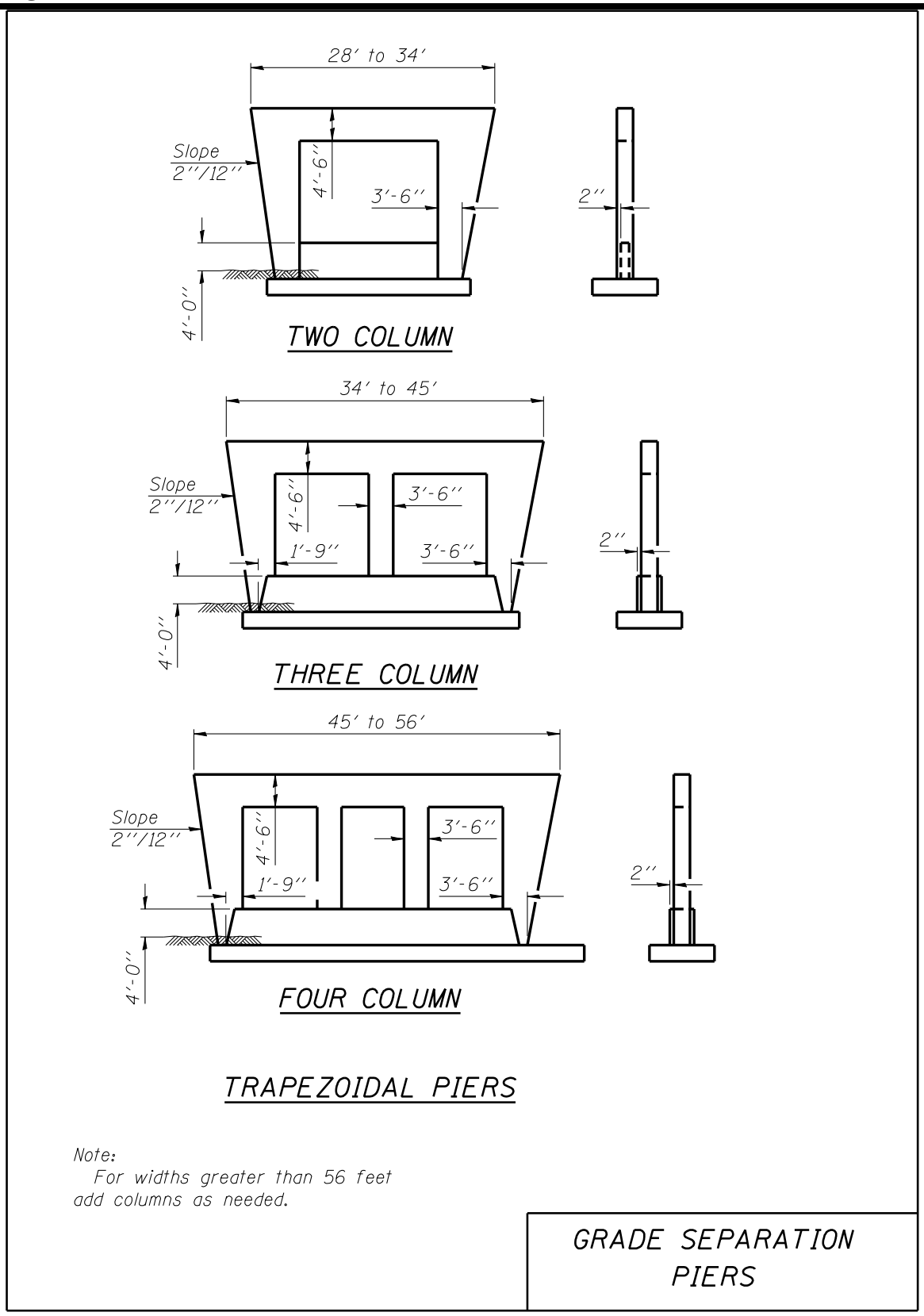

Figure 2.3.6.2.2-3

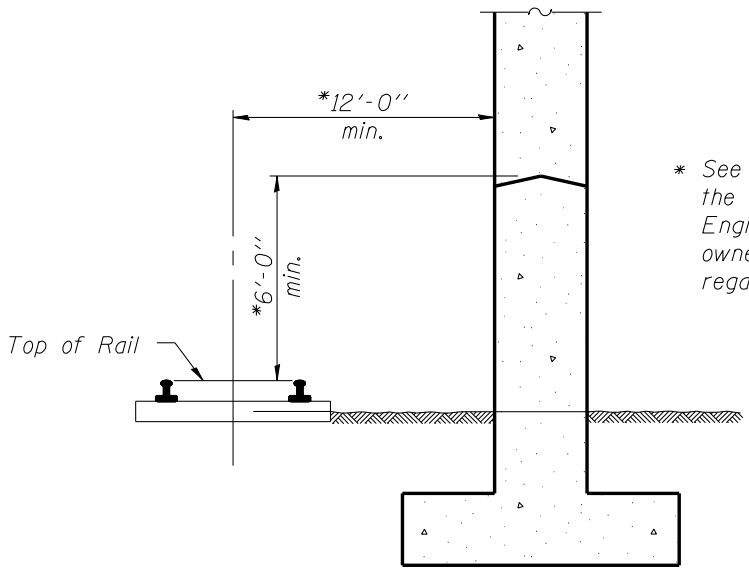

* See chapter 8, Article 2.1.5 of the "AREMA Manual for Railway Engineering". Contact Railway owner for additional policies regarding crashwall height.

CASE I
ADJACENT TO
RR TRACKS

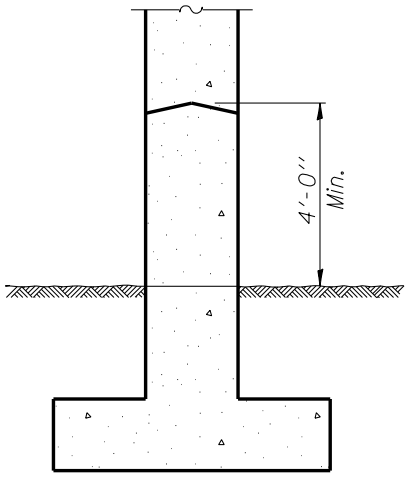

CASE II
GRADE SEPARATIONS

HEIGHT OF CRASHWALL
OF MULTI-COLUMN PIERS

Figure 2.3.6.2.2-4

Individually Encased Bent Piers

Individually encased bent piers are primarily used at stream crossings where the potential for the collection of debris and ice is not a concern. Individual pile encasements are primarily intended to provide corrosion protection of steel piles and not to prevent pile damage and waterway blockage due to the collection of debris and ice. The District should be consulted prior to the use of this pier type. For individually encased bent piers, individual pile encasements within channel bank limits shall extend 2.5 ft. below the streambed elevation. Beyond channel bank limits, individual pile encasements for individually encased bent piers shall extend 2.5 ft. below the ground line. Non-encased piles may only be used under special circumstances (such as unmarked routes, etc.) after discussion and concurrence with the Bureau of Bridges and Structures. Example cases for which encasement is not required include when a precast pile is specified, when a corrosion reduced cross section is used in design, or when a corrosion protection system such as paint, galvanization, etc. is utilized. This pier type can also be used at locations without water such as overbank piers.

Individual column drilled shaft bent piers typically provide the most economical alternative when small single row drilled shafts foundations are recommended. They are commonly used at stream crossings where debris collection is not a concern. The top of the drilled shaft shall be shown on the TSL to be located 1 ft. above the Estimated Water Surface Elevation (EWSE) (see Section 2.3.6.4.2). If aesthetics allow, permanent casing may be specified to simplify construction of the shaft through the water to above the EWSE. If the appearance of permanent casing is undesirable, construction of the shaft through the water to above the EWSE can be completed with a removable form system. If the removable forms system exceeds 10 ft, a permanent casing shall be specified to make up the difference. Although the pier Base Sheet P-DS is detailed for a pier located in water with no permanent casing, permanent casing can be added, or the Base Sheet modified for use at piers without concerns for water such as overbank piers or grade separations where a crashwall is not required.

Solid Wall Encased Bent Piers

Generally, solid wall encased bent piers are utilized at stream crossings to prevent pile damage and waterway blockage due to the collection of debris and ice. The following guidelines shall be followed for using solid wall encased pile bent piers on stream crossing structures.

Unless otherwise approved by the District, piers located within 25 ft. of the channel bank limits, including piers within the channel itself, shall have a solid wall encasement which extends to 2.5 ft. below the current stream bed elevation. Since the concern for debris collection is minimal outside of these limits, any remaining piers located beyond these limits should be individually encased bent piers with the individual encasements extending 2.5 ft. below the geound surface. Pile bent piers shall not be used on the major river crossings listed below:

1. The Mississippi River
2. The Ohio River
3. The Illinois River
4. The Wabash River
5. The Rock River
6. The Navigable reaches of the Des Plaines River

Solid wall encased drilled shaft bent piers may be used at locations requiring a solid wall encasement pier when the use of piles or spread footing foundations is not feasible or economical. This pier type uses small diameter drilled shafts with permanent casing which will be covered by the solid wall encasement. The drilled shaft diameter shall be shown at least 1 ft. less than the encasement width to accommodate shaft construction tolerances. Since the encasement width limits the shaft diameter, more shafts are normally required, which causes this shaft supported pier type to be more costly than the web wall drilled shaft bent pier discussed below. When the EWSE indicates water is expected to contact substructure concrete, the use of a cofferdam may be warranted. See Section 2.3.6.4.2 for descriptions of the types of cofferdams to be used. Base Sheet P-DSSW provides a construction sequence and other pertinent information.

Column-Web Wall Drilled Shaft Bent Pier

Column-web wall drilled shaft bent piers are preferred in lieu of solid wall encased shafts where possible. This pier type is less expensive than the solid wall encased drilled shaft bent pier because it involves less concrete, labor and time to construct. The lower web wall is only connected to the upper web wall (not the shafts). Consequently, the upper web wall should extend to 5 ft. above the lower web wall or to the project's Design High Water Elevation, whichever is greater. The use of this pier type without Cofferdams is limited to locations where six feet or less of water above the base of the web wall, as indicated by the EWSE, is expected at the pier location. Cases with more than six feet of water will require the use of a cofferdam. Base Sheet P-DSWW provides a construction sequence and other information.

Transfer Beam Drilled Shaft Bent Pier

Transfer beam drilled shaft bent piers are most suitable when the design loading (vessel impact, ice, seismic, etc.) requires more strength, stiffness, and redundancy along the axis of the pier. The transfer beam also provides additional construction tolerances to facilitate incorporation of out-of-plan location shafts which are more likely in deep water shaft installations. Permanent casing can avoid the need for a cofferdam, provide a form through deeper water sites and add protection against stream abrasion. However, since the casings will remain below the beam, aesthetics and debris collection may require other pier types or special modifications to address these issues. Base Sheet P-DSTB provides more details on this pier type.

Crash Wall Drilled Shaft Bent Pier

Crash wall drilled shaft bent piers are normally used at grade separations where the proximity of the adjacent roadway or railroad traffic dictates the use of a crashwall. Since the crashwall is not acting as a footing, it can typically extend just 2 ft. below the finished grade. The crashwall pier can also be used in locations requiring added strength, stiffness, and redundancy along the axis of the pier. In cases where the shaft diameter causes the crashwall width to increase excessively, a wider grade beam may be located below the thinner crash wall to connect it to the larger shafts. Reference Base Sheet P-DSCW for more information.

2.3.6.3 Foundation Component Selection

2.3.6.3.1 Foundation Type

There are three basic kinds of foundations used for bridges and structures. These are piles, drilled shafts and spread footings. Piles are the most commonly used foundation type for bridge construction. Piles are usually selected when the foundation soil conditions are not sufficient to support a spread footing and drilled shafts are found to be either too expensive or incompatible for a specific structure.

Drilled shaft foundations are specified to address vertical and lateral load capacity concerns resulting from large scour depths, high seismic loadings, potential liquefaction, low soil strengths and inadequate pile embedment. There are six Departmental Base Sheets for drilled shafts which can be employed for various situations. See Section 4.2 for details.

Spread footings can be the most economical foundation type when the soil or rock at a site is sufficient to carry the design loads.

Section 3.10 and the IDOT Geotechnical Manual should be referenced for detailed technical information concerning the design of foundations. Note, however, that a large portion of the foundation and geotechnical engineering required for a project is contained in the Structure Geotechnical Report (SGR) which is completed during the TSL development phase. The foundation type selected from the three primary categories shall consider the geotechnical issues contained in the SGR, the anticipated cost impact on the project, and structural design feasibility. The most appropriate foundation type shall be shown on the TSL plan.

Geotechnical Issues and Recommendations

A separate SGR shall be completed for each TSL and submitted to the BBS with the TSL plan to assure that all the geotechnical issues have been evaluated and properly addressed. Note that the approval processes for the TSL and SGR are concurrent. The purpose of the SGR is to identify and communicate geotechnical considerations to the planner and provide foundation design recommendations to the designer so they may be incorporated in the contract documents. In some cases, a design phase geotechnical memorandum may be required while simple TSL's will not require an SGR. The IDOT Geotechnical Manual and All Geotechnical Manual Users Memorandum (AGMU) 12.0, provides policy and guidance on the content and need for an SGR.

Piles

When the SGR either recommends or recognizes that a pile supported foundation may be viable, guidance is provided on which pile types are considered feasible, given the soil profile, the range of anticipated axial pile loadings, and embedment necessary to develop fixity. IDOT allows construction with four basic pile types. These are steel H-piles, metal shell, precast concrete, and timber. Steel H-piles and metal shell piles are, by a large margin, the most commonly used pile types within the basic group of four. The engineer responsible for development of the TSL shall utilize the SGR to select the feasible pile types along with their associated lengths, resistances and treatments, conduct preliminary computations to determine the various potential piling-substructure configurations that may be feasible, and perform a cost evaluation to determine the most appropriate pile type to be shown on the TSL plan. Often times, the SGR also contains site specific soil-structure interaction analyses for various pile types considered feasible to assist the planner in preliminary analyses as well as the final designer in assessing the relationship between lateral pile loading, deflection, and developed moment.

Structure or substructure type, or other circumstances may dictate that certain pile types be specified. Examples include integral abutments, pile bent piers, seismic applications, structure demands for ductility, and requirements for combined bending and axial strength. It is also not uncommon that the anticipated vertical loading level may be in a range which eliminates lower capacity pile types.

Metal Shell Piles: Metal shell piles should typically be considered during the pile type selection process. They offer many advantages including a relatively low installed cost, availability in several diameters and wall thicknesses, are easily spliced, and allow inspection after driving. The 12 in. Metal Shell with 0.179 in. wall provides a cost effective section which has shown the ability to withstand driving stresses in medium-dense or stiff foundation soils. When harder soils are present, successful use of this pile size may still be possible when a lower Nominal Required Bearing can be specified. In some soil profiles, pre-coring of the pile locations will allow use of this pile size. When very dense or hard layers are present, or when higher Nominal Required Bearings are necessary, the 12 in. Metal Shell pile with 0.25 in. wall can be selected to provide added strength in order to penetrate difficult layers without damage. The higher Nominal Required Bearing for this pile size can be particularly useful when scour, liquefaction, or downdrag reduce the factored or allowable resistance available to support factored or service loadings

applied from the structure. It may also be selected when lateral loading mandates more capacity than that offered by the smaller wall thickness metal shell.

When the Nominal Required Bearing specified exceeds that available by the 12 in. metal shell piles, a 14 in. Metal Shell pile with 0.25 in. walls can be selected. This larger diameter will also result in shorter pile lengths than 12 in. piles which can provide cost advantages in some cases. In soft/loose soil profiles, the 14 in. may be required to keep the pile length from extending beyond the limits of the subsurface exploration. In stiffer/dense deposits, the 14 in. Metal Shell pile with 0.312 in. walls offers higher resistance to driving damage but this is, to some extent, partially offset by increased end bearing and skin friction resistance which can result in continued risk of either pile installation damage or concerns for inadequate penetrations to develop lateral fixity. This pile type allows the use of a reinforcement cage which increases flexural capacity, allows for anchorage of the pile to the substructure or footing, and provides added corrosion protection in addition to the shell.

In recent years, the lead time required to obtain steel H-piles has significantly increased due to the decreased number of annual rollings and a reduction in domestic mills. This has caused delays and forced contractors to place orders prior to driving test piles. Metal shell piles have multiple in-state suppliers who can fabricate and deliver piling in a more timely fashion in most cases. On projects where both pile types could be utilized and delays in construction could be problematic, metal shell piles should be given preference over H-piles when selecting TSL pile type.

Steel H-Piles: Steel H-piles (which are almost exclusively HP sections, but may also include other structural shapes) are typically chosen when the nominal required bearing is larger than that of other pile types or when the expected subsurface conditions could cause damage to other pile types. They also have significant lateral load or moment capacity which makes them well suited for applications which require ductility such as for bridges located in moderate to highly seismic regions.

When the estimated tip elevation of the pile is within 20 feet of the bedrock surface, H-piles extended to bedrock and driven to their maximum nominal required bearing are often selected for several reasons. First, the higher available resistance can allow the number of piles to be reduced which results in a net savings despite having to increase the pile length into rock. Second, the risk of driving damage as bedrock is approached is minimized with H-piles. And finally, H-piles

driven to bedrock typically require fewer test piles than other pile types which results in cost savings.

When bedrock is not an issue, H-piles may not be the most cost effective choice when the loadings and subsurface conditions permit the use of other pile types, such as metal shells. This is because an H-pile has a lower soil volume displacement resulting in a lower total resistance and thus longer pile lengths. Also, required lengths for H-piles are difficult to estimate and cost overruns are common for friction H-piles. However, for piles driven in closely spaced multiple rows, the cumulative soil displacement and densification that might occur in some soils may still require that H-piles be used.

Precast Concrete Piles: This pile type requires special techniques of handing and shipping to avoid damage or excessive stresses. Splicing for additional length or cutting piles to plan elevations can be problematic and, in some cases, is not permitted. However, precast piles do provide some advantages over more common piles and in some applications provide cost savings or structural and aesthetic advantages. They offer excellent corrosion resistance and thus do not require individual pile encasement at pile bent piers or below abutment substructures. Precast-prestressed piles do not require epoxy coated bars and should be selected over precast piles when the subsurface driving conditions are more demanding.

Timber piles: While cutting this pile type is relatively easy, several concerns exist with regard to driving and splicing timber piles. There is an added need to accurately and conservatively estimate the pile length as well as order lengths correctly. The piles' low maximum Nominal Required Bearing also limits the locations which would permit use of timber piles. Untreated timber piles are not recommended for most permanent State maintained structures, although they may be cost effective for temporary foundation support or for other structures with a short design life. Untreated timber piles have been seen to last many years when they are installed in permanently saturated soils (not subject to wetting and drying cycles). However given the common soil/air/water conditions present at most sites and the added durability of a treated timber pile or other pile type, their use is extremely limited.

TSL Specification: The TSL plan shall specify the general pile type (steel H, metal shell, precast concrete, or timber) to be used at each foundation location. Since it is not possible for the engineer responsible for the development of the TSL to accurately check every load combination using the final pile spacing, size and group configuration for both lateral and vertical loadings, the

structural engineer responsible for the final structural plans design will select the final pile size that best satisfies the SGR, TSL and structural design requirements. In cases where project specific conditions mandate further pile specification, the TSL shall further indicate those limitations. These typically included:

1. Indicating HP to eliminate the use of W sections
2. Indicating minimum HP depth (such as Min. HP10 or Min. HP12 etc.) when required by the SGR or by substructure type limitations
3. Specifying Metal Shell Diameter or thickness (such as 14" metal shell, or metal shell with 0.25" walls, etc.) when required by the SGR or by substructure type limitations
4. Indicating Prestressed to eliminate Precast
5. Indicating Treated to eliminate Untreated
6. Indicating "Set in Rock" when driving will not obtain adequate lateral capacity
7. Cofferdams (Type 1 or Type 2), and Seal Coat if required

Drilled Shafts

When the SGR recognizes that a drilled shaft foundation may be viable, the engineer responsible for the TSL development shall compare the various feasible foundation type alternatives to determine if drilled shafts are the most cost effective. Shafts may also be the most appropriate foundation type based on structural feasibility analyses, physical site limitations or subsurface conditions.

If rock or dense soils prevent driven piles from obtaining sufficient embedment to develop fixity, drilled shafts may be selected to ensure adequate foundation depth into appropriate subsurface materials. When rock is present but too deep for the economical use of spread footings (considering stage construction, R.O.W. excavation support requirements, etc.), drilled shafts extending into rock may be the most cost effective foundation type.

Shafts are also preferred over spread footing foundations when the subsurface information indicates a highly sloping, irregular, or very poorly defined rock surface. In these cases, the plan footing elevation often must be lowered during construction to satisfy the plan minimum footing rock embedment or assure the entire footing bears on uniform non-weathered rock as encountered. Lowering the elevation results in cost increases for rock excavation as well as concrete costs and can delay construction if modified rebar quantities/lengths or redesign is

required. The use of drilled shafts at these sites allows for an easier extension or shortening of the shaft rebar cage and results in fewer changes in foundation costs as only the shaft quantity in soil, not the embedment in rock, is typically affected.

Drilled shafts should also be considered if noise caused by driving pile operations has been determined to be unacceptable. Vibrations caused by pile driving can cause damage to buildings or other infrastructure in some cases and necessitates the use of drilled shafts. Limited overhead clearance, proximity of power lines as well as other physical site limitations often causes problems with pile driving, in which case special drilled shaft equipment may be required to address these constraints.

Drilled shaft foundations can be used when concerns exist for potential high loadings, such as earthquake, stream flow/debris and vehicular or vessel impact. They can also be designed to perform well at sites with a lack of resistance due to large anticipated design scour, substantial liquefaction, or very low soil strengths. Compared to piles, drilled shafts provide significantly higher lateral resistance which makes them a viable foundation option when these loading are present.

Piers located near or in deeper stream waters supported by drilled shafts may require a cofferdam (as would other foundation types) for proper construction. Howeverm some drilled shaft supported pier types can be constructed with removable forms to avoid the expense of cofferdams when the EWSE is within the limits covered in Section 2.3.6.2.2. Permanent casing can also be used to facilitate construction in deeper water and avoid cofferdams, but the added expense and aesthetic impact of exposed steel should be evaluated.

Guidance should generally be provided in the SGR and design phase geotechnical memorandum on side and/or end bearing resistance. When the shafts are to extend to rock, the estimated top of rock elevations should be provided in the SGR so they may be included in both the TSL and Final plans. Although less common, shafts may not extend to rock, in which case they utilize both end bearing and side resistance. Shafts located in granular deposits below the water table are least attractive due to the added expense of maintaining shaft excavation support and placing concrete below the water table by tremie or pump. In contrast, shafts terminating in cohesive soils can be more easily drilled, may not require excavation support, and typically can be dewatered to allow concrete placement. When recommended in the SGR and determined to be cost effective, a bell (or enlarged base) may be utilized to maximize the end bearing resistance

when cohesive soils exist within the height of the bell. Permanent casing should not be specified as a temporary construction aid, since drilling slurry or temporary casing can be used at the Contractor's option.

As described in Section 3.10 and indexed in Section 4.2, there are six drilled shaft Base Sheets used for abutment and pier applications (P-DS, P-DSWW, P-DSSW, P-DSTB, P-DSCW, and A-1-DSD).

TSL Specification: The TSL plans shall indicate the foundation type (Drilled Shafts) and include the following information, as appropriate, at each foundation location:

1. Bottom of footing, abutment cap or pier encasement elevation.
2. The "estimated top of rock" elevation (when shafts will extend to rock).
3. Approximate bell or tip elevation (when shaft will not extend to rock)
4. Note "Number, diameter and depth of shafts to be determined in design"
5. Minimum number of shafts per bent (only when required)
6. The estimated water surface elevation (if located at a stream crossing)
7. Permanent Casing, removable forms, or Cofferdam (Type 1 or Type 2).

The designer should not show temporary casing on the TSL or Final plans. The contractor is responsible for using temporary casing, drilling slurry or other systems to maintain the shaft excavation support per the IDOT drilled shaft specifications. The contractor's installation procedure is reviewed and approved by the Department and further adjusted by the contractor to fit the subsurface conditions encountered.

Additional guidance is provided in Section 3.10 on drilled shaft feasibility and design requirements.

Spread Footings

When the SGR recognizes that a spread footing foundation may be viable, the factored (for LRFD design) bearing resistance, the corresponding footing elevations, and other recommendations should also be provided to aid the engineer responsible for developing the TSL plan in determining if it is the most appropriate foundation type.

Spread footings are most commonly found to be a cost effective foundation type when fairly level or easily excavated rock is present within a reasonable distance from the existing ground surface. Spread footings may also bear on soils when the calculated resistance and service settlements are acceptable for the applied loadings and structure type. A cost and feasibility analysis shall be conducted using preliminary loadings to verify that the resulting approximate footing size is reasonable and cost effective (considering staging, site excavation constraints and ground water level).

For cost estimates and excavation feasibility evaluations, closed abutment footing widths can be estimated to be between 0.5 and 0.6 times the distance from the crown to the bottom of the footing for which ½ the width is behind and ⅓ is in front of the stem. Bridge pier spread footing widths should be estimated using preliminary loadings and bearing capacity/eccentricity feasibility analyses.

The bottom of spread footings should be located a minimum of 4 ft. below finished grade unless solid rock is encountered. This should, in most cases, preclude concern for frost heave, and provide some tolerance for erosion as well as future utility or other temporary excavations. At stream crossings, spread footings may only be used when embedded in rock and located below the design scour depth.

When selecting an approximate footing elevation, reasonable interpretations and extrapolations between all available boring data are critical such that, upon excavation, the encountered rock or soil deposit will likely have a relatively uniform stiffness throughout the entire footing area. The SGR should provide assistance on selecting an appropriate elevation and bearing resistance.

The IDOT Geotechnical Manual, FHWA-IF-02-054 “Shallow Foundations”, and the AASHTO Standard and LRFD Specifications should be referenced when evaluating the feasibility of spread footings. Bearing capacity, eccentricity limits, sliding, and settlement are the primary geotechnical considerations.

Using possible footing elevations and sizes, the factored (LRFD) equivalent uniform bearing pressures applied to the foundation soils or rock shall be calculated to assess feasibility. The SGR should provide factored bearing pressure resistance values and other footing recommendations. If the bearing resistance values in the SGR are not sufficient to carry the applied bearing loadings, the foundation soils should be evaluated to determine if some type of

ground modification can be used to increase the bearing resistance at a reasonable cost. The SGR may contain recommendations on ground modification, and, if not, the geotechnical engineer should be contacted and the SGR modified prior to selecting spread footings as the most appropriate foundation type. When the added cost to improve foundation soils is less than the cost of changing to piles or drilled shafts, spread footings may be specified assuming all other geotechnical design considerations can be addressed.

In cases where the bearing resistance is relatively high compared to the applied moments and lateral loading, the eccentricity limitations may control the footing size and thus should be checked during the feasibility analysis. The eccentricity limitations require that the vertical resultant be located at an acceptable offset from the center of the footing as specified in AASHTO. Generally, increasing the footing widths to reduce vertical resultant offset (eccentricity) to within AASHTO limits minimizes footing uplift and assures a reasonable factor of safety against overturning. The criterion changes when the footing is placed on soil as compared to rock.

In most cases, the passive resistance of the soil in front of spread footings is not included when evaluating sliding. Some weak cohesive soils can have problems developing adequate sliding resistance in which case shear keys should be considered. In granular soils however, they are commonly not needed and can be difficult to construct. Spread footings on rock are normally placed some distance below the rock surface to ensure that, upon excavation, the entire footing will bear in competent rock. When added sliding resistance is desired, a minimum embedment in rock can be specified. If a footing is to be placed on shale, a six inch thick “mud slab” or “seal coat” concrete is normally specified to maintain the deposit’s integrity and assist in ensuring sliding resistance.

When spread footings are to be located on rock, settlements do not normally need to be evaluated since they are expected to be less than ½ in. which is tolerable for most bridge configurations used by IDOT. Conversely, spread footings placed in soil deposits shall be evaluated for settlement to assure that the amount of vertical deflection expected is within the tolerance and serviceability of the structure being supported. As a general rule, spread footings may be susceptible to excessive settlement when 1) the footing is located in recently placed cohesive embankment, 2) new fill is being placed adjacent to or above the footing, 3) the moisture content of the foundation soils exceeds 18%, or 4) the equivalent uniform bearing pressure applied exceeds either 1½ times the existing overburden (current vertical loading) soil pressure or 1½ times the unconfined compressive strength. In some cases, ground modification may provide a

cost effective means of decreasing settlement to a point that would allow the use of spread footings where piles or drilled shafts would otherwise be necessary.

The approach slab is supported on an approach footing which acts as a spread footing foundation. Thus, the foundation soil conditions should be evaluated for bearing capacity, settlement, etc. during the TSL phase.

TSL Specification: The TSL plans shall indicate the foundation type (Spread Footing) and include the following information, as appropriate, at each foundation location:

1. Approximate bottom of footing elevation
2. The "estimated top of rock" elevation (when placed in rock)
3. Note "Footing elevation, width, and other proportions to be finalized in design"
4. Any minimum embedment in rock or shear keys proposed.
5. The Estimated Water Surface Elevation or EWSE (if located at a stream crossing)
6. Cofferdams (Type 1 or Type 2), and seal coats if required

Additional guidance is provided in Section 3.10 on spread footing feasibility and design requirements. See also Section 3.11 for the design requirements of CIP and MSE walls which are often supported by spread footing foundation soils.

2.3.6.3.2 Scour Consideration and Design Scour Table

The most common cause of bridge failure is foundation and structural instability resulting from excessive removal of stream bed soils (scour) during major flood flow events. This multidisciplinary concern requires the engineers responsible for hydraulic evaluations, geotechnical/foundation analyses, and structure TSL planning to work together to determine the appropriate design scour depths, strategically locate the substructures and design the foundations to withstand the design flood.

Scour Estimation at Bridges

The Hydraulic Report provides the initial theoretical scour calculations for the 100 year event (Q100) and 500 year event (Q500). These normally consider the cumulative effects of long term aggradation/degradation, general contraction scour and local pier scour. Analyses may be

completed at an early stage in the project using a specific set of assumed parameters including pier width, shape, foundation configuration, soils information, opening area, bridge skew, and others. If these or other key parameters affecting scour are modified during the development of the TSL plan, the hydraulics engineer should be contacted to determine if the calculated scour depths need to be recalculated. Refer to Chapter 10 of the Drainage Manual for more details on scour calculation methods.

The Hydraulic Engineering Circular HEC-18 based scour equations contained in the Hydraulic Report are primarily derived from empirical laboratory research in sand. The local scour equations at piers are specifically for live-bed scour in cohesionless sand-bed streams. Consequently, for some cohesive soil or rock deposits, HEC-18 based scour depths may be excessively deep since they do not account for the increased scour resistance which exists in some non-granular streambed conditions. The Structure Geotechnical Report should include the total Q100 and Q500 scour depths and provide any reductions in the final design scour amount when cohesive soils or rock exist. The Department is conducting research and working to develop more accurate methods of making these scour depth reductions. At select sites where Shelby tube soil samples can be obtained near the pier, the Department's Erosion Function Apparatus (EFA) can be used, primarily on an experimental basis, to determine the erosion rate of cohesive soils and the scour depth can be re-calculated using the SRICOS analysis program. Contact the BBS Foundations and Geotechnical Unit or Hydraulics Unit to determine if this testing and analysis is possible or appropriate on a case-by-case basis. In the absence of an EFA/SRICOS cohesive soil scour analysis, the following general guidance has been used by the Department and is provided to assist the geotechnical engineer in making recommendations on reducing the theoretical, predicted scour depth at typical bridge locations with non-granular streambeds.

1. Non-weathered limestone or dolomite is generally not considered susceptible to scour and, in most cases, should be assumed to arrest scour from extending below the non-weathered elevation. (100% reduction in scour depth)
2. Shale and sandstone deposits are more susceptible to erosion depending on their strength and degree of weathering. In most typical deposits, the amount of scour computed to extend into to this rock may be assumed to be only 10% of the predicted value for sand. (90% reduction in scour depth)
3. When stiff to hard (Q_u > 1.5 TSF) cohesive soil layers exist with no sandy or lower strength layers present and the boring data is located close to the proposed substructure, the predicted scour depth can be assumed to be only 50% of the predicted value for sand.

(50% reduction in scour depth)

4. When soft to stiff (Q_u between 0.5 to 1.5 TSF) cohesive soils are present with no sandy layers or lower strength layers present, the scour can be taken as 75% of that predicted in sand. (25% reduction in scour depth)
5. When lower strength (Q_u < 0.5 TSF) cohesive soils or substantial layers of sands are present, or the boring data is not close to the proposed pier, the scour should be assumed to act as granular, and, as such, the scour should be taken as 100% of that predicted in the Hydraulic Report. (0% reduction in scour depth)

Most sites will not be easily classified into one of the above categories. It is recommended that some interpolation, weighted averaging, and substantial engineering judgment be used to determine if any reduction can be provided in the SGR.

Foundations Design for Scour

The foundations shall be designed to provide full factored resistance available to resist strength limit state loadings during the Q100 event but shall also provide nominal or ultimate resistance during the Q500 event using a resistance factor or factor of safety equal to 1.0. The geotechnical engineer should discuss the impact of site-specific soils with the engineer responsible for the TSL and determine the Q100 and Q500 scour elevations to be used in the SGR and TSL. See Table 2.3.6.3.2-1 and Table 2.6.3.6.2-2.

Piers are of primary concern for damage from scour. The TSL engineer should compare the cost and feasibility of designing the piers to withstand the design scour with other alternatives such as relocating the pier or changing foundation type. The TSL engineer may also employ structural countermeasures (examples: sheet piling around foundation, deeper footings) within the development of pier alternatives. These alternatives should be compared utilizing essentially equivalent design scour conditions. There is also the option of improving scour conditions (i.e. reducing estimated scour) by enlarging the waterway opening if the above alternatives prove too costly or infeasible.

A widely employed tactic that is no longer recommended for new structures is the use of “hydraulic countermeasures” such as riprap or gabion baskets to armor the pier at the streambed interface. Per HEC-18 and FHWA hydraulic policy directives, “hydraulic countermeasures” intended to protect the pier or stabilize channel alignment cannot be considered absolute safeguards against

scour. It is unrealistic to expect these "countermeasures" to remain stable and in-place throughout the service life of a structure. Consequently, the TSL engineer should consider alternatives to ensure the foundation is structurally stable for design scour without the use of riprap, gabions, or some other type of revetment intended to reduce or mitigate estimated scour. Use of riprap at piers is allowed if additional alternatives are also employed. This is employed on an infrequent basis, typically at the request of District or BBS Hydraulics. See Chapter 11 of the Drainage Manual for hydraulic scour countermeasure direction.

Unlike riprap or other revetments at piers, armored embankments (slopewalls) are considered to be scour deterrents for typical IDOT bridge abutments. The combination of an open, "spill-through" abutment configuration set back away from the channel and positioned behind a 1:2 (V:H) embankment lined with Class A4 or A5 stone riprap is considered to be an adequate level of scour protection for stub abutment foundations. With this waterway opening geometry and revetment in place, potential damage from a single event is minimized.

As opposed to the relatively immediate and potentially catastrophic development of scour at piers, damaging scour at the abutment slopewall generally results from multiple flood events over a period of time. This rate of scour development and the relative ease of observing scour at abutments (in comparison to piers) generally allows inspectors more time to identify the loss of rock or embankment material. The primary exception to this generality occurs at bridges where the abutment is not set back from the channel and the slopewall is in proximity to the channel bank. Another example arises when channels have the potential to migrate. At locations where the abutment is not set back from the channel or could become impacted by channel migration or other flow conditions, the TSL engineer should consult with the project hydraulic engineer. Ideally, design recommendations that address this atypical issue by upgrading the slopewall armoring should originate in the Hydraulic Report. The upgrade can consist of larger stone, more rigid revetment (such as slope mattress), or river-training measures in the vicinity of the bridge (such as a bendway weir) to stabilize potential channel migration.

Design Scour Table for Bridges and Culverts

In addition to design, inspection of the actual streambed and structure conditions throughout the life of the bridge is required for maintaining public safety through the assurance of design assumptions. In a joint National Bridge Inspection Standards (NBIS) review with IDOT and the FHWA, it was recommended that the design scour elevations be provided on all new bridge plans over waterways to assist the bridge maintenance engineers during their inspections. This will allow a better assessment of the severity of any changes in the streambed surface over time or to quickly identify problem scour conditions that require remediation.

Design scour elevations shall be provided near the Waterway Information Table on the TSL plan and a refined table showing only the governing scour elevations shall be shown on the general plan sheet of the Final Design plans for all bridges over waterways.

Typical TSL Scour Elevation Table:

Design Scour Elevations (ft.)				
	W. Abut.	Pier 1	Pier 2	E. Abut.
Q100				
Q500				

Table 2.3.6.3.2-1

Final Plans Scour Elevation Table:

Design Scour Elevations (ft.)			
W. Abut.	Pier 1	Pier 2	E. Abut.

Table 2.3.6.3.2-2

The design scour elevations at each substructure unit should be selected to document the amount of tolerable soil loss at a substructure unit while maintaining the specified factored resistance available. At open abutments (integral, semi-integral, stub) protected with riprap, design scour is typically set not at predicted scour, but at the bottom of the abutment. At piers, the elevation should be taken from the SGR which provides the necessary scour reduction (due to cohesive

soil or rock deposits) to the original scour elevation provided in the Hydraulic Report. The adjusted scour elevations shall not be raised any higher than the elevation given in the SGR but may be lowered if the footing is located below these elevations. When the footing elevations extend below the predicted scour, the design scour elevations are typically set at the bottom of the footing. Also as mentioned above, significant revisions during TSL development to the hydraulic design recommendations and approved waterway opening (such as relocating piers, changing low beam clearance, or changing the opening size) may significantly impact the design scour elevations at piers. When this occurs the TSL engineer should use hydraulic and geotechnical input to determine if the calculated and adjusted scour depths should be revisited.

Scour or erosion at a bridge pier can create the possibility of catastrophic failure. However, since that is typically not the case at culvert structures, the FHWA does not mandate a calculation or evaluation of scour at this structure type. Although not considered a scour evaluation per se, the potential for damaging erosion, channel migration and aggradation\degradation are still addressed within the TSL plan development. This assessment can lead to the inclusion of such design features as riprap placement at one or both ends, cutoff walls, drop structures, energy dissipaters or even a change in structure type. Accordingly, the Design Scour Elevation Table for culverts is not the calculated scour, but instead documents the tolerable loss of stream bed material/riprap that would not impact the factor of safety or performance of the box and wingwalls. The Design Scour Elevation Table will indicate Upstream and Downstream elevations as shown in Table 2.3.6.3.2-3.

Design Scour Elevation Table

	Upstream	Downstream
Design Scour Elevation (ft.)	385.63	385.47

Table 2.3.6.3.2-3

The design scour elevation would normally be taken as the bottom of the cut off wall which is usually located at or above the bottom of horizontal L-Type or T-Type wingwalls. When the foundation soils in front of the wall footing are necessary for providing sliding or bearing capacity resistance, the elevation may be increased. In the case of sheeting pile or soldier pile wingwalls, the elevation would be the cutoff wall or the soil elevation assumed in the wall design, whichever is higher.

2.3.6.3.3 Slope Protection and Berms

Slope Protection for Stream Crossings

Layouts of slope protection systems for stream crossing structures are shown in Figure 2.3.6.3.3-1 and several online TSL examples indexed in Section 2.3.14. In each situation, the slope protection system is developed to protect the bridge embankment endslopes and areas where stream bank failure could endanger the structure or its individual components. Figures 2.3.6.3.3-2 and 2.3.6.3.3-3 indicate the approved treatments for ending a stone riprap embankment protection system. The flank detail shall be used along both the upstream and downstream sides of the riprap treatment. All required riprap treatment details shall be shown or specified on the TSL.

For additional slopewall information and details, see Section 3.14.

Abutment Cap Geometry

Figure 2.3.6.3.3-4 depicts the preferred methods of treating abutment cap geometry for a single structure with or without varying elevations between exterior beams.

These sketches are presented as guides and it is anticipated that situations will occur which will fall outside the limits defined here. These situations will require combinations of the treatments shown or unique solutions to solve specific problems.

Dual structures will normally require individual evaluation to determine the appropriate berm treatment.

Berm Widths

Figures 2.3.6.3.3-5 and 2.3.6.3.3-6 are provided to show the development of berm widths for open abutment structures.

Slopewalls

Section 3.14.4 presents details and Departmental policies for concrete and bituminous slopewalls.

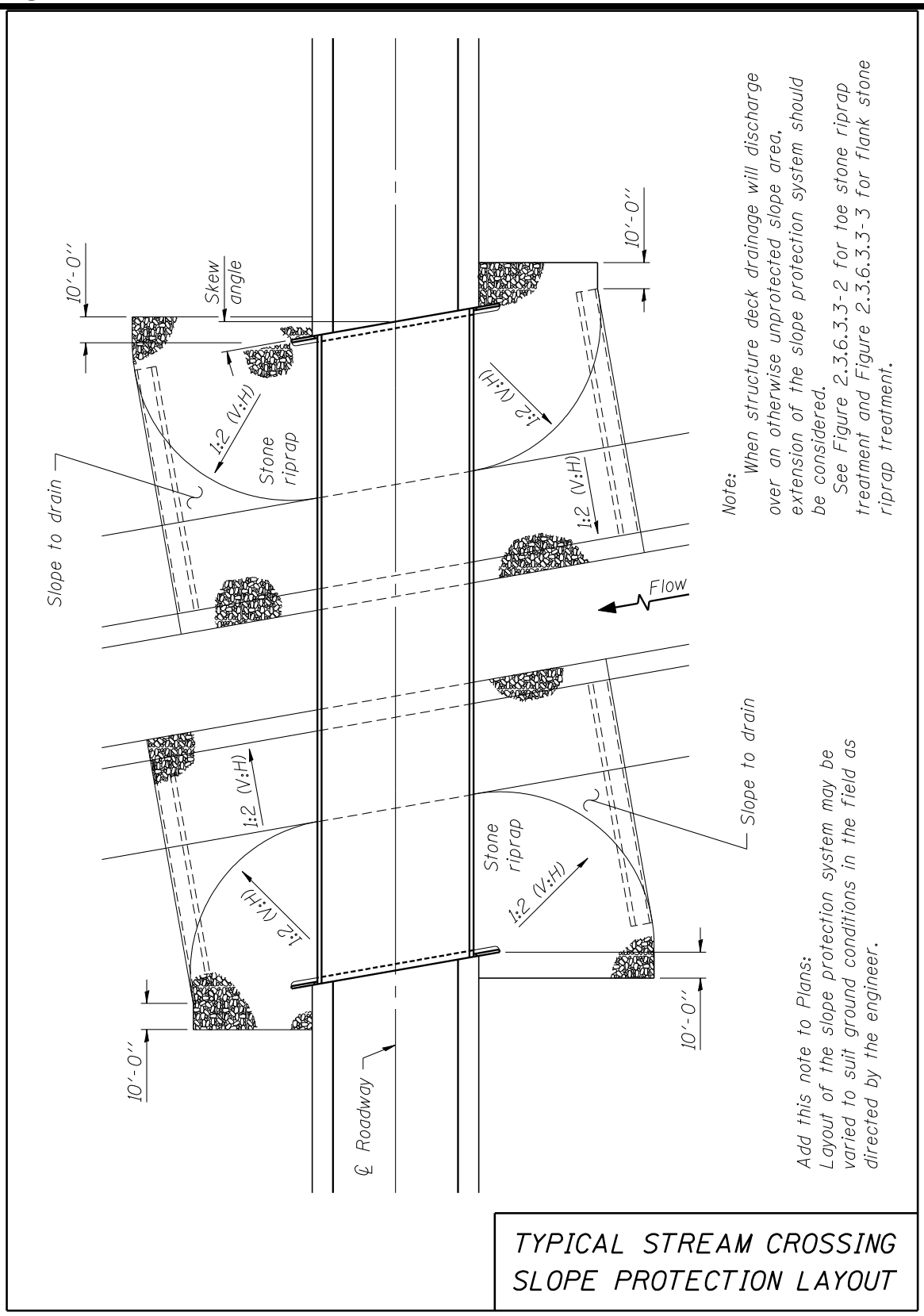

Figure 2.3.6.3.3-1

Riprap Class	t_R	t_B	A	B
A4	16''	6''	4'	8'
A5	22''*	8''	5'	10'
A6	26''*	10''	6'	12'
A7	30''*	12''	7'	14'

* Check abutment depth and increase as necessary to match depth of riprap and bedding

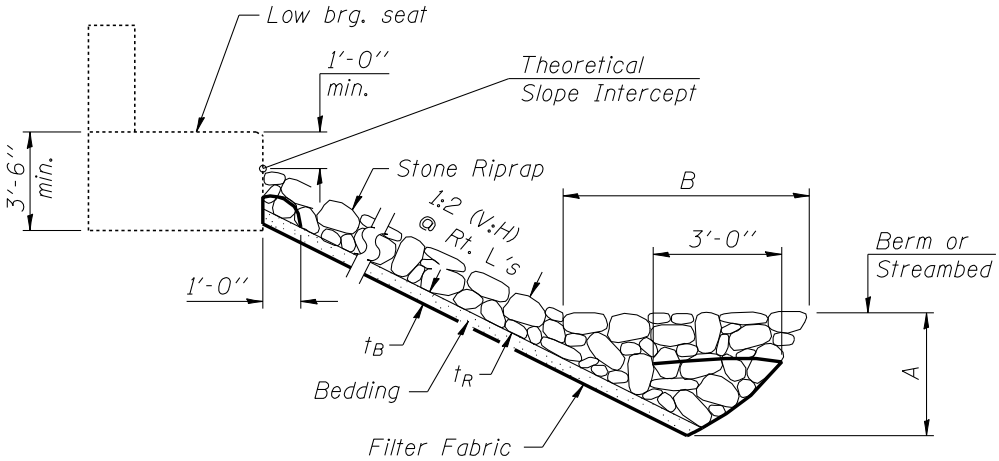

TOE STONE RIPRAP TREATMENT
STREAM CROSSINGS

Figure 2.3.6.3.3-2

Riprap Class	t_R	t_B	A	B
A4	16''	6''	2'-8''	4'-0''
A5	22''	8''	3'-8''	5'-6''
A6	26''	10''	4'-4''	6'-6''
A7	30''	12''	5'-0''	7'-6''

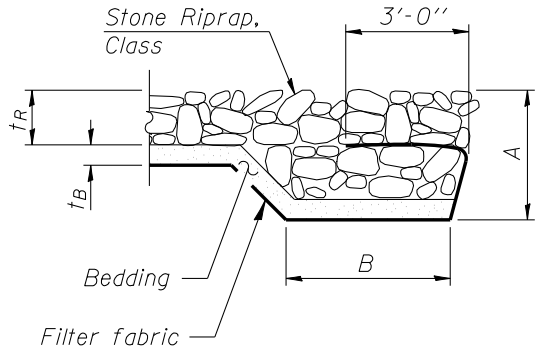

FLANK STONE RIPRAP TREATMENT FOR STREAM CROSSINGS

Figure 2.3.6.3.3-3

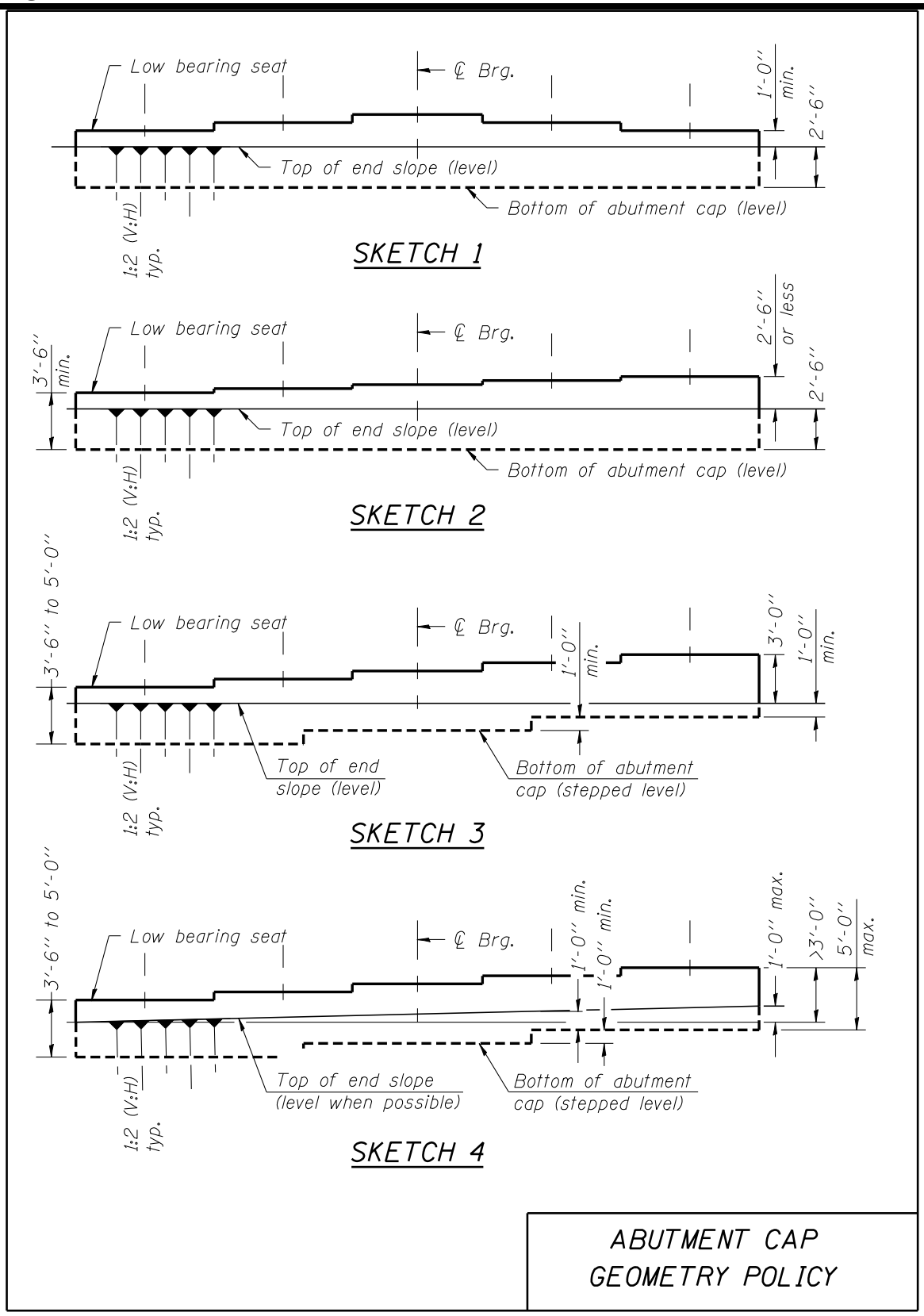

Figure 2.3.6.3.3-4

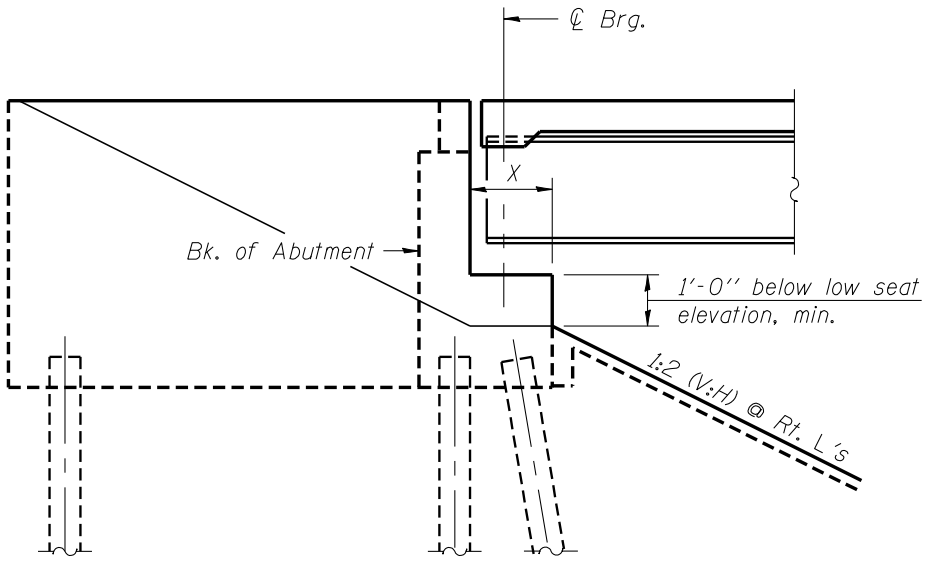

FIGURE 1

Berm width equal to width of seat.
For X ≤ seat width

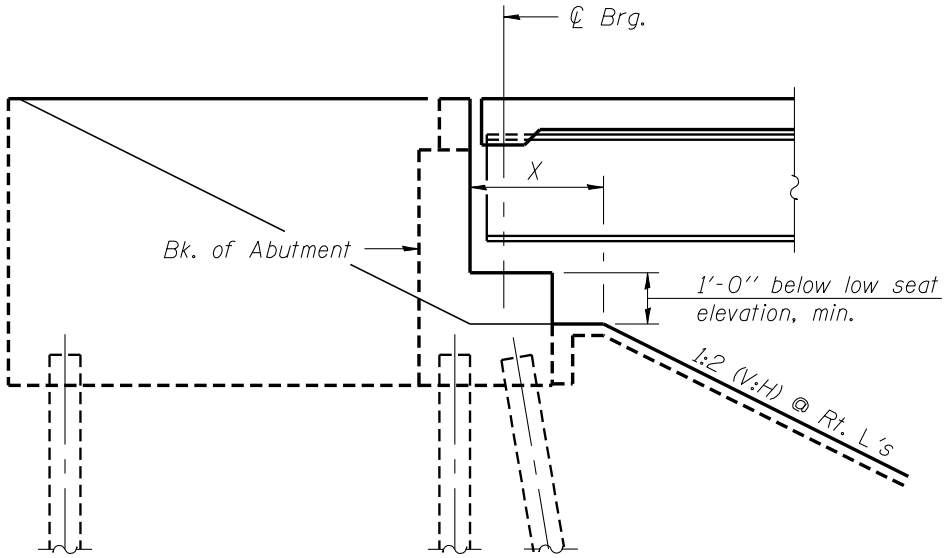

FIGURE 2

Wider berm required for site conditions.
X ≥ seat width

BERM WIDTH DETAILS

Figure 2.3.6.3.3-5

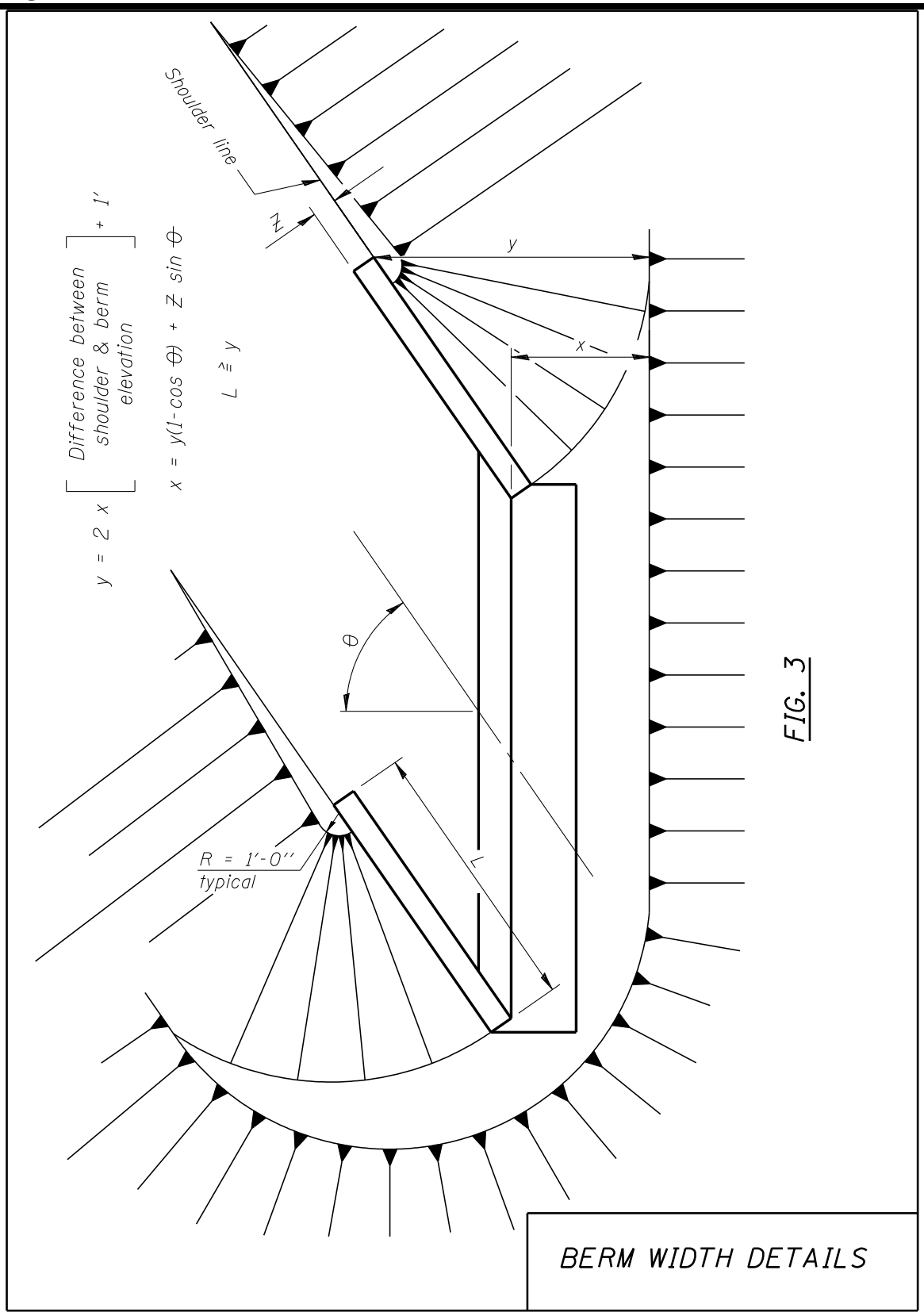

Figure 2.3.6.3.3-6

2.3.6.4 Temporary Construction Works

2.3.6.4.1 Temporary Sheet Piling and Temporary Soil Retention Systems

During the planning phase, it is important to evaluate the likely temporary excavation slopes necessary to complete the construction being considered. When these excavations extend beyond State ROW, encroach on traffic lanes or other infrastructure, a temporary soil support system of some type will generally be required. The Structure Geotechnical Report will evaluate and identify the proposed temporary construction slopes as being unstable for the soil type/strengths present and recommend some retention or slope flattening. The engineer responsible for the TSL plan preparation should evaluate the added cost of installing temporary retention systems vs. using other substructure types/locations to verify that the most cost effective structure type, with any necessary temporary retention, is shown on the TSL. It is desirable to explore whether a simple cantilever sheeting piling design may be feasible or if a more elaborate and expensive temporary soil retention system design might be required as this may affect the cost comparison between different structure configurations. IDOT normally provides temporary sheet piling designs in the contract documents using the design charts and methods provided in Design Guide 3.13.1. At locations where the simplified charts do not work, the pay item and GBSP "Temporary Soil Retention System" is utilized which allows the contractor to evaluate the exposed retention surface area and heights (provided in the contract documents) and propose a cost effective wall system design during construction. The TSL plan need only show the locations of temporary sheet piling or a temporary soil retention system and should not show a full design. The final retention area/heights and temporary sheet piling design evaluation are completed during the Final plans phase.

2.3.6.4.2 Cofferdams

Most structural concrete for substructures should be built in dry conditions, especially those with reinforcement congestion which makes constructability and construction inspection difficult. Dewatering is typically achieved by the use of cofferdams. When the EWSE indicates water is expected above the bottom of the footing or encasement but below the existing ground line, a cofferdam will not be required unless soil conditions exist where reasonable pumping efforts cannot be assumed to be able to keep the excavation dry. When the EWSE indicates water is expected to be above the ground surface at the substructure location, a cofferdam shall be used.

Locations with six feet or less of water above the bottom of the encasement or footing will typically require a Type 1 Cofferdam. Locations with greater than six feet of water will require a Type 2 Cofferdam. The exceptions to this policy are when web walls are used, drilled shafts have permanent casing and/or removable forms, and when individually encased pile bents are proposed. See Section 3.13.3 for more information on these two types of cofferdams. The SGR provides some recommendations concerning the need for cofferdams and seal coats. The Estimated Water Surface Elevation (EWSE) is a key value used by both the geotechnical and structural engineer to determine the need and design requirements for cofferdams and seal coats. It is also used to select the most appropriate pier type for the expected construction conditions. The EWSE value is typically determined by a simple procedure described below. When Type 2 Cofferdams are necessary, the top of cofferdam elevation specified in the Contract plans should normally be 3 ft. above the EWSE. If the foundation soils require the use of a seal coat, the seal thickness design (either the initial designed thickness placed on the Contract plans or a redesigned thickness by the contractor) is based on the top of cofferdam elevation which is normally directly related to the EWSE, as stated above. The use of permanent casing on individual column drilled shaft bent piers and transfer beam drilled shaft bent piers, extending to 1 ft. above the EWSE can be used without a cofferdam or seal coat in waters of most any depth.

Many bridge sites will be located in controlled pools, especially on major rivers, where the normal pool elevation established by the United States Corps of Engineers or other agencies will be readily available and serves as a very accurate EWSE. Other sites will be located at or near a United States Geological Survey stream gage station, which may be a source of data for determining the EWSE. A controlled pool elevation, gage data or any other information pertinent to EWSE determination should normally be contained within the Hydraulic Report. However, many sites will require an estimate based on hydraulic site surveys. In this case a standard method of finding the EWSE is presented below:

1. From Hydraulic Report stream survey, find the *existing water surface elevation*, as provided per Drainage Manual 2-602.02 & Fig. 2-602.02 b, (or low flow) at the bridge site and the month that this elevation was surveyed. Also, find the top of bank elevation from the stream cross sections at the bridge.
2. The *existing water surface elevation* is assumed to be a “typical low flow”, in any year, for the month taken. April is assumed to be the typical “high” month for water surface elevations and September is assumed to be the typical “low” month. The following table may be used to adjust the *existing water surface elevation* to the month of April.

Jan.	Feb.	Mar.	Apr.	May	Jun.	Jul.	Aug.	Sep.	Oct.	Nov.	Dec.
+1.5	+1.5	+0.75	0	+0.75	+1.5	+2.25	+3.0	+3.75	+3.0	+2.25	+1.5

3. The maximum elevation to be used is 75% of the difference from the typical September low flow elevation to the top of bank elevation added to the September low flow elevation. The September elevation may be assumed to be 3.75 feet below the April elevation but not lower than one foot above the streambed elevation.
4. The Estimated Water Surface Elevation is the lower elevation from step 2 or step 3.
5. The EWSE calculated from this procedure should be tested for reasonableness and the District Hydraulic Engineer and/or the District Bridge Maintenance Engineer should be consulted if there is any question about the validity of the elevation.

The following provides an example EWSE computation:

Step 1: Collect Data

From Hydraulic Report stream cross section or profile:

Existing water surface elevation = 606.1 at bridge site

Top of bank elevation = 611.3 at bridge site

Streambed elevation = 602.2 at bridge site

Month of survey is November

Step 2: Adjust existing water surface elevation to an assumed April Value

606.1 + 2.25 = 608.35

Step 3: Check maximum water elevation

Assumed September elevation: 608.35 – 3.75 = 604.6

One foot above streambed elevation: 602.2 + 1.0 = 603.2

604.6 > 603.2, therefore use 604.6 as September elevation

75% of difference between September elevation and top of bank elevation

0.75(611.3 – 604.6) + 604.6 = 609.6

Step 4: Select preliminary EWSE

608.35 < 609.6, therefore use EWSE = 608.35

Step 5: Verify with District if this calculated value is reasonable

The engineer responsible for the TSL plan should consider the added expense of using cofferdams as this may affect the cost comparison between different structure configurations. For more information on cofferdams and seal coats refer to Section 3.13.3.

2.3.6.4.3 Temporary MSE Walls and Temporary Geotextile Retaining Walls

In fill construction, sheet piling may not provide the most cost effective retention system. Sheeting in taller fill retention applications can result in excessive deflections caused by the higher than active compaction efforts against the wall which may not be desirable. IDOT has found the use of temporary MSE or temporary geotextile walls to be cost effective in many fill conditions. For large retention heights, critical retention applications (such as high ADT, Interstate, tight staging alignment, etc.) and/or a relatively large quantity of wall surface area, temporary MSE walls are recommended. These walls are designed and contracted similar to "temporary soil retention systems" in that the retention surface area is provided in the Final plans and the contractor provides a design from a qualified MSE vendor. Smaller retention applications can utilize a temporary geotextile wall system, designed and provided to the contractor in the Final plans. Common applications include stage construction fills, fill retention on top of and adjacent to box culverts, and fill retention where the foundation soils or rock will not allow the penetration of sheet piling. The TSL plan will normally call out either temporary MSE wall or temporary geotextile wall when they are determined to be cost effective and when they are to be further developed in the Final plans phase. The SGR should provide recommendations on the use and feasibility (bearing pressure, settlement, etc.) of using these systems. For more information on the design and plan requirements for these walls, refer to Section 3.13.2.

2.3.7 Bridge Geometry and Layout

Bridge geometric policy is the application of highway geometric design policies to the design of bridges, and generally defines the relationship between the physical limits of a structure, the supported roadway and the obstruction or obstructions bridged.

Since good bridge geometric design is intrinsic to the development of aesthetic, economic and safe structures, the following policies have been developed to facilitate the preparation of TSL plans along these lines.

Any deviation from these policies shall receive prior approval from the Engineer of Bridges and Structures.

2.3.7.1 Overall Length

Overall length of a bridge is generally determined by required horizontal and vertical clearances. For grade separation bridges depending on each roadway's classification, the minimum horizontal and vertical clearances may be found in the BDE Manual Chapters 38, 39, and 44 through 50. For bridges over stream crossings, the minimum freeboard requirement and the approved waterway opening can be obtained from the Hydraulic Report. For bridges over navigable waterways requiring a permit from the United States Coast Guard (USCG), in addition to the Hydraulic Report, other clearance requirements may be obtained from the USCG publication "Application for Coast Guard Bridge Permits." The minimum vertical clearance required by IDOT policy for bridges over waterways is 2 ft. For bridges over railroads, the minimum horizontal and vertical clearances may be found in Chapter 39 of the BDE Manual.

2.3.7.1.1 Horizontal Clearance

The minimum horizontal clearance shall be provided from any obstruction such as piers, abutments, etc. for the safety of the traveling public. The minimum horizontal clearance is defined as the clear horizontal distance from the edge of pavement to the face of pier or abutment. Reduced horizontal clearances may be provided; however, all reduced clearances shall be economically justified with barrier protection provided and subject to approval by the District and BDE and, if Federally funded, the FHWA.

2.3.7.1.2 Vertical Clearance

Vertical clearance is defined as the clear vertical distance between the low superstructure and the usable roadway width including shoulders, the design natural high water elevation, or 8 ft. from either side of the railroad track centerline. Typically, shorter structures or those on minimal vertical grade, this determination is made at the abutment. However, for longer bridges or for bridges on substantial vertical grade where the beam elevation may vary by several feet over the length of the bridge, the point of reference for low beam clearance may be over the midpoint of the channel, not the abutment. Please refer to the Drainage Manual for further reference. The location and value of the minimum vertical clearance provided shall be shown on all TSL plans.

For reconstruction/rehabilitation projects, where established profile grades remain unchanged and the minimum vertical clearance/freeboard is substandard, the District shall secure a policy waiver from the Bureau of Bridges and Structures. Each waiver of vertical clearance/freeboard

will require that the District submit proper justification and documentation for consideration by the Bureau of Bridges and Structures. However, for those projects where the District Hydraulic Engineer has approval authority for the Hydraulic Report, the District has the authority to determine if an exception should be made to the clearance/freeboard criteria. In that instance, the District is still required to justify and document the waiver, but BBS approval of the waiver is not required.

2.3.7.2 Bridge Width

Rural bridge width on a rehabilitation or reconstruction project is required to be addressed in the BCR and is a function of traffic, design speed, existing roadway features and the proposed roadway improvement. It should be verified that the bridge width shown on the TSL plan follows that recommended by the BCR. If there is no BCR, detailed guidelines on required bridge widths can be found in Chapters 39 and 44 through 50 of the BDE Manual. Urban bridge widths for rehabilitation/reconstruction projects generally match the approach roadway template.

2.3.7.3 Skew Angle

The relationship between two or more intersecting elements (skew) of a roadway shall be shown on all TSL plans. See Section 2.3.14 which indexes TSL examples available online for proper application of this requirement.

The accuracy of the skew angle required to accommodate either stream crossings, roadways or railroads shall be limited to the nearest second with the exception of standard bridges which have been developed utilizing skew increments of 5°. Bridges over waterways are typically skewed to better align the waterway opening with the stream channel at the upstream face of structures. The Hydraulic Report provides a skew angle that best accommodates flood conditions, however this recommendation is subject to refinement during TSL plan development.

For bridge types with limited allowable skew (i.e. structures with integral abutments, skew angle $\leq$ 30°), the skew angle of the substructures does not necessarily need to match the roadway or stream crossing skew. Contact the Bureau of Bridges and Structures if the planned skew angles between substructures and roadway or stream crossing skew differ by more than 10° for a particular project.

2.3.7.4 Cross Slopes

2.3.7.4.1 Tangent Sections

Figure 2.3.7.4.1-1 indicates the deck cross slopes for structures with various combinations of lanes and medians. These slopes are appropriate for all new bridge superstructures. Cross slopes for redecking projects should be considered on an individual basis to avoid excessive fillets and undesirable additional dead loads.

2.3.7.4.2 Superelevation Development

The approved procedure for developing superelevation is shown in Figure 2.3.7.4.2-1. The layout of a structure located within a horizontally curved section of highway is shown in TSL Ex. 4. The appropriate offset treatment is described in Section 2.3.7.6.

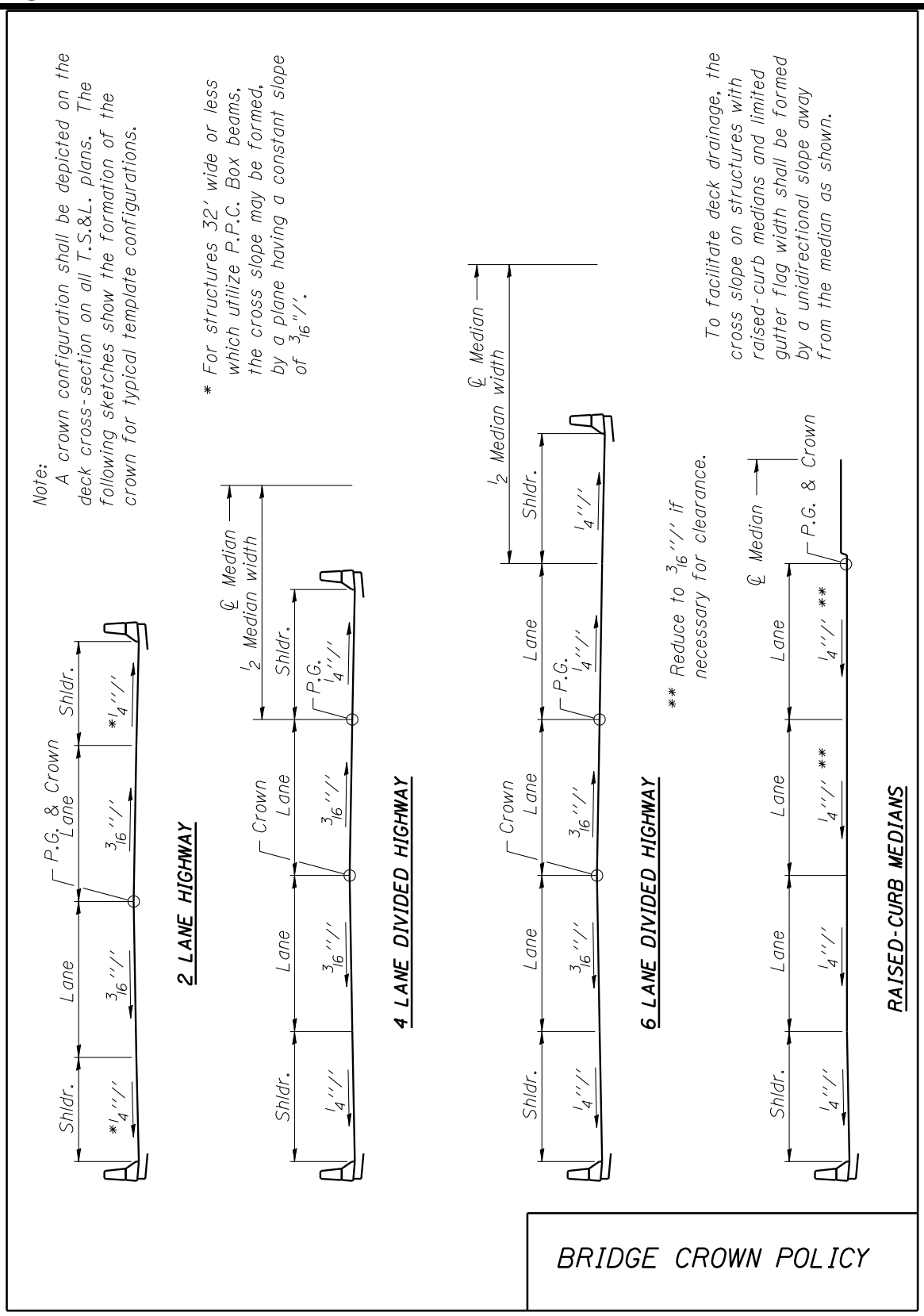

Figure 2.3.7.4.1-1

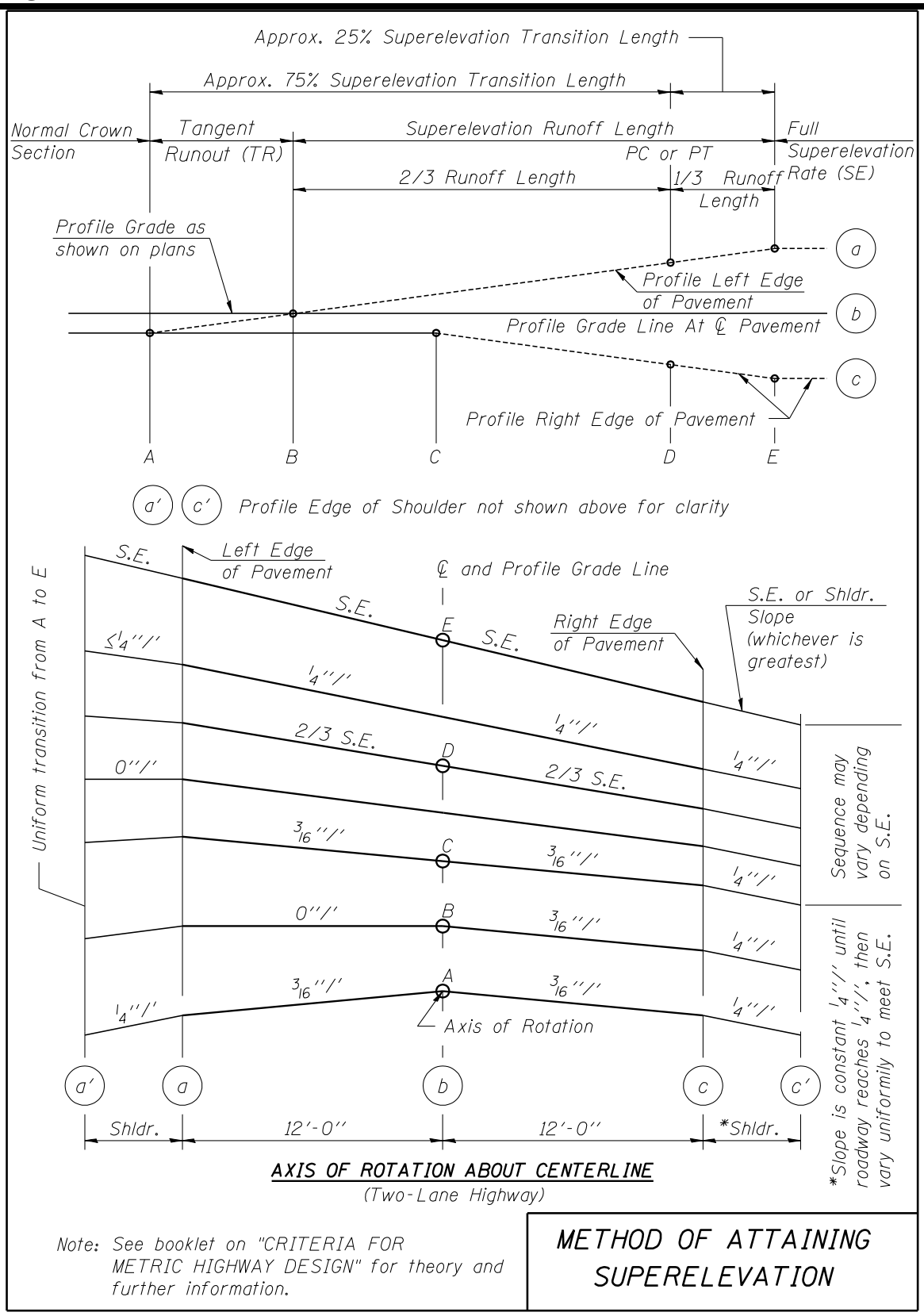

Figure 2.3.7.4.2-1

2.3.7.5 Sidewalks

The general procedure for new construction of sidewalks and bikeways on bridges is to slope the surface transversely away from concrete parapets. This will avoid the need for any surface drainage through concrete parapets. The typical cross slope is 1.7%. See Base Sheets R-28, R-29, R-32, R-33 and Figure 3.2.4-8 for detailed configurations.

2.3.7.6 Curved Alignment

Bridges located on horizontally curved alignments present special problems in layout, design and construction. Because of this, the effect of curvature should receive careful consideration in the planning stages to assure a problem free structure that is economically and structurally justifiable. An increase in the degree of curvature increases the amount of torsional forces which results in a reduction in the direct bending capacity (stress) of a beam. Other factors affecting the stresses that should be accounted for are uplift for sharply skewed structures, stiffness analysis and effect of forces on shear center.

The following treatments (Table 2.3.7.6-1) are recommended for layout of highway structures on horizontally curved alignments. Integral abutment structures on horizontally curved alignments may be widened for offsets $\leq$ 2 ft. to avoid a curved structure and for offsets > 2 ft., economic and shoulder transition studies should be performed and discussed with the BBS prior to avoiding a curved structure.

See TSL Ex. 4 for the layout of a horizontally curved structure.

Structure Layout Guidelines for Horizontally Curved Alignments

Shoulder Width	Maximum Offsets		
	< 3 in.[1]	3 in. to 12 in.	> 12 in.
< 4 ft.	Widen Structure	Widen Structure[3]	Curve Structure[3]
4 ft.	Widen Structure	Widen Structure	Curve Structure
> 4 ft.[2]	Split Offset	Split Offset[4]	Curve Structure

1 Girders and watertables shall be straight and parallel.

2 For dual structures, consider reducing the larger shoulder width.

3 Re-evaluate alignment for revision to tangent section.

4 For Interstate Bridges, widen to provide full shoulder width.

Table 2.3.7.6-1

2.3.7.7 Traffic Barriers

Traffic Barrier Terminals, Type 6 and 6A are crash tested and approved by the FHWA for connection of Steel Plate Beam Guardrail to the approach ends of bridges. These terminals shall be implemented on applicable projects.

Bridge superstructure parapets or railings with curb shall be extended 15 feet onto approaches. This 15 foot parapet or railing continuation requirement may be waived for special cases, such as sight distance requirements for adjacent roads. Please contact the Bureau of Bridges and Structures for approval of the waiver. The 15 feet of parapet on the approach slab shall be omitted for straight bridges on curved roadways to minimize the bridge width increase and to avoid a possible kink in the railing-to-parapet connection.

Details of special treatments for bridges with sidewalks can be found in the Planning Cell CADD Library available online.

For bridges with expansion joints, the standard parallel wingwall as shown in Figure 3.8.5-2 shall be utilized. The foundation support for the wingwalls (i.e. piles, drilled shafts or spread footings)

shall normally be the same as that for the abutment. Some structures with expansion joints may have stub abutments with dog-ear wingwalls in which case the wingwall is typically moved 6 in. toward the face of the abutment.

2.3.7.8 Grinding and Smoothness Criteria

At the request of a District, a bridge project may have special grinding and smoothness criteria for the deck and approach slab. Detailed guidelines for grinding and smoothness criteria can be obtained from the BBS. See also Section 3.1.9 for additional information.

2.3.8 Maintenance of Traffic

When staged construction has been determined to be the most cost effective alternate to provide for traffic flow during the reconstruction process, staging sequences shall be shown on the TSL plan. Several online TSL examples (see Section 2.3.14) are available which illustrate typical staging plans. The deck stage construction joint shall be located within the center half of the slab span between beams/girders. Where a wide-load detour is not available, the minimum lane width for a single lane staged roadway shall be 14 ft. – 0 in. If a separate wide-load detour is provided, a minimum lane width of 10 ft. – 0 in. may be provided. The minimum lane width for multiple lane widths shall be provided in increments of 10 ft. – 0 in. Each of the above lane widths should be considered as minimums and additional width should be provided whenever practical. The recommended lane width is 12 ft. – 0 in.

To separate traffic from construction areas during staging, a temporary concrete barrier shall be provided when it can be safely supported by the existing structure. See Base Sheet R-27 for the appropriate details. The temporary steel bridge rail alternate should be used whenever a temporary concrete barrier cannot be safely supported or the use of a temporary concrete barrier will not provide the minimum required lane width but should not be used on new bridge decks. The temporary steel bridge rail is depicted on Base Sheet R-25.

All stage traffic over deck-girder superstructures shall be supported by at least three girders. New deck-girder superstructures which may not be initially staged should consider the number and arrangement of girders in order to provide at least three girders for possible future staging. This requirement may be waived if traffic can be detoured during future reconstruction or if approval is obtained from the Bureau of Bridges and Structures. Special attention should be given to stage

construction of concrete bridge decks on longer span structures when large deflections or cambers may cause construction problems in the final deck pour. Alternate beam sections or a third stage closure pour should be considered when differential dead load deflections of 2 ½ in. or larger are anticipated along a stage construction line.

2.3.9 Hydraulic Issues

All structure replacements over waterways shall meet the applicable regulatory criteria established by the Illinois Department of Natural Resources Office of Water Resources (IDNR-OWR) Floodway Construction Program. Similarly, projects over navigable waterways shall satisfy requirements of the United States Coast Guard. Please refer to the Chapter 1 of the IDOT Drainage Manual for more detail on these two regulatory agencies and their project requirements. The approved TSL plan is a part of the documentation required by both of these agencies.

2.3.9.1 IDNR-OWR

IDNR-OWR jurisdiction includes all IDOT roadway crossings of watersheds over 1.0 square mile in an urban or urbanizing location. For crossings that are not considered urban or urbanizing, IDNR-OWR jurisdiction includes all crossings with watersheds over 10.0 square miles. The appropriate IDNR-OWR floodway construction permit is either a statewide permit issued in-house by IDOT acting as the agent of IDNR-OWR, or a formal application is made to IDNR-OWR for an individual permit. In the first case, the approved TSL plan is part of the permit documentation. In the latter case, the approved TSL plan accompanies the submittal package from the Bureau of Bridges and Structures Hydraulics Unit to IDNR-OWR.

It is important to note that IDNR-OWR floodway construction permits are granted primarily on the basis of a single criteria, the structure's backwater impact upon the properties that constitute the upstream floodplain. Backwater or created head at a given crossing typically relates most directly to the overall length of the bridge\size of the culvert; i.e., the waterway opening that the structure provides. Consequently, IDNR-OWR does not approve or comment upon hydraulic design features such as beam clearance, pier location, number of culvert cells or scour countermeasures that do not relate directly to backwater impact. The applicant assumes responsibility for sound hydraulic design. In particular, the structural planner should be aware that IDNR-OWR permit issuance is not tied to or contingent upon meeting the 2 ft. low beam clearance or the 3 ft. roadway freeboard policy criteria.

2.3.9.2 Permit Sketches

As part of the preparation of plans for stream crossing structures, sketches shall be prepared for submittal to the agencies having jurisdiction over the involved waterways.

The Illinois Department of Natural Resources Office of Water Resources requires the submittal of Waterway Sketches and Channel Change Sketches. Samples of these sketches are illustrated in the Drainage Manual.

As applicable, names of waterways shall be shown in the title block of TSL and Final Design plans. See the Drainage Manual Appendix for a list of public waters.

The U.S. Coast Guard requires permit sketches when navigable waters are involved. Figures 2.3.9.2-1, 2.3.9.2-2, 2.3.9.2-3, 2.3.9.2-4 and 2.3.9.2-5 illustrate the proper presentation and requirements to be followed in the preparation of these drawings.

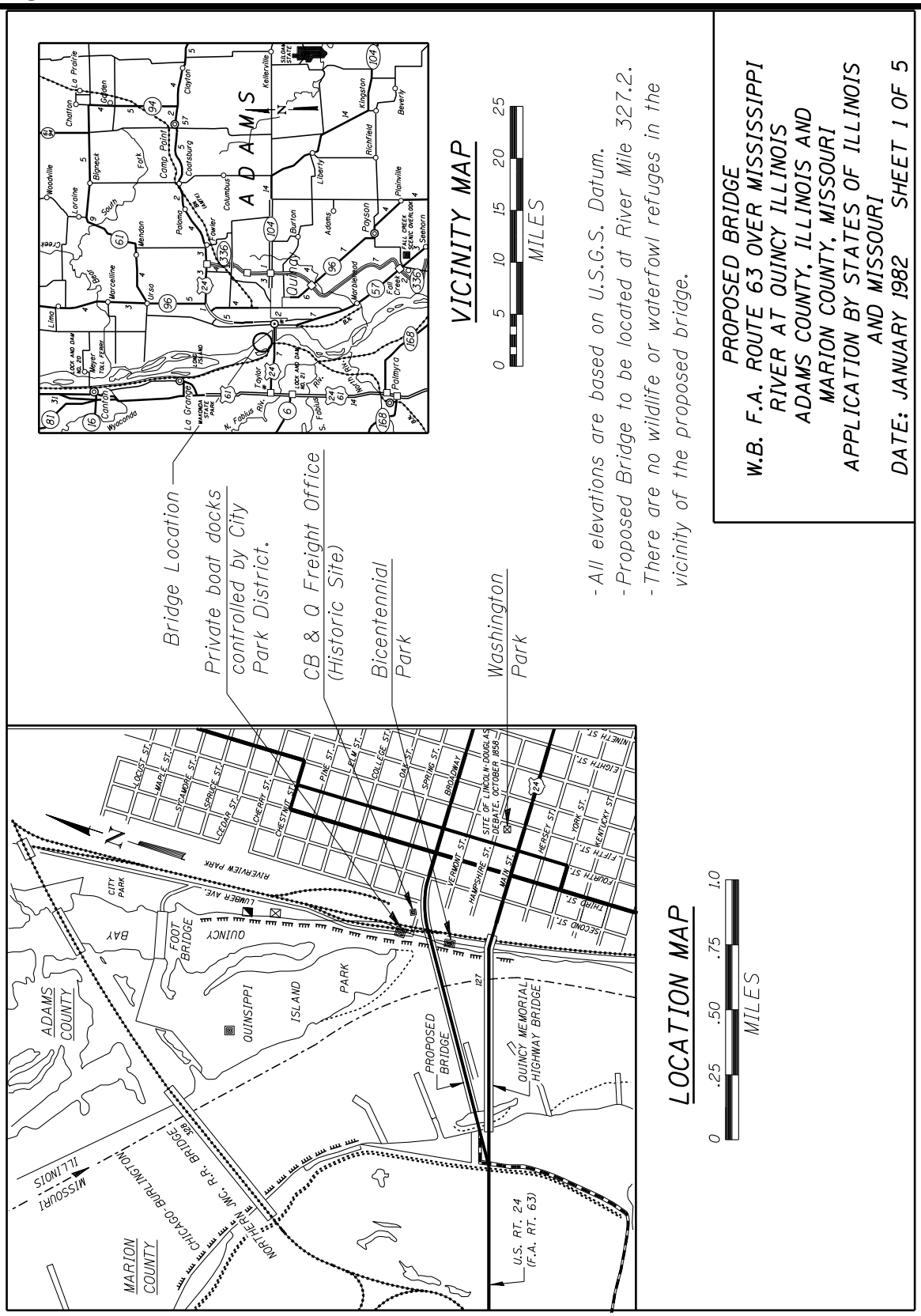

Figure 2.3.9.2-1

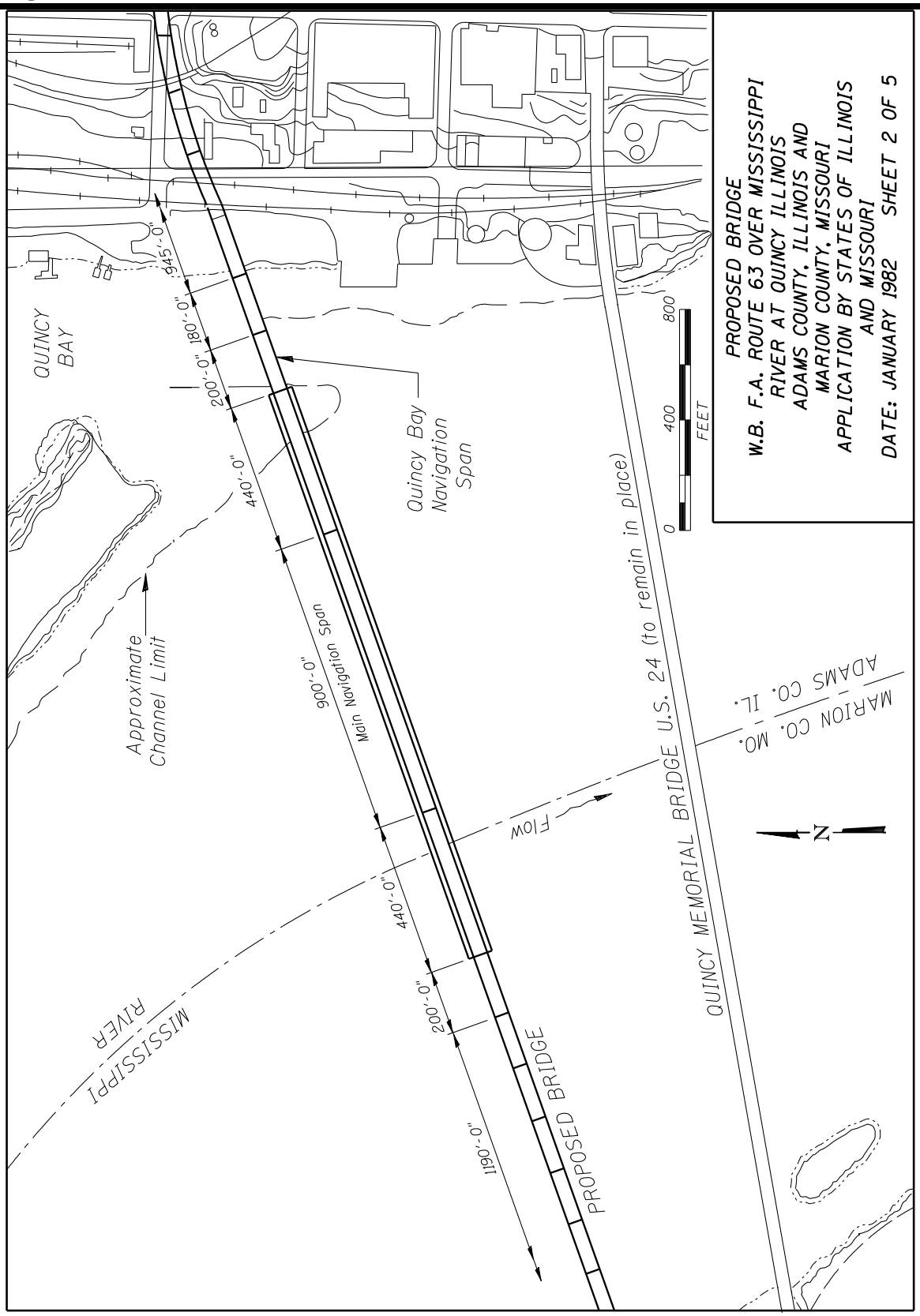

Figure 2.3.9.2-2

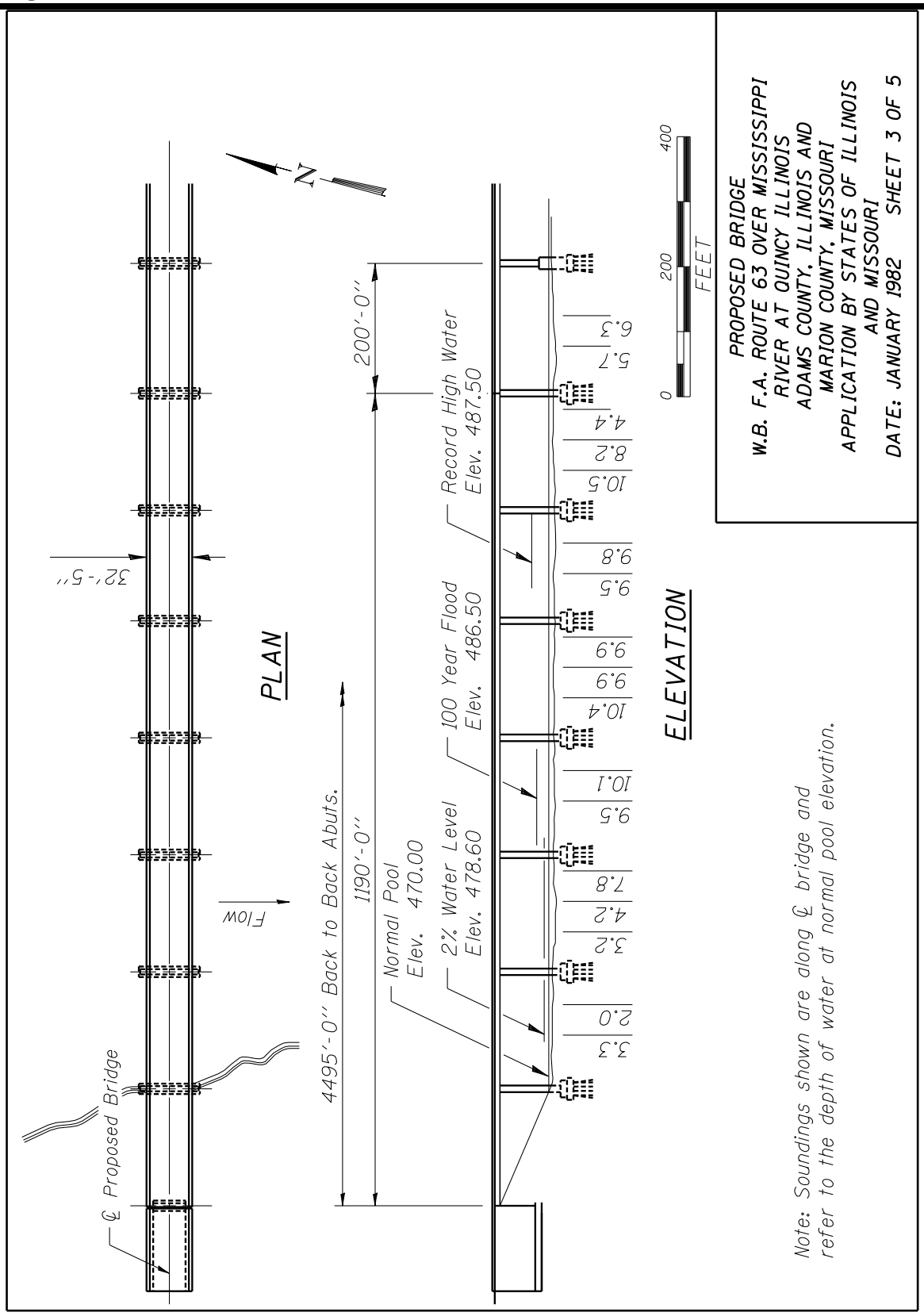

Figure 2.3.9.2-3

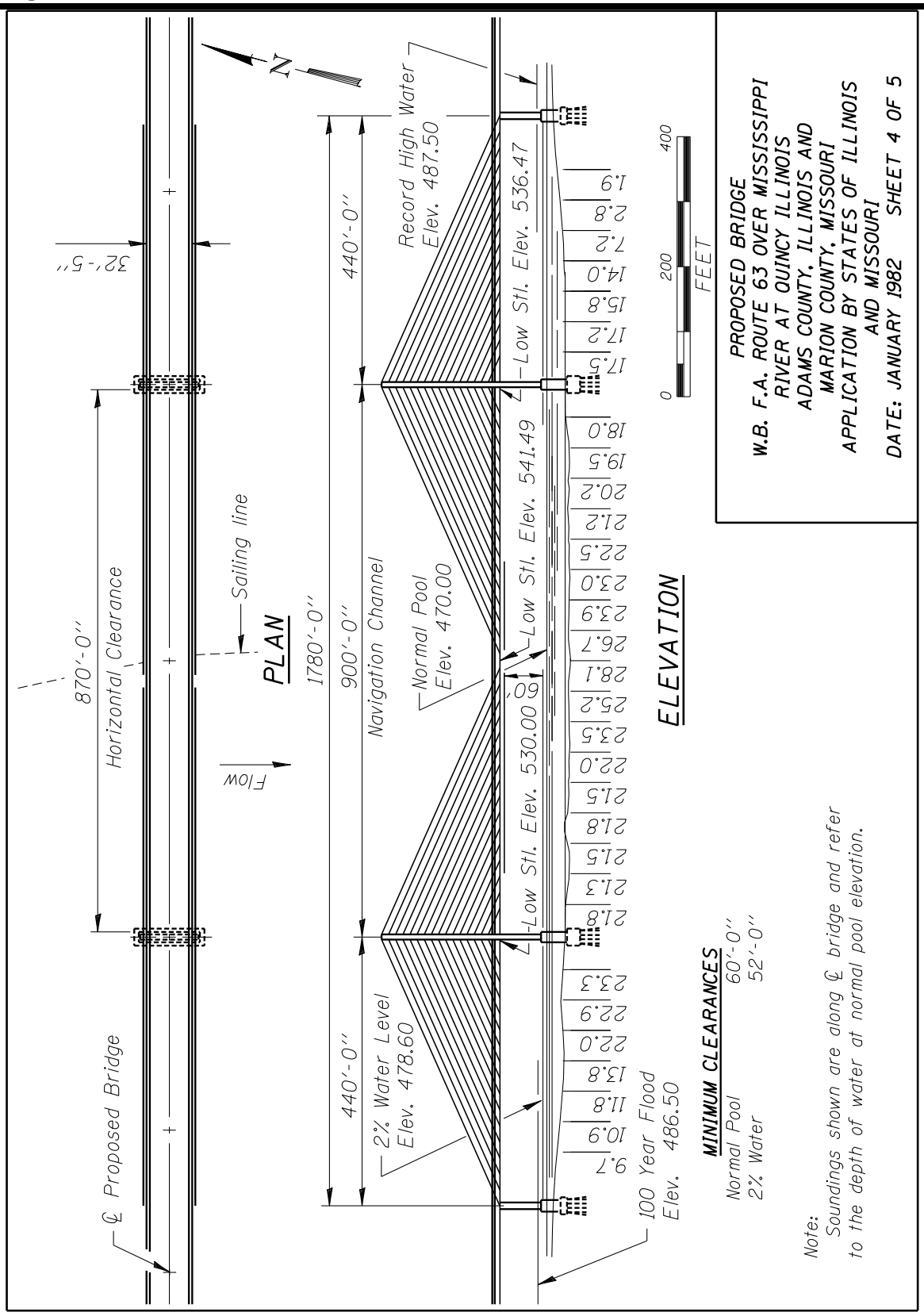

Figure 2.3.9.2-4

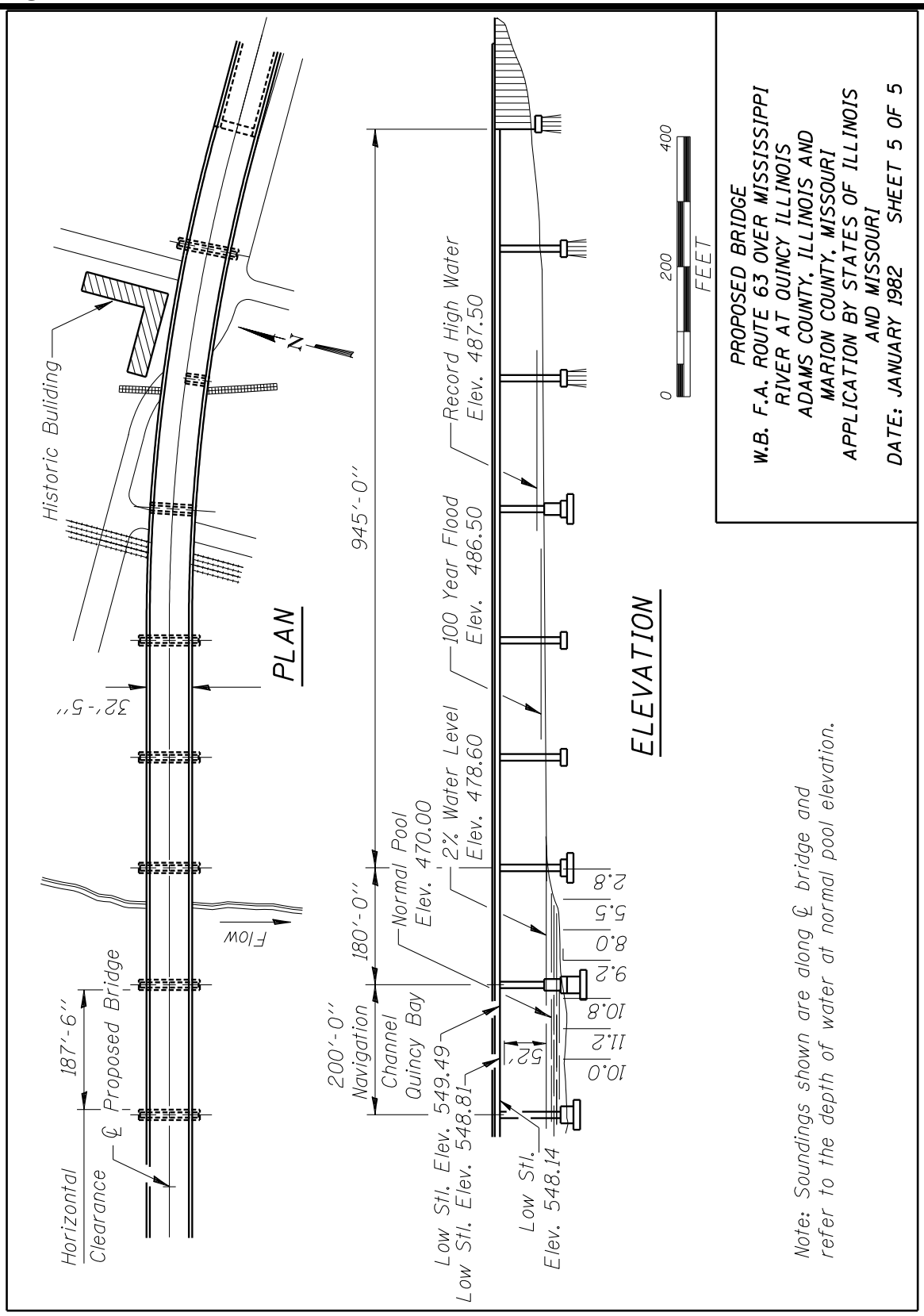

Figure 2.3.9.2-5

2.3.9.3 Bridges Over Navigable Waterways

It is the responsibility of the Engineer of Bridges and Structures to obtain from the Commandant, United States Coast Guard, a permit approving the location and plans for the construction or approval for alteration of any bridge on the State highway system over certain navigable waterways. Alteration in this context means any work that would permanently alter the navigation clearances.

Requirements for navigation lights and vertical clearance gages are established by the Coast Guard and become conditions of the permit.

A U.S. Coast Guard Permit is required when a bridge crosses waters which are used or susceptible to use in the natural condition or by reasonable improvement as a means to transport interstate or foreign commerce. The determination of the need for a permit is made by the USCG. The following table (Table 2.3.9.3-1) lists those waterways that in the past have required permits under the foregoing definition.

U.S. Coast Guard Permit Waterways

Eighth Coast Guard District - St. Louis, Missouri

Waterway	Upper Limit
Big Muddy River	Murphysboro, Illinois, Mile 37.5
Chain of Rocks Canal	In its entirety
Des Plaines River	Mile 291.1
Chicago Sanitary and Ship Canal	S. of 9th St. in Lockport
Illinois River	Confluence Kankakee and Des Plaines River, Mile 273.0
Kaskaskia River	Fayetteville, Illinois, Mile 36.2
Little Wabash River	Mile 39.7
Ohio River	In its entirety
Upper Mississippi River	In its entirety

Table 2.3.9.3-1

Carr Creek	Mile 2.4
Fountain Creek	Mile 5.75
Massac Creek	Mile 2.2
Big Grande Pierre Creek	Mile 6.0
Mary's River	Mile 14.0
Round Springs	Mile 0.8
Quincy Bay	In its entirety
Chaney Creek	Mile 0.5
Grays Bay	Mile 0.4
Larry Creek	Mile 0.9
Sonora Creek	Mile 0.6
Waggoner Creek	Mile 0.7
Riley Creek	Mile 0.4

Ninth Coast Guard District - Cleveland, Ohio

Waterway	Upper Limit
Waukegan Harbor	In its entirety
Chicago River:	
Main Branch	In its entirety
North Branch and	
North Branch Canal	Mile 7.29 (Addison Street)
South Branch	In its entirety
South Fork of S. Branch	In its entirety
Chicago Sanitary and Ship Canal	N. of 9th St. in Lockport
Calumet - Sag Channel	In its entirety
Little Calumet River	Calumet - Sag Channel
Calumet River	In its entirety
Lake Calumet	In its entirety
Grande Calumet River	State line

Table 2.3.9.3-1 (Cont.)

All Federally funded bridges over navigable waters which do not meet the above definition are exempt from the USCG permit process. The FHWA will make the exempt status determination in the early coordination phase of project development. Non-Federally funded bridge projects where the permit requirement is not apparent after an investigation into stream navigability shall be referred to the USCG for a permit requirement determination.

In the early stages of project development, the District shall consult with the Bureau of Bridges and Structures, who will assess the need for a Coast Guard permit. When a permit is required, the District should initiate coordination with the USCG at an early stage of project development and provide opportunity for the USCG to be involved throughout the environmental review process in accordance with Title 23 CFR, Part 771. The Bureau of Design and Environment should be consulted for coordination procedures and requirements.

2.3.10 Seismic Issues

There are regions of Illinois that have moderate to high seismicity (generally about the Southern ½ to ⅓ of the State depending on soil conditions) which require additional earthquake loading consideration for the design of new bridges and retrofitting of existing bridges. Regardless of region, seismic data shall be provided on TSL's for all structures except most walls and buried structures. Three sided precast concrete structures are considered buried structures. However, seismic data is required on the TSL in order to satisfy the detailing needs of the special provision. TSL's for retaining walls shall have seismic data only when the consequences of their failure during a seismic event could cause loss of life as determined by the Bureau of Bridges and Structures, or the Design Engineer of Record for Local Agency Projects.

The design earthquake return period in the AASHTO LRFD Specifications increased from 500 yrs. to 1000 yrs. beginning with the 2008 interims. The design earthquake return period for the sunsetted AASHTO LFD Code remains at 500 yrs. and will continue to be relevant to the Department for the foreseeable future with regards to reuse of existing substructures and retrofitting of existing bridges, temporary bridge construction and local bridges. Seismic Performance Zones (SPZ) and Seismic Performance Categories (SPC) in LRFD and LFD, respectively, are analogous in the sense that they represent differing levels of accelerations and requirements a structure shall be designed for. However, the design accelerations and requirements for the 1000 yr. event are increased over those of the 500 yr. event.

The method for determining the design acceleration and SPZ for a structure using the LRFD Code also changed significantly in 2008. See Sections 3.15.2 of this Manual and Section 3 of the LRFD Code for more information. Previously in the LRFD Code, the SPZ was only a function of the horizontal bedrock acceleration coefficient at a period of zero seconds unmodified for soil conditions at a project site. Soil type or Site Class (A through F), and the Spectral Acceleration on rock at a period of 1.0 sec (S_1) are now employed by the LRFD Code to determine the SPZ. Figures 2.3.10-1 through 2.3.10-4 indicate the extent of each SPZ, assuming various soil site classes found in Illinois which assist the engineer in estimating the SPZ for preliminary planning. The final SPZ shall be determined using the LRFD Code, shown in the Structural Geotechnical Report (SGR), and documented on the TSL seismic data.

A seismic map of Illinois for the 500 yr. design return period earthquake in accordance with the AASHTO Standard Specifications is given in Figure 2.3.10-5. The regions which encompass Seismic Performance Categories A to C are also indicated (there are no D regions in Illinois).

The potential for liquefaction shall be evaluated for all projects according to the requirements or their SPC or SPZ.

2.3.10.1 Seismic Design of New Bridges

All new (non-major) bridge construction on the State System and, as applicable, new bridges on the Local System shall be designed for the 1000 yr. design return period seismic event according to the LRFD Code and the Department's Earthquake Resisting System (ERS) strategy. Those new bridges on the Local System not designed for LRFD shall be designed for the 500 yr. design return period seismic event according to the LFD Code and the Department's ERS strategy. A "flexible" approach for the 1000 yr. design return period seismic event using the LRFD Code and the Department's ERS strategy may also be permitted for some local bridges in primarily rural and/or low ADT areas. See Sections 3.7, 3.10, 3.15 and Design Guide 3.15 for more detailed information.

For significant or critical bridges, e.g. major river crossings, it is likely that a much longer design return period (2500 years) will be warranted along with more sophisticated design methods than those in either AASHTO Specification. The Bureau of Bridges and Structures will make the determination of applicable seismic design criteria for major bridges on a case-by-case basis.

The selection of PPC I-beam and bulb T-beam superstructures for bridges in LRFD SPZ 3 and 4 (LFD SPC C) should be carefully considered by the engineer responsible for the TSL plan. Due to their higher mass (and therefore increased seismic design forces) relative to bridges with steel beam superstructures, PPC I-beam and bulb T-beam superstructures may not be the optimal choice.

Piles in regions of high seismicity (LRFD SPZ 3 and 4, or LFD SPC C) should not be battered. For bridges in LRFD SPZ 2 (LFD SPC B), the specification of pile batter should be considered on a case-by-case basis.

2.3.10.2 Retrofitting of Existing Bridges

All existing bridges on the state and local system which are undergoing superstructure replacement, or on occasion repair projects on existing LFD substructures and foundations, should meet the requirements of the 500 yr. design return period seismic event according to the 1995 FHWA Seismic Retrofit Manual and the Department's ERS strategy. For questions regarding specific interpretations of these documents, contact the Bureau of Bridges and Structures.

Significant retrofitting measures may include: adequate seat widths, "equivalent seat widths" through the use of longitudinal and/or transverse restraint devices, retrofitting columns and foundations, and isolation bearings. A minor overstress of the existing substructure for seismic loading may be considered on a case-by-case basis when in good condition. Factors which the engineer responsible for the BCR or TSL should consider include budgeted funds, ADT, bridge importance, bridge condition, remaining life, and retrofit vs. replacement cost. For detailed guidelines regarding seismic evaluations of existing structures, please refer to the Bridge Condition Report Procedures and Practices Manual.

Bridges along (or over) Earthquake Response Routes should be carefully evaluated during the planning phase for their importance and condition. See the IDOT Earthquake Preparedness and Response Plan for a listing of those routes in Section VI. An easy detour around a bridge may lower its importance to life safety which should be coordinated by the district. On a project-by-project basis at the discretion of the BBS, significant or critical bridges along Earthquake Response Routes may be retrofitted according to the 1000 yr. return period. In these cases, the 2006 FHWA Seismic Retrofitting Manual and the Department's ERS strategy should be used.

2.3.10.3 Seismic Data

When required, the following data shall be given on the TSL for AASHTO LRFD Bridge Design Specification jobs when the planned level of seismic resistance to be provided is for the 1000 yr. or 2500 yr. design return period earthquake: Seismic Performance Zone (SPZ), Design Spectral Acceleration at 1.0 sec. (S_{D1}), Design Spectral Acceleration at 0.2 sec. (S_{DS}), and the Soil Site Class.

When required, the following data shall be given on the TSL for jobs when the planned level of seismic resistance to be provided is for the 500 yr. design return period earthquake according to the AASHTO Standard Specifications (LFD design): Seismic Performance Category (SPC), Horizontal Bedrock Acceleration Coefficient (A), and the Site Coefficient (S). Also, the 1995 FHWA Seismic Retrofit Manual (500 year) shall be listed in the Design Specifications as applicable.

See Section 2.3.14 for examples of seismic design data specification on TSL plans for both the LRFD and LFD Codes. See Section 3.15.7 for guidance in retrofitting designs.

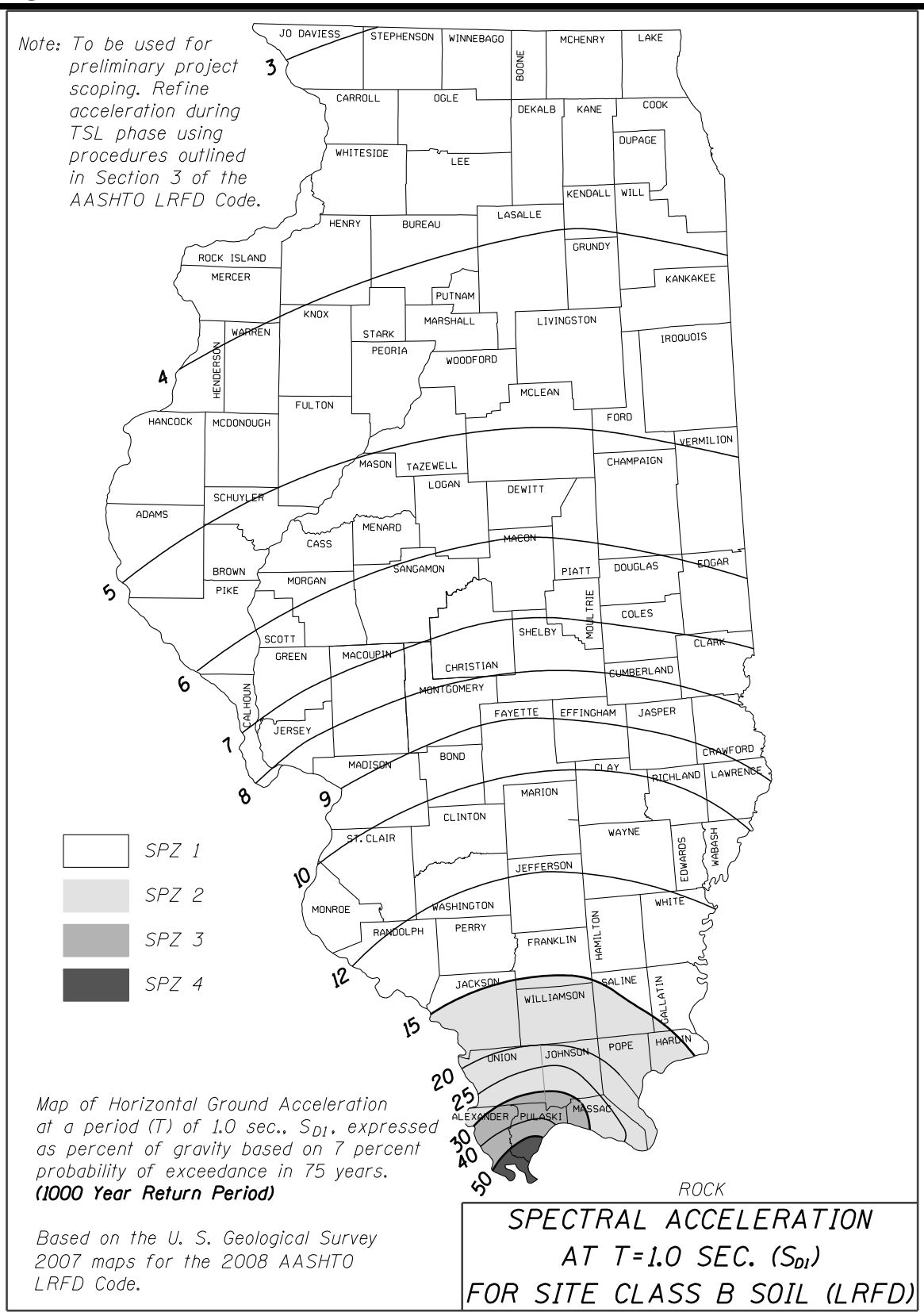

Figure 2.3.10-1

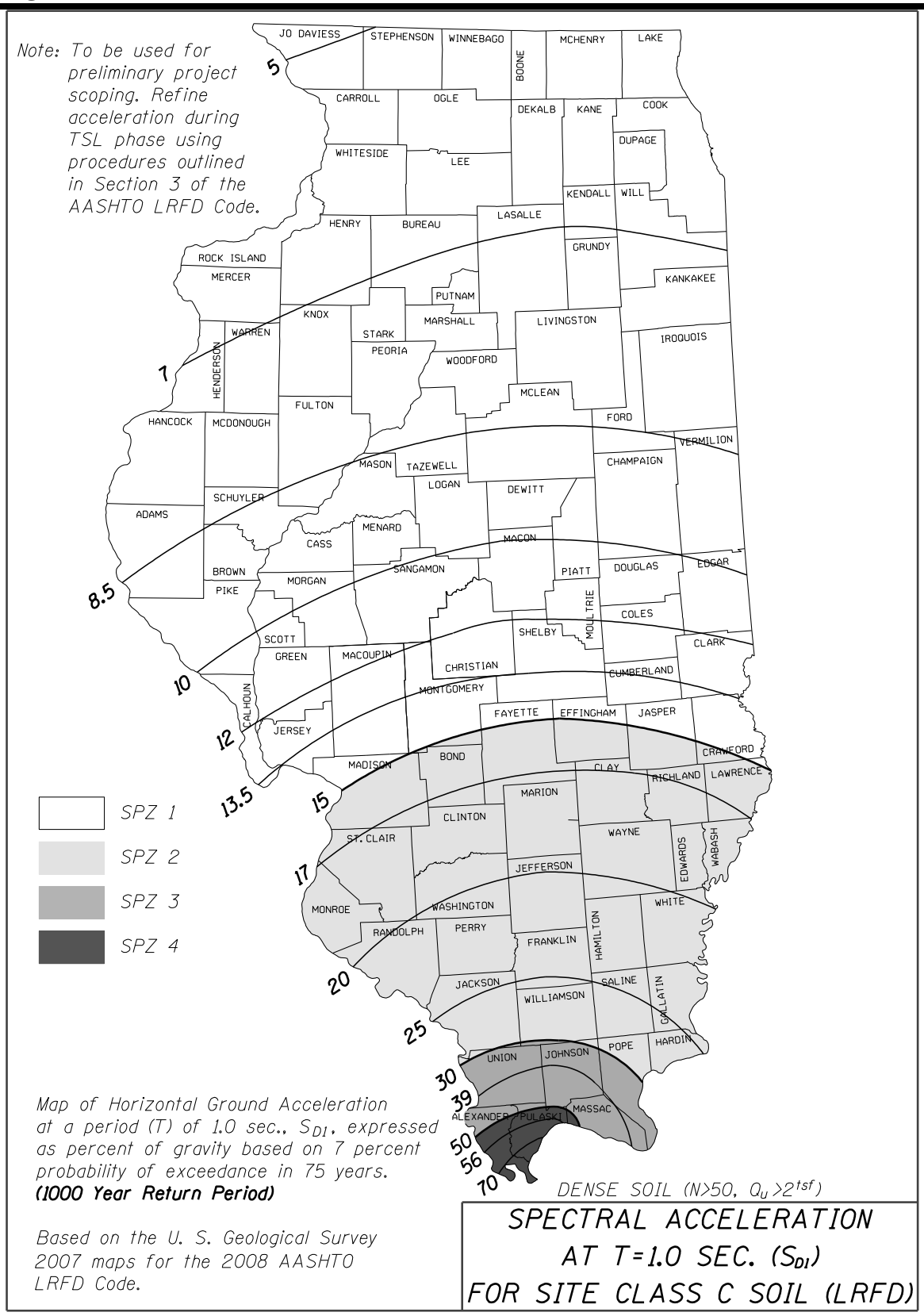

Figure 2.3.10-2

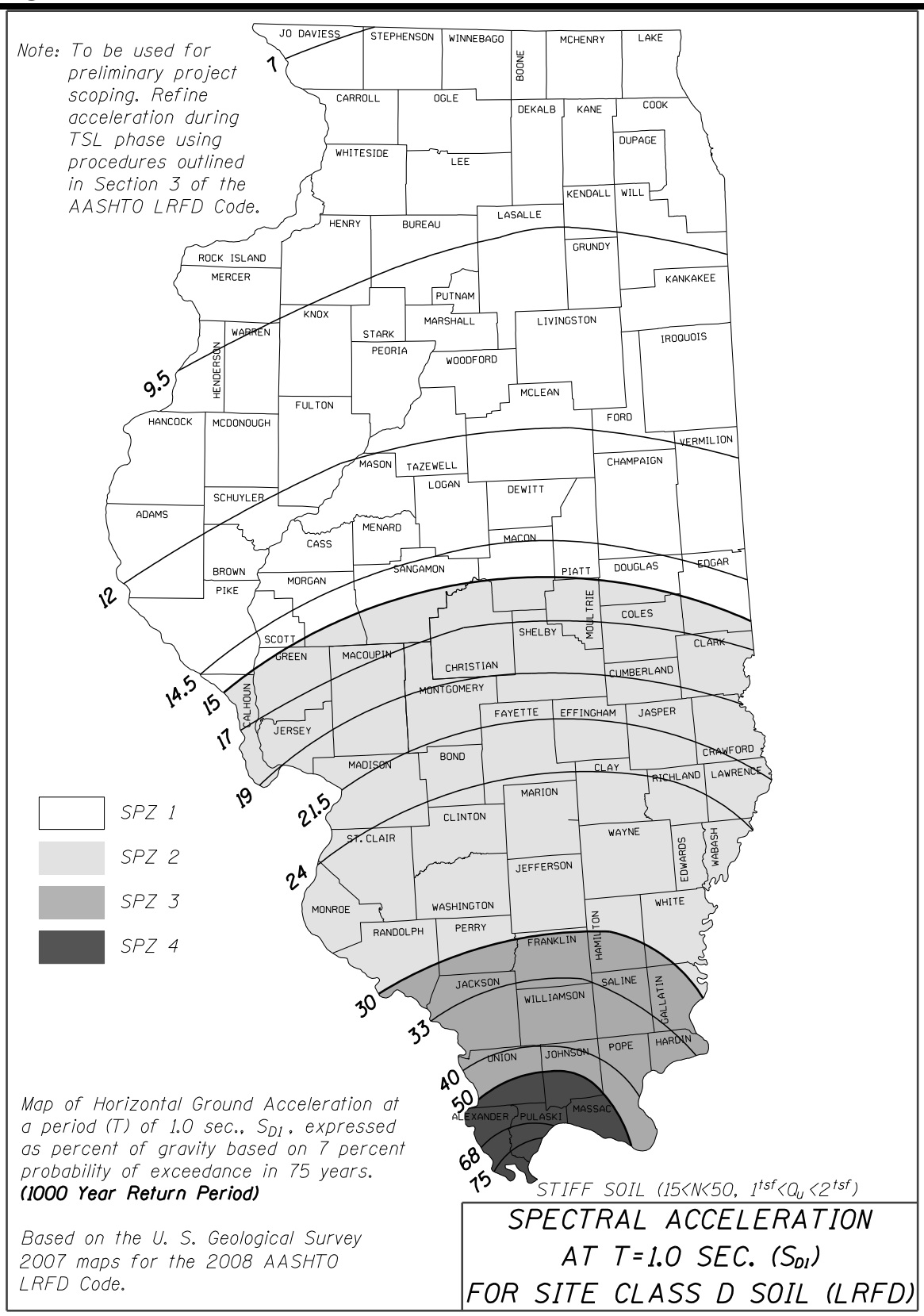

Figure 2.3.10-3

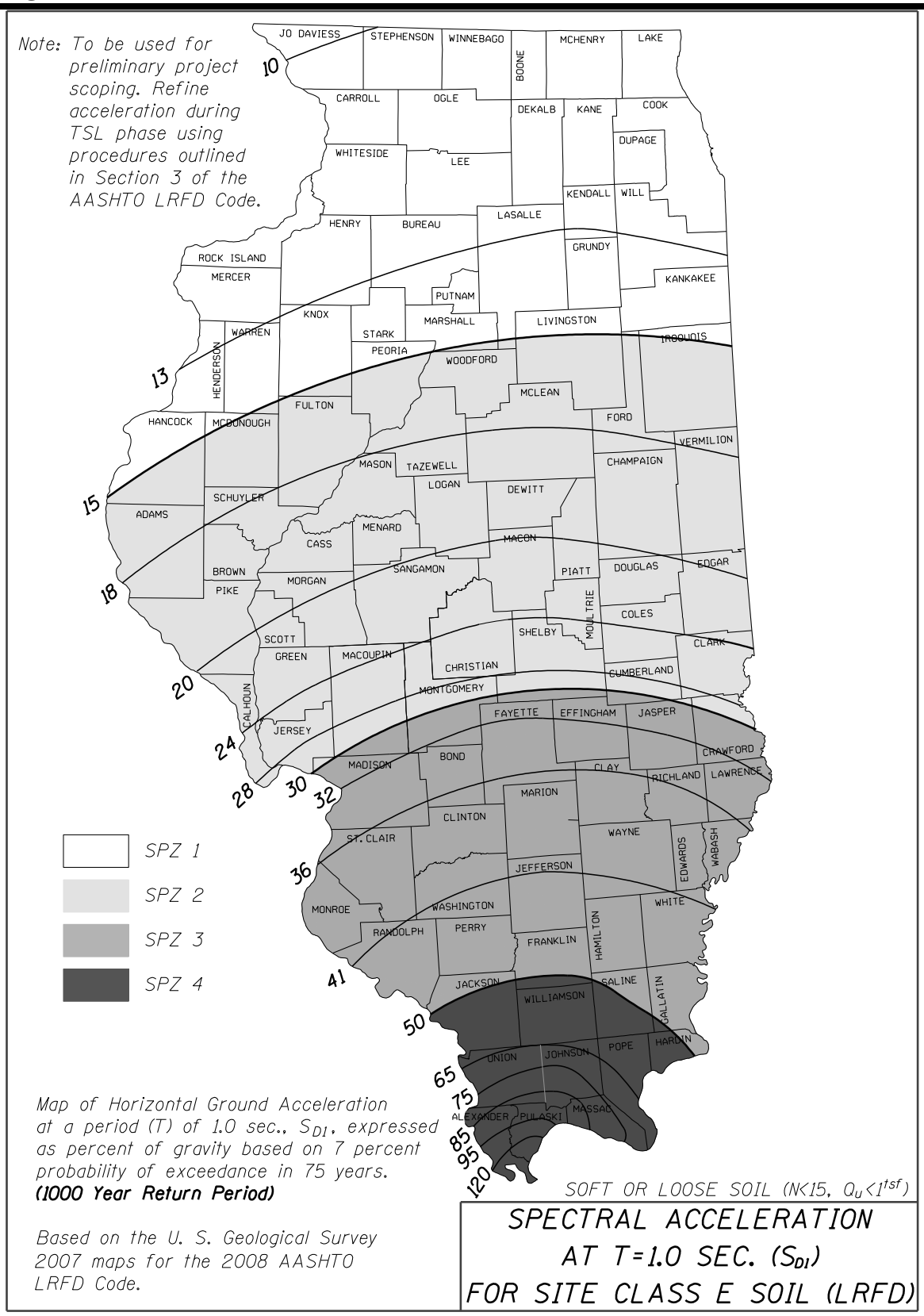

Figure 2.3.10-4

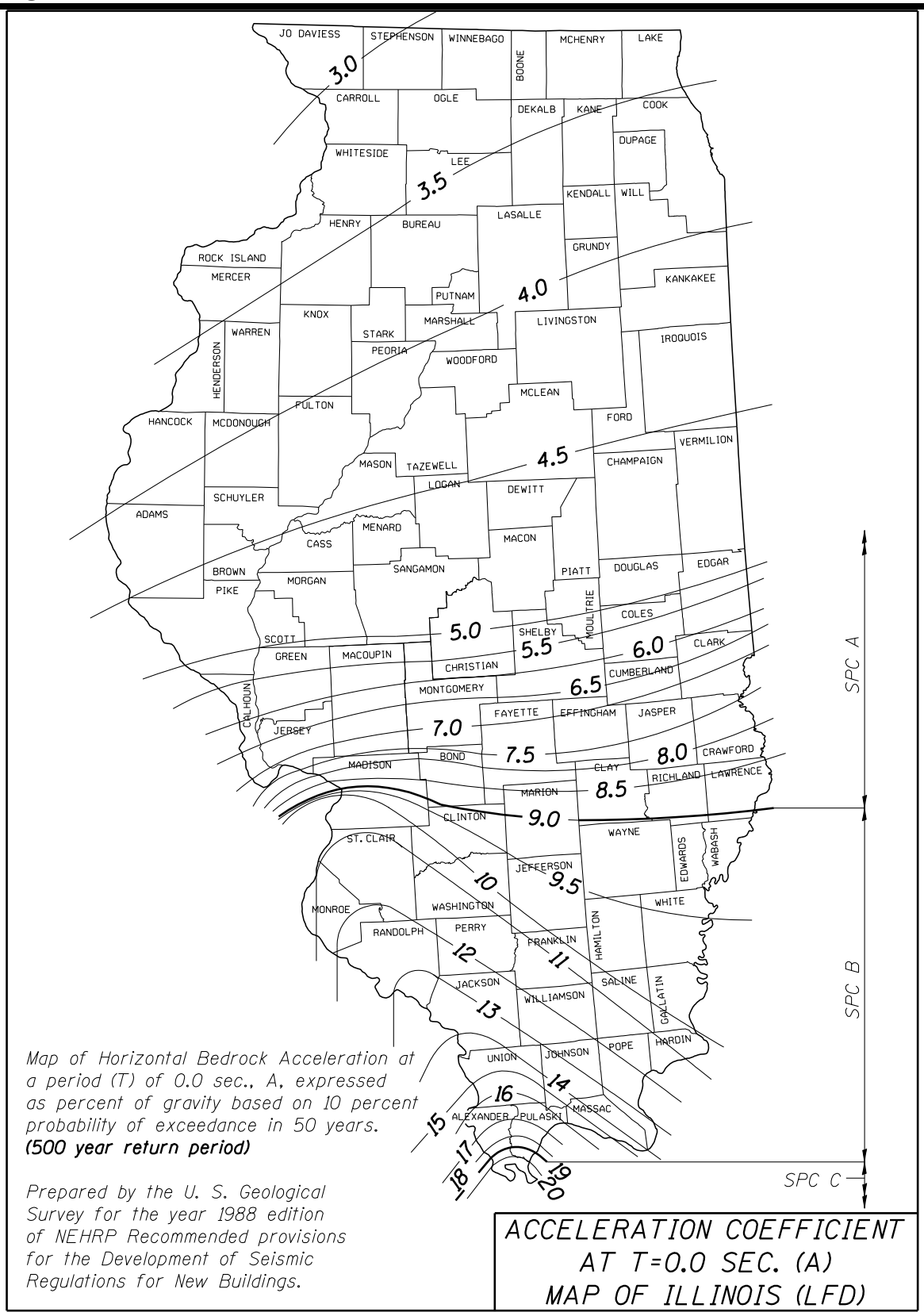

Map of Horizontal Bedrock Acceleration at a period (T) of 0.0 sec., A, expressed as percent of gravity based on 10 percent probability of exceedance in 50 years.
(500 year return period)

Prepared by the U. S. Geological Survey for the year 1988 edition of NEHRP Recommended provisions for the Development of Seismic Regulations for New Buildings.

Figure 2.3.10-5

2.3.11 Culvert and Three Sided Precast Concrete Structure Selection Process

The selection of whether a structure over a waterway should be a culvert, a three sided precast concrete structure or a bridge is heavily influenced by the hydraulic opening. As the hydraulic opening becomes larger, the selection process for structure type progresses from culvert to three sided precast concrete structure to bridge. Cost, future maintenance, profile grade, staging, skew, soil conditions and alignment are also important variables which should be considered. Culverts generally have low future maintenance; however, culverts should not be considered for waterways with a history or potential of debris to avoid channel cleanout maintenance. In these cases a three sided precast concrete structure may be more appropriate. Three sided precast concrete structures have the advantage of larger single and multiple openings, ease of construction, and low future maintenance costs.

Precast culverts and three sided precast concrete structures are acceptable options for pedestrian tunnels. The joints shall be sealed and the barrel covered with a full waterproofing membrane system. To provide for drainage, geocomposite wall drains shall be used in lieu of weep holes.

2.3.11.1 Culverts

The plan preparation and structural design of cast-in-place multiple cell box culverts remains with qualified consultants or the BBS in conformance with current plan development procedures. Additional details and guidelines can be found in the Culvert Manual and the TSL checklist for culverts given in Section 2.3.13.2. However, precast multiple cell box culverts meeting the limitations described below may be undertaken by the Districts at their discretion. The development of Design plans for cast-in-place single box culverts remains with the Districts with assistance from the Culvert Manual and the BBS. The option of a precast or a cast-in-place multiple box culvert should be evaluated and determined prior to the TSL plan phase. If a cast-in-place multiple box culvert is required or preferred by the District, a note on the TSL plan disallowing the precast option shall be provided.

The following guidelines are provided when using precast multiple cell box culverts:

2.3.11.1.1 General

Relatively small projects may not be economical if end sections, wingwalls/aprons are cast-in-place. For all culverts, especially short culverts (under 2 lane roadways), the following guidelines shall be considered:

1. Use precast end sections whenever possible, subject to hydraulic acceptability.
2. Use cast-in-place wingwalls with aprons when precast ends are not feasible.
3. Avoid using a cast-in-place end barrels with cast-in-place wingwalls as much as possible.
4. For skewed culverts, lengthen the culvert as required (even if additional right-of-way is needed) to allow the use of precast end sections whenever possible.

2.3.11.1.2 Use Limitations

1. Cambering the box will not be allowed.
2. A minimum cover of 6 in., measured from the pavement surface at the roadway edge, shall be provided.
3. All headwalls for multiple cell precast concrete box culverts shall be collared around the end of the precast sections. Because of the size and weight of these units, it is anticipated that headwalls for multiple cell precast concrete box culverts will be cast-in-place similar to the details shown in Figures 2.3.4-3 and 2.3.4-4 of the Culvert Manual. Individual precast end sections similar to those detailed in Figures 2.3.4-1, 2.3.4-2, 2.3.4-5 and 2.3.4-7 of the Culvert Manual may be used if hydraulically acceptable.
4. Precast box culvert designs shall provide hydraulic equivalence to conventional cast-in-place designs. This may occasionally require a larger precast culvert size to compensate for the additional inlet losses and the adjustment to standard sizes.
5. The use of multiple cell precast concrete box culverts is not recommended under the following conditions:
    a. Where high settlement could be anticipated.
    b. Where design flood velocity and stream bed soils raise concern for scour.
    c. Where clogging from debris or sedimentation is a concern.
6. The use of multiple cell precast concrete box culverts under the conditions listed below should be avoided. Consultation with the BBS before use is strongly recommended.
    a. For special designs such as when set directly on rock.

b. Conditions where pile foundations would be required.

2.3.11.1.3 Processing Requirements

1. Consistent with current processing procedures for all bridge and multiple cell culvert projects, submittal of a BCR to the BBS for review and approval is required. The BCR for multiple cell precast concrete box culverts, will, however, be the tool with which the BBS documents its approval or disapproval of that structure type for a specific location. In order to make these determinations, structure boring data will be required during the BCR submittal.
2. The processing of TSL plans or Final plans for multiple cell precast concrete box culverts to the BBS for review and approval will not be required except for structures on the interstate system.

Installation, Method of Measurement and Basis of Payment for Precast Concrete Box Culverts are included in the Standard Specifications. The Standard Specifications also requires joints between units to be sealed to assure no embankment material is allowed to pass through.

The BBS is available to assist the District in working out any problems that may arise during plan development and clarifications of any questions relative to the interpretation of these requirements.

2.3.11.2 Three Sided Precast Concrete Structures

Three sided precast concrete structures offer a cost effective, convenient solution for a variety of bridge needs. The ease and short duration of construction make them an attractive alternative which may be considered on certain projects. A TSL preparation checklist for three sided precast concrete structures is provided in Section 2.3.13.2.

Three sided precast concrete structures are proprietary systems where the primary structural unit is designed after the contract is awarded. There are several systems approved for use in Illinois that the contractor may choose from and they may be found in Guide Bridge Special Provision (GBSP) # 15. Each of these systems has unique design limitations detailed on their web sites and the planner should carefully consider these limitations when determining whether a three sided precast concrete structure would work on their project. The FHWA requires at least two

independent systems capable of satisfying the project needs in order to utilize a three sided precast concrete system.

2.3.11.2.1 Use Limitations

The following structure limitations shall be considered by the Planner when considering whether a three sided precast concrete structure is appropriate for a project.

1. Skew. A zero degree skew is preferable but skews may be accommodated in a variety of ways. Skews should be limited to 5 degree increments when practical. The range of skew is dependent on the design span and the fabrication limitations of each proprietary system. Some systems are capable of fabricating a skewed segment up to a maximum of 45 degrees. Other systems accommodate skew by fabricating a special trapezoidal segment. If adequate right-of-way is available, skewed projects may be built with all right angle segments provided the angle of the wingwalls are adjusted accordingly. The planner shall consider the lay out of the traffic lanes on staged construction projects when determining whether a particular three sided precast concrete structure system is suitable.
2. Span. The maximum clear span permitted by the Department is 60 feet measured at right angles from the inside face of sidewalls. If a railing is required to be attached to the structure, the engineer shall investigate whether all design requirements can be satisfied before specifying a large clear span.
3. Rise. The maximum rise of an individual segment is 13 feet. This limit is based on the fabrication forms and transportation. The maximum rise of the segment may also be limited by the combination of the skew involved because this affects transportation on the truck. Certain rise and skew combinations may still be possible but special permits may be required for transportation. The planner should verify this with each proprietary system under consideration. The overall rise of the three sided structure should not be a limitation when satisfying the opening requirements of the structure because the footing is permitted to extend above the ground to meet the bottom of the three sided segment.
4. Cover. The minimum cover is limited to the thickness of the roadway pavement measured at the edge of pavement. This typically equates to a minimum cover of 1'- 6" when considering the aggregate, asphalt sub base and final surface. Approach slabs are not required.
5. Embedment. A 4 foot minimum embedment measured from bottom of footing to streambed elevation is required.

2.3.11.2.2 Planner/Designer Responsibilities

1. For each project, the above limitations and combinations thereof shall be verified through the approved manufacturers that are listed in the special provisions. In addition, the cost of any temporary soil retention system shall be included in the economic evaluation. Complex soil retention systems due to stage construction may negate the cost effectiveness of staging a three sided precast concrete structure.
2. Hydraulic and waterway opening requirements shall be handled similarly to any other project. A scour analysis shall be performed.
3. Foundation borings and an SGR are required. See also Section 2.3.11.4.
4. The actual design of the three sided precast concrete structure is the responsibility of the supplier. Shop Drawings for the three sided precast concrete structure sections and all other precast elements along with formal structural calculations, shall be submitted to the BBS for approval. Shop Drawings shall be certified by the supplier as being designed in accordance with the applicable AASHTO specifications. The supplier shall also indicate any additional backfilling requirements that shall be met beyond those found in the Standard Specifications and shall show the limits of those backfilling requirements.

2.3.11.2.3 Site Limitations

Three sided precast concrete structures may be impacted by the following conditions:

1. Flowline is underlain by scour susceptible sandy soils. A scour evaluation is required and protective measures, if necessary and appropriate, shall be provided.
2. High seismicity areas, unless special foundation treatments and/or anchoring devices can be provided effectively and economically.
3. Weak soil conditions which would require pile foundations.

When the above conditions would impose relatively high additional costs, a cost comparison is required to justify a three sided precast concrete structure compared to other bridge/culvert alternatives.

2.3.11.2.4 Plan Processing Procedures

1. TSL plans are required for all projects utilizing a three sided precast concrete structure.
2. TSL and Final plans for three sided precast concrete structures shall identify the size (span x rise), length, and skew angle (in 1° increments) of the bridge.
3. A detailed design of three sided precast concrete structures with precast headwalls and precast wingwalls is not required on the Final plans. However, final plans shall include all geometric dimensions and a detailed design for all cast-in-place foundation units and cast-in-place headwalls and wingwalls. In addition, General Note 46 shall be shown on the plans.
4. Final plans shall include the pay item Three Sided Precast Concrete Structures, *Span x Rise* and applicable pay items for the remainder of the substructure elements.
5. Final plans shall be submitted along with all pertinent special provisions to the BBS for review and approval.
6. Shop Drawings of all precast elements including the detailed design of the three sided precast concrete structure shall be prepared and submitted by the supplier for review and approval. The Shop Drawings will be incorporated as part of the As-Built plans.

To facilitate the initiation of this type of project, the BBS is available to assist the Districts/Consultants in working out problems which may arise during plan development.

2.3.11.3 Hydraulic Issues

The invert elevations of all culverts at stream crossing locations shall be set a minimum of 3 in. below the lowest point in the stream cross section. This will ensure that culvert inverts will not become a barrier to fish migration during low water. The size of the culvert opening does not need to be increased to compensate for lowering the invert 3 in. Locations which may warrant lower invert elevations shall override this policy.

2.3.11.4 Foundation Issues

Many of the foundation type issues discussed under Foundation Component Selection in Section 2.3.6.3 for bridges are also applicable to foundations for box culverts and three sided structures. The SGR should provide planning and design recommendations to determine the most cost effective and feasible foundation treatment to be used on the TSL plans.

2.3.11.4.1 Culverts

Box Culverts have some unique geotechnical issues that should be evaluated to ensure adequate long term performance of both the box and the wingwalls.

The most common issues affecting the box portion of a culvert structure are mitigating differential settlement and ensuring constructibility of the bottom slab. Boxes are often located in existing stream channels where the new loading from a culvert and fill above will likely generate some settlement. It should be noted that the theoretical new loading at the base of the box is not as large as the new full height of soil fill loading adjacent to the box which can result in differential settlement along the roadway alignment. Since portions of the new box alignment are often located on previously unloaded channel sediments while other segments may be placed through preloaded existing embankment, concern for differential settlement along the box alignment should also be considered. Consequently, it is critical that the designer evaluate the variation in applied loadings as well as the changes in foundation soil conditions to determine if any ground modification is necessary. Cast-in-place boxes have some tolerance to bridge across settlement prone areas but can crack when the differential foundation support is excessive.

As an alternative to ground modification, a box can be designed and constructed in non-continuous segments which are jointed by collars to allow articulation and prevent overstress. Known as segmenting and cambering, the collar joints are placed at locations where changes in surcharge loading or foundation stiffness occur, and constructed at an elevation which will settle into the desired location. The most common configuration involves dividing the box into three segments with the center segment located directly below the level portion of the embankment. The center segment and its collars are detailed to be constructed above the desired flow line by 90 to 110% of the amount of estimated settlement, while the remaining outer segments are shown sloping from the collar to the head wall which is normally located above the flow line by about 10 to 25% of the estimated settlement amount.

Precast boxes are articulated and can handle some differential settlement. However, when excessive movement is expected, the joints between the box sections can separate, causing the geotextile joint fabric to fail and allow soil to enter the box. In some cases, joint separation may decrease, causing contact and damage to the precast units. For these reasons, precast box culverts are normally only used at sites where minor amounts of settlement are expected or at locations where the foundation soils have been modified to mitigate settlement.

Where inadequate soil conditions are present to support the proposed loadings of either precast or cast-in-place boxes, removal of these soils and replacement with a coarse aggregate (or in less severe cases, re-compacted cohesive embankment) can be an economical treatment which provides the required stiffness or uniformity in foundation support. The cost effectiveness of this solution versus other ground modifications or structure type changes should be verified. It is normally used when removal depths are not excessive, since concerns over cut slope stability or feasibility of stage construction soil retention can necessitate the use of other options. Removal and replacement also typically requires some field verification and adjustment to plan limits in order to address local problem zones or areas of uncertainty between borings. This may mean reduced cost if the engineer finds the encountered conditions to be better than that indicated in the boring data. The designer should determine and show in the plan view the horizontal limits (stations and offsets) of the removal at the base of the excavation. The elevation view should show the elevations at the base of the removal. The plan and elevation removal limits should closely correspond to the boring data so that the inspector can determine the material the designer intends to be removed and what can remain. Since conditions encountered upon excavation can differ, the Geotechnical and Field Construction Engineers may need to extend or reduce the limits to address the as encountered conditions. Along with the plan and elevation limits, the following note should be included.

> *The limits and quantities of removal and replacement shown are based on the boring data and may be modified by the District Geotechnical and Field Engineers for variable subsurface conditions encountered in the field.*

Excavation of unsuitable material shall be paid for as “Removal and Disposal of Unsuitable Material for Structures”. The replacement material and capping requirements are dependent upon the application, considering the anticipated loading, placement conditions, structure settlement tolerance, and cost of the replacement material. In cases such as replacement below

box culverts where dewatering and compaction may not be possible, the pay item "Rockfill" is commonly used. In these cases, the following note should be added.

> *The Rockfill shall be capped with 6 in. of CA7 and satisfy the Standard Specifications unless otherwise indicated in the Special Provisions. The cost of the capping material shall be included in the pay item for "Rockfill".*

In cases where the replacement material strength requirements are less than Q_u=1.25 tsf., the placement conditions are well above the water table and quantities are relatively large, embankment can be specified as the replacement material since it is less expensive. Figure 2.3.11.4.1-1 gives an example of elevation and plan view details for removal and replacement.

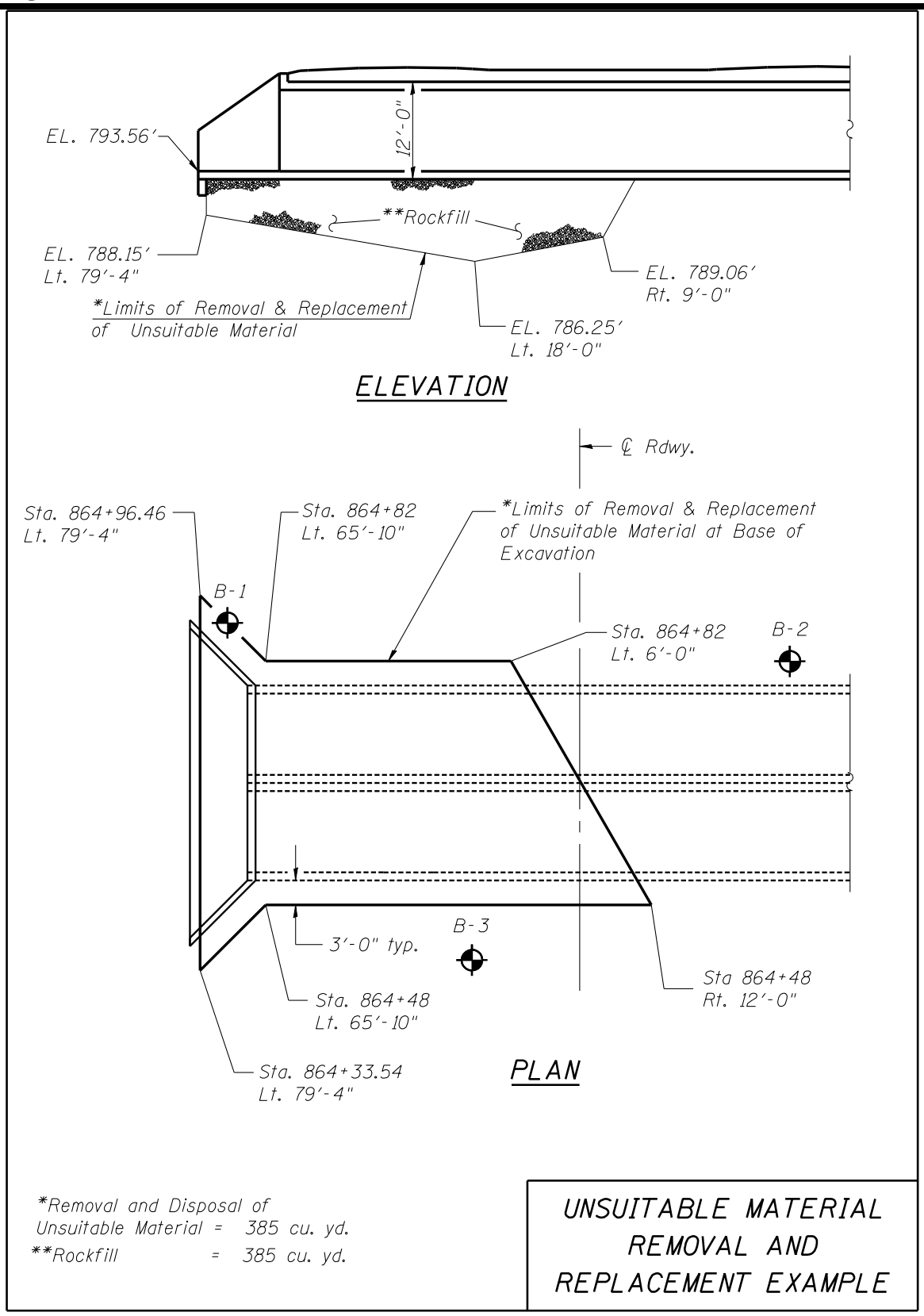

Figure 2.3.11.4.1-1

When no removal and replacement is required, the foundation soils can become pumpy and unstable due to construction equipment loadings during excavation, rebar placement, forming and concrete placement. In these cases, the Contractor may need a so-called "working platform" to properly construct the culvert bottom slab. The need for such platforms is dependent on the type, thickness and strength of the soils encountered, the method of water diversion selected by the Contractor, precipitation, construction sequence, and the time of the year the box is constructed. Since the borings are often taken in locations that do not give the designer accurate information about the sediment in the channel and considering the many factors cited above that affect the need for a platform, the designer is usually not in a position to specify its use and thus should not in the plans. The Field Engineer or District Geotechnical Engineer should make the determination that a "working platform" is required during excavation based on the field conditions. Thus, any removal on the plans is understood to be related to the long term foundation performance of the box and embankment, rather than a tool to facilitate construction.

When the estimated water surface elevation of the stream water exceeds 4 ft., construction of a water diversion system may be very difficult. Maintaining dry conditions for bottom slab construction can be problematic in granular foundation soils below the water table, as their permeability may not allow normal pumping to keep up with the water inflow through these soils.

In addition to the geotechnical issues discussed above affecting the box portion of the culvert, the culvert wingwalls are the other important element that is heavily influenced by the foundation soils and wall backfill. In most cases, a horizontal wing is the most economical and preferred wall type. They are supported by the box rather than the foundation soils and thus, their feasibility evaluation is structural rather than geotechnical. In cases where the culvert height and/or wing length/skew will not permit the use of horizontal wings, L-types wings provide and excellent alternative. The L-type wing is structurally connected to the box at the cutoff wall and via the wing footing/bottom slab connection but is not connected above the flow line. Thus, the foundation soils, particularly toward the end of the wing, should assist in providing vertical and lateral support. The standard designs provided in the Culvert Manual can be used when the factored applied bearing pressures do not exceed the factored bearing resistance of the foundation soils. When the bearing pressures are not adequate, or the structural limits shown in the Culvert Manual are exceeded, or if precast boxes are used, other soil dependent/box independent wings should be used. These wings include MSE, T-type, gabion, sheet piling, soldier piling, apron supported, and precast modular. MSE is normally not economical due to the small quantity and raises concerns in some hydraulic applications about loss of granular backfill or foundation soils. T-type wings are fairly

common as their aesthetics, alignment and foundation design can be modified to accommodate most any application. However, the resulting foundation expense, particularly when either a cofferdam or piles are required, may suggest that another wing type may be more appropriate. Gabion wings can be specified to follow a wide range of curved alignments and face batters. They can be placed through limited depths of water, but should be supported on reasonably good foundations soils to resist overturning and bearing pressures. Sheet pile walls also allow installation through open water and at locations where bearing capacity may not be adequate for gravity walls. Soldier piles are used where sheeting can not be driven because H-piles can penetrate farther or can be drilled when required. However, they require either a cast-in-place or other facing system. Cast-in-place aprons are often used with precast boxes and should be analyzed like a "reverse L" wall design as the apron and cutoff wall provides the foundation. The apron's lack of embedment and soil weight makes them difficult to design and should be used where proper foundation soils (sliding and bearing pressure) are present and where the skew angle is not excessive. Various precast modular wingwall systems have also been used, most commonly with precast boxes and three sided structures to make the entire structure precast.

2.3.11.4.2 Three Sided Precast Concrete Structures

The specifications for three sided precast concrete structures permits the contractor to substitute cast in place for precast footings, wingwalls and headwalls, and visa versa when cast in place is specified unless prohibited on the plans. Three sided structures should be provided with adequate foundation support to satisfy the design assumptions permitting their relatively thin concrete section. These foundations are designed and provided in the plans using the worst case loadings which are available from approved pre-cast vendors. Spread footing foundations are most commonly used since they prove cost effective when rock or scour resistant soils are present with adequate bearing and sliding resistance. The use of precast spread footings shall be controlled by the planner and shall only be allowed when soil conditions permit and shall not be allowed to bear directly on rock or when rock is within 2 feet of the bottom of the proposed footing. When lower strength soils are present, or scour depths become large, a piles supported footing shall be used. The lateral loading design of the foundation is important because deflection of the pile or footing should not exceed the manufacturers' recommendations to preclude cracks developing.

In addition to foundation type, the wingwall type shall be provided on the TSL and Final plans. Wing selection issues are similar to those discussed in the culvert section above. The restrictions

on the use of cast in place or precast wings and headwalls shall be based on site conditions and the preferences of the owning District. These restrictions shall be noted on the TSL and final plans.

2.3.11.5 Culvert Nesting Ledge Issues

Multiple box culverts with a clear height of 4 ft. – 0 in. and greater shall be provided with 1 in. ledges, 4 ft. – 0 in. long on each side of all interior walls near the downstream end when these walls contain a single plane of reinforcement bars located at the wall center. These ledges provide suitable nesting sites for certain bird species (phoebes and barn swallows) that tend to nest in man-made shelters. The ledge detail is depicted in Figure 2.3.11.5-1.

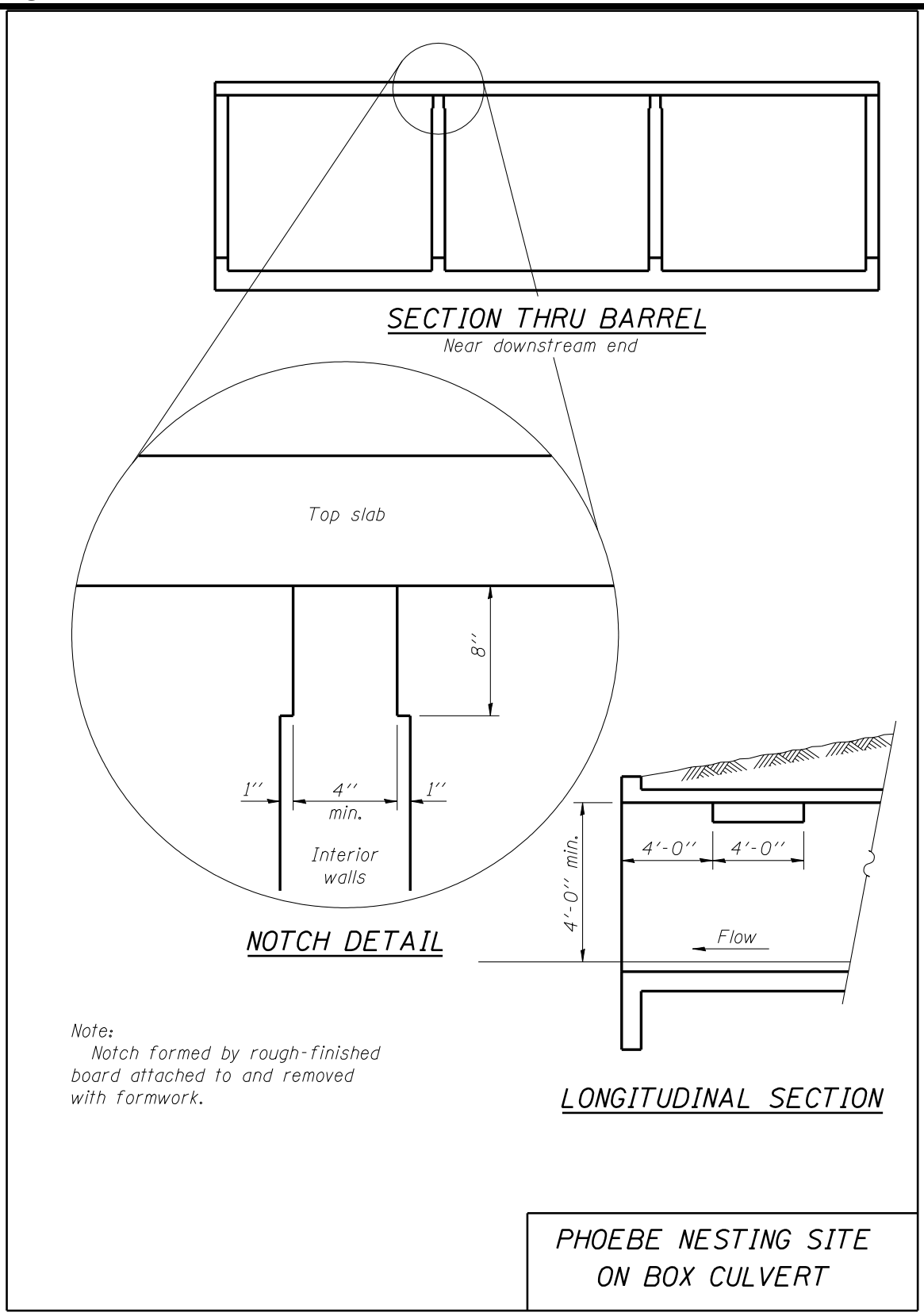

Figure 2.3.11.5-1

2.3.12 Retaining Wall Selection Process

Many factors such as geometric limitations, geotechnical site conditions, aesthetics, structural feasibility, construction equipment access, and traffic staging affect retaining wall type selection. The engineer responsible for the TSL plan should identify and evaluate these issues, and conduct feasibility analyses which leads to a retaining system selection that is cost effective.

To reduce both initial and long term maintenance expenses, efforts should be made to minimize overall wall length and exposed height. This can be accomplished by utilizing slopes either in front or behind the wall as well as evaluating various wall locations/alignments. During this process, there are a number of right-of-way, roadway cross section, drainage, utility, and construction limitations that should be considered.

The exposed retention height for a wall is established from finish grade elevations found within the roadway cross sections. The engineer responsible for TSL development should work closely with the roadway engineer when determining finish grade cross sections along the length of the wall. The bottom of wall elevations should be determined to accommodate any drainage/utility excavation proposed in front of the wall and satisfy the minimum embedment necessary for the wall type selected. The final top of wall elevations should be established to satisfy the cross section retention requirements while forming an aesthetic top of wall profile. Where the wall face is visible to traffic or commonly viewed by the public, the use of form liners or other wall face texturing should be strongly considered. The need for coping, traffic barrier, noise wall/sight screen, railing or fencing mounted on the top of wall should also be determined and coordinated with the District.

In addition to establishing the required wall retention geometry and other site design constraints, geotechnical issues have a substantial impact on the wall type section process. The majority of loadings applied to the structure as well as the capacity of the foundation are controlled by the soil conditions present. The SGR generally contains all geotechnical analyses, foundation and wall type recommendations, and design parameters required to assist in wall type feasibility and cost analyses. Substantial coordination between the structural and geotechnical engineer during the SGR development process is necessary to ensure appropriate design parameters and recommendations are provided. Section 2.3.6.3 should also be referenced when evaluating foundation type options. Section 3.11 and the IDOT Geotechnical Manual should be referenced

for detailed technical information concerning the design and subsurface investigation of retaining walls.

There are four retaining walls types commonly built in Illinois. These are mechanically stabilized earth (MSE), cast-in-place concrete T-type, soldier pile, and permanent sheet pile. Soil nailed, precast modular, segmental block, gabions, and other specialized wall systems have been utilized by the Department on a limited basis when their unique wall properties lend themselves to specific project conditions. MSE and cast-in-place walls are most economical and better suited for use in "fill" sections, while soldier piles and permanent sheet pile walls are generally most advantageous in "cut" section retention applications.

Typical cross section and details should be shown on the TSL plan. Sample retaining wall TSL plans are given in Section 2.3.14. Policy and procedures for the design of retaining walls are given in Section 3.11.

2.3.12.1 MSE Walls

MSE walls provide one of the most cost effective and durable wall structures available. The walls internal stability is designed by the wall vendor during construction to provide over 75 years of design life. The cost savings advantage is most prevalent on projects with large bid quantities or on structures where the maximum wall height is relatively tall. Locations with short wall heights or lengths often lend themselves to other wall types.

Precast panels avoid the typical cracking that occurs on CIP walls and provides superior aesthetics due to their articulated panel pattern. Panels can be cast with a smooth face or form liners can be specified to produce a variety of cast patterns. MSE walls can also be constructed along curved alignments. Both design and construction time is reduced when an MSE wall is selected.

The TSL shall provide the "top of exposed panel line", the "finished grade line at front face of wall" and the "theoretical top of leveling pad" which is normally set 3 ft. – 6 in. below the finished grade unless there are other geotechnical or geometric limitations. Using these wall heights, the reinforced mass should be assumed to be 0.7 of the height for feasibility and economic analyses. The engineer responsible for the TSL, assisted by the recommendations contained in the SGR, is responsible verifying external stability and foundation soil adequacy. The reinforced mass is

considered rigid and shall resist overturning, sliding, and bearing pressure, as well as satisfy settlement and global stability considerations similar to those for spread footings. See Section 3.10 for more information on the design of spread footing foundations. These walls have substantial weight and some settlement is almost certain to occur (some during construction and some after). Although MSE walls are well suited to handle settlements due to panel articulation and have the ability to adjust while maintaining stability because of the semi-rigid reinforced mass, the engineer responsible for the TSL, using the SGR, should assess the magnitude, horizontal limits, and time of settlement as well as the effects of settlement on the wall and any infrastructure placed on top of the reinforced volume. When settlement or bearing capacity of the foundation soils is not adequate, ground modification should be evaluated prior to using other wall types. Removal and replacement of unsuitable soils, use of lightweight fill, wick drains, aggregate columns ground improvement, or longer soil reinforcement (wider that 0.7xH), etc. should be considered.

When abutments are placed on MSE walls, piles are most commonly used although spread footings and drilled shafts have also been employed. Spread footings are more cost effective and avoid the approach slab “bump”. However, foundation bearing soils below the wall should have superior capacity to carry both the bridge and wall loadings. When piles are selected, pile corrosion and negative skin friction should be considered. Most pile supported abutments also require soil reinforcement to be attached to the abutment backwall since battered piles should not be used to resist lateral loadings. Settlement of walls with abutments becomes a more critical concern since excessive long term settlement with a spread footing abutment can cause distress in a bridge structure. Piles may develop negative skin friction, but not settle, causing an approach slab bump.

2.3.12.2 Cast-In-Place T-Type Walls

Cast-in-place T-type walls comprise the large majority of wall inventory currently in service in Illinois. For wall comparison purposes, cast-in-place T-Type walls are considered to have a design life of 75 years. It is often deemed a feasible wall type since it can be structurally designed to perform with limited geotechnical input for a wide variety of conditions. However, this wall type is often inappropriately selected on “fast track” projects or based on inadequate geotechnical or cost data only to be value engineered during construction.

T-type walls commonly require a smaller excavated width than MSE walls. The heal of T-type walls typically extends 25% to 30% of the wall height behind the face while MSE walls require an excavation width of at least 70%. This produces cost savings and can help avoid temporary sheeting for construction of T-type walls. Traffic barriers, parapets, noise walls, and other structures can easily be attached to the stems of T-type walls. Their configuration also allows for easy utility installation and future utility excavation behind the wall stem. In some locations, the cost of footing de-watering, cofferdams, seal coats, as well as ground modification, piles, or drilled shafts should be taken into account.

Feasibility evaluations consist of evaluating the adequacy in bearing of spread footings, settlement considerations, etc., or whether piles or a drilled shaft foundation should be specified. The lateral earth pressures to be used in design and feasibility analyses should consider backslope angle, height, and retained soil properties. The SGR and/or geotechnical engineer should be consulted to develop appropriate design values. Regardless of foundation type selected, CIP T-type walls normally have their footings located at least 4 ft. below finished grade.

2.3.12.3 Soldier Pile Walls

Soldier pile walls are most suited for “cut” situations, particularly when continuous undisturbed lateral support is required to be maintained adjacent to existing ground and infrastructure. Soldier pile walls can also be used to retain new fill at locations with moderate retained heights, adequate foundation soils, or tolerance for deflection. However, since other feasible wall types often provide a longer design life with less concern for wall deflection (resulting from fill compaction and passive pressure mobilization), soldier pile walls see more limited use in fill applications.

Various wall facing treatments can be used depending on aesthetics and costs. Locations that are rural or rustic in nature, or are hidden from public view can utilize an exposed treated timber lagging which provides the least expensive facing. An exposed lagging wall typically includes a CIP concrete cap to cover the top of the soldier piles and lagging. More commonly, though, concerns for similarity in wall aesthetics, and maintenance of exposed timber and solder piles dictates that a CIP concrete facing be used. The use of a CIP concrete facing allows some variation in rear face alignment to hide out-of-alignment soldier piles, pile deflections and lagging deflection. Precast lagging and precast panels have been used, but the casting, shipping, handling and installation expense can be excessive for most locations in the State. In most cases,

the wall facing is specified on the TSL to be extended 2 ft. below the finished grade at the wall face.

Soldier piles can be driven to the required tip elevation or placed in drilled holes and encased in concrete. Driving piles is normally less expensive but the designs are limited to H-pile and small W-sections. Drilled soldier piles can utilize larger W-sections, built up plate sections or multiple W-sections to accommodate tie back connections. The larger lateral bearing area of drilled soldier piles generally allows a wider spacing or shorter embedment. Drilled piles also provide added corrosion protection and, where exposed treated timber lagging or precast panels are used, alignment can be more carefully controlled than driven piles. Where vibration, noise, or driving feasibility (close bedrock, cobbles/till, overhead clearance interference, etc.) are concerns, drilled soldier piles should be specified.

When evaluating feasibility, the spacing of soldier piles should typically be assumed to be from 6 to 8 ft., although spacings up to 14 ft. have been used in portions of walls with shorter retained heights. For special applications, where bending or deflection requirements are severe, soldier piles can be drilled nearly tangent (adjacent) to each other to address these issues. When the wall height and loadings are not uniform along the length of the wall, the pile spacing or pile section size or both can vary along the length of the wall to produce consistent deflections and maximum design economy.

Soldier pile walls are not considered as durable as MSE walls. They can be estimated to have a 50 yr. design life. The TSL shall specify items such as facing type, soldier pile type (driven or drilled), estimated top of rock, and the tip elevation/spacing anticipated from the preliminary feasibility analyses, noting that the final spacing and tip elevation to be determined in design.

2.3.12.4 Permanent Sheet Piling

Permanent sheet piling is best suited for sites where the soil has little or no cohesive binder (predominantly granular conditions) and is unlikely to temporarily arch for lagging placement. Permanent sheet piling is also commonly used in conditions where the excavation is to go below the water table and/or where water retention is required. In sandy conditions, maintaining a drilled excavation can be difficult and expensive, and may require casing, over-sizing the holes, and tremie concrete placement methods. As such, sheet piling should be considered.

Depending on the required aesthetics of the location, a cast-in-place concrete facing can be added or the sheeting can be left exposed and capped with a steel channel section, making it a cost-effective alternative to other wall types.

2.3.12.5 Anchors

Some locations where a soldier pile or sheet pile wall is selected may require wall anchors to satisfy deflection or strength issues. In these cases, the TSL plans should indicate the anchor type determined to be most cost effective and feasible given ROW and geotechnical design constraints. Deadman anchors are normally the least expensive but usually offer a lower capacity than other anchor types. Helical anchors can be installed with less disturbance than deadmen, but are limited to use in locations where the soil strength will not prevent installation. Permanent ground anchors provide the highest confidence and capacity but are more expensive.

2.3.13 Type Size and Location Presentation

The checklists below are provided as an aid to the planner when completing a TSL plan. They may not be all-inclusive for any particular project.

See also Section 2.3.14 for example TSL plans which are available online.

2.3.13.1 Checklist for Bridges

General

1. Review Bridge Condition Report, Structure Report, Structure Geotechnical Report, and Hydraulic Report to see that the TSL plan agrees with the listed reports and that the structure fits the site conditions.
2. Consultants should provide company name on TSL plan.

Title Block

1. Label the page as “General Plan”
2. List the following data:
    a. Roadway name/marked route over feature.

b. If the structure is over a waterway listed as a navigable public body of water, provide the term "Public Water".
c. Designated funding route and section number.
d. County.
e. Station at the center of the bridge of main route or intersecting survey lines.
f. Structure number. (New structure numbers are issued for bridges that do not reuse any part of the existing structure.)

Location Sketch

1. Provide a sketch that shows four sections of the township.
2. Label the range, township and principle meridian.
3. Provide a north arrow.
4. Call out the bridge location.
5. Recheck names of major features on sketch.

Highway Classification

1. List the following data for each route over and under a structure:
   a. Designated funding route and roadway name/marked route.
   b. Functional Class from the Illinois Structure Information System.
   c. ADT – Present and Future.
   d. DHV – Future.
   e. ADTT % (including single and multiple unit trucks).
   f. Design speed.
   g. Posted speed.

Loading (truck)

1. Provide the correct truck loading based on the design specification, LRFD or LFD.
2. Include the Alternate Military Loading for structures on interstates that are designed using LFD.
3. Show an allowance for Future Wearing Surface (FWS).
4. On rehabilitation projects, verify the structure can support the proposed future wearing surface and meet the required rating.

Design Specifications

1. Provide the applicable bridge design specifications.
2. Include any additional applicable specifications (e.g. seismic, curved girders, etc.)

Design Stresses

1. Provide the design stresses for Field, Precast, and Precast Prestressed units as required. A design stress of 5,000 psi shall be specified for all concrete which incorporates an anchorage of a Type SM railing.
2. Provide a separate table for design stresses of existing elements that will be incorporated into new construction.
3. Verify the correct design stresses are shown for the proposed design method.

Seismic Data

1. Provide the applicable seismic data based for the applicable design specification.

Upper Left Hand Corner Data

1. Provide a benchmark that matches the structure report and survey data.
2. Provide the existing structure number with the construction year and project name.
3. Provide a brief description of the existing superstructure and substructure that includes the length and width of existing structure.
4. Indicate the proposed method of traffic control for the proposed bridge construction.
5. Indicate if any items of the existing bridge construction will be salvaged for future IDOT use.

Waterway Information Table

1. Verify the numbers match the approved hydraulic waterway information table.
2. Verify the design high water elevation matches the elevation shown in the elevation view.

Design Scour Elevation Table

1. For stream and river crossings, provide a Q_{100} and Q_{500} design scour elevation for each substructure unit.

Offset Sketch

1. Provide an offset sketch for curved roadways. See Section 2.3.14 for an example.

Profile Grade

1. Provide a profile grade that extends beyond the bridge approach slabs.
2. Show grade slopes, curve length, elevation and stations of PVC, PVT, & PVI.
3. Verify the profile grade matches the plan and profile sheet.
4. Indicate the roadway and location of the profile grade line.
5. Check for negative fillets on rehabilitation projects.

Horizontal Curve Data

1. Provide horizontal curve data including the PI station, Δ, D, R, L, T, E, PC station, PT station, and SE.
2. Indicate superelevation and/or normal crown transition stations if transition occurs between approach slabs.

Lighting Details

1. Provide pole height, diameter (required bolt circle), spacing and location.

Cross Section

1. Verify the bridge width is correct for the roadway classification and consistent with the approved BCR, if applicable.
2. Indicate the roadway centerline and profile grade location
3. Provide out-to-out, roadway, shoulder, sidewalk and parapet dimensions.
4. Provide deck cross slopes and check the crown location.

5. Provide slab thickness. For cast-in-place concrete slab bridges, provide thickness and indicate “subject to refinement during the design phase”.
6. Show beam depth. For a plate girder, indicate web depth only.
7. Provide the composite note, if applicable.
8. Verify the fillet is shown correctly.
9. Provide the rail type and vertical dimension.
10. Provide median and sidewalk dimensions, if applicable.
11. Show a longitudinal open joint if required.
12. Locate the stage construction line and stage removal line.
13. For each stage sequence, indicate the location of traffic lanes, limits of removal, limits of construction, and location of temporary barrier.
14. Show local tangent, offset, radial and varying dimensions for curved roadway with straight beams. See Section 2.3.14 for an example.
15. Provide clearance diagram for Railroad Bridges.
16. Verify the clearance between the stage removal line and the stage construction line can accommodate temporary sheet piling, if required.
17. Verify the depth of dead load deflection at the stage construction line is acceptable. If not, provide closure pour.
18. Evaluate the condition of the existing superstructure in order to determine proper lane usage for Stage I traffic.
19. Label the deck drains and scuppers and verify bridge drainage is provided, as necessary.
20. Indicate a closed drainage system, if necessary.
21. Provide an outline of the cross section of the existing structure without dimensions.
22. Locate any utilities below the superstructure or conduits in the concrete parapets.
23. Show beam spacing.

Abutment Section

1. Verify integral and semi-integral abutments meet limitation requirements.
2. Show bridge omission.
3. Specify the type of expansion joint and verify it fits the bridge geometry.
4. Show the approach slab.
5. Show the back of abutment location.
6. Show the clearance to berm/end of slopewall.
7. Provide the dimension from the back of the abutment to the centerline of bearing with the

exception of integral abutments.

8. Show the bearing type.
9. Dimension the approach slab seat width and backwall thickness.
10. Provide appropriate backfill and drainage details for selected abutment type.
11. For skewed bridges, indicate horizontal dimensions are at right angles.

Slope Details

1. Show appropriate slope treatment.
2. Provide a detailed section through the slopewall (or riprap) and corresponding ditch/anchor detail.
3. Provide a slopewall flank detail and indicate the slopewall extension distance beyond the out-to-out of bridge width, if applicable.
4. Verify the riprap size is consistent with the stream velocity, if applicable.
5. Provide stone riprap flank details, if applicable.

Pier Sketch

1. Verify proper pier type configuration.
2. Show the actual number of columns for multi-column piers.
3. Verify the correct crashwall heights for bridges over railroads.
4. Provide dimension from ground line to top of crash wall.
5. Show ground elevations.
6. Provide foundation type and related elevations/details.
7. Provide section thru pier with an expansion joint, if applicable
8. Label expansion joint type, bearing types and dimensions from centerline of pier to centerline of bearings, if applicable.
9. Show open joints in caps and construction joints in base wall according to policy.

Elevation View

1. Show bridge omission stations.
2. Show fixity and expansion conditions at all substructure elements.
3. Show vertical and horizontal clearances.
4. Vertical clearance for a bridge over a railroad should be shown in accordance with AREMA

clearance diagrams.

5. Show approach traffic barrier terminal types.
6. Show bottom of footing, abutment, or encasement wall elevations.
7. Show foundation type and required elevations.
8. Show beam type.
9. Show slope treatment and indicate rise and run.
10. Show pipe culverts through embankment if required at grade separations.
11. Plot the existing ground line (if different than proposed).
12. Show construction embankment and backfill note when applicable.
13. Show ground elevations at piers.
14. Show streambed elevation.
15. Show design highwater elevation and EWSE.
16. Show location of light poles, if required.
17. Show navigation obstruction lighting, architectural lighting or other electrical systems, as required.
18. Show cross slopes for the roadway and shoulders below the bridge.
19. For structures over railroads, add a note indicating “No freefall deck drains will be permitted in the span over the tracks or within 10 ft. of cross arms of a railroad pole line”.

Plan View

1. Show span lengths, distances from back of abutment to centerline of bearing, and back-to-back of abutment length.
2. Ensure the above dimensions match the stationing distances.
3. Show the skew angle at a substructure unit.
4. Show approach roadway template, i.e. lane and shoulder widths, curb and gutter type, etc.
5. Show the bridge widths and out-to-out dimensions.
6. Show stations and elevations along profile grade at substructure units.
7. Show station equation for intersecting reference lines on roadways.
8. Show stations and offsets to roadway’s tapers that are under or across structure.
9. Ensure bridges are shown with stationing increasing to the right.
10. Show stationing/flow direction under roadway
11. Show lane and shoulder dimensions under roadway.
12. Show channel width at right angles to stream.

13. Locate point of minimum vertical clearance on the bridge. For railroad bridges, the minimum vertical clearance should be shown in accordance with the AREMA clearance diagram on the bridge.
14. Indicate and check horizontal clearances.
15. Show stage construction line.
16. Show temporary construction requirements (sheet piling, geotextile wall, etc.) when applicable.
17. Plot the boring locations.
18. Show proper picture of slopewall configuration.
19. Show slopewall slope at right angles to stream.
20. Show pipe culverts and local drainage near structure.
21. Show bridge approach slab.
22. Show guardrail.
23. Show expansion joint accurately at bridge ends.
24. Show railroad mile post information.
25. Verify handicap ramps are shown on sidewalks at intersections.
26. Show north arrow.
27. Provide light pole foundation locations, if required.
28. Show limits of existing structure.
29. Show floor drain/scupper spacing and type.
30. Show bridge approach shoulder drains when applicable.

2.3.13.2 Checklist for Culverts and Three Sided Structures

General

1. Check correspondence file, Bridge Condition Report, Structure Report, Structure Geotechnical Report, and Hydraulic Report to see that the TSL plan agrees with the listed reports and that the structure fits the site conditions.

Title Block

1. Label the page as “General Plan”
2. List the following data:
    a. Roadway name/marked route over feature.

b. Designated funding route and section number.
c. County.
d. Station at the center of the structure.
e. Structure number. (New structure numbers are issued for bridges that do not reuse any part of the existing structure.)

Location Sketch

1. Provide a sketch that shows four sections of the township.
2. Label the range, township and principle meridian.
3. Provide a north arrow.
4. Call out the structure location.
5. Recheck names of major features on sketch.

Highway Classification

1. List the following data:
   a. Designated funding route and roadway name/marked route.
   b. Functional Class from the Illinois Structure Information System.
   c. ADT – Present and Future.
   d. DHV – Future.
   e. ADTT % (including single and multiple unit trucks).
   f. Design speed.
   g. Posted speed.

Loading (truck)

1. Provide the correct truck loading based on the design specification.
2. Include the Alternate Military Loading for structures on interstates that are designed using LFD.
3. Show an allowance for Future Wearing Surface (FWS).
4. On rehabilitation projects, verify the structure can support the proposed future wearing surface and meet the required rating.

Design Specifications

1. Provide the applicable bridge design specifications.

Design Stresses

1. Provide the design stresses for Field and Precast units.
2. Provide a separate table for design stresses of existing elements that will be incorporated into new construction.
3. Verify the correct design stresses are shown for the proposed design method.

Seismic Data

1. Provide the applicable seismic data based on the applicable design specification (three-sided structures only).

Upper Left Hand Corner Data

1. Provide a benchmark that matches the structure report and survey data.
2. Provide the existing structure number with the construction year and project name.
3. Provide a brief description of the existing structure.
4. Indicate the proposed method of traffic control for the proposed structure construction.
5. Indicate if any items of the existing bridge construction will be salvaged for future IDOT use.
6. Add a note stating “Precast alternate is not allowed” if site conditions require a cast-in-place culvert.

Waterway Information Table

1. Verify the numbers match the approved hydraulic waterway information table.
2. Verify the design high water elevation matches the elevation shown in the elevation view.

Profile Grade

1. Provide a profile grade that extends beyond the limits of the structure.

2. Show grade slopes, curve length, elevation and stations of PVC, PVT, & PVI.
3. Verify the profile grade matches the plan and profile sheet.
4. Indicate the roadway and location of the profile grade line.

Horizontal Curve Data

1. Provide horizontal curve data including the PI station, Δ, D, R, L, T, E, PC station, PT station, and SE.
2. Indicate superelevation and/or normal crown transition stations if the structure is located within a transition.

Section Through Barrel of Structure

1. Show size of barrel opening.
2. Show thickness of walls.
3. Show thickness of top slab.
4. Show bottom culvert slab 1 in. thicker than top slab.
5. Indicate culvert top and bottom slab thickness is subject to refinement during final design.
6. If there is no fill on the CIP culvert, provide corbels.
7. Show construction joints 6 in. above the top of bottom slab for CIP culverts.
8. Show construction joints between walls and top slab for CIP culverts.
9. Indicate Phoebe nesting sites at downstream end of interior walls on CIP culverts.
10. For three sided structures, indicate slab and wall thickness and shape may vary as per manufacturer.
11. The top and bottom slabs of multiple cell box culvert extensions should be designed as continuous members according to present design policies.

Longitudinal Section

1. Show lane, shoulder, median, barrier, and sidewalk widths.
2. Show roadway cross slopes.
3. Show profile grade location.
4. Show guardrail (if required)
    a. Verify guardrail placement behind curb (BD&E Manual Fig. 38-6J)
    b. Verify slope “hinge point” is 3 ft. – 10 in. min. from face of guardrail (See Hwy. Std.

630001).

5. Show height of barriers and pedestrian rails.
6. Show upstream and downstream flow-line and invert elevations. (Set invert 3 in. below flow-line.)
7. Show design high-water elevation (at upstream end of culvert) and EWSE.
8. Show height and width of headwall.
9. Show stage traffic widths.
10. Show stage construction widths.
11. Verify stage construction is consistent with condition of existing bridge (and the District's desire).
12. Show temporary concrete barrier.
13. Show top and bottom slab thickness.
14. Verify the need for an edge beam on the top slab (of cast-in-place culverts) at the stage construction joint. (Note, an edge beam is typically not required if stage traffic is located further than half of the design live load distribution width from the stage construction joint.)
15. Show cutoff walls depth.
16. Show buried utilities
17. Plot natural ground line.
18. Show foundation type.

Plan View

1. Show dimension from out-to-out of headwalls (i.e. length along walls).
2. Show controlling culvert dimensions perpendicular to barrels.
3. Show approach roadway template.
4. Give skew angle.
5. Show width of headwall.
6. Show typical value of side-slopes in vicinity of culvert wings.
7. Show station and elevation on profile grade at CL of culvert.
8. Show culverts with stationing increasing to the top (typically, 3-sided precast structures are laid out like culverts).
9. Show flow direction under roadway.
10. Show CL of culvert.
11. Indicate and check important horizontal clearances.
12. Show stage construction line and locate on roadway.

13. Show temporary construction details (sheet piling, geotextile wall, etc.) when applicable.
14. Show limits of existing structure.
15. Plot boring locations.
16. Show pipe culverts and local drainage near structure.
17. Show bridge approach slab if there is no fill on the culvert.
18. Show guardrail.
19. Show type of curb and gutter.
20. Show north arrow.

Design Scour Elevation Table

1. For stream and river crossings, provide a design scour elevation for the upstream and downstream ends.

Stream Protection Details

1. Verify the need for stream protection (i.e. riprap, aprons, etc.) and show stream protection details as required.

2.3.13.3 Checklist for Retaining Walls

General

1. Check correspondence file, Structure Report, and Structure Geotechnical Report to see that the TSL plan agrees with the listed reports and that the structure fits the site conditions.

Title Block

1. Label the page as “General Plan”
2. List the following data:
    a. Roadway name/marked route.
    b. Designated funding route and section number.
    c. County.
    d. Beginning and ending stations of the wall.

e. Structure number. (New structure numbers are issued for walls that do not reuse any part of the existing structure.)

Location Sketch

1. Provide a sketch that shows four sections of the township.
2. Label the range, township and principle meridian.
3. Provide a north arrow.
4. Call out the structure location.
5. Recheck names of major features on sketch.

Highway Classification

1. List the following data:
    a. Designated funding route and roadway name/marked route.
    b. Functional Class from the Illinois Structure Information System.
    c. ADT – Present and Future.
    d. DHV – Future.
    e. ADTT % (including single and multiple unit trucks).
    f. Design speed.
    g. Posted speed.

Loading

1. Provide a noise wall loading, if applicable.

Design Specifications

1. Provide the applicable design specifications.

Design Stresses

1. Provide the design stresses for Field and Precast units.
2. Provide a separate table for design stresses of existing elements that will be incorporated into new construction.

3. Verify the correct design stresses are shown for the proposed design method.

Upper Left Hand Corner Data

1. Provide a benchmark that matches the structure report and survey data.
2. Provide the existing structure number with the construction year and project name.
3. Provide a brief description of the existing structure.
4. Indicate the proposed method of traffic control for the proposed construction.
5. Indicate if any items of the existing construction will be salvaged for future IDOT use.

Profile Grade

1. Provide a profile grade that extends beyond the limits of the structure.
2. Show grade slopes, curve length, elevation and stations of PVC, PVT, & PVI.
3. Verify the profile grade matches the plan and profile sheet.
4. Indicate the roadway and location of the profile grade line.

Horizontal Curve Data

1. Provide horizontal curve data including the PI station, Δ, D, R, L, T, E, PC station, PT station and SE.
2. Indicate superelevation and/or normal crown transition stations if the structure is located within a transition.

Elevation View

1. Show the view looking at the front (exposed) face of the wall.
2. Show the total length of the wall.
3. Provide stations and elevations at the beginning of wall, end of wall and intermediate control points along the top of the wall. (Intermediate control points include points of curvature, kink points, slope break points, expansion joints, wall type transition stations, etc.)
4. Plot the existing and proposed ground line along the front face of the wall.
5. Provide invert elevations and sizes for drainage structures.
6. Indicate the following features for MSE walls:

   a. Top of exposed panel line.
   b. Theoretical top of leveling pad.
   c. Top of coping or traffic barrier.
   d. Generic panel lines if panels are precast.
   e. Ground improvements if applicable.
7. Indicate the following features for cast-in-place (T-type) walls:
   a. Bottom of footing elevations.
   b. Foundation type.
   c. Construction and expansion joint locations.
8. Indicate the following features for soldier pile and permanent sheet pile walls:
   a. Bottom of concrete facing, if applicable.
   b. Transition station between cantilevered and anchored wall, if applicable.
   c. Construction and expansion joints, if applicable.
   d. Driven or drilled soldier pile or sheeting foundation type.
9. Show rustification limits, if applicable.

Plan View

1. Show a plan layout of the wall that includes the surrounding roadways, utilities, buildings, etc.
2. Provide stations and offsets at the beginning of wall, end of wall, and all intermediate control points.
3. Specify location offsets are referenced to (i.e. front face of wall).
4. Show stationing/flow direction of adjacent roadway/stream.
5. Label and dimension adjacent roadway and topography features.
6. Show ground slopes.
7. Show and label any traffic barriers.
8. Show proposed wall element's approximate layout limits (including footings, soil reinforcement, ground anchors, soil nails, deadmen, etc.).
9. Show temporary construction requirements (sheet piling, soil retention system, etc.), if required for construction.
10. Show R.O.W limits.
11. Plot the boring locations.
12. Show north arrow.
13. Show limits of existing wall, if applicable.

Section Through Wall

1. Provide a typical wall section for each wall type used.
2. Show existing ground line.
3. Show proposed ground lines on the front and back side of the wall.
4. Show existing and proposed utilities.
5. Show R.O.W limits, if a constraint.
6. Show any adjacent surface drainage ditch or gutter.
7. Show maximum exposed wall height.
8. Major elements of wall system should be shown and labeled.
9. Show temporary construction details (sheet piling, soil retention system, etc.), if required.
10. Label and detail any protection (parapet, fence, etc.) at the top of the wall.
11. Show adjacent roadways with centerline location, PG location, cross slopes, etc.
12. Show the point on the proposed wall that offsets are referenced to (i.e. F.F. of wall).
13. Show existing wall, if applicable.
14. Show aesthetic facing treatment, if applicable.
15. Indicate the following feature for MSE walls:
    a. Show soil reinforcement.
    b. Show select backfill.
    c. Show top of leveling pad 3 ft. – 6 in. min. below finished ground line.
    d. Show limits of reinforced soil mass.
    e. Show “top of exposed panel line”.
    f. Show precast panels or cast-in-place facing.
    g. If cast-in-place facing is utilized, show applicable wall drainage details.
16. Indicate the following features for cast-in-place (T-type) walls:
    a. Show footing 4 ft. min. below finished grade.
    b. Show stem thickness subject to refinement during final design.
    c. Indicate backfill material.
    d. Show applicable wall drainage details.
    e. Show footing width subject to refinement during final design.
17. Indicate the following features for Soldier Pile and Permanent Sheet Pile walls:
    a. If both anchored and cantilevered walls are utilized, provide a typical section for both wall types.
    b. Show concrete facing 2 ft. typical below finished ground line , if applicable.

c. Show facing thickness, if applicable.
d. Show timber lagging, if applicable.
e. Show soldier pile encasement concrete, if applicable (drilled soldier piles).
f. Show "controlled low strength material", if applicable (drilled soldier piles in cut situations).
g. Show applicable wall drainage details.
h. Show anchor types, if applicable.

Special Considerations

1. Provide any unique construction sequence notes or staging details.
2. Identify and locate all design and construction constraints such as overhead power lines and existing structures.

2.3.14 Sample Type Size and Location Plans

Sample TSL plans which indicate a range of grade separation and stream crossing structures, as well as retaining walls have been developed to provide planners with a quick reference for bridge planning policy and presentation methods. These TSL's are available online and can be accessed with the links provided below.

The following chart provides a quick reference for specific structure types that have been developed as sample TSL plans.

TSL Index Link

Primary BBS Documents Web Page

TSL Ex. #	Type and Description
TSL Ex. 1	Straight Interstate over Interstate - Dual Two Span Structure - Superstructure Type: Steel Plate Girder - Abutment Type: Integral - Pier Type: Multi-Column Grade Separation, Footing Supported
TSL Ex. 2	Straight Highway over River - Three Span Structure - Superstructure Type: Steel Plate Girder

- Abutment Type: Integral
- Pier Type: Column-Web Wall Drilled Shaft Bent

TSL Ex. 3 Straight Structure on Curved Highway over Creek

- One Span Structure
- Superstructure Type: Steel Wide flange
- Abutment Type: Integral

TSL Ex. 4 Curved Structure on Curved Roadway over Highway

- Three Span Structure
- Superstructure Type: Steel Wide flange
- Abutment Type: Stub
- Pier Type: Single Hammerhead Grade Separation, Footing Supported

TSL Ex. 5 Straight Highway over Highway

- Dual One Span Structure
- Superstructure Type: Steel Plate Girder
- Abutment Type: Vaulted (Filled)

TSL Ex. 6 Flared Structure at Highway Intersection over Creek

- Three Span Structure
- Sidewalk
- Superstructure Type: Steel Wide flange
- Abutment Type: Stub
- Pier Type: Solid Wall Pile Bent

TSL Ex. 7 Straight Highway over Railroad

- Three Span Structure
- Sidewalk
- Superstructure Type: Steel Wide Flange
- Abutment Type: Integral
- Pier Type: Multi-Column Railroad Pier, Footing Supported

TSL Ex. 8 Straight Highway over Railroad

- Three Span Structure
- Superstructure Type: P.P.C. I-Beam
- Abutment Type: Stub
- Pier Type: Multi-Column Railroad Pier, Footing Supported

TSL Ex. 9 Straight Highway over Creek

- Three Span Structure
- Superstructure Type: P.P.C. I-Beam

- Abutment Type: Integral
- Pier Type: Solid Wall Pile Bent

TSL Ex. 10 Straight Highway over Creek

- Three Span Structure
- Superstructure Type: P.P.C. I-Beam
- Abutment Type: Integral
- Pier Type: Solid Wall Pile Bent

TSL Ex. 11 Straight Highway over Creek

- Three Span Structure
- Superstructure Type: Concrete Slab
- Abutment Type: Integral
- Pier Type: Solid Wall Pile Bent

TSL Ex. 12 Straight Highway over Highway

- Four Span Structure
- Superstructure and Abutment Replacement
- Superstructure Type: Steel Wide Flange
- Abutment Type: Integral

TSL Ex. 13 Straight Highway over Creek

- Three Span Structure
- Deck Replacement and Abutment Conversion
- Abutment Type: Semi-Integral

TSL Ex. 14 Straight Highway over Creek

- Two Barrel Box Culvert (Embankment Fill on Top Slab)

TSL Ex. 15 Straight Highway over Creek

- Three Barrel Box Culvert (No Embankment Fill on Top Slab)

TSL Ex. 16 Straight Highway over Creek

- Two Cell Three Sided Pre-Cast Structure (Embankment Fill on Top Slab)

TSL Ex. 17 Retaining Wall along Highway

- Drilled Soldier Pile Retaining Wall

TSL Ex. 18 Retaining Wall along Highway

- Mechanically Stabilized Earth (MSE) Retaining Wall

2.3.15 Deliverables

The process of completing and delivering the final complete TSL plan and "agreement" works somewhat differently for a BBS prepared project as opposed to when a District hires a consultant. There are also variations within the processes depending on the type of structure involved (for example there are differences between highway and railway bridges). The delivery process for each main scenario (i.e. BBS or consultant) is given in the following two sections.

2.3.15.1 BBS Prepared TSL Plans

The TSL plan is the means of obtaining agreement from all interested parties on the general bridge configuration prior to the development of the Final plans. To obtain this agreement, the plan should normally be processed as follows:

a. District submits Structure Report and corresponding attachments to BBS in order to initiate TSL plan and SGR preparation.

b. After completion by the Bridge Planning Section, the TSL will be transmitted to the Regional Engineer for review and approval. The plan shall be reviewed for agreement with the Project Report, the development of the Roadway plans and other project requirements. The Regional Engineer's approval assures that agreement. An approved copy, marked with revisions as necessary, shall be returned to the Bridge Planning Section.

c. When levees or Federal civil work projects are affected, the District shall obtain the Corps of Engineers and/or Levee Authority's approval of the plan and so notify the Bridge Planning Section.

d. For railroad grade separations a copy from the BBS will be sent to the Bureau of Design and Environment which will forward it to the railroad company for review and approval.

e. TSL plans for interstate bridge projects which are deck replacement, superstructure replacement, widening or complete replacement, and are non-routine in nature or are over 300 ft. in length, shall be submitted to the Federal Highway Administration for review and approval.

f. Concurrently with the TSL plan processing, the Bridge Planning Section will obtain construction permits, when required, from the Department of Natural Resources and the U.S. Coast Guard.

g. After approval by the Regional Engineer and other parties with interest, and after all required revisions are made, the Engineer of Bridges and Structures will approve the TSL plan as the basis for the preparation of Final plans and direct that preparation.

2.3.15.2 Consultant Prepared TSL Plans

The Regional Engineer is responsible to direct and supervise work performed by consultants. TSL plans developed by consultants are normally processed as follows:

a. The Consultant provides the completed TSL plan to the District where it is reviewed for agreement with the Project Report and other project requirements.

b. At the District's discretion, the TSL plan along with the Structure Report, SGR and corresponding attachments can be transmitted by the Consultant concurrently with the above submittal or separately by the District to the BBS. The Bridge Planning Section may make corrections or request revisions and re-submittal.

c. After Bridge Planning Section review, TSL plans for railroad grade separations will be transmitted by the Bureau of Design and Environment to the railroad company for approval.

d. The Engineer of Bridges and Structures will, after Railroad approval (if required), approve the TSL plan as the basis for the preparation of the Final Contract plans and transmit the plan so marked to the District. The Regional Engineer may then direct the Consultant to proceed with the final design.

e. When submittal of TSL plans to the Federal Highway Administration is required, the Regional Engineer may wish to delay directing the Consultant to proceed with the Final plans until FHWA approval has been obtained - depending on the degree of complexity or controversy involved in the proposed design.

TSL plans prepared by railroad companies or their consultants for railroad structures overpassing highways shall be processed as above except for Item c.

In instances where TSL plans are to be prepared by the State for consultant final design, the plans will be processed according to Section 2.3.15.1.

As with State design, the Bridge Planning Section will apply for construction permits from the Department of Natural Resources or the U.S. Coast Guard; however, the permit drawings should generally be provided by the Consultant.

2.4 Structure Reconstruction/Rehabilitation

When the scope-of-work for a structure is rehabilitation/reconstruction as opposed to bridge replacement, there are some special considerations during the planning process not fully covered in previous sections of this chapter.

2.4.1 Definition and Submittal Requirements

Bridge rehabilitation such as redecking and bridge widenings, and bridge reconstruction defined as superstructure replacement require TSL plans, but no SGR is required.

2.4.2 Evaluation Process

The following sections give some general guidelines on special evaluation processes for rehabilitation and reconstruction projects during TSL plan development.

2.4.2.1 Abutment Widening

Abutment caps and/or walls are typically widened by either extension in-kind or by providing a cap cantilevered from the existing abutment. The use of a cantilevered cap is normally a function of the structural capacity of the existing abutment, imbalance of the deck system during construction staging or the structural limitations of the cantilever itself. Since the cantilever method of extension is normally more economical than extension in kind, a cantilever should be used whenever it is both structurally and economically feasible.

The extension of the abutment cap beyond the existing embankment width by cantilever on a closed abutment leaves the wingwalls inadequate and creates a void between the existing and proposed shoulders adjacent to the abutment cap. An approach shoulder beam treatment was developed to retain the widened embankment. The approach shoulder beam, typically a precast channel section, rests on the modified abutment at one end and a pedestal at the other, and, for additional stability, the approach beam is normally tied into the adjacent slab. The beam length is determined by computing the distance necessary to provide a 2:1 slope from the end of the existing wingwall to the shoulder edge at the end of approach beam. The minimum beam length to be used should be 19 ft. – 11 in. and when additional length is required it should be increased in increments of 4 ft. – 0 in.

2.4.2.2 Pier Widening

The widening of solid piers is typically accomplished by one of three methods. The first method utilizes cantilever construction and is accomplished by rebuilding the pier cap to the required width by extending cantilever arms out past the pier shaft. This method is limited by the capacity of the pier to accept the additional dead load and by the length of the cantilever arm.

The second method utilizes open or encased pile bent construction to extend the pier to the necessary width. This method is limited by the capacity of the pile bent construction.

The third method for pier extension is an extension of the pier with the same type of construction as used on the original pier. This method is the most costly of the three options and is generally used when the other options prove unacceptable for either structural or physical reasons.

Other pier types, such as drilled shaft or open column bents, are typically widened with in-kind construction. Crash walls and footings shall be connected to the existing crash walls and footings in all cases. On framed piers with cantilevered caps, the pier caps shall not be attached and shall be designed accordingly. All other pier types shall have a full connection at the cap. The normal distribution of dead and live loads to the beams or girders of both the existing and widened portions may be assumed when following these criteria.

The intended design approach consistent with the planning review shall be stated on the TSL plan.

2.4.2.3 Semi-Integral Abutments

A semi-integral jointless abutment may be appropriate for rehabilitation and reconstruction projects which incorporate an abutment not originally designed to be integral. The rehabilitated abutment may continue to use expansion bearings, but the beams can be integral with the backwall, eliminating the deck's expansion joint at the abutment. The bridge expansion is provided for as in a typical integral abutment at the ends of the approach slab away from the bridge. Alternate pile supported abutments, as illustrated in Figure 3.8.5-3, or existing abutments that have a history of inward rotational problems should not be considered for this type of abutment. Existing abutments which have been built in a manner that have demonstrated stability with no known vulnerabilities, such as a standard open abutment or stub abutments on spread footings, may be considered for a semi-integral abutment application.

2.4.2.4 Retrofit of Existing Welded Cover Plates

Existing steel girder bridges having either positive moment or negative moment welded cover plates shall use the following retrofitting policy when evaluating the reuse of the existing steel girders for deck replacement projects.

1. All end of cover plate locations shall be retrofitted on bridges when:
    a. Known fatigue cracks have been found during bridge inspection or Bridge Condition Report preparation.
    b. Bridge is located on a route that is identified as carrying unusually heavy truck loads (i.e. quarry loads, landfills, etc.) or a significant number of permit loads. The designer should contact the District Bureau of Operations for guidance concerning these routes. An economic analysis should be completed comparing the cost of utilizing the existing steel girders with all associated girder repairs, retrofitting and painting considered, versus superstructure replacement to justify the decision to retrofit. For this analysis, approximately $5.00/lb. may be used for the estimated cost of “Structural Steel Repair”.

2. Consideration to retrofit all end of cover plate locations shall be given to all bridges located on a route that has an ADTT (Average Daily Truck Traffic) exceeding 1500 trucks. For bridges meeting this criterion, a fatigue evaluation shall be completed to calculate the

remaining mean fatigue life utilizing the 1990 AASHTO Guide Specifications for Fatigue Evaluation of Existing Steel Bridges with Interims (using the Fatigue Truck).

a. When the remaining mean fatigue life exceeds 50 years, retrofitting is not required.
b. When the remaining mean fatigue life of any one location is less than 50 years, the end of all cover plate locations on the bridge shall be retrofitted. Once again, an economic analysis should be completed comparing the cost of utilizing the existing steel girder, with all associated girder repairs, retrofitting and painting considered, versus superstructure replacement to justify the decision to retrofit.

3. Bridges not meeting criteria 1 or 2 do not require a fatigue evaluation or retrofitting.

On deck repair projects, retrofitting the cover plate ends is not required unless known fatigue cracks exist.

Once the decision to retrofit the end of the cover plates has been made, the design of the bolted plate thickness and number of bolts shall be based on providing 100% of the existing girder flange area. Details in Section 1.12.3 of the Bureau of Bridges and Structures' Structural Services Manual shall be used.

See Section 3.3.8 for further information on cover plate design.

2.4.2.5 Distortion-Induced Fatigue Details

Distortion-induced fatigue has initiated failures in some existing bridges. Rehabilitation projects should evaluate deficient details and potential associated fracturing, and retrofit or replace material to eliminate defects and mitigate highly susceptible conditions, such as cross-frame connection plates not positively attached to flanges. Detailing and design procedures to avoid distortion-induced fatigue in new structures are mandated in AASHTO LRFD 6.6.1. For existing tension flanges, bolted rather than welded connections may be required to satisfy fatigue stress range limits.

2.4.2.6 Re-Decking, Beam Widenings and New Superstructures on Existing Substructure Units

See Section 2.1.2 for the appropriate design specification to be used. For further guidance, analysis and requirements, see Section III of "Bridge Condition Report Procedures and Practices" available online.

2.4.3 TSL Plan Preparation and Sample TSL Plans

Some sample TSL plans for rehabilitation projects (TSL Ex. 12 and TSL Ex. 13) are included in the indexed list of online sample TSL's provided in Section 2.3.14.

2.5 Utility Attachments

The policy on the Accommodation of Utilities on Rights of Way of the Illinois State Highway System, 92 Illinois Administrative Code 530, governs the attachment to and assessment for utility installations to bridges and to traffic structures under the jurisdiction of the Division of Highways. A copy of the most recent publication of this policy can be obtained from the Central Bureau of Operations.

All utility companies, whether private, cooperative or municipally-owned, who wish to attach their facilities to bridges or to traffic structures under the jurisdiction of the Division of Highways are subject to assessment charges.

The administration and regulation of utility attachments are functions of the Bureau of Operations and of the Regional Engineer.

If the Regional Engineer approves of the proposed attachment to the structure, an application for a permit for utility attachment to a bridge or structure shall be submitted to the Central Bureau of Operations for review of compliance with policy and method of attachment. If approved by the Central Bureau of Operations, the permit will be forwarded to the Bridge Planning Section of the Bureau of Bridges and Structures for structural analysis and computation of assessment charges. Copies of the Computation of Cost Assessment will then be sent directly to the Regional Engineer with a copy of the letter of transmittal to the Bureau of Operations and, in the case of new structures, to the Bureau of Construction for further processing.

In instances where it is desirable to attach a utility to a proposed new structure undergoing design or reattach to a proposed bridge reconstruction, a permit and assessment should be processed

as above; however, the plans and details of the attachments should be transmitted to the Bureau of Bridges and Structures early in the design stage so that provision for the attachment may be incorporated into the Contract plans. Such provisions will generally be limited to:

1. Including the weight of the attachment in the design loads.
2. Providing concrete inserts for anchor bolts.
3. Providing openings or passageway thru or around structural elements where structurally practical.

2.5.1 Computation of Cost Assessment

A utility company whose facility is to be carried on a structure will be assessed an amount equal to the product of the ratio of the weight of facility to the live load for which the structure was designed and the cost of applicable structural items which contribute to the longitudinal carrying capacity of the structure. Assessment will be made for the full capacity of attachment; for example, if six telephone ducts are installed, assessment will be made for all six ducts, even though initially only two ducts might be utilized.

The weight of facility shall include all conduits, cables and pipes, completely filled, and all material necessary for attachment to structure.

The live load for which the structure is designed is either present-day loading or any condition of loading previously used in the design of the existing structure. If sidewalk loading was or is incorporated in the design of the structure, it shall be included in arriving at a proper design live load ratio. Also, whenever the weight of a utility attachment is included in the design of a structure, the utility weight shall be included in the design live load ratio.

All items that contribute to the longitudinal carrying capacity of the structure element shall be included.

Superstructure:

All items of the superstructure exclusive of the roadway deck slab, sidewalks and railing shall be included. However, when composite action is utilized in the design, the roadway concrete (deck slab and reinforcement) shall be included.

Substructure:

All material in the piers and abutments, i.e., concrete, reinforcing, foundations and piling shall be included. Wingwalls shall also be included when they are tied to the main abutment wall and/or are supported on a monolithic footing. Seal coats, metal shoes and cofferdams necessary to facilitate foundation construction shall not be included.

Whenever possible, cost assessments shall be based on final quantities and actual contract prices. When final quantities and actual contract prices are not available, the plan quantities and present-day estimated prices shall be used. When present-day estimated prices are used, the cost of applicable structural items shall be prorated to time of actual construction by application of the Engineering News-Record Cost Indices. Also, when estimated prices are used, 10% of the cost of applicable structural items shall be included in the total cost of structure to cover engineering contingencies. The 1913 Cost Index shall be used if the structure was built prior to the year 1913.

In no case shall the assessment to utility companies to support their facilities be less than $300.

When contract prices are used in the cost assessment computations, the cost assessment formula is as follows:

$$\text{Assessment} = \frac{a}{b} \times c$$

When estimated prices are used in the cost assessment computations, the cost assessment formula is as follows:

$$\text{Assessment} = \frac{a}{b} \times \frac{e}{f} \times (c + d)$$

Where:

a = Weight of Utility

b = Design Live Load

c = Cost of Applicable Structural Items

d = 10% for Engineering and Contingencies

e = Cost Index - Year of Construction

f = Cost Index - Present Day

2.6 Permits Projects

Permits Projects occur when a municipality, county, city, private developer, etc. would like to encroach on, build on, or build underneath an existing IDOT structure or right-of-way (ROW). Typically, the primary approval for a Permit Project is given through the Region or District. For most all Permits Projects, a TSL is required. The Bureau of Bridges and Structures is responsible for verifying that the TSL meets all Departmental policies for structures. The actual process by which Permits Projects are finally approved varies from District to District and/or Region to Region. As such, they should initially be contacted for approval coordination of these projects during their initial phases.

Section 3 Design

3.1 General

This manual differentiates between portions of sections which deal with LRFD only, LFD only, and LRFD and LFD for superstructures and substructures. As appropriate, the headings "*LRFD*", "*LFD*", and "*LRFD and LFD*" in italicized and underlined type will appear in the sections below. Some sections are not specification dependent and consequently contain no delineations. Base Sheets referenced in this Section can be found here: http://www.idot.illinois.gov/doing-business/procurements/engineering-architectural-professional-services/Consultants-Resources/index#CADD.

3.1.1 Plan Presentation

The Design plans and Specifications are the means of communication between the design engineer and the contractor. For the structure to be built in accordance with the structural design and governing policies, the plans should be both accurate and explicit.

For permanent record, all plans are microfilmed (electronic records are also likely in the near future). For lettings, plan sheets are 11 in. x 17 in. which is approximately one-quarter full size 24 in. x 36 in. sheets. These quarter-size prints are used by the contractor for compiling a bid as well as constructing the bridge. Since clarity shall be maintained for construction accuracy and microfilming processes, the paragraphs below are presented as guidelines for achieving plan quality:

> Sharp line work, clear uniform lettering, appropriate views, and accurate legible dimensions and elevations are required.
>
> All lettering shall be slant style, upper and lower case using IDOT BBS fonts, except for titles which shall be upper case of the same style and font. The body of all letters, numerals and symbols shall be no smaller than $\frac{1}{10}$ in. in height on full size drawings or $\frac{1}{20}$ in. on quarter-size drawings.

Plans should be drawn using a CADD system and submitted in the format preferred by the District.

3.1.2 Content of Bridge Plans

Bridge Plans are composed of sheets covering the following aspects of a structure and are usually presented in the order given below on IDOT projects:

1. General Plan and Elevation (GP&E)
2. General Data (except for simple structures)
3. Footing Layout (if required)
4. Stage Construction Details (if required)
5. Temporary Barrier or Temporary Railing Details (if required)
6. Top of Deck Elevations
7. Top of Approach Slab Elevations
8. Superstructure (Plan and Cross Section)
9. Superstructure Details
10. Diaphragm Details (for bridges with integral or semi-integral abutments)
11. Bridge Approach Slab Details
12. Bridge Railing Details
13. Expansion Joint Details
14. Girder and Framing Details (Steel or Concrete)
15. Bearing Details
16. Abutment Details
17. Pier Details
18. Foundation Details (includes piles)
19. Bar Splicer Assembly Details
20. Cantilever Forming Brackets
21. Boring Logs or Subsurface Data Profile Plot

3.1.3 General Notes

The following plan notes are required, when applicable, to supplement the Standard Specifications. The notes marked with an asterisk (*) should be placed near the associated detail as indicated.

No	*Note*	*Application*
1.	Fasteners shall be ASTM A325 Type 1, mechanically galvanized bolts (in painted areas and ASTM A325 Type 3 in unpainted areas). Bolts ____ in. ϕ, holes ____ in. ϕ, unless otherwise noted.	Note in () added when unpainted structural steel is used. Show the predominant bolt and hole diameters and note exceptions in applicable details. If ASTM A490 bolts are required, preface note with "Except as otherwise specified" and add notes where applicable.
2.	Calculated weight of Structural Steel =	When multiple grades are used, show quantity for each. Show quantity to nearest 10 lbs.
3.	All structural steel shall be AASHTO M 270 Grade XXW (except expansion joints which shall be AASHTO M 270 Grade XX).	Structural steel is unpainted M 270 Grade 50W or HPS70W weathering steel. Use Note #18 or Note #19 with this note as applicable. Note in ( ) to be added with appropriate Grade (XX) when structure has deck expansion joints utilizing steel plates or bars.
4.	No field welding is permitted except as specified in the contract documents.	All structures with primary steel members.
5.	The Contractor shall test the existing welds by non-destructive methods within 2 ft. of the end of the existing cover plates for cracks after removal of the existing concrete deck. Dye penetrant (PT), magnetic particle (MT), or other approved testing method shall be performed by qualified personnel approved by the Engineer. If cracks are found, report them to the Bureau of Bridges and Structures for disposition. The cost of testing is included in Removal of Existing Concrete Deck. The cost of crack repair, if necessary, will be paid for according to Article 109.04 of the Standard Specifications.	For existing steel beams or girders with welded cover plates that are to remain and be reused after partial or complete deck replacement.
6.	Reserved	
7.	Reinforcement bars designated (E) shall be epoxy coated.	Place in General Notes only.
8.	Prior to pouring the new concrete deck, all heavy or loose rust, loose mill scale, and	For bridge rehabilitation projects where the complete or partial

	other loose or potentially detrimental foreign material shall be removed from the surfaces in contact with concrete. Tightly adhered paint may remain unless otherwise noted. Removal shall be accomplished by methods that will not damage the steel and the cost will be included in the pay item covering removal of the existing concrete. As directed by the Engineer, existing construction accessories welded to the top flange of beams and girders shall be removed. The weld areas shall be ground flush and inspected for cracks using magnetic particle testing (MT) or dye penetrant testing (PT) by qualified personnel approved by the Engineer. Any cracks that can not be removed by grinding ¼ in. deep shall be identified and reported to the Bureau of Bridges and Structures for further disposition. The cost of removing welded accessories, grinding and inspecting weld areas and grinding cracks will be paid for according to Article 109.04 of the Standard Specifications.	removal of existing concrete deck is specified.
9.	If the Contractor elects to use cantilever forming brackets on the exterior beams or girders, the brackets shall be placed at the same locations as required for the hardwood blocks in Article 503.06(b) of the Standard Specifications. If additional cantilever forming brackets are required, hardwood blocking shall be wedged between the exterior and first interior beam at each of these additional bracket locations.	When the exterior beam overhang on a steel girder exceeds 3 ft. – 3 in. or when the overhang exceeds half the beam spacing.
10.	Plan dimensions and details relative to existing plans are subject to nominal construction variations. The Contactor	Widening, repair or rehabilitation of existing structures.

	shall field verify existing dimensions and details affecting new construction and make necessary approved adjustments prior to construction or ordering of materials. Such variations shall not be cause for additional compensation for a change in scope of the work, however, the Contractor will be paid for the quantity actually furnished at the unit price bid for the work.	
11.	Protective coat shall not be applied to surfaces to which Waterproofing Membrane System is applied.	When waterproofing membrane is specified.
12.	Bearing seat surfaces shall be constructed or adjusted to the designated elevations within a tolerance of ⅛ in. (0.01 ft.). Adjustment shall be made either by grinding the surface or by shimming the bearings.	All continuous steel beam structures.
13.	Concrete Sealer shall be applied to the designated areas of the _____.	For new substructures per Sections 3.8.1 and 3.9.1.
14.	Cleaning and field painting of structural steel shall be done under a separate painting contract.	When painting existing steel to be delayed to a separate paint contract.
15.	The existing structural steel coating contains lead. The Contractor shall take appropriate precautions to deal with the presence of lead on this project.	Steel structures erected prior to 1986 (or as determined from existing plans) with lead based primer.
16.	The Inorganic Zinc Rich Primer / Acrylic / Acrylic Paint System shall be used for shop and field painting of new structural steel except where otherwise noted. The color of the final finish coat for all interior steel surfaces shall be gray, Munsell No. 5B 7/1. The color of the final finish coat for the exterior and bottom flange of the fascia beams shall be (**).	Painting new steel as part of Furnishing and Erecting Structural Steel. **Colors for fascias: 1. Interstate Green, Munsell No. 7.5G 4/8 2. Reddish Brown, Munsell No. 2.5YR 3/4 3. Blue, Munsell No. 10B 3/6 4. Gray, Munsell No. 5B 7/1
17.	The Organic Zinc Rich Primer / Epoxy / Urethane Paint System shall be used for painting of new structural steel except	Painting new steel (entire system in the shop) as part of Furnishing and Erecting Structural Steel.

	where otherwise noted. The entire system shall be shop applied, with the exception of the exterior surface and the bottom of the bottom flange of fascia beams, masked off connection surfaces, field installed fasteners and damaged areas shall be touched up in the field. The color of the final finish coat for all interior steel surfaces shall be Gray, Munsell No. 5B 7/1. The color of the final finish coat for the exterior and bottom flange of the fascia beams shall be (**).	**Colors for fascias: 1. Interstate Green, Munsell No. 7.5G 4/8 2. Reddish Brown, Munsell No. 2.5YR 3/4 3. Blue, Munsell No. 10B 3/6 4. Gray, Munsell No. 5B 7/1
18.	Structural steel shall only be painted for a distance equal to the depth of embedment into the concrete cap plus 3 in. Painted areas shall be primed in the shop with a Department approved zinc rich primer. Field painting will not be required.	New weathering steel with integral or semi-integral abutments.
19.	All structural steel and exposed surfaces of bearings within a distance of ___ ft. each way from the deck joints shall be painted as specified in Section 506 of the Standard Specifications.	New weathering steel on structures with deck joints. Use with Note #3. The distance shall be three times the depth of the beams or girders, but not exceeding 10 ft., rounded to the nearest ft.
20.	Reserved	
21.	Layout of the slope protection system may be varied to suit ground conditions in the field as directed by the Engineer.	Stream crossings only.
22.	The embankment configuration shown shall be the minimum that must be placed and compacted prior to construction of the abutments.	All structures requiring new or widened embankment cones.
23.	Reserved	
24.	Reserved	
25.	The Contractor shall obtain a construction permit from the Illinois Department of Natural Resources (IDNR), Office of Water Resources for any temporary construction	When temporary construction features are placed within public waters. Also place the term “Public Waters” in the title block of the

	activity placed in the water except cofferdams. This shall include the placement of material for run-arounds, causeways, etc. Any permit application by the Contractor shall refer to the IDNR 3704 Floodway Construction permit number allowing permanent construction as shown in the contract plans.		Design plans to alert the Contractor of this additional responsibility as noted.
26.	Seal coat thickness design is based on the Estimated Water Surface Elevation (EWSE). Cofferdam design details and proposed changes in seal coat thickness shall be submitted to the Engineer for approval with the cofferdam design.		When a cofferdam with seal coat is shown on the plans.
27.	All cross frames or diaphragms shall be installed as steel is erected and secured with erection pins and bolts except as otherwise noted. Individual cross frames or diaphragms at supports may be temporarily disconnected to install bearing anchor rods.	*	Straight steel girder bridges. “Except as otherwise noted” typically includes for stage construction and differential deflection. Place note with framing plan or appropriate bracing details.
28.	All cross frames or diaphragms between beams or girders shall be installed with erection pins and bolts in accordance with the erection plan approved by the Engineer. Individual cross frames or diaphragms at supports may be temporarily disconnected to install bearing anchor rods.	*	Horizontally curved steel bridges, including those considered equivalently straight as per Section 3.3.9, and as applicable for high skews, flares, cross girders, etc. that require complex erection methods. Place note with framing plan or appropriate bracing details.
29.	Load carrying components designated “NTR” shall conform to the Impact Testing Requirement, Zone 2.	*	Components designed for tensile stress require at least a minimum toughness to avoid crack propagation. These components include wide flange beams, tension flanges, webs, of plate girders, all splice plate material except fill plates, and bracing designed for live load in curved or highly skewed (> 40°) structures. Place note on sheet detailing structural steel.
30.	(Finger plate or Modular) expansion joints shall be assembled in their final relative position with the ends in place for shop inspection and acceptance.	*	Finger plate and modular expansion devices. Insert the item(s) within the ( ) that apply to the project. Place

note with finger plate or modular joint details.

31. The Contractor shall make allowance for the deflection of forms, shrinkage and settlement of falsework, in addition to allowance for dead load deflection. Forms for deck slab shall be removed prior to placement of bridge approach slab.

R.C. Slab or R.C. T-Beam bridges.

32. Reserved

33. The concrete for bridge decks finished according to Article 503.16(a) of the Standard Specifications shall be placed and compacted parallel to the skew in uniform increments along centerline of bridge. The machine used for finishing shall be set parallel to the skew for striking off and screeding the concrete.

For all decks on steel or concrete girder structures with skew angle 45º or greater or structures with skew angle exceeding 30º and the ratio of the width of deck pour (out-to-out deck or between longitudinal bonded joints) to the span length exceeding 0.8.

34. When the deck pour is stopped for the day at one or more of the transverse bonded construction joints in the deck pouring sequence as shown, the next pour shall not be made until both of the following are met:

    1. At least 72 hours shall have elapsed from the end of the previous pour.

    2. The concrete strength shall have attained a minimum flexural strength of 650 psi or a minimum compressive strength of 3500 psi.

* When a deck pouring sequence is shown on the plans. Place note on sheet with deck pouring sequence.

35.	The structural steel plates of the Bearing Assembly shall conform to the requirements of AASHTO M 270 Grade XX (AASHTO M 270 Grade XXW.)	*	To be used when steel other than Grade 36 is required by design or when unpainted steel bearing plates are used for HLMR bearings (pot or disc) or elastomeric bearings. Insert appropriate Grade for XX. Place note on applicable HLMR (pot or disc) or elastomeric bearing sheet.
36.	Two ⅛ in. adjusting shims shall be provided for each bearing in addition to all other plates or shims and placed as shown on bearing details.	*	All continuous steel beam structures. For Type I elastomeric bearings, shims should be detailed between the bearing and the flange, and not extend beyond their mutual contact area. Place note on applicable bearing detail sheet.
37.	All (embedded and separate) bearing plates, side retainers, anchor bolts, nuts, washers and pintles shall be galvanized according to AASHTO M111 or M232 as applicable.	*	When specified for structures with metallized or galvanized steel beams, or (for all PPC I and Bulb T-beam structures with bearings that have metal parts). Place note on applicable bearing detail sheet.
38.	H.S. bolts in bearing assembly shall be galvanized according to AASHTO M298 Class 50.	*	For all PPC I and Bulb T-beam structures with H.S. bolts in bearing assemblies and when specified for structures with steel beams. Place note on applicable bearing detail sheet.
39.	Excavation behind existing abutment walls shall be performed to balance front and back soil pressure before removing the existing superstructure. The Contractor shall sawcut the upper portion of the existing abutment at the stage removal line before Stage I removal to ensure the remaining portion will not be prematurely damaged.		Removal of existing closed abutment structures (restrained top and bottom).
40.	Backfill shall be placed behind the abutment after the superstructure has been poured and falsework removed. See Article 502.10 of the Standard Specifications.	*	Closed abutments (restrained top and bottom). Place note on abutment sheet.
41.	Slope wall shall be reinforced with welded wire fabric, 6 in. x 6 in. – W4.0 x W4.0, weighing 58 lbs. per 100 sq. ft.	*	For all concrete slope walls. Place note with slopewall details.

42.	Piles shall be driven through _____ diameter precored holes extending to elevation _____ according to Article 512.09(c) of the Standard Specifications. Cost included in driving piles.	* When precoring of pile locations is specified. Place note with pile data on appropriate substructure sheet.
43.	If the Contractor chooses to alter the temporary cantilevered sheet piling design requirements shown on the plans, a design submittal including plan details and calculations will be required for review and acceptance by the Engineer.	* When a cantilever sheet piling design is shown on the plans. Place note on sheet with sheet piling details.
44.	The Contractor shall connect the first sheet to the existing abutment wall to ensure stability of sheets driven to the top of the existing footing. This connection shall be reviewed and accepted by the Engineer and included in the cost for Temporary Sheet Piling.	* When a footing interferes with required sheet piling penetration. Place note on sheet with sheet piling details.
45.	A cantilevered sheet piling design does not appear feasible and additional members or other retention systems may be necessary. The Contractor shall submit a temporary soil retention system design including plan details and calculations for review and acceptance by the Engineer.	* When a temporary soil retention system is on the plans. Place note on sheet with temporary soil retention system details.
46.	The foundation design is based on the following maximum reactions applied at the top of the footing/pedestal wall: Exterior footings: xx (vertical), xx (horizontal) Interior footings: xx (vertical) The Contractor shall verify that the selected structure meets these design parameters. If the design parameters are exceeded, a complete foundation design with calculations, details, and the required seals shall be submitted for review and approval.	For all three sided precast concrete structures.

47.	If a portion of the drilled shaft web walls or concrete encasement is under water, reinforcement may be placed underwater into forms. Concrete shall be tremied according to Article 503.08 of the Standard Specifications to an elevation of 1'-0" above the water line at the time of construction.	*	When a portion of drilled shaft web walls or concrete encasement is shown to be below the EWSE. Place note on applicable pier sheet.
48.	Reserved		
49.	Existing Name Plate shall be cleaned and relocated next to new Name Plate. Cost included with Name Plates.	*	When new name plates are being added to rehabilitated bridges with existing name plates. Place note under name plate detail.
50.	Existing reinforcement shall be cleaned and incorporated into the new construction. Cost included with Concrete Removal.	*	When existing reinforcement is to be reused during rehabilitation projects. Place note on sheet where reinforcement is to be reused.
51.	The anchor bolt sizes and grades shown constitute a calculated seismic structural fuse. Substitution of higher diameter and/or grade anchor bolts will not be allowed.	*	When the seismic load case controls the design of anchor bolts in zones other than Seismic Performance Zone 1. Place note on applicable sheet with anchor bolt details.

3.1.4 Reinforcement Presentation

On any plan sheet which presents drawings for a portion of the bridge structure such as a pier, all reinforcement bars pertinent to that pier shall be detailed and billed on that sheet.

In no case shall the same designation be used for reinforcement bars of a different size, length or shape when they are employed in elements of the substructure or superstructure.

If a horizontal reinforcement bar in an abutment carries an "h_5" designation and an "h" bar of the same size, length and shape is used in the design of a pier under the same structure, this latter bar shall also carry an "h_5" designation unless the structure is of such magnitude as to make this coordination impractical. Bars of like designation (such as "h") shall be numbered in sequence as h, h_1, h_2, etc.

When detailing lengths of reinforcement bars, consideration shall be given to transportation and handling and, where extreme lengths are contemplated, to availability and special orders.

All sizes of bars are readily available in lengths up to 60 ft. However, sizes #3 and #4 of more than 40 ft. tend to bend in handling and should be avoided. Sizes #5 through #18 in lengths exceeding 60 ft. can be rolled at mills by special order. In any circumstance, 70 ft. should be considered the maximum limit. For shipping and handling convenience, 50 ft. lengths should be considered the practical limit for all conventional structures.

When the location of bar splices is arbitrary, as in the case of the longitudinal reinforcement of deck slabs on stringers, the following lengths are preferred:

#6 bars and up …… 36 ft.
#4 & #5 bars …… 30 ft.

If it is necessary to provide varying length reinforcement bars in order to accommodate a flared condition on any part of a structure, do not detail the bars in a table of small increment changes in length; detail the bars in groups of the same length to accommodate the flare by variance of lap. All bars in the same group shall carry the same bar designation. This criterion is not to be construed as applicable to the ends of the deck slab of a skewed structure supported on steel stringers; in this case, the bars shall be cut in the field as described under Section 3.2.3 - Reinforcement (Treatment of Skewed Decks).

On stage construction projects for both superstructure and substructure elements, bar splicer assemblies shall be used to connect reinforcement bars which cross the stage construction line. Bar splicer assemblies are preferred over extending the reinforcement through the forms to make a lap splice because they provide ease of construction and a safer work environment.

Bars shall be detailed to the closest inch of length and the weight of reinforcement bars shown in the Bill of Material shall be to the nearest 10 lbs.

3.1.5 Reinforcement Designation

To provide uniformity on all bridge plans, the following reinforcement bar designations shall be used:

a	→	Transverse Slab and Median Reinforcement
b	→	Longitudinal Slab, Sidewalk and Median Reinforcement
c	→	Sidewalk and Median Reinforcement (Transverse)
d	→	Vertical Reinforcement in Parapet or Dowel bars at any location except Wall to Footing
e	→	Longitudinal Reinforcement in Concrete Parapet
g	→	Main Reinforcement - Concrete Girder
h	→	Substructure Horizontal - Walls
m	→	Horizontal Reinforcement - Diaphragm in Integral Abutments and P.P.C. I-Beam Structures
n	→	Dowel - Wall to Footing
p	→	Pile Caps and Pier Caps - Longitudinal
s	→	Stirrup Bars
t	→	Footing (Transverse)
u	→	Ends of Pier Caps, Pile Caps and Pier Walls
v	→	Vertical Bars (Substructure)
w	→	Footing (Longitudinal)
x	→	Cantilevered Deck Slab (Longitudinal)

Typically, reinforcement bars are epoxy coated and suffixed with the designation "(E)". For example, the 4th size bar for epoxy coated longitudinal parapet reinforcement would have the designation e_3(E). The note below (repeated from Section 3.1.3) shall also be included with the General Notes on the Contract plans. This note is not required on all sheets which have a Bill of Materials which include epoxy coated reinforcement bars.

Note: Reinforcement bars designated (E) shall be epoxy coated.

3.1.6 Total Bill of Material (General Plan & Elevation Sheet)

Regardless of the placement of a coded "Summary of Quantities" on any other sheet, there shall be a "Total Bill of Material" for bridge quantities on the "General Plan and Elevation" sheet if there

is enough space or, if not, it shall be placed on the second sheet. This bill need not include code numbers, but it shall be broken down into Superstructure, Substructure and Total. It shall be carefully checked by the designer to reflect the individual quantity totals within the plans.

3.1.7 Bill of Material (Individual Elements of Bridge)

There shall be separate Bills of Material on the appropriate sheets for the superstructure and individual elements of the substructure to assist bidding and construction. If the expansion piers under a structure are very similar in dimension and reinforcement, it is permissible to combine the quantities into one Bill of Material as long as it is clearly denoted as such.

The fixed pier(s) under a structure would normally differ from the expansion pier(s) in dimension and reinforcement. In this case, the fixed pier(s) shall be detailed on a separate sheet from the expansion pier(s). If the fixed piers under a structure are very similar in dimension and reinforcement, it is permissible to combine the quantities into one Bill of Material as noted above.

The same general criteria as that described for piers shall be applicable to presentation of “Bills of Material” for abutments.

Judgment shall be used in the presentation of all Bills of Material, keeping in mind that the bill is not prepared for the convenience of the designer, but rather for the use and convenience of those who are bidding and constructing the bridge.

3.1.8 Basic Geometry & Footing Layout

The basic geometry for the location of the substructure units shall be clearly shown on the plans.

All portions of the structure shall utilize a common longitudinal reference line. When a structure is on a tangent (straight), this line may be designated as either the Centerline Survey, Centerline Roadway or Centerline North (South, East, West) Bound Lanes. When a structure is on a curve, the reference line preferably should be established and designated as either the “Tangent to Centerline Survey (Roadway, Lanes) at Sta____” or a “Parallel to Tangent to Centerline Survey at Sta. ____”. When all or most of the stringers for a curved deck are to be continuously straight and parallel, the reference line selected should be parallel to these stringers.

Except for very simple geometry, such as a singly symmetric structure on a tangent, a footing layout should be shown on the plans. The layout may be in the form of a small diagram or occupy an entire sheet, depending on the complexity of the geometry.

Figures 3.1.8-1, 3.1.8-2 and 3.1.8-3 show typical examples of footing layouts.

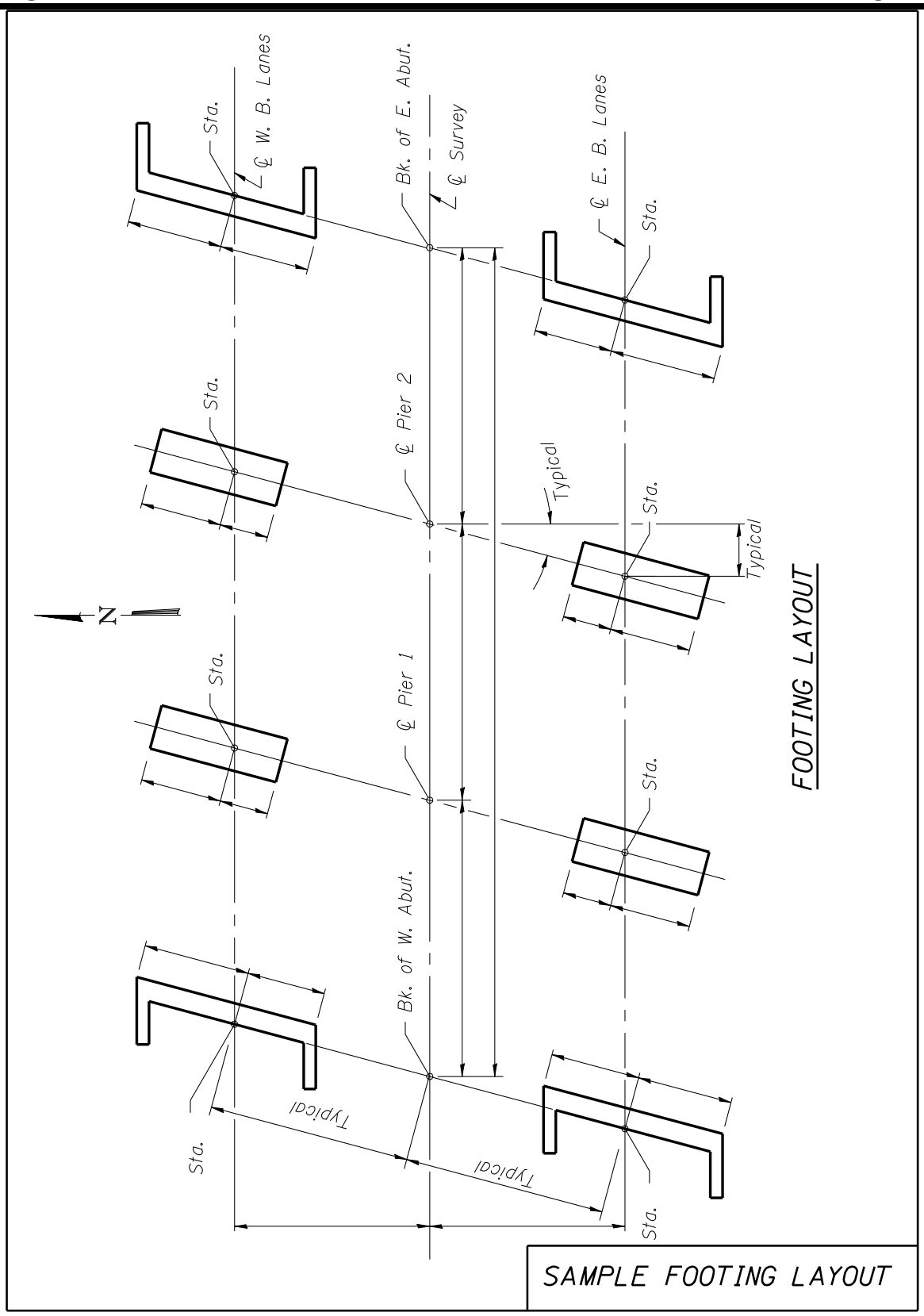
Sta.
℄ W. B. Lanes
Bk. of E. Abut.
℄ Survey
℄ E. B. Lanes
Sta.
Sta.
℄ Pier 2
Typical
Sta.
Typical
N
Sta.
℄ Pier 1
Sta.
Bk. of W. Abut.
Typical
Typical
Sta.
Sta.
FOOTING LAYOUT
SAMPLE FOOTING LAYOUT

Figure 3.1.8-1

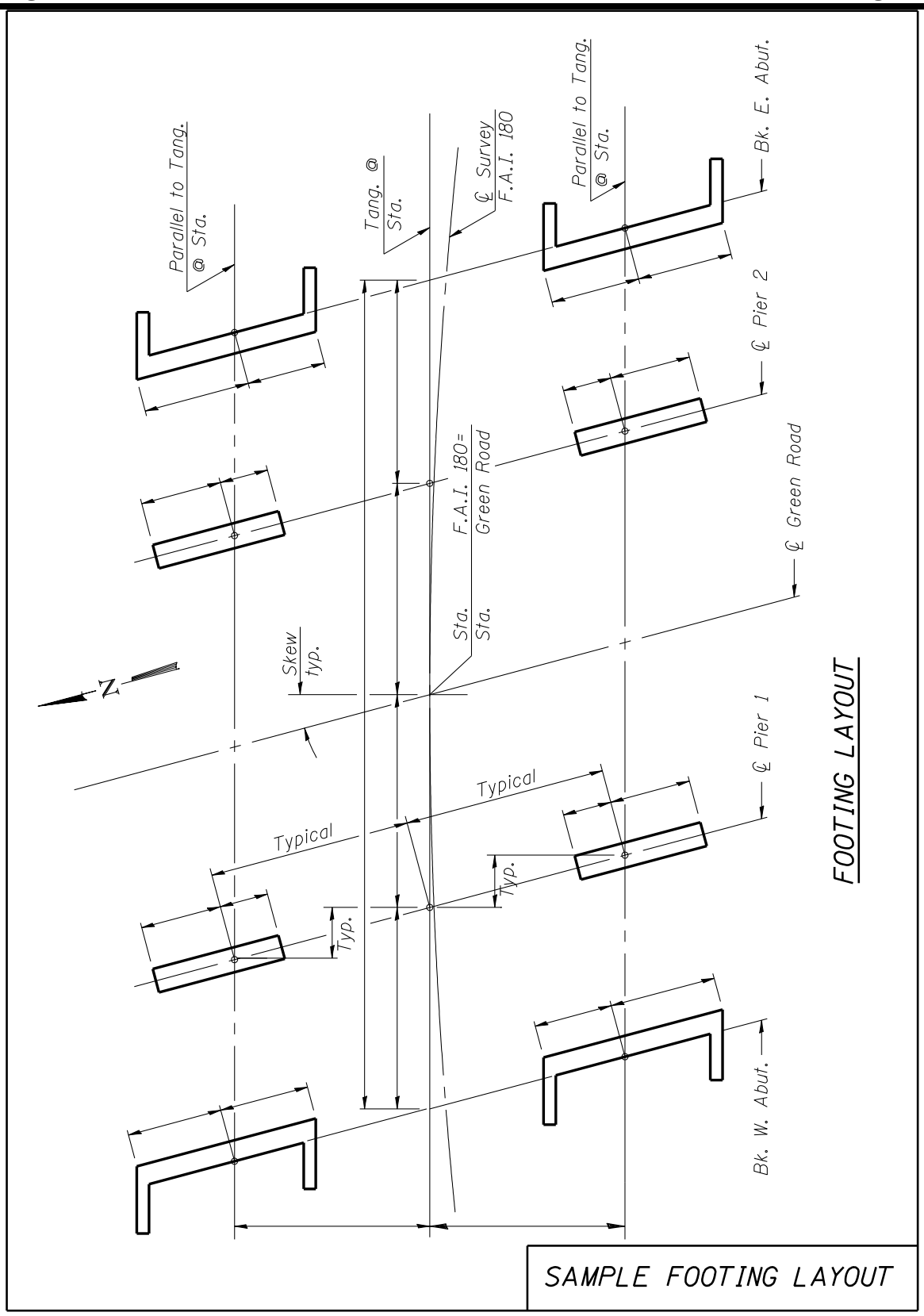
Parallel to Tang.
@ Sta.
Tang. @
Sta.
℄ Survey
F.A.I. 180
Parallel to Tang.
@ Sta.
Bk. E. Abut.
℄ Pier 2
F.A.I. 180=
Green Road
℄ Green Road
Sta.
Sta.
Skew
typ.
N
℄ Pier 1
Typical
Typical
Typ.
Typ.
FOOTING LAYOUT
Bk. W. Abut.
SAMPLE FOOTING LAYOUT

Figure 3.1.8-2

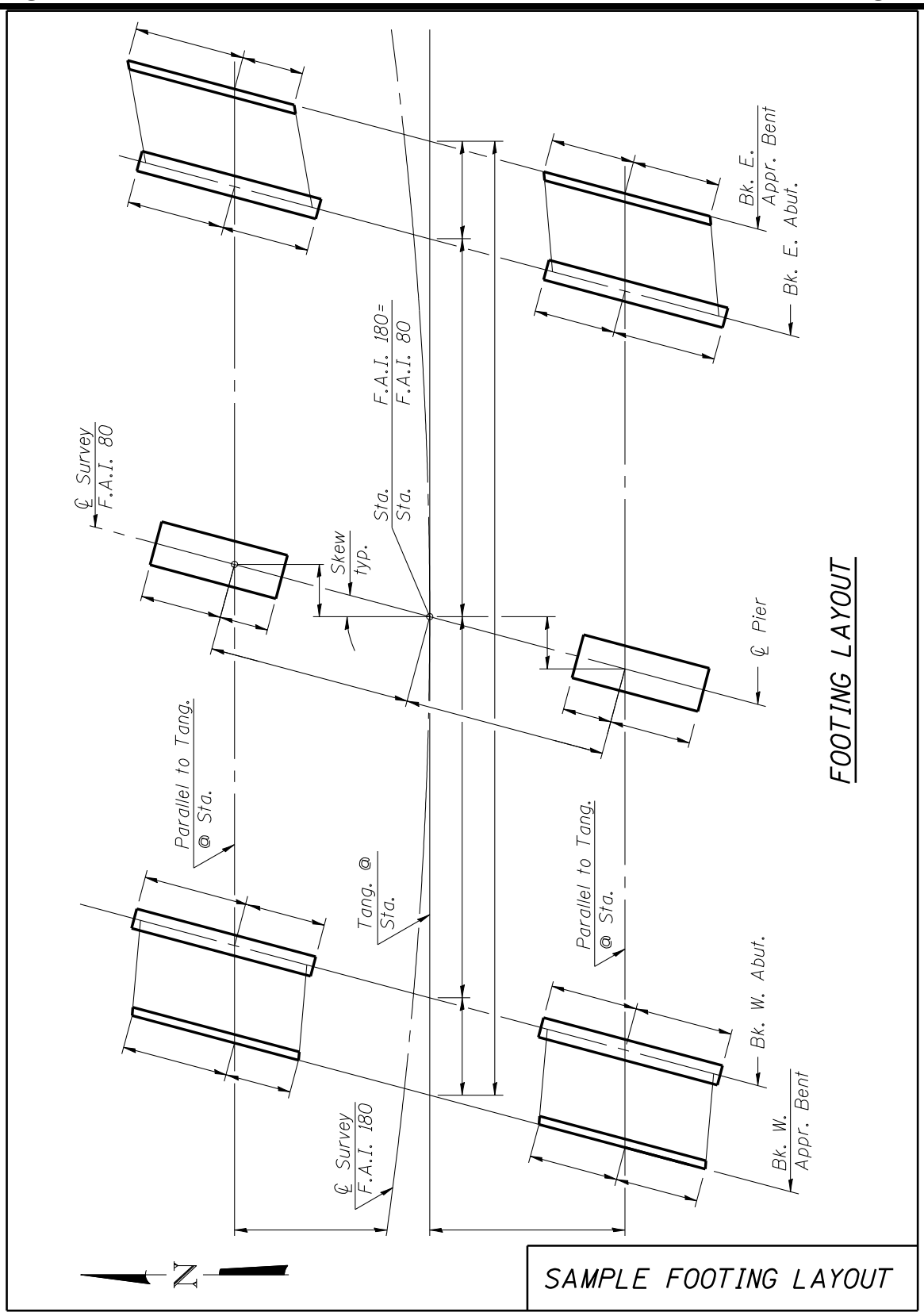
℄ Survey
F.A.I. 80
Skew
typ.
Sta.
Sta.
F.A.I. 180=
F.A.I. 80
Bk. E.
Appr. Bent
Bk. E. Abut.
℄ Pier
FOOTING LAYOUT
Parallel to Tang.
@ Sta.
Tang. @
Sta.
Parallel to Tang.
@ Sta.
Bk. W. Abut.
Bk. W.
Appr. Bent
℄ Survey
F.A.I. 180
N
SAMPLE FOOTING LAYOUT

Figure 3.1.8-3

3.1.9 Top of Slab Elevations

A table showing top of deck slab elevations along the centerline of web for each supporting stringer, each longitudinal bonded and/or stage construction joint, and the profile grade shall be included on the bridge plans for all structures with steel or prestressed concrete primary beams. This table is usually in the form of tabular computer output on individual plan sheets. Samples are shown in Figures 3.1.9-1 to 3.1.9-4. In addition, top of approach slab elevations along the profile grade, locations of changes in cross slope, edges of shoulder and stage construction joint shall also be provided on a separate sheet(s) after the deck elevations. Samples are shown in Figures 3.1.9-5 and 3.1.9-6. Note that Figures 3.1.9-1 through 3.1.9-6 are for a bridge project with grinding and smoothness criteria, i.e. the deck and bridge approach slabs are poured ¼ in. thicker than final thickness. See Section 3.2.1 for more information on projects with grinding and smoothness criteria.

Top of slab elevations shall be provided for slab bridges if the skew is greater than 30° or it is located on a vertical curve. Elevations for slab bridges shall be given along the profile grade and the stage construction joint.

If a stringer lies below a curb, sidewalk or median section, the elevations shall be given for a theoretical top of slab, i.e. the elevation of the top of slab considering that there is no curb, sidewalk or median.

The increments for elevations along each line shall be ten ft. with any odd increment at the end of a span not greater than fifteen ft. (≤ 15 ft.) and not less than five ft. (≥ 5 ft.). A new series of ten ft. increments shall be started at the beginning of each respective span along the structure. In all cases, the increments shall progress in the direction of the stationing on the bridge for the full length of the structure. See Figure 3.1.9-1 for an illustrative example of these concepts. Note that Figure 3.1.9-1 includes elevations for expansion joint lines. These elevations are required for contracts with grinding and smoothness criteria only.

The top of slab elevations at incremental points shall also be given with adjustments for dead load deflection of the bridge in an additional tabular column which are the finished elevations for construction of the deck slab. These elevations shall be keyed to a diagrammatic plan. Actual dead load deflection (weight of concrete deck and all superimposed dead loads except future wearing surface) diagrams shall be shown on this sheet indicating deflection ordinates at the

quarter points and mid-point of all spans for all beams (exterior and interior). However, if the variance in deflection between beams is ⅛ in. or less, one dead load deflection diagram is adequate for all beams. See Figure 3.1.9-2 for an illustrative example. Dead load deflection diagrams shall be qualified with the following note for projects which do not need to meet the grinding and smoothness criteria:

> *The above deflections are not for use in the field if the Engineer is working from the "Theoretical Grade Elevations Adjusted for Dead Load Deflection."*

Figure 3.1.9-2 gives a version of the note above which should only be used when the grinding and smoothness criteria are included on the project. Note also that the instructions for determining fillet heights in Figure 3.1.9-2 have been modified from Figure 3.2.4-11 and Figure 3.2.4-12 because grinding and smoothness criteria are included.

Dead load deflection diagrams indicating deflection ordinates at the quarter points and mid-point of all spans shall be provided for all slab bridges. The note above shall also be included on the plans when top of slab elevations are provided according to the first and second paragraphs of this section.

An additional tabular column for adjusted elevations is not required for approach slabs on projects which do not include the grinding and smoothness criteria. When grinding and smoothness criteria are specified, the additional column is required and shall reflect the additional ¼ in. (0.02 ft.) of concrete poured before grinding. See Figures 3.1.9-5 and 3.1.9-6.

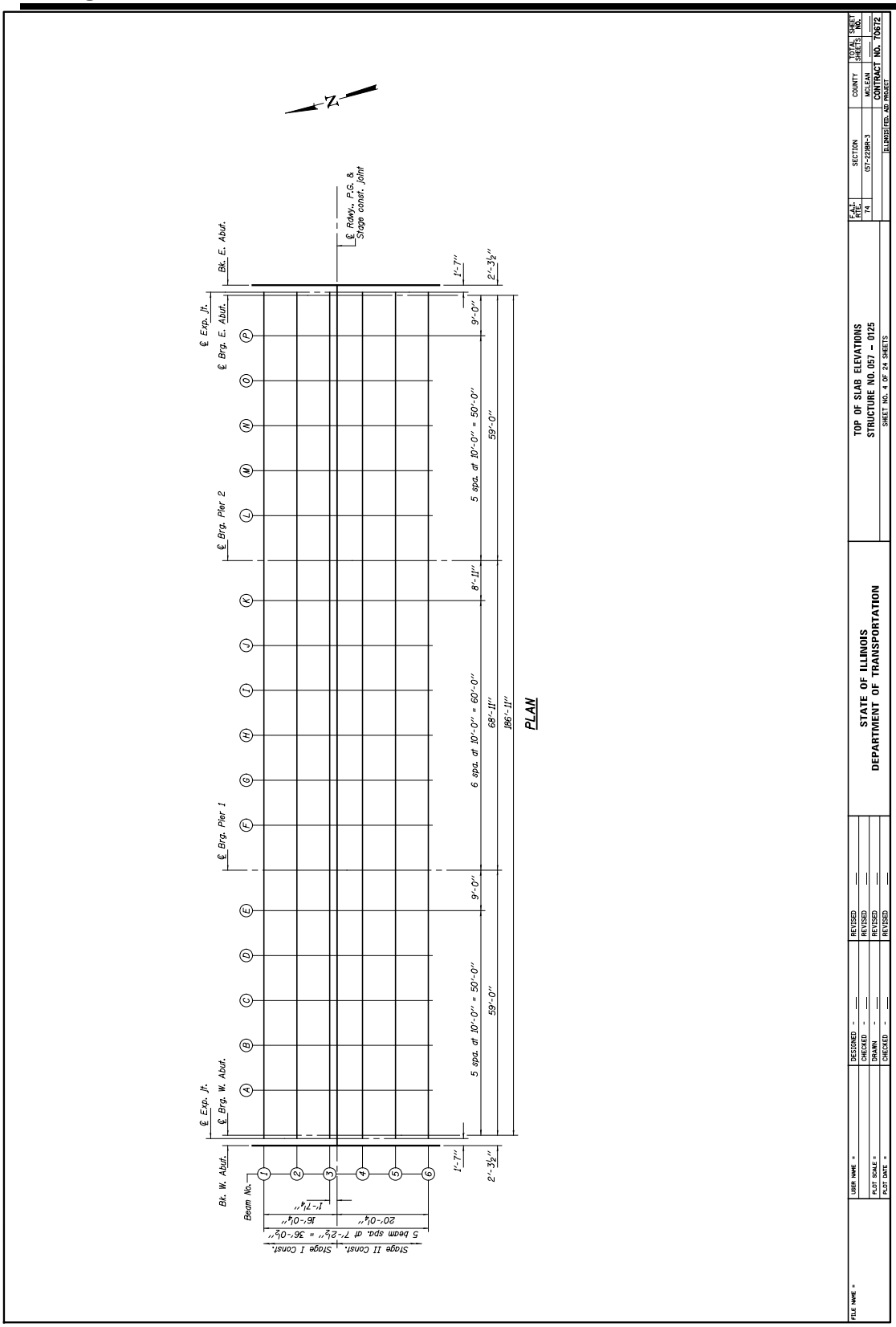
N
℄ Rdwy., P.G. & Stage const. joint
Bk. E. Abut.
℄ Exp. Jt.
℄ Brg. E. Abut.
℄ Brg. Pier 2
℄ Brg. Pier 1
℄ Exp. Jt.
℄ Brg. W. Abut.
Bk. W. Abut.
Beam No.
1
2
3
4
5
6
A
B
C
D
E
F
G
H
I
J
K
L
M
N
O
P
1'-7"
2'-3½"
9'-0"
5 spa. at 10'-0" = 50'-0"
59'-0"
8'-11"
6 spa. at 10'-0" = 60'-0"
68'-11"
186'-11"
PLAN
5 beam spa. at 7'-2½" = 36'-0½"
20'-0¼"
16'-0¼"
1'-7¼"
Stage II Const.
Stage I Const.
FILE NAME =
USER NAME =
PLOT SCALE =
PLOT DATE =
DESIGNED - ___
CHECKED - ___
DRAWN - ___
CHECKED - ___
REVISED ___
REVISED ___
REVISED ___
REVISED ___
STATE OF ILLINOIS
DEPARTMENT OF TRANSPORTATION
TOP OF SLAB ELEVATIONS
STRUCTURE NO. 057 – 0125
SHEET NO. 4 OF 24 SHEETS
F.A.I. RTE. 74
SECTION (57-22)BR-3
COUNTY MCLEAN
CONTRACT NO. 70672
ILLINOIS FED. AID PROJECT
TOTAL SHEETS
SHEET NO.

Figure 3.1.9-1

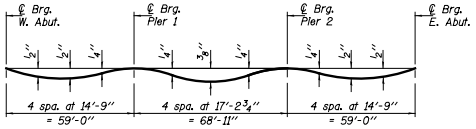

DEAD LOAD DEFLECTION DIAGRAM

(Includes weight of concrete only.)

Note: The above deflections are not to be used in the field if the engineer is working from the grade elevations adjusted for dead load deflections and grinding as shown below and on sheets 6 & 7 of 24.

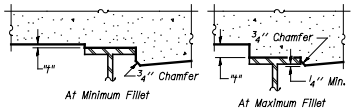

To determine "Y": After all structural steel has been erected, elevations of the top flanges of the beams shall be taken at intervals shown on sheet 4 of 24. These elevations subtracted from the "Theoretical Grade Elevations Adjusted for Dead Load Deflection and Grinding" shown below and on sheets 6 & 7 of 24, minus 8 1/4" deck thickness, equals the fillet heights "Y" above top flange of beams.

The slab is to be ground after curing to achieve smoothness but the slab is not to be ground to elevations below the "Theoretical Grade Elevations" shown below and on sheets 6 & 7 of 24. For grinding the deck, see Special Provisions.

FILLET HEIGHTS

BEAM 1

Location	Station	Offset	Theoretical Grade Elevations	Theoretical Grade Elevations Adjusted for Dead Load Deflection & Grinding
BK. W .ABUT.	103804.25	-16.02	757.18	757.20
CL. EXP. JT.	103805.83	-16.02	757.17	757.19
CL. BRG. W. ABUT.	103806.54	-16.02	757.17	757.19
A	103816.54	-16.02	757.09	757.13
B	103826.54	-16.02	757.01	757.08
C	103836.54	-16.02	756.94	757.01
D	103846.54	-16.02	756.88	756.93
E	103856.54	-16.02	756.81	756.85
CL. BRG. PIER 1	103865.54	-16.02	756.76	756.78
F	103875.54	-16.02	756.71	756.74
G	103885.54	-16.02	756.65	756.69
H	103895.54	-16.02	756.6	756.66
I	103905.54	-16.02	756.56	756.61
J	103915.54	-16.02	756.52	756.56
K	103925.54	-16.02	756.48	756.51
CL. BRG. PIER 2	103934.46	-16.02	756.45	756.47
L	103944.46	-16.02	756.42	756.46
M	103954.46	-16.02	756.39	756.44
N	103964.46	-16.02	756.37	756.44
O	103974.46	-16.02	756.35	756.41
P	103984.46	-16.02	756.34	756.38
CL. BRG. E. ABUT.	103993.46	-16.02	756.32	756.34
CL. EXP. JT.	103994.17	-16.02	756.32	756.34
BK. E. ABUT.	103995.75	-16.02	756.32	756.34

BEAM 2

Location	Station	Offset	Theoretical Grade Elevations	Theoretical Grade Elevations Adjusted for Dead Load Deflection & Grinding
BK. W .ABUT.	103804.25	-8.81	757.32	757.34
CL. EXP. JT.	103805.83	-8.81	757.31	757.33
CL. BRG. W. ABUT.	103806.54	-8.81	757.30	757.32
A	103816.54	-8.81	757.22	757.27
B	103826.54	-8.81	757.15	757.21
C	103836.54	-8.81	757.08	757.14
D	103846.54	-8.81	757.01	757.06
E	103856.54	-8.81	756.95	756.98
CL. BRG. PIER 1	103865.54	-8.81	756.89	756.91
F	103875.54	-8.81	756.84	756.87
G	103885.54	-8.81	756.79	756.83
H	103895.54	-8.81	756.74	756.79
I	103905.54	-8.81	756.69	756.74
J	103915.54	-8.81	756.65	756.69
K	103925.54	-8.81	756.61	756.64
CL. BRG. PIER 2	103934.46	-8.81	756.58	756.60
L	103944.46	-8.81	756.55	756.59
M	103954.46	-8.81	756.53	756.58
N	103964.46	-8.81	756.50	756.57
O	103974.46	-8.81	756.48	756.54
P	103984.46	-8.81	756.47	756.51
CL. BRG. E. ABUT.	103993.46	-8.81	756.46	756.48
CL. EXP. JT.	103994.17	-8.81	756.46	756.48
BK. E. ABUT.	103995.75	-8.81	756.46	756.48

BEAM 3

Location	Station	Offset	Theoretical Grade Elevations	Theoretical Grade Elevations Adjusted for Dead Load Deflection & Grinding
BK. W .ABUT.	103804.25	-1.6	757.43	757.45
CL. EXP. JT.	103805.83	-1.6	757.42	757.44
CL. BRG. W. ABUT.	103806.54	-1.6	757.41	757.43
A	103816.54	-1.6	757.33	757.38
B	103826.54	-1.6	757.26	757.32
C	103836.54	-1.6	757.19	757.26
D	103846.54	-1.6	757.12	757.17
E	103856.54	-1.6	757.06	757.09
CL. BRG. PIER 1	103865.54	-1.6	757.01	757.03
F	103875.54	-1.6	756.95	756.98
G	103885.54	-1.6	756.90	756.94
H	103895.54	-1.6	756.85	756.90
I	103905.54	-1.6	756.81	756.86
J	103915.54	-1.6	756.76	756.81
K	103925.54	-1.6	756.73	756.76
CL. BRG. PIER 2	103934.46	-1.6	756.70	756.72
L	103944.46	-1.6	756.67	756.70
M	103954.46	-1.6	756.64	756.69
N	103964.46	-1.6	756.62	756.68
O	103974.46	-1.6	756.60	756.66
P	103984.46	-1.6	756.58	756.62
CL. BRG. E. ABUT.	103993.46	-1.6	756.57	756.59
CL. EXP. JT.	103994.17	-1.6	757.57	757.59
BK. E. ABUT.	103995.75	-1.6	756.57	756.59

FILE NAME =	USER NAME =	DESIGNED -	REVISED
		CHECKED -	REVISED
	PLOT SCALE =	DRAWN -	REVISED
	PLOT DATE =	CHECKED -	REVISED

STATE OF ILLINOIS
DEPARTMENT OF TRANSPORTATION

TOP OF SLAB ELEVATIONS
STRUCTURE NO. 057 - 0125
SHEET NO. 5 OF 24 SHEETS

F.A.I. RTE.	SECTION	COUNTY	TOTAL SHEETS	SHEET NO.
74	(57-22)BR-3	MCLEAN		

CONTRACT NO. 70672
ILLINOIS FED. AID PROJECT

Figure 3.1.9-2

℄ ROADWAY, P.G. & STAGE CONSTRUCTION JOINT

Location	Station	Offset	Theoretical Grade Elevations	Theoretical Grade Elevations Adjusted for Dead Load Deflection & Grinding
BK. W .ABUT.	103804.25	0.00	757.46	757.48
CL. EXP. JT.	103805.83	0.00	757.44	757.46
CL. BRG. W. ABUT.	103806.54	0.00	757.44	757.46
A	103816.54	0.00	757.36	757.41
B	103826.54	0.00	757.29	757.35
C	103836.54	0.00	757.22	757.28
D	103846.54	0.00	757.15	757.20
E	103856.54	0.00	757.09	757.12
CL. BRG. PIER 1	103865.54	0.00	757.03	757.05
F	103875.54	0.00	756.98	757.01
G	103885.54	0.00	756.92	756.97
H	103895.54	0.00	756.88	756.93
I	103905.54	0.00	756.83	756.88
J	103915.54	0.00	756.79	756.83
K	103925.54	0.00	756.75	756.78
CL. BRG. PIER 2	103934.46	0.00	756.72	756.74
L	103944.46	0.00	756.69	756.73
M	103954.46	0.00	756.66	756.72
N	103964.46	0.00	756.64	756.71
O	103974.46	0.00	756.62	756.68
P	103984.46	0.00	756.61	756.65
CL. BRG. E. ABUT.	103993.46	0.00	756.60	756.62
CL. EXP. JT.	103994.17	0.00	756.59	756.61
BK. E. ABUT.	103995.75	0.00	756.59	756.61

BEAM 4

Location	Station	Offset	Theoretical Grade Elevations	Theoretical Grade Elevations Adjusted for Dead Load Deflection & Grinding
BK. W .ABUT.	103804.25	5.60	757.37	757.39
CL. EXP. JT.	103805.83	5.60	757.36	757.38
CL. BRG. W. ABUT.	103806.54	5.60	757.35	757.37
A	103816.54	5.60	757.27	757.32
B	103826.54	5.60	757.20	757.26
C	103836.54	5.60	757.13	757.19
D	103846.54	5.60	757.06	757.11
E	103856.54	5.60	757.00	757.03
CL. BRG. PIER 1	103865.54	5.60	756.94	756.96
F	103875.54	5.60	756.89	756.92
G	103885.54	5.60	756.84	756.88
H	103895.54	5.60	756.79	756.84
I	103905.54	5.60	756.74	756.79
J	103915.54	5.60	756.70	756.74
K	103925.54	5.60	756.66	756.69
CL. BRG. PIER 2	103934.46	5.60	756.63	756.65
L	103944.46	5.60	756.60	756.64
M	103954.46	5.60	756.58	756.63
N	103964.46	5.60	756.55	756.62
O	103974.46	5.60	756.53	756.60
P	103984.46	5.60	756.52	756.56
CL. BRG. E. ABUT.	103993.46	5.60	756.51	756.53
CL. EXP. JT.	103994.17	5.60	756.51	756.53
BK. E. ABUT.	103995.75	5.60	756.51	756.53

FILE NAME =	USER NAME =	DESIGNED - ___	REVISED ___	STATE OF ILLINOIS DEPARTMENT OF TRANSPORTATION	TOP OF SLAB ELEVATIONS STRUCTURE NO. 057 – 0125	F.A.I. RTE.	SECTION	COUNTY	TOTAL SHEETS	SHEET NO.
		CHECKED - ___	REVISED ___			74	(57-22)BR-3	MCLEAN		
	PLOT SCALE =	DRAWN - ___	REVISED ___					CONTRACT NO. 70672		
	PLOT DATE =	CHECKED - ___	REVISED ___		SHEET NO. 6 OF 24 SHEETS		ILLINOIS	FED. AID PROJECT		

Figure 3.1.9-3

BEAM 5

Location	Station	Offset	Theoretical Grade Elevations	Theoretical Grade Elevations Adjusted for Dead Load Deflection & Grinding
BK. W .ABUT.	103804.25	12.81	757.25	757.27
CL. EXP. JT.	103805.83	12.81	757.24	757.26
CL. BRG. W. ABUT.	103806.54	12.81	757.23	757.25
A	103816.54	12.81	757.16	757.20
B	103826.54	12.81	757.08	757.14
C	103836.54	12.81	757.01	757.08
D	103846.54	12.81	756.94	756.99
E	103856.54	12.81	756.88	756.91
CL. BRG. PIER 1	103865.54	12.81	756.83	756.85
F	103875.54	12.81	756.77	756.80
G	103885.54	12.81	756.72	756.76
H	103895.54	12.81	756.67	756.72
I	103905.54	12.81	756.63	756.68
J	103915.54	12.81	756.59	756.63
K	103925.54	12.81	756.55	756.58
CL. BRG. PIER 2	103934.46	12.81	756.52	756.54
L	103944.46	12.81	756.49	756.52
M	103954.46	12.81	756.46	756.51
N	103964.46	12.81	756.44	756.50
O	103974.46	12.81	756.42	756.48
P	103984.46	12.81	756.40	756.45
CL. BRG. E. ABUT.	103993.46	12.81	756.39	756.41
CL. EXP. JT.	103994.17	12.81	756.39	756.41
BK. E. ABUT.	103995.75	12.81	756.39	756.41

BEAM 6

Location	Station	Offset	Theoretical Grade Elevations	Theoretical Grade Elevations Adjusted for Dead Load Deflection & Grinding
BK. W .ABUT.	103804.25	20.02	757.10	757.12
CL. EXP. JT.	103805.83	20.02	757.09	757.11
CL. BRG. W. ABUT.	103806.54	20.02	757.08	757.10
A	103816.54	20.02	757.01	757.05
B	103826.54	20.02	756.93	756.99
C	103836.54	20.02	756.86	756.93
D	103846.54	20.02	756.79	756.84
E	103856.54	20.02	756.73	756.77
CL. BRG. PIER 1	103865.54	20.02	756.68	756.70
F	103875.54	20.02	756.62	756.65
G	103885.54	20.02	756.57	756.61
H	103895.54	20.02	756.52	756.57
I	103905.54	20.02	756.48	756.53
J	103915.54	20.02	756.44	756.48
K	103925.54	20.02	756.40	756.43
CL. BRG. PIER 2	103934.46	20.02	756.37	756.39
L	103944.46	20.02	756.34	756.37
M	103954.46	20.02	756.31	756.36
N	103964.46	20.02	756.29	756.35
O	103974.46	20.02	756.27	756.33
P	103984.46	20.02	756.25	756.30
CL. BRG. E. ABUT.	103993.46	20.02	756.24	756.26
CL. EXP. JT.	103994.17	20.02	756.24	756.26
BK. E. ABUT.	103995.75	20.02	756.24	756.26

FILE NAME =	USER NAME =	DESIGNED - ___	REVISED ___	STATE OF ILLINOIS DEPARTMENT OF TRANSPORTATION	TOP OF SLAB ELEVATIONS STRUCTURE NO. 057 - 0125	F.A.I. RTE.	SECTION	COUNTY	TOTAL SHEETS	SHEET NO.
		CHECKED - ___	REVISED ___			74	(57-2)2BR-3	MCLEAN	___	___
	PLOT SCALE =	DRAWN - ___	REVISED ___					CONTRACT NO. 70672		
	PLOT DATE =	CHECKED - ___	REVISED ___		SHEET NO. 7 OF 24 SHEETS			ILLINOIS FED. AID PROJECT		

Figure 3.1.9-4

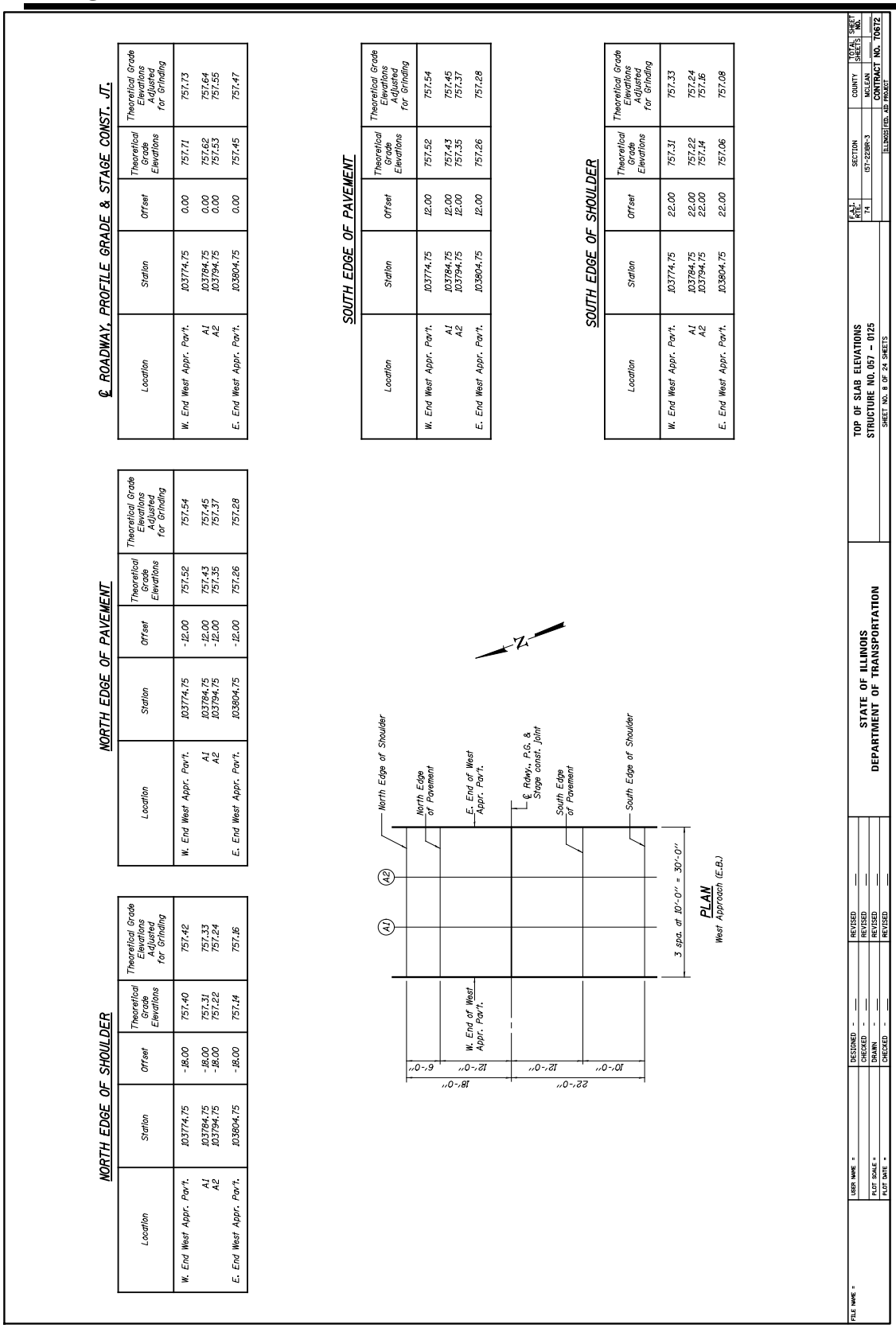
NORTH EDGE OF SHOULDER
Location | Station | Offset | Theoretical Grade Elevations | Theoretical Grade Elevations Adjusted for Grinding
W. End West Appr. Par't. | 103774.75 | -18.00 | 757.40 | 757.42
A1 | 103784.75 | -18.00 | 757.31 | 757.33
A2 | 103794.75 | -18.00 | 757.22 | 757.24
E. End West Appr. Par't. | 103804.75 | -18.00 | 757.14 | 757.16
NORTH EDGE OF PAVEMENT
Location | Station | Offset | Theoretical Grade Elevations | Theoretical Grade Elevations Adjusted for Grinding
W. End West Appr. Par't. | 103774.75 | -12.00 | 757.52 | 757.54
A1 | 103784.75 | -12.00 | 757.43 | 757.45
A2 | 103794.75 | -12.00 | 757.35 | 757.37
E. End West Appr. Par't. | 103804.75 | -12.00 | 757.26 | 757.28
℄ ROADWAY, PROFILE GRADE & STAGE CONST. JT.
Location | Station | Offset | Theoretical Grade Elevations | Theoretical Grade Elevations Adjusted for Grinding
W. End West Appr. Par't. | 103774.75 | 0.00 | 757.71 | 757.73
A1 | 103784.75 | 0.00 | 757.62 | 757.64
A2 | 103794.75 | 0.00 | 757.53 | 757.55
E. End West Appr. Par't. | 103804.75 | 0.00 | 757.45 | 757.47
SOUTH EDGE OF PAVEMENT
Location | Station | Offset | Theoretical Grade Elevations | Theoretical Grade Elevations Adjusted for Grinding
W. End West Appr. Par't. | 103774.75 | 12.00 | 757.52 | 757.54
A1 | 103784.75 | 12.00 | 757.43 | 757.45
A2 | 103794.75 | 12.00 | 757.35 | 757.37
E. End West Appr. Par't. | 103804.75 | 12.00 | 757.26 | 757.28
SOUTH EDGE OF SHOULDER
Location | Station | Offset | Theoretical Grade Elevations | Theoretical Grade Elevations Adjusted for Grinding
W. End West Appr. Par't. | 103774.75 | 22.00 | 757.31 | 757.33
A1 | 103784.75 | 22.00 | 757.22 | 757.24
A2 | 103794.75 | 22.00 | 757.14 | 757.16
E. End West Appr. Par't. | 103804.75 | 22.00 | 757.06 | 757.08
N
A1
A2
North Edge of Shoulder
North Edge of Pavement
E. End of West Appr. Par't.
℄ Rdwy., P.G. & Stage const. joint
South Edge of Pavement
South Edge of Shoulder
W. End of West Appr. Par't.
9'-0"
12'-0"
12'-0"
10'-0"
18'-0"
22'-0"
3 spa. at 10'-0" = 30'-0"
PLAN
West Approach (E.B.)
STATE OF ILLINOIS
DEPARTMENT OF TRANSPORTATION
TOP OF SLAB ELEVATIONS
STRUCTURE NO. 057 - 0125
SHEET NO. 8 OF 24 SHEETS
F.A.I. RTE. 74
SECTION 157-2BWR-3
COUNTY McLEAN
TOTAL SHEETS
SHEET NO.
CONTRACT NO. 70672
ILLINOIS FED. AID PROJECT
FILE NAME =
USER NAME =
PLOT SCALE =
PLOT DATE =
DESIGNED - -
CHECKED - -
DRAWN - -
CHECKED - -
REVISED
REVISED
REVISED
REVISED

Figure 3.1.9-5

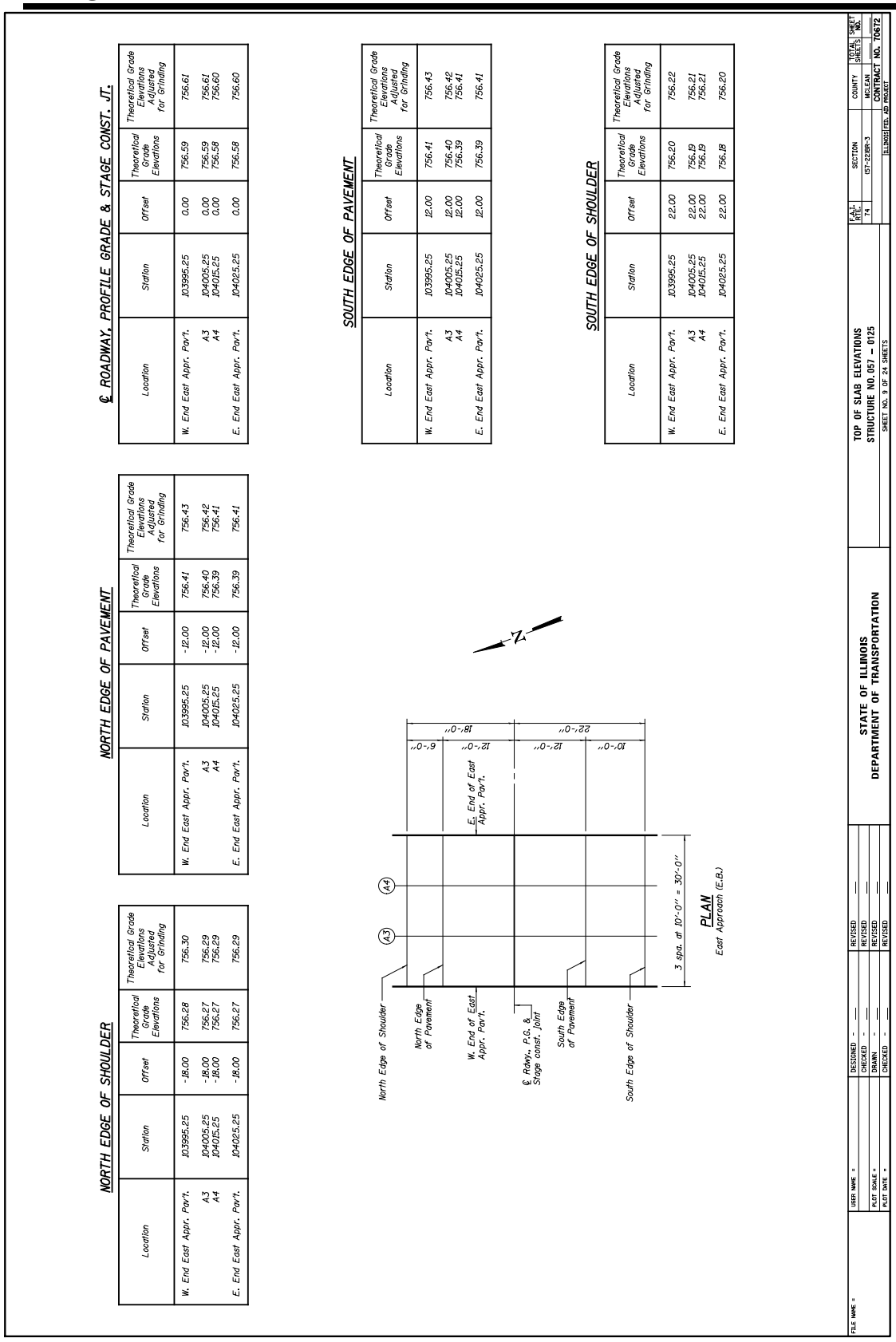
NORTH EDGE OF SHOULDER
Location | Station | Offset | Theoretical Grade Elevations | Theoretical Grade Elevations Adjusted for Grinding
W. End East Appr. Pav't. | 103995.25 | -18.00 | 756.28 | 756.30
A3 | 104005.25 | -18.00 | 756.27 | 756.29
A4 | 104015.25 | -18.00 | 756.27 | 756.29
E. End East Appr. Pav't. | 104025.25 | -18.00 | 756.27 | 756.29
NORTH EDGE OF PAVEMENT
Location | Station | Offset | Theoretical Grade Elevations | Theoretical Grade Elevations Adjusted for Grinding
W. End East Appr. Pav't. | 103995.25 | -12.00 | 756.41 | 756.43
A3 | 104005.25 | -12.00 | 756.40 | 756.42
A4 | 104015.25 | -12.00 | 756.39 | 756.41
E. End East Appr. Pav't. | 104025.25 | -12.00 | 756.39 | 756.41
℄ ROADWAY, PROFILE GRADE & STAGE CONST. JT.
Location | Station | Offset | Theoretical Grade Elevations | Theoretical Grade Elevations Adjusted for Grinding
W. End East Appr. Pav't. | 103995.25 | 0.00 | 756.59 | 756.61
A3 | 104005.25 | 0.00 | 756.59 | 756.61
A4 | 104015.25 | 0.00 | 756.58 | 756.60
E. End East Appr. Pav't. | 104025.25 | 0.00 | 756.58 | 756.60
SOUTH EDGE OF PAVEMENT
Location | Station | Offset | Theoretical Grade Elevations | Theoretical Grade Elevations Adjusted for Grinding
W. End East Appr. Pav't. | 103995.25 | 12.00 | 756.41 | 756.43
A3 | 104005.25 | 12.00 | 756.40 | 756.42
A4 | 104015.25 | 12.00 | 756.39 | 756.41
E. End East Appr. Pav't. | 104025.25 | 12.00 | 756.39 | 756.41
SOUTH EDGE OF SHOULDER
Location | Station | Offset | Theoretical Grade Elevations | Theoretical Grade Elevations Adjusted for Grinding
W. End East Appr. Pav't. | 103995.25 | 22.00 | 756.20 | 756.22
A3 | 104005.25 | 22.00 | 756.19 | 756.21
A4 | 104015.25 | 22.00 | 756.19 | 756.21
E. End East Appr. Pav't. | 104025.25 | 22.00 | 756.18 | 756.20
N
A3
A4
6'-0"
18'-0"
12'-0"
22'-0"
12'-0"
10'-0"
E. End of East Appr. Pav't.
North Edge of Shoulder
North Edge of Pavement
W. End of East Appr. Pav't.
℄ Rdwy., P.G. & Stage const. Joint
South Edge of Pavement
South Edge of Shoulder
3 spa. at 10'-0" = 30'-0"
PLAN
East Approach (E.B.)
STATE OF ILLINOIS
DEPARTMENT OF TRANSPORTATION
TOP OF SLAB ELEVATIONS
STRUCTURE NO. 057 - 0125
SHEET NO. 9 OF 24 SHEETS
F.A.I. RTE. 74
SECTION 57-2018R-3
COUNTY MCLEAN
TOTAL SHEETS
SHEET NO.
CONTRACT NO. 70672
ILLINOIS FED. AID PROJECT
FILE NAME =
USER NAME =
PLOT SCALE =
PLOT DATE =
DESIGNED - -
CHECKED - -
DRAWN - -
CHECKED - -
REVISED
REVISED
REVISED
REVISED

Figure 3.1.9-6

3.1.10 Designation of Roadway Crown on Plans

The plans shall clearly show the total crown and how the crown was obtained. For example, if the total crown is 3 in., show this total as well as that it was obtained by $\frac{3}{16}$ in. per ft. across a 12 ft. – 0 in. traffic lane and ¼ in. per ft. across a 3 ft. – 0 in. shoulder.

3.1.11 Boring Logs and Subsurface Data Profile Plot

The boring (and rock core) locations shall be shown on the plan view of the "General Plan and Elevation" sheet and shall be keyed by number to the boring logs such as "Boring No. 1, Boring No. 2, etc." The boring logs, rock core logs and Shelby Tube test results (which are included in the SGR) shall be included in the Final plans. The bottom of footing elevations should, if possible, be indicated on the appropriate boring log and identified as "Bottom of Footing-Pier No. 1, etc." Ground water elevations shown on the boring logs should state "Elevation at time boring was taken." The number of logs per sheet and size of each log should be selected such that a minimum total number of plan sheets are utilized. All lettering and numbers shall not be less than $\frac{1}{10}$ in. in height on a full size plan sheet or $\frac{1}{20}$ in. on a quarter-size plan sheet.

As an alternative, a subsurface data profile plot may be provided in place of boring logs and forms. A subsurface data profile plot is required to be provided in the SGR. It contains each soil boring, rock core and laboratory soils test plotted adjacent to each other in a continuous column (from ground surface to the bottom of boring or core) which is vertically to scale in elevation view. To maximize the number of borings per plan sheet, the borings should normally not be plotted to scale horizontally, but should follow the general sequence in station or offset along the longitudinal axis of the structure. When multiple plan sheets are required, the same vertical scale shall be used on each plan sheet.

3.1.12 Table of Moments and Shears

<u>LRFD and LFD</u>

To provide the reviewing agencies with a basis for checking the design and to provide ready information for future record or analysis, all detailed bridge plans shall present a table of moments

and shears. If possible, this table shall be shown on the structural framing sheet(s) of the plans. The controlling beam, interior or exterior, should be the beam shown on the plans.

LRFD

Figures 3.1.12-1, 3.1.12-2, 3.1.12-3, and 3.1.12-4 present suggested layouts of LRFD tables of moments and shears for straight steel beam superstructures (non-composite in negative moment regions), straight steel beam superstructures (composite in negative moment regions), curved steel beam superstructures, and PPC-I beam superstructures, respectively. The figures shown reference interior beams. If the exterior beam controls, the plans shall show the properties and applied loads for exterior beams and the plans should state this accordingly.

LFD

Figures 3.1.12-5, 3.1.12-6, and 3.1.12-7 present suggested layouts of LFD tables of moments and shears for straight steel beam superstructures, curved steel beam superstructures, and PPC-I beam superstructures, respectively. The figures shown reference interior beams. If the exterior beam controls, the plans shall show the properties and applied loads for exterior beams and the plans should state this accordingly.

Moment table - Symmetrical 2 span
(Composite in positive moment areas only)

INTERIOR GIRDER MOMENT TABLE			
		0.4 Sp. 1 or 0.6 Sp. 2	Pier
I_s	(in^4)		
$I_c(n)$	(in^4)		
$I_c(3n)$	(in^4)		
S_s	(in^3)		
$S_c(n)$	(in^3)		
$S_c(3n)$	(in^3)		
DC1	(k/')		
M_{DC1}	('k)		
DC2	(k/')		
M_{DC2}	('k)		
DW	(k/')		
M_{DW}	('k)		
M_{LL+IM}	('k)		
M_u (Strength I)	('k)		
$\phi_f M_n$	('k)		
f_s DC1	(ksi)		
f_s DC2	(ksi)		
f_s DW	(ksi)		
f_s (LL+IM)	(ksi)		
f_s (Service II)	(ksi)		
$0.95R_hF_{yf}$	(ksi)		
f_s (Total)(Strength I)	(ksi)		
$\phi_f F_n$	(ksi)		
V_f	(k)		

INTERIOR GIRDER REACTION TABLE			
		Abut.	Pier
R_{DC1}	(k)		
R_{DC2}	(k)		
R_{DW}	(k)		
R_{LL+IM}	(k)		
R_{Total}	(k)		

LRFD DESIGN
DATA TABLES
(NON-COMPOSITE IN
NEGATIVE MOMENT REGIONS)

Figure 3.1.12-1

Definitions for Figure 3.1.12-1:

I_s, S_s	Non-composite moment of inertia and section modulus of the steel section used for computing f_s (Total-Strength I, and Service II) due to non-composite dead loads (in.^{4} and in.^{3}).
$I_c(n)$, $S_c(n)$	Composite moment of inertia and section modulus of the steel and deck based upon the modular ratio, "n", used for computing f_s (Total-Strength I, and Service II) due to short-term composite live loads (in.^{4} and in.^{3}).
$I_c(3n)$, $S_c(3n)$	Composite moment of inertia and section modulus of the steel and deck based upon 3 times the modular ratio, "3n", used for computing f_s (Total-Strength I, and Service II) due to long-term composite (superimposed) dead loads (in.^{4} and in.^{3}).
DC1	Un-factored non-composite dead load (kips/ft.).
M_{DC1}	Un-factored moment due to non-composite dead load (kip-ft.).
DC2	Un-factored long-term composite (superimposed excluding future wearing surface) dead load (kips/ft.).
M_{DC2}	Un-factored moment due to long-term composite (superimposed excluding future wearing surface) dead load (kip-ft.).
DW	Un-factored long-term composite (superimposed future wearing surface only) dead load (kips/ft.).
M_{DW}	Un-factored moment due to long-term composite (superimposed future wearing surface only) dead load (kip-ft.).
M_{LL+IM}	Un-factored live load moment plus dynamic load allowance (impact) (kip-ft.).

M_u (Strength I)	Factored design moment (kip-ft.). $1.25(M_{DC1} + M_{DC2}) + 1.5M_{DW} + 1.75M_{LL+IM}$
$\phi_f M_n$	Compact composite positive moment capacity computed according to Article 6.10.7.1 or non-slender negative moment capacity according to Article A6.1.1 or A6.1.2 (kip-ft.).
f_s DC1:	Un-factored stress at edge of flange for controlling steel flange due to vertical non-composite dead loads as calculated below (ksi): M_{DC1} / S_{nc}
f_s DC2:	Un-factored stress at edge of flange for controlling steel flange due to vertical composite dead loads as calculated below (ksi): $M_{DC2} / S_c(3n)$ or $M_{DC2} / S_c(cr)$ as applicable
f_s DW:	Un-factored stress at edge of flange for controlling steel flange due to vertical composite future wearing surface loads as calculated below (ksi): $M_{DW} / S_c(3n)$ or $M_{DW} / S_c(cr)$ as applicable
f_s (LL+IM):	Un-factored stress at edge of flange for controlling steel flange due to vertical composite live load plus impact loads as calculated below (ksi): $M_{LL+IM} / S_c(n)$ or $M_{DW} / S_c(cr)$ as applicable
f_s (Service II):	Sum of stresses as computed below (ksi). f_s DC1 + f_s DC2 + f_s DW + 1.3 f_s (LL+IM)

$0.95R_hF_{yf}$:	Composite stress capacity for Service II loading according to Article 6.10.4.2 (ksi)
f_s (Total) (Strength I):	Sum of stresses as computed below on non-compact section (ksi).
	$1.25(f_s\ DC1 + f_s\ DC2) + 1.5f_s\ DW + 1.75f_s\ (LL+IM)$
$\phi_f F_n$:	Non-compact composite positive or negative stress capacity for Strength I loading according to Article 6.10.7 or 6.10.8 (ksi).
V_f	Maximum factored shear range in span computed according to Article 6.10.10.

Note:

M_{LL} and R_{LL} include the effects of centrifugal force and superelevation.

Moment table - Symmetrical composite 2 span
(Composite in positive and negative moment areas)

INTERIOR GIRDER MOMENT TABLE			
		0.4 Sp. 1 or 0.6 Sp. 2	Pier
I_s	(in^4)		
$I_c(n)$	(in^4)		
$I_c(3n)$	(in^4)		
$I_c(cr)$	(in^4)		
S_s	(in^3)		
$S_c(n)$	(in^3)		
$S_c(3n)$	(in^3)		
$S_c(cr)$	(in^3)		
DC1	(k/')		
M_{DC1}	('k)		
DC2	(k/')		
M_{DC2}	('k)		
DW	(k/')		
M_{DW}	('k)		
M_{LL+IM}	('k)		
M_u (Strength I)	('k)		
$\phi_f M_n$	('k)		
f_s DC1	(ksi)		
f_s DC2	(ksi)		
f_s DW	(ksi)		
f_s (LL+IM)	(ksi)		
f_s (Service II)	(ksi)		
$0.95R_hF_{yf}$	(ksi)		
f_s (Total)(Strength I)	(ksi)		
$\phi_f F_n$	(ksi)		
V_f	(k)		

INTERIOR GIRDER REACTION TABLE			
		Abut.	Pier
R_{DC1}	(k)		
R_{DC2}	(k)		
R_{DW}	(k)		
R_{LL+IM}	(k)		
R_{Total}	(k)		

LRFD DESIGN
DATA TABLES
(COMPOSITE IN NEGATIVE
MOMENT REGIONS)

Figure 3.1.12-2

Definitions for Figure 3.1.12-2:

I_s, S_s	Non-composite moment of inertia and section modulus of the steel section used for computing f_s (Total-Strength I, and Service II) due to non-composite dead loads (in.^{4} and in.^{3}).
$I_c(n)$, $S_c(n)$	Composite moment of inertia and section modulus of the steel and deck based upon the modular ratio, "n", used for computing f_s (Total-Strength I, and Service II) in uncracked sections due to short-term composite live loads (in.^{4} and in.^{3}).
$I_c(3n)$, $S_c(3n)$	Composite moment of inertia and section modulus of the steel and deck based upon 3 times the modular ratio, "3n", used for computing f_s (Total-Strength I, and Service II) in uncracked sections due to long-term composite (superimposed) dead loads (in.^{4} and in.^{3}).
$I_c(cr)$, $S_c(cr)$	Composite moment of inertia and section modulus of the steel and longitudinal deck reinforcement, used for computing f_s (Total-Strength I, and Service II) in cracked sections, due to both short-term composite live loads and long-term composite (superimposed) dead loads (in.^{4} and in.^{3}).
DC1	Un-factored non-composite dead load (kips/ft.).
M_{DC1}	Un-factored moment due to non-composite dead load (kip-ft.).
DC2	Un-factored long-term composite (superimposed excluding future wearing surface) dead load (kips/ft.).
M_{DC2}	Un-factored moment due to long-term composite (superimposed excluding future wearing surface) dead load (kip-ft.).
DW	Un-factored long-term composite (superimposed future wearing surface only) dead load (kips/ft.).

M_{DW}	Un-factored moment due to long-term composite (superimposed future wearing surface only) dead load (kip-ft.).
M_{LL+IM}	Un-factored live load moment plus dynamic load allowance (impact) (kip-ft.).
M_u (Strength I)	Factored design moment (kip-ft.).
	$1.25(M_{DC1} + M_{DC2}) + 1.5M_{DW} + 1.75M_{LL+IM}$
$\phi_f M_n$:	Compact composite positive moment capacity computed according to Article 6.10.7.1 or non-slender negative moment capacity according to Article A6.1.1 or A6.1.2 (kip-ft.).
f_s DC1:	Un-factored stress at edge of flange for controlling steel flange due to vertical non-composite dead loads as calculated below (ksi):
	M_{DC1} / S_{nc}
f_s DC2:	Un-factored stress at edge of flange for controlling steel flange due to vertical composite dead loads as calculated below (ksi):
	$M_{DC2} / S_c(3n)$ or $M_{DC2} / S_c(cr)$ as applicable
f_s DW:	Un-factored stress at edge of flange for controlling steel flange due to vertical composite future wearing surface loads as calculated below (ksi):
	$M_{DW} / S_c(3n)$ or $M_{DW} / S_c(cr)$ as applicable
f_s (LL+IM):	Un-factored stress at edge of flange for controlling steel flange due to vertical composite live load plus impact loads as calculated below (ksi):

	M_{LL+IM} / $S_c(n)$ or M_{DW} / $S_c(cr)$ as applicable
f_s (Service II):	Sum of stresses as computed below (ksi).
	f_s DC1 + f_s DC2 + f_s DW + 1.3 f_s (LL+IM)
$0.95R_hF_{yf}$:	Composite stress capacity for Service II loading according to Article 6.10.4.2 (ksi)
f_s (Total) (Strength I):	Sum of stresses as computed below on non-compact section (ksi).
	1.25(f_s DC1 + f_s DC2) + 1.5f_s DW + 1.75f_s (LL+IM)
$\phi_f F_n$:	Non-compact composite positive or negative stress capacity for Strength I loading according to Article 6.10.7 or 6.10.8 (ksi).
V_f	Maximum factored shear range in span computed according to Article 6.10.10.

Note:

M_{LL} and R_{LL} include the effects of centrifugal force and superelevation.

Moment table - Unsymmetrical composite 2 span curved

INTERIOR GIRDER MOMENT TABLE				
		0.4 Sp. 1	Pier	0.6 Sp. 2
I_s	(in^4)			
$I_c(n)$	(in^4)			
$I_c(3n)$	(in^4)			
$I_c(cr)$	(in^4)			
S_s	(in^3)			
$S_c(n)$	(in^3)			
$S_c(3n)$	(in^3)			
$S_c(cr)$	(in^3)			
S_{xc}	(in^3)			
DC1	(k/')			
M_{DC1}	('k)			
DC2	(k/')			
M_{DC2}	('k)			
DW	(k/')			
M_{DW}	('k)			
M_{LL+IM}	('k)			
f_ℓ (Strength I)	('k)			
$M_u + \frac{1}{3} f_\ell S_{xc}$	('k)			
$\phi_f M_n$	('k)			
f_s DC1	(ksi)			
f_s DC2	(ksi)			
f_s DW	(ksi)			
f_s (LL+IM)	(ksi)			
f_ℓ (Service II)	(ksi)			
$f_s + f_\ell/2$ (Service II)	(ksi)			
$0.95R_hF_{yf}$	(ksi)			
$f_s + f_\ell/3$ (Total)(Strength I)	(ksi)			
$\phi_f F_n$	(ksi)			
V_f	(k)			

INTERIOR GIRDER REACTION TABLE				
		N. Abut.	Pier	S. Abut.
R_{DC1}	(k)			
R_{DC2}	(k)			
R_{DW}	(k)			
R_{LL+IM}	(k)			
R_{Total}	(k)			

LRFD DESIGN
DATA TABLES FOR
CURVED GIRDERS

Figure 3.1.12-3

Definitions for Figure 3.1.12-3:

I_s, S_s	Non-composite moment of inertia and section modulus of the steel section used for computing f_s (Total-Strength I, and Service II) due to non-composite dead loads (in.^{4} and in.^{3}).
$I_c(n)$, $S_c(n)$	Composite moment of inertia and section modulus of the steel and deck based upon the modular ratio, "n", used for computing f_s (Total-Strength I, and Service II) in uncracked sections due to short-term composite live loads (in.^{4} and in.^{3}).
$I_c(3n)$, $S_c(3n)$	Composite moment of inertia and section modulus of the steel and deck based upon 3 times the modular ratio, "3n", used for computing f_s (Total-Strength I, and Service II) in uncracked sections due to long-term composite (superimposed) dead loads (in.^{4} and in.^{3}).
$I_c(cr)$, $S_c(cr)$	Composite moment of inertia and section modulus of the steel and longitudinal deck reinforcement, used for computing f_s (Total-Strength I, and Service II) in cracked sections, due to both short-term composite live loads and long-term composite (superimposed) dead loads (in.^{4} and in.^{3}).
S_{xc}	Section modulus about the major axis of section to the controlling flange, tension or compression, taken as yield moment with respect to the controlling flange over the yield strength of the controlling flange (in.^{3}).
DC1	Un-factored non-composite dead load (kips/ft.).
M_{DC1}	Un-factored moment due to non-composite dead load (kip-ft.).
DC2	Un-factored long-term composite (superimposed excluding future wearing surface) dead load (kips/ft.).

M_{DC2}	Un-factored moment due to long-term composite (superimposed excluding future wearing surface) dead load (kip-ft.).
DW	Un-factored long-term composite (superimposed future wearing surface only) dead load (kips/ft.).
M_{DW}	Un-factored moment due to long-term composite (superimposed future wearing surface only) dead load (kip-ft.).
M_{LL+IM}	Un-factored live load moment plus dynamic load allowance (impact) (kip-ft.).
M_u (Strength I)	Factored design moment (kip-ft.).
	$1.25(M_{DC1} + M_{DC2}) + 1.5M_{DW} + 1.75M_{LL+IM}$
f_l	Factored calculated normal stress at edge of flange for controlling flange plate due to lateral bending, Strength I or Service II as applicable (kip-ft.).
$\phi_f M_n$:	Factored resistance available according to A6.1.1 (kips).
f_s DC1:	Un-factored stress at edge of flange for controlling steel flange due to vertical non-composite dead loads as calculated below (ksi):
	M_{DC1} / S_{nc}
f_s DC2:	Un-factored stress at edge of flange for controlling steel flange due to vertical composite dead loads as calculated below (ksi):
	$M_{DC2} / S_c(3n)$ or $M_{DC2} / S_c(cr)$ as applicable

f_s DW:	Un-factored stress at edge of flange for controlling steel flange due to vertical composite future wearing surface loads as calculated below (ksi): M_{DW} / S_c(3n) or M_{DW} / S_c(cr) as applicable
f_s (LL+IM):	Un-factored stress at edge of flange for controlling steel flange due to vertical composite live load plus impact loads as calculated below (ksi): M_{LL+IM} / S_c(n) or M_{DW} / S_c(cr) as applicable
$f_s + f_l/2$ (Service II):	Sum of stresses as computed from the moments below (ksi). f_s DC1 + f_s DC2 + f_s DW + 1.3f_s (LL+IM) + $f_l/2$
$0.95R_hF_{yf}$:	Composite stress capacity for Service II loading according to Article 6.10.4.2 (ksi)
$f_s + f_l/3$ (Total) (Strength I):	Sum of stresses as computed from the moments below on non-compact section (ksi). 1.25(f_s DC1 + f_s DC2) + 1.5f_s DW + 1.75f_s (LL+IM) + $f_l/3$
$\phi_f F_n$:	Non-compact composite positive or negative stress capacity for Strength I loading according to Article 6.10.7 or 6.10.8 (ksi).
V_f	Maximum factored shear range in span computed according to Article 6.10.10.

Note:

M_{LL} and R_{LL} include the effects of centrifugal force and superelevation.

Moment table - Symmetrical 3 span PPC-I beam

INTERIOR BEAM MOMENT TABLE			
	0.4 Sp. 1 0.6 Sp. 3	Pier 1 or 2	0.5 Sp. 2
I (in^4)			
I' (in^4)			
S_b (in^3)			
S_b' (in^3)			
S_t (in^3)			
S_t' (in^3)			
DC1 (k/')			
M_{DC1} ('k)			
DC2 (k/')			
M_{DC2} ('k)			
DW (k/')			
M_{DW} ('k)			
M_{LL+IM} ('k)			

	INTERIOR BEAM REACTION TABLE			
		Abut.	Pier 1 Span 1 Pier 2 Span 3	Pier 1 Span 2 Pier 2 Span 2
	R_{DC1} (k)			
*	R_{DC2} (k)			
*	R_{DW} (k)			
*	R_{LL+IM} (k)			
	R_{Total} (k)			

* At continuous piers, reactions from composite loads are assumed to be equally distributed to each bearing line.

See Section 3.7.1.4 for guidance on elastomeric bearing design at continuous piers

LRFD PPC I-BEAM
DESIGN DATA TABLES

Figure 3.1.12-4

Definitions for Figure 3.1.12-4:

I	Non-composite moment of inertia of beam section (in.^{4}).
I'	Composite moment of inertia of beam section (in.^{4}).
S_b	Non-composite section modulus for the bottom fiber of the prestressed beam (in.^{3}).
S_b'	Composite section modulus for the bottom fiber of the prestressed beam (in.^{3}).
S_t	Non-composite section modulus for the top fiber of the prestressed beam (in.^{3}).
S_t'	Composite section modulus for the top fiber of the prestressed beam (in.^{3}).
DC1	Un-factored non-composite dead load (kips/ft.).
M_{DC1}	Un-factored moment due to non-composite dead load (kip-ft.).
DC2	Un-factored long-term composite (superimposed excluding future wearing surface) dead load (kips/ft.).
M_{DC2}	Un-factored moment due to long-term composite (superimposed excluding future wearing surface) dead load (kip-ft.).
DW	Un-factored long-term composite (superimposed future wearing surface only) dead load (kips/ft.).
M_{DW}	Un-factored moment due to long-term composite (superimposed future wearing surface only) dead load (kip-ft.).
M_{LL+IM}	Un-factored live load moment plus dynamic load allowance (impact) (kip-ft.).

MOMENT TABLE- Symmetrical composite 2 span
(Composite in positive moment area only)

	INTERIOR GIRDER MOMENT TABLE		
		0.4 Sp. 1 or 0.6 Sp. 2	Pier
	I_s (in^4)		
	$I_c(n)$ (in^4)		
	$I_c(3n)$ (in^4)		
	S_s (in^3)		
	$S_c(n)$ (in^3)		
	$S_c(3n)$ (in^3)		
	Z (in^3)		
	D (k/')		
	M_D ('k)		
	s_D (k/')		
	M_{sD} ('k)		
	M_L ('k)		
	M_I ('k)		
	$\frac{5}{3}[M_{L+I}]$ ('k)		
	M_a ('k)		
*	M_u ('k)		
	f_s D non-comp (ksi)		
	f_s D (comp) (ksi)		
	f_s $\frac{5}{3}[M_L + M_I]$ (ksi)		
	f_s (Overload) (ksi)		
**	f_s (Total) (ksi)		
	VR (k)		

INTERIOR GIRDER REACTION TABLE		
	Abut.	Pier
R_D (k)		
R_L (k)		
R_I (k)		
R_{Total} (k)		

* Compact section
** Braced non-compact and partially braced section

LOAD FACTOR
DESIGN DATA TABLES

Figure 3.1.12-5

Definitions for Figure 3.1.12-5:

I_s, S_s	Non-composite moment of inertia and section modulus of the steel section used for computing f_s (Total and Overload) due to non-composite dead loads (in.^{4} and in.^{3}).
$I_c(n)$, $S_c(n)$	Composite moment of inertia and section modulus of the steel and deck based upon the modular ratio, "n", used for computing f_s (Total and Overload) due to short-term composite live loads (in.^{4} and in.^{3}).
$I_c(3n)$, $S_c(3n)$	Composite moment of inertia and section modulus of the steel and deck based upon 3 times the modular ratio, "3n", used for computing f_s (Total and Overload) due to long-term composite (superimposed) dead loads (in.^{4} and in.^{3}).
Z	Plastic Section Modulus of the steel section in non-composite areas. Omit line in Moment Table if not used in design calculations (in.^{3}).
DL	Un-factored non-composite dead load (kips/ft.).
M_{DL}	Un-factored moment due to non-composite dead load (kip-ft.).
s_{DL}	Un-factored long-term composite (superimposed) dead load (kips/ft.).
M_{SDL}	Un-factored moment due to long-term composite (superimposed) dead load (kip-ft.).
M_{LL}	Un-factored live load moment (kip-ft.).
M_I	Un-factored moment due to impact (kip-ft.).
M_a	Factored design moment (kip-ft.).
	$1.3[M_{DL} + M_{SDL} + 5/3(M_{LL} + M_I)]$

M_u	Compact composite moment capacity according to AASHTO LFD 10.50.1.1 or compact non-composite moment capacity according to AASHTO LFD 10.48.1 (kip-ft.).
f_s(Overload)	Sum of stresses as computed from the moments below (ksi). $M_{DL} + M_{SDL} + 5/3(M_{LL} + M_I)$
f_s(Total)	Sum of stresses as computed from the moments below on non-compact section (ksi). $1.3[M_{DL} + M_{SDL} + 5/3(M_{LL} + M_I)]$
VR	Maximum LL + impact shear range within the composite portion of the span for stud shear connector design (kips).

MOMENT TABLE - Unsymmetrical Composite 2 Span Curved

INTERIOR GIRDER MOMENT TABLE				
		0.4 Sp. 1	Pier	0.6 Sp. 2
I_s	(in^4)			
$I_c(n)$	(in^4)			
$I_c(3n)$	(in^4)			
S_s	(in^3)			
$S_c(n)$	(in^3)			
$S_c(3n)$	(in^3)			
S_ℓ	(in^3)			
$\mathbb{P}$	(k/')			
$M\mathbb{P}$	('k)			
$s\mathbb{P}$	(k/')			
$M_s\mathbb{P}$	('k)			
$M\mathbb{L}$	('k)			
M_I	('k)			
$\frac{5}{3}[M\mathbb{L} + M_I]$	('k)			
M_a	('k)			
$M_{b\ell}$	('k)			
$f_s\mathbb{P}$ (non-comp)	(ksi)			
$f_s\mathbb{P}$ (comp)	(ksi)			
f_s $\frac{5}{3}[M\mathbb{L} + M_I]$	(ksi)			
f_ℓ	(ksi)			
f_s (Overload)	(ksi)			
f_s (Total)	(ksi)			
F_{cr} (Overload)	(ksi)			
VR	(k)			
F_{cr}	(ksi)			

INTERIOR GIRDER REACTION TABLE				
		N. Abut.	Pier	S. Abut.
$R\mathbb{P}$	(k)			
$R\mathbb{L}$	(k)			
R_I	(k)			
R_{Total}	(k)			

LOAD FACTOR
DESIGN DATA TABLES
FOR CURVED GIRDERS

Figure 3.1.12-6

Definitions for Figure 3.1.12-6:

I_s, S_s	Non-composite moment of inertia and section modulus of the steel section used for computing f_s (Total and Overload) due to non-composite dead loads (in.^{4} and in.^{3}).
$I_c(n)$, $S_c(n)$	Composite moment of inertia and section modulus of the steel and deck based upon the modular ratio, "n", used for computing f_s (Total and Overload) due to short-term composite live loads (in.^{4} and in.^{3}).
$I_c(3n)$, $S_c(3n)$	Composite moment of inertia and section modulus of the steel and deck based upon 3 times the modular ratio, "3n", used for computing f_s (Total and Overload) due to long-term composite (superimposed) dead loads (in.^{4} and in.^{3}).
S_l	Section modulus of one flange plate for lateral flange bending (in.^{3}).
DL	Un-factored non-composite dead load (kips/ft.).
M_{DL}	Un-factored moment due to non-composite dead load (kip-ft.).
s_{DL}	Un-factored long-term composite (superimposed) dead load (kips/ft.).
M_{SDL}	Un-factored moment due to long-term composite (superimposed) dead load (kip-ft.).
M_{LL}	Un-factored live load moment (kip-ft.).
M_I	Un-factored moment due to impact (kip-ft.).
M_a	Factored design moment (kip-ft.).
	$1.3[M_{DL} + M_{SDL} + 5/3(M_{LL} + M_I)]$
M_{bl}	Factored lateral bending moment for flange plate (kip-ft.).

f_l Factored calculated normal stress at the edge of flange due to lateral bending (ksi).

f_s(Overload) Sum of stresses as computed from the moments below (ksi).

$M_{DL} + M_{SDL} + 5/3(M_{LL} + M_l)$

f_s(Total) Sum of stresses as computed from the moments below (ksi).

$1.3[M_{DL} + M_{SDL} + 5/3(M_{LL} + M_l)]$

F_{cr}(Overload) Critical average flange stress at overload computed according to the 2003 AASHTO Guide Specifications for Horizontally Curved Steel Girder Highway Bridges Section 9.5 (ksi).

F_{cr} Critical average flange stress (smaller of F_{cr1} or F_{cr2} for partially braced flanges and F_y for continuously braced flanges) computed according to the 2003 AASHTO Guide Specifications for Horizontally Curved Steel Girder Highway Bridges (Sections 5.2, 5.3 and 5.4) (ksi).

VR Maximum LL + impact shear range within span for stud shear connector design (kips).

Note:

M_{LL} and R_{LL} include the effects of centrifugal force and superelevation.

MOMENT TABLE - Symmetrical 3 Span PPC I-Beam

INTERIOR BEAM MOMENT TABLE				
		0.4 Sp. 1 0.6 Sp. 3	Pier 1 or 2	0.5 Sp. 2
I	(in^4)			
I'	(in^4)			
S_b	(in^3)			
S_b'	(in^3)			
S_t	(in^3)			
S_t'	(in^3)			
DL	$(k/')$			
M_{DL}	$('k)$			
s_{DL}	$(k/')$			
$M_{s\,DL}$	$('k)$			
M_{LL}	$('k)$			
M_I	$('k)$			

	INTERIOR BEAM REACTION TABLE				
			Abut.	Pier 1 Span 1 Pier 2 Span 3	Pier 1 Span 2 Pier 2 Span 2
	R_{DL}	(k)			
*	$R_{s\,DL}$	(k)			
*	R_{LL}	(k)			
*	R_I	(k)			
	R_{Total}	(k)			

* At continuous piers, reactions from composite loads are assumed to be equally distributed to each bearing line.

See Section 3.7.1.4 for guidance on elastomeric bearing design at continuous piers.

PPC I-BEAM
LOAD FACTOR
DESIGN DATA TABLES

Figure 3.1.12-7

Definitions for Figure 3.1.12-7:

I	Non-composite moment of inertia of beam section (in.^{4}).
I'	Composite moment of inertia of beam section (in.^{4}).
S_b	Non-composite section modulus for the bottom fiber of the prestressed beam (in.^{3}).
S_b'	Composite section modulus for the bottom fiber of the prestressed beam (in.^{3}).
S_t	Non-composite section modulus for the top fiber of the prestressed beam (in.^{3}).
S_t'	Composite section modulus for the top fiber of the prestressed beam (in.^{3}).
DL	Un-factored non-composite dead load (kips/ft.).
M_{DL}	Un-factored moment due to non-composite dead load conservatively taken at 0.5 of the span (kip-ft.).
s_{DL}	Un-factored long-term composite (superimposed) dead load (kips/ft.).
M_{SDL}	Un-factored moment due to long-term composite (superimposed) dead load (kip-ft.).
M_{LL}	Un-factored live load moment on the composite section (kip-ft.).
M_I	Un-factored moment due to impact on the composite section (kip-ft.).

3.1.13 Checklist for Use in Final Plan Preparation

The checklist below is provided as an aid to the designer when completing a set of Contract plans. The checklist of items below is provided for guidance and is not all inclusive. The designer and checker shall supplement this checklist with additional material appropriate for the specific project in order to ensure quality plans and contract documents. Referenced figures and sections are included in the Bridge Manual unless otherwise indicated.

General

1. The Plans, Standard Specifications, Supplemental Specifications, Recurring Special Provisions and contract-specific Special Provisions form the contract documents. It is the responsibility of the designer to produce structure plans and contract documents which are free from errors, omissions, and ambiguities which may result in misinterpretation.
2. Plans depict the scope of work graphically. Generally, they define overall extent, locations, dimensions, materials, methods and quantity considerations. Specifications describe the quality and capacity of material and equipment, the installation methods and techniques and the results to be achieved. Requirements should be defined in only one place. If special emphasis is necessary, item requirements may be defined by Special Provisions and shown on the plans.
3. To become familiar with the project, the designer should review the previous pertinent correspondence, Structure Report, Hydraulic Report, and Structure Geotechnical Report (SGR). When portions of an existing structure will be incorporated and/or construction will be staged, the Bridge Condition Report (BCR), existing Shop Drawings, if any, and the existing Structure plans should also be reviewed.
4. For each project, the consultant's performance will be evaluated for timeliness in meeting Departmental schedules, cooperation, coordination, quality and adequacy of structural design; quality, clarity and accuracy of Structure plans and Special Provisions; extent of corrections noted by Department reviewers or in construction; and initiative in identifying and addressing special and/or key design issues.
5. For Structure plans prepared by consultants, the design consultant firm name should be included on all sheets. See CADD Structures Drafting Reference Guide.
6. The contract number should be included in the lower right corner of all plan sheets in the contract. The structure number should be included in the title block of all Structure plan sheets.

General Plan and Elevation (GP&E)

1. Check conformance with the approved TSL plan and verify that all pertinent information on the TSL is included on the GP&E sheet except the following shall be excluded:
    a. Bridge omission.
    b. Cross section, section thru abutment, pier sketch, etc.
    c. Roadway data (highway classification).
2. Confirm indication of the Bridge Approach Slab.
3. Show name plate lettering and location of name plate on structure (two if dual structures). If it is a rehabilitation project where a portion of the existing structure is being reused, add note about relocating the existing name plate. See Figures 3.17-1 through 3.17-3.
4. Include all applicable general notes as found in Section 3.1.3, and as required for the specific project.
    a. Coordinate with District and specify appropriate type of paint system and Munsell number.
    b. Specify method of cleaning existing structural steel and applicable cautions for associated hazards.
    c. Specify methods and/or material for concrete repair (cast-in-place or prestressed) and address quantity and/or location variations. For further guidance, refer to the Repairs section of the IDOT Structural Services Manual.
5. Total Bill of Material :
    a. Coded pay items shall be used wherever possible.
    b. Verify that non-coded pay items are properly covered by Special Provisions.
    c. Verify that all needed pay items are in the Bill of Materials and add any which are missing.
    d. Any contract-required services or items not included in a pay item description shall be indicated as included in another specific pay item.
    e. Do not make an item “incidental to contract”.
    f. Roadway items not detailed in Structure plans should be listed in Roadway Bill of Materials and not the Structure Bill of Materials.
6. Show slopewall details. See Figures 3.14.4.1-1 through 3.14.4.1-3, 3.14.4.2-1 and 3.14.5-1.
7. Show riprap placement details.

8. Location of temporary sheet piling or soil retention system shall be shown (details should be on stage construction detail sheet).
9. Show Stage Construction Line, if applicable. Note which is Stage I Construction and which is Stage II Construction.
10. Show foundation type and required elevations.
11. Do not show structure excavation.
12. Index of sheets.
13. Affix structural seal with signature and expiration date on GP&E sheet of all structures and leave room for the State Bridge Engineer's approval stamp and signature in lower portion of sheet.
14. Include design stresses. For steel structures give F_y of steel grade(s) specified and indicate the grade(s) used for the primary structural members.
15. Show location, type and owner of utilities and drainage structures (in-ground, on existing structure or overhead) that directly affect construction. Include existing sewers, culverts, etc.
16. Show waterway information table, if applicable.
17. Show design scour elevation table, if applicable.
18. If the GP&E sheet becomes too crowded, provide a "General Data" sheet for General Notes, Total Bill of Materials, and other miscellaneous details as needed. See Section 3.1.6 for guidance.

Footing Layout, Stage Construction Details, Etc.

1. For dual structures, structures crossing navigable waterways, single structures on curved alignments, or other unusual situations, show footing layout. See Figures 3.1.8-1 through 3.1.8-3.
2. Include sketches showing the stage removal and stage construction of the structure, and limits of removal of substructure elements not reconstructed. Generally, show elevation views for each removal and construction stage. For example: Stage I Removal; Stage I Construction; Stage II Removal; Stage II Construction. If the stage removal and stage construction lines are different for the superstructure and substructure, add a note on this sheet to alert the contractor.
3. Show location of temporary concrete barrier and temporary bridge rail. Use of temporary bridge rail should be limited to existing portion of the deck. Utilize the Standard Base Sheets R-25 and R-27.

4. Indicate how the cost of non-standard items (e.g. removal of existing bridge rail, temporary support of existing utilities, or removal and delivery of items salvaged for the Department) is accounted for by notes or Special Provisions.
5. Show detail of partial and full depth deck patching where applicable. See also IDOT document "Bridge Condition Report Procedures and Practices" (available online).
6. Show a suggested sequence of construction when necessary.
7. Show the limits of soil retention system or temporary sheet piling. See Bridge Manual Section 3.13.

Deck Elevations

1. Include fillet (haunch) details and associated notes. See Figure 3.2.4-11 or Figure 3.2.4-12.
2. Dead load deflection diagram includes deflections due to dead load of the concrete deck and all initial superimposed dead loads, i.e. parapet, sidewalk, median. It does not include girders, structural steel bracing, temporary forms, or future wearing surface. Show calculated deflections to the nearest ⅛ in. (0.01 ft.). See Section 3.1.9.
3. Layout of elevation lines and substructure lines as shown in tables for bridges with steel or PPC I-beams. See Section 3.1.9.
4. Layout of elevation lines for slab bridges according to Section 3.1.9, if required.
5. Layout for bridge approach slabs. See Section 3.1.9.
6. Show stationing, top of deck elevations and offsets to the nearest 0.01 ft.
7. Use similar lettering size (match the smallest as a minimum) for numbers in elevation tables as is used for lettering on elevation sheets.

Deck Details

1. Cross Section.
    a. Show the cross sectional dimensions and bar locations as in the Standard Base Sheets.
    b. Show location of longitudinal construction joints, if applicable.
    c. Show crown, total drop, bar clearance, slab thickness, location of profile grade line, and stage construction line/joint, if applicable.
2. Plan.

a. Design the area of the main reinforcement and distribution of steel in accordance with Sections 3.2.1, 3.2.2 and 3.2.3.
b. Top and bottom mat reinforcement shall be lapped at different locations. See Sections 3.1.4 and 3.2.2.
c. Specify minimum lap lengths for specific bars or by bar size, as applicable.
d. Show top transverse bars in the slab under the curb or parapet lapped with transverse bars at the top of the slab. See Section 3.2.4.
e. The section location(s) for expansion joint details at the end(s) of the slab shall be shown.
f. Show North arrow.
g. Locate parapet joints.
h. Locate drains and scuppers and additional reinforcement.
i. Locate light poles on structure, if applicable.

3. See Section 3.2.8 for deck pouring sequence. If required, the pouring sequence shall be shown on the plans.
4. Show expansion joint opening requirements. See Section 3.6. Expansion joint details are shown on separate sheets.
5. Show floor drains and/or drainage scupper details. See Figures 3.2.9-1 through 3.2.9-9, and corresponding Base Sheets.
6. On stage construction jobs, check dimensions, stage designations, bar call-outs, bar splicers, etc. See Base Sheet BSD-1.

Approach Slab Details

1. Plan.
   a. Show North arrow
   b. Show centerline of roadway and local tangent.
   c. Show stations and offsets at beginning and end of approach slab.
   d. Show transverse bar splicers for stage construction in both the slab and footing.
2. Show correct details for flexible vs. rigid pavement connector.
3. Cross Section.
   a. Show the cross sectional dimensions and bar locations as in the Standard Base Sheets.
   b. Show location of longitudinal construction joints, if applicable.
   c. Show crown, total drop, bar clearance, slab thickness, location of profile grade line, and stage construction line/joint, if applicable.

4. Show parapet joint details, if applicable.
5. Show end of parapet treatment, if applicable.

Bridge Railing Details

1. Show parapet details. See Section 3.2.4.
    a. Show Mandatory Construction Joint at top of slab and optional joint at curb.
    b. Show aluminum plate and cork joint filler parapet joint details and locations.
    c. Show end of parapet details for expansion joint treatment or approach rail attachment.

Framing Plan and Beam/Girder Details

1. A framing plan for steel layout shall include:
    a. Beam/girder numbering, spacing, and lengths.
    b. Diaphragm/cross frame type and locations. See Sections 3.3.22 and 3.3.23.
    c. If curved, a local tangent, table of layout dimensions and offset diagram explaining offsets. See Figure 3.3.17-1.
    d. Location of field splice(s).
    e. North arrow.
2. The steel beams/girders shall be designed per the requirements of the applicable (LRFD or LFD) AASHTO Specifications and Section 3.3 of the Bridge Manual.
    a. Beam or girder design shall be based on strength, economy, durability, maintainability and constructibility.
    b. Show Moment and Reaction Tables and Definitions. See Figures 3.1.12-1, 3.1.12-2, 3.1.12-4, and 3.1.12-5.
    c. Show weld sizes, flange transition locations*, shear stud layout and details, notch toughness or fracture critical notations, diaphragm/cross frame details, bolted field splice design and details. (*welded flange transition details are covered by the AASHTO/AWS D1.5 Bridge Welding Code and are not needed on the Design plans.)
    d. Steel other than Grade 36 shall be identified by label or note on each steel details sheet. The material normally selected for primary steel members is Grade 50. For diaphragms, cross frames, and connecting plates or angles on straight painted structures, the default is Grade 36 when non-weathering Grade 50 steel is used for primary members. When the material selected for primary steel members is

Grade 50 weathering steel, diaphragms, cross frames, and connecting plates or angles shall also be Grade 50 weathering steel. See Sections 2.3.6.1.2 and 3.3.4.

e. Provide a table of Top of Web (or Top of Beam for WF) elevations. Add note under table: "For fabrication only". These are used for shop-drilling splices with the steel supported, so they include no dead load deflection.

f. When a girder is cambered, a diagram is required. See Section 3.3.12. A girder segment (between field splices or between a splice and a free end) with a maximum potential calculated camber less than ¾ in. should be detailed straight, and associated substructure seat elevations shall be calculated based on no camber. Rolled beams are not cambered except for unusual profile grade requirements and with the prior consent of the Bureau of Bridges and Structures.

g. Show bearing stiffener details. Stiffeners acting as cross frame or diaphragm connection plates shall be welded to both flanges, with minimum fillet weld size based on the thicker plate joined. A "finish to bear" (includes "mill to bear" and "grind to bear") fit is required at the bottom flange. Do not specify complete joint penetration welds of stiffeners to flanges. See Section 3.3.16.

h. If intermediate or longitudinal stiffeners are shown and not otherwise needed as bracing connection plates, investigate the feasibility of an incremental increase in web thickness to eliminate most or all of them.

i. Show bearing details. See Section 3.7.

j. Show designation of NTR for applicable rolled shapes and plates which carry calculated tensile stresses. (See Section 3.1.3 General Notes)

3. A framing plan for Precast Prestressed Concrete I-beams and Bulb T-beams shall be shown.

   a. Show beam spacing and lengths.

   b. North arrow is required.

   c. If non-parallel substructure units, variable spacing or other factors require different beam lengths and/or strand patterns, beams shall be numbered and individually detailed elsewhere in the plans.

4. PPC I-beams and Bulb-T beams shall be designed for strength and serviceability in accordance with Section 3.4, applicable ABD Memos, and applicable AASHTO Specifications (LRFD or LFD).

   a. Beam size and strand pattern shall be evaluated for economical design. Minor deviations in the number of strands or strand patterns shall be avoided in similar beams to facilitate fabrication.

b. Show strand layout, draping details, lifting loop details, bursting steel details, and drain insert details. See tables, charts, details and Base Sheets in Section 3.4, online, and ABD Memos as applicable.
c. Show bar list, bar details, notes and Bill of Material.
d. Show required f'_{ci} and other pertinent design stresses, etc. on each beam sheet.
e. Show bearing details. See Section 3.7.
f. Show concrete diaphragm details. See Section 3.4.
g. Show Moment and Reaction Tables and Definitions. See Figures 3.1.12-3 and 3.1.12-6.
h. Show steel diaphragm locations.

5. A framing plan for PPC deck beams is not required.
6. PPC deck beams shall be designed for strength and serviceability in accordance with Section 3.5, applicable ABD Memos, and applicable AASHTO Specifications (LRFD).
   a. Beam size and strand pattern shall be evaluated for economical design. Minor deviations in the number of strands or strand patterns shall be avoided in similar beams to facilitate fabrication.
   b. Show strand layout, transverse tie layout, end block geometry, void tube layout, lifting loop details, and drain insert details. See tables, charts, details and Base Sheets in Section 3.5, and ABD Memos as applicable.
   c. Show bar list, bar details, notes and Bill of Material.
   d. Show required f'_{ci} and other pertinent design stresses, etc. on each beam sheet.

Abutment Details

1. Integral and Semi-Integral Abutments.
   a. Design of piles and shafts shall include impact.
   b. Step heights shall be greater than or equal to ¾ in. Otherwise, shim plates shall be specified for steel members. Set PPC I-beams or Bulb-T beams on common seats and vary concrete haunch or fillet. See Section 3.8.11.
   c. Steps 4 in. or larger shall be reinforced. See Section 3.8.11.
   d. Show dimensions and details of cap. Min. main reinforcement is #7 bars. Check min. shear reinforcement requirements in the cap and corbel.
   e. Show wingwall details.
   f. Show step and bottom of cap elevations.
   g. Show step height dimensions.

h. All elevations shall be shown to nearest 0.01 ft., and all dimensions to the nearest ⅛ in.

i. Check to see that the proper pile corrosion protection is provided if piles are used. See Section 3.10.

j. Show a bar splicer (E) for a #5 bar at the junction of approach slab and bridge slab. The bar splicer should extend 4 ft. into main slab and 6 ft. into approach slab.

k. Show anchor bolt locations orthogonal to centerline of bearings.

l. Show typical section thru abutment.

2. Stub Abutments.

a. Step heights shall be greater than or equal to ¾ in. Otherwise, shim plates shall be specified for steel members. Set PPC I-beams or Bulb-T beams on common seats and vary concrete haunch or fillet. See Section 3.8.11.

b. Steps 4 in. or taller shall be reinforced. See Section 3.8.11.

c. Min. main reinforcement is #7 bars as shown in the Base Sheets. Check min. shear reinforcement requirements also.

d. Show wingwall details.

e. Show step and bottom of cap elevations.

f. Show step height dimensions.

g. All elevations shall be shown to nearest 0.01 ft., and all dimensions to the nearest ⅛ in.

h. Show anchor bolt locations orthogonal to centerline of bearings.

i. Show typical section thru abutment.

j. Show a bent bar splicer extending from the back wall into the approach slab – note to align parallel to approach slab reinforcement.

3. Vaulted Abutments.

a. Show footing dimensions and reinforcement.

b. Detail “n” bar to provide full development lengths.

c. Step heights shall be greater than or equal to ¾ in. Otherwise, shim plates shall be specified for steel members. Set PPC I-beams or Bulb-T beams on common seats and vary concrete haunch or fillet. See Section 3.8.11.

d. Steps 4 in. or taller shall be reinforced. See Section 3.8.11.

e. Show wingwall details

f. Show step and bottom of cap elevations.

g. Show step height dimensions.

h. All elevations shall be shown to nearest 0.01 ft., and all dimensions to the nearest ⅛ in.
i. Design and detail vault slab.
j. Show anchor bolt locations orthogonal to centerline of bearings.
k. Show typical section thru abutment including drainage details.
l. Show walls designed as beam lines for vault.

4. Details of foundation type (pile, drilled shaft or spread footing) shall be checked against geotechnical recommendations on file (SGR). Show all foundation design data required per Bridge Manual Section 3.10.
5. Quantity for structure excavation shall be shown for each abutment.
6. Specify Concrete Sealer where applicable.
7. Verify seismic design requirements are met. See Sections 3.7 and 3.15.

Pier Details

1. All piers should, in general, follow layout as shown in Bridge Manual standards and Base Sheets. Show and detail stage construction, if applicable.
2. Show anchor bolt locations orthogonal to centerline of bearings.
3. Column Piers/Frame Piers/Drilled Shaft Piers/Pile Bent Piers/Wall and Hammerhead Piers.
   a. Provide reinforcement details in columns, walls, hammerheads, shafts and cap, as required by design.
   b. Check step requirements.
   c. Show step and bottom of cap elevations.
   d. Show step height dimensions.
   e. Elevations for all steps and footings shall be shown to the nearest 0.01 ft. and all dimensions to the nearest ⅛ in.
   f. Check that the need for cofferdams in stream crossing or high water table situations has been investigated properly. Check if current criteria and details are being utilized when there is need for cofferdams. Check the SGR for cofferdam and seal coat recommendations.
   g. Details of foundation type (pile, drilled shaft or spread footing) shall be checked against geotechnical recommendations on file (SGR). Show all foundation design data required per Bridge Manual Section 3.10.
   h. Quantity of structure excavation shall be shown for each pier.

i. Specify Concrete Sealer where applicable.
j. Verify seismic design requirements are met. See Sections 3.7 and 3.15.

Boring Logs

1. All Boring log sheets shall be included in the plans or a subsurface data profile plot shall be provided. See Section 3.1.11.
2. Show all boring locations on GP&E sheet.

Standard Details

1. Ensure that all current applicable Standard Base Sheets, such as temporary concrete barrier, expansion joints, drainage scuppers, bar splicer, pile standards, etc. are included. If modification of Standard Base Sheet details or notes is required or made, remove Base Sheet designation from the sheet indicating that it is no longer a Standard Base Sheet.

Special Provisions

1. Do not provide Special Provisions for items included in the Standard Specifications.
2. Non-standard pay items shall be adequately covered by plan notes or Special Provisions, including their basis of measurement and payment.
3. Include all applicable Special Provisions. The District may be contacted for currently available Special Provisions. Guide Bridge Special Provisions are also available online.

Structural Design Calculations and Pay Item Worksheet

1. Submit a copy of the Final Structure Design Computations and the Pay Item Work Sheets directly to the BBS at the time that final PS&E's are submitted to the District.

3.1.14 Submittals and Timelines for Final Plans

A Plan Development Outline (PDO) shall be prepared in accordance with Section 1.4.1 for each structure requiring a TS&L and Final Structure Plan review and approval. Three (3) copies of the PDO, including copies of the approved TSL, shall be submitted directly to the BBS no later than

9 to 12 months prior to letting, and at least 30 days prior to the anticipated submittal of Final Plans for review.

Final Structure Plans shall be prepared in accordance with Sections 1.3, 1.4 and 3, and shall be submitted to BBS for review and approval. Final Structure Plans shall be submitted directly to the BBS no later than 6 to 9 months prior to letting. The Final Structure Plan submittal for review shall include: three (3) sets of 11 x 17 prints of the structure plans and related Special Provisions, a completed Quality Verification statement and documentation in accordance with Section 1.4.2.

Final Contract Plans, Specifications, & Estimates (PS&E's) for Letting, including structure plans, shall be prepared and submitted directly to the District per the District's schedule requirements (typically, no less than 3 months prior to letting). Final PS&E's shall not be submitted to the District for processing for Letting without the required BBS review and approval of the structure plans in the contract. Final PS&E's shall incorporate all necessary revisions resulting from BBS or District reviews of previous submittals. At the time that Final PS&E's are submitted to the District, one (1) copy of the Pay Item Work Sheet and one (1) copy of the Structure Design Computations shall be submitted directly to the BBS.

3.2 Deck

3.2.1 Concrete Deck Slabs on Stringers

LRFD

For LRFD, appropriate articles for the design of concrete deck slabs on steel or prestressed concrete stringers are located in Sections 3, 4, 5 and 9. Figures 3.2.1-1 and 3.2.1-2 may be used in lieu of complete computations for the standard 8 in. thick slab. These figures are applicable to the design of slabs on steel or prestressed concrete stringers and also to the transverse design of the slab (flange portion) of reinforced concrete deck girder (T-beam) superstructures.

LFD

For LFD, concrete deck slabs supported on stringers shall be designed in accordance with the appropriate articles in Sections 3 and 8 of the AASHTO Standard Specifications. Figure 3.2.1-3 may be used as a design aid and is directly analogous to Figures 3.2.1-1 and 3.2.1-2 for the standard 8 in. thick slab.

LRFD and LFD

Also defined in Figure 3.2.1-2 are the design span and reinforcement clearances for LRFD. For LFD, this information is presented in Figure 3.2.1-3. Design stresses are shown in Figures 3.2.1-1 and 3.2.1-3. An allowance of 50 lbs. per sq. ft. for future wearing surface is included in the criteria for Figures 3.2.1-1 and 3.2.1-3. All supporting elements of new LRFD and LFD structures shall be designed using an allowance of 50 lbs. per sq. ft. If an allowance of 25 lbs. per sq. ft. for future wearing surface or no allowance for future wearing surface is specified (e.g. due to capacity of existing substructures and/or foundations) for a bridge, the use of Figure 3.2.1-3 is still permitted because the chart is intended for future wearing surfaces “up to 50 lbs. per sq. ft.”. Section 3.17 contains an LFD deck design chart for a 7 ½ in. thick slab with an allowance of 50 lbs. per sq. ft. for future wearing surface which should only be used in special circumstances with the approval of the BBS.

Note that a bridge project may have special grinding and smoothness criteria for the deck and approach slab. These would apply at the request of a District. Contact the BBS for detailed guidelines on how to incorporate grinding and smoothness criteria in the Contract plans and documents.

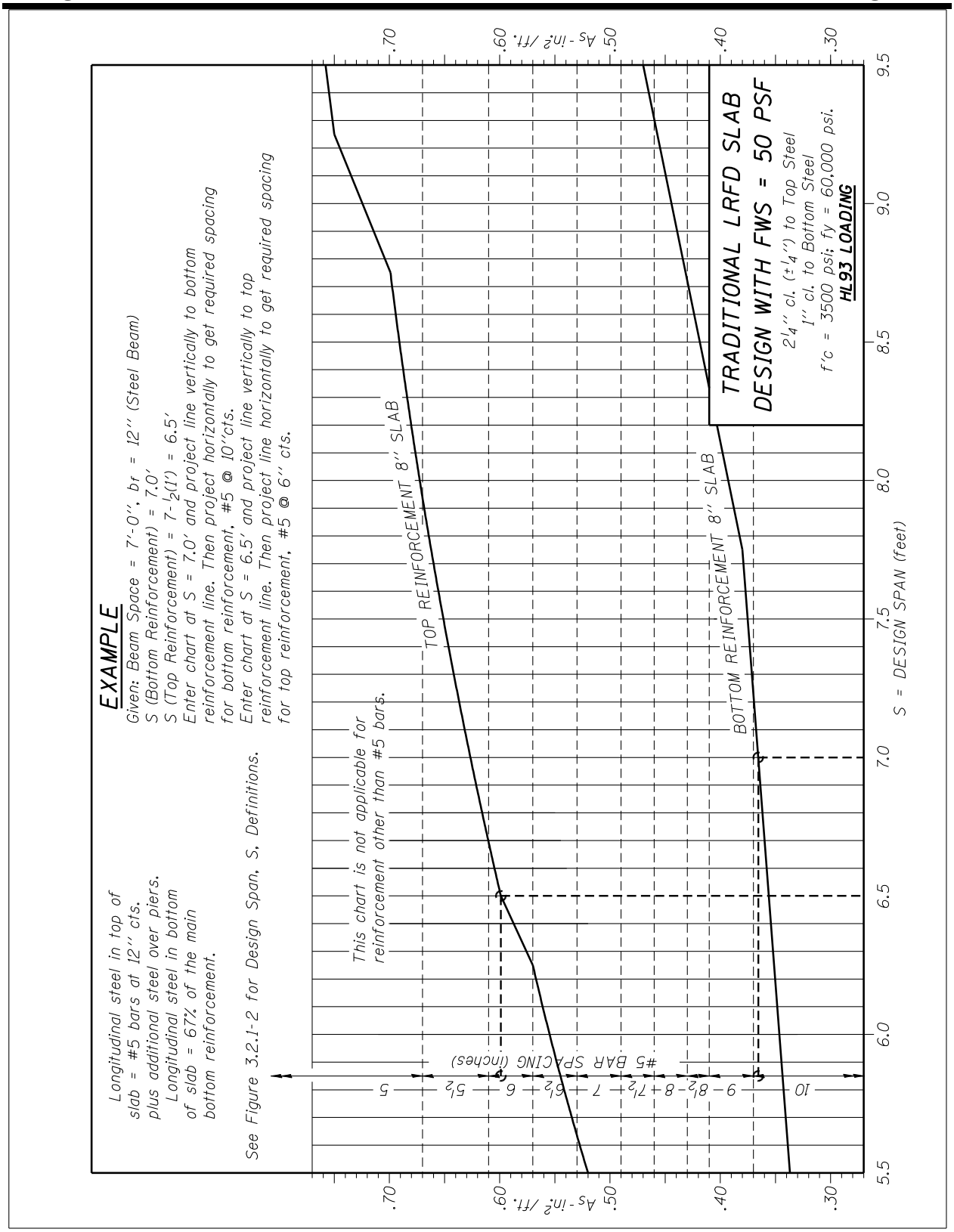
TRADITIONAL LRFD SLAB
DESIGN WITH FWS = 50 PSF
2¼'' cl. (±¼'') to Top Steel
1'' cl. to Bottom Steel
f'c = 3500 psi; fy = 60,000 psi.
HL93 LOADING
TOP REINFORCEMENT 8'' SLAB
BOTTOM REINFORCEMENT 8'' SLAB
This chart is not applicable for reinforcement other than #5 bars.
#5 BAR SPACING (inches)
5 5½ 6 6½ 7 7½ 8 8½ 9 10
As - in² /ft.
.30 .40 .50 .60 .70
5.5 6.0 6.5 7.0 7.5 8.0 8.5 9.0 9.5
S = DESIGN SPAN (feet)
EXAMPLE
Given: Beam Space = 7'-0'', br = 12'' (Steel Beam)
S (Bottom Reinforcement) = 7.0'
S (Top Reinforcement) = 7-½(1') = 6.5'
Enter chart at S = 7.0' and project line vertically to bottom reinforcement line. Then project horizontally to get required spacing for bottom reinforcement, #5 @ 10''cts.
Enter chart at S = 6.5' and project line vertically to top reinforcement line. Then project line horizontally to get required spacing for top reinforcement, #5 @ 6'' cts.
Longitudinal steel in top of slab = #5 bars at 12'' cts. plus additional steel over piers.
Longitudinal steel in bottom of slab = 67% of the main bottom reinforcement.
See Figure 3.2.1-2 for Design Span, S, Definitions.

Figure 3.2.1-1

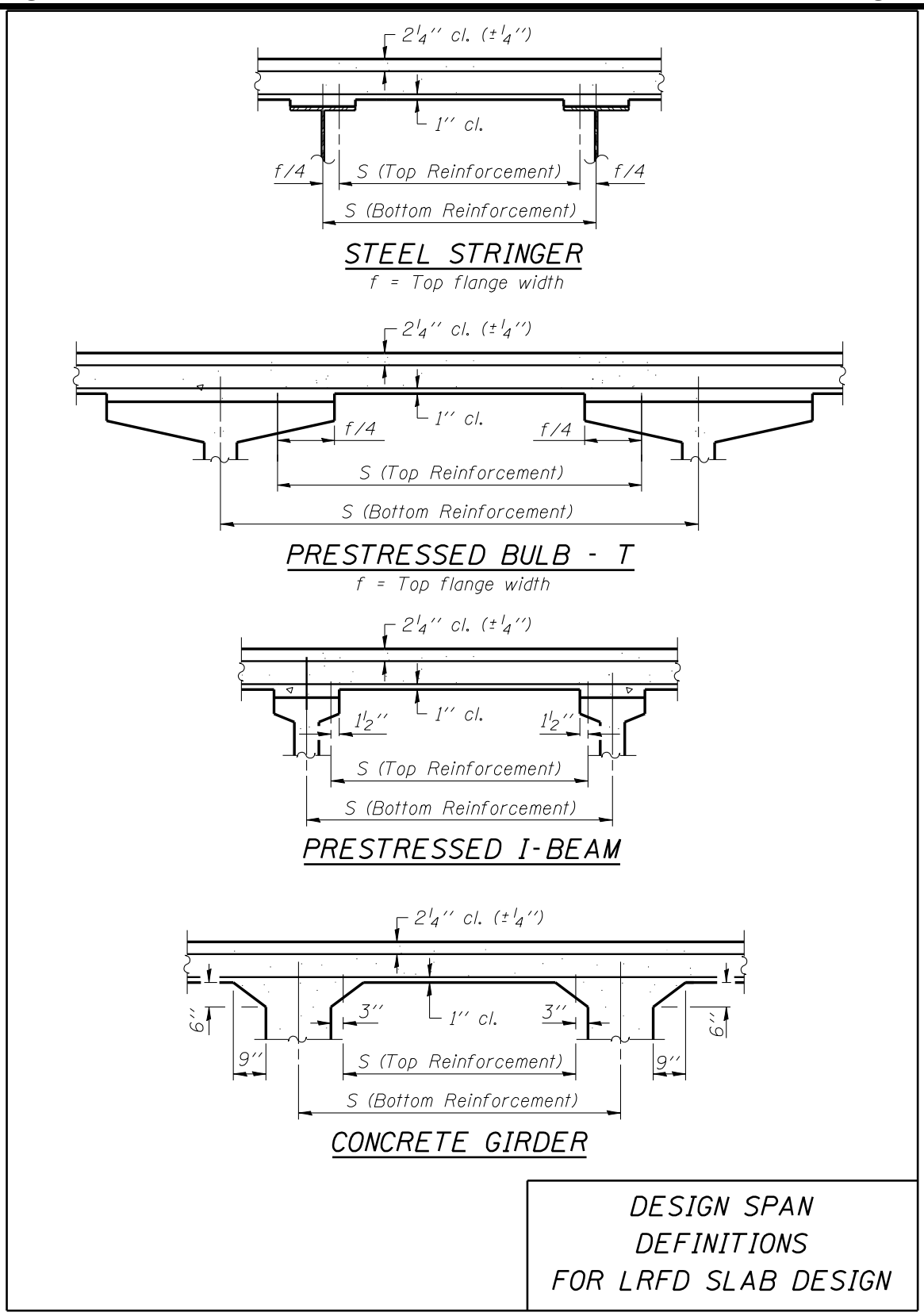
2 1/4'' cl. (± 1/4'')
1'' cl.
f/4
S (Top Reinforcement)
f/4
S (Bottom Reinforcement)
STEEL STRINGER
f = Top flange width
2 1/4'' cl. (± 1/4'')
1'' cl.
f/4
f/4
S (Top Reinforcement)
S (Bottom Reinforcement)
PRESTRESSED BULB - T
f = Top flange width
2 1/4'' cl. (± 1/4'')
1'' cl.
1 1/2''
1 1/2''
S (Top Reinforcement)
S (Bottom Reinforcement)
PRESTRESSED I-BEAM
2 1/4'' cl. (± 1/4'')
1'' cl.
3''
3''
6''
6''
9''
9''
S (Top Reinforcement)
S (Bottom Reinforcement)
CONCRETE GIRDER
DESIGN SPAN
DEFINITIONS
FOR LRFD SLAB DESIGN

Figure 3.2.1-2

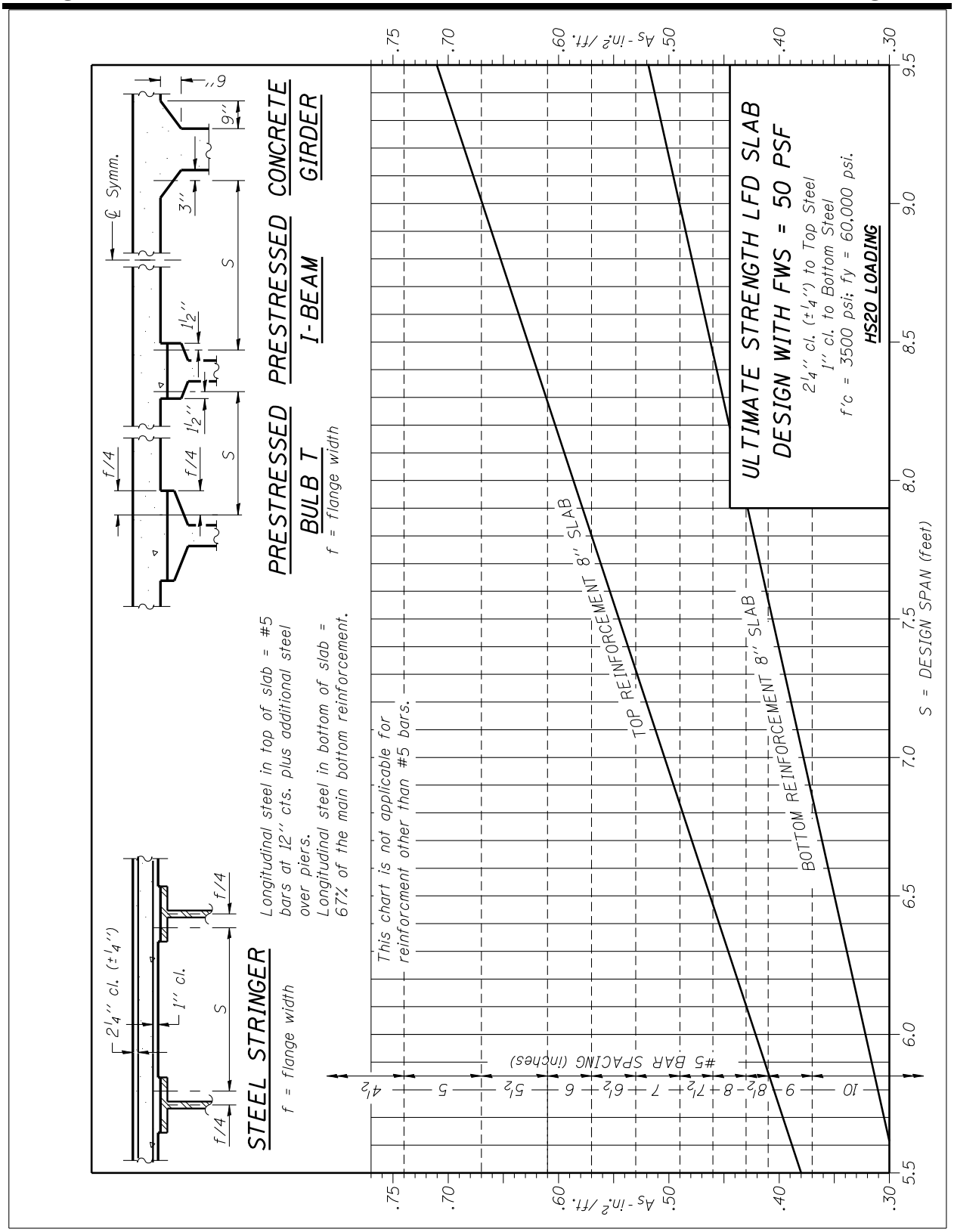
ULTIMATE STRENGTH LFD SLAB
DESIGN WITH FWS = 50 PSF
2¼'' cl. (±¼'') to Top Steel
1'' cl. to Bottom Steel
f'c = 3500 psi; fy = 60,000 psi.
HS20 LOADING
TOP REINFORCEMENT 8'' SLAB
BOTTOM REINFORCEMENT 8'' SLAB
#5 BAR SPACING (inches)
4½ 5 5½ 6 6½ 7 7½ 8 8½ 9 10
As - in.² /ft.
.75 .70 .60 .50 .40 .30
S = DESIGN SPAN (feet)
5.5 6.0 6.5 7.0 7.5 8.0 8.5 9.0 9.5
STEEL STRINGER
f = flange width
2¼'' cl. (±¼'')
1'' cl.
f/4
S
Longitudinal steel in top of slab = #5 bars at 12'' cts. plus additional steel over piers.
Longitudinal steel in bottom of slab = 67% of the main bottom reinforcement.
This chart is not applicable for reinforcment other than #5 bars.
PRESTRESSED BULB T
f = flange width
PRESTRESSED I-BEAM
CONCRETE GIRDER
℄ Symm.
1½''
3''
6''
9''

Figure 3.2.1-3

Note that the presented design span lengths for LRFD shown in Figure 3.2.1-2 have been somewhat simplified from code provisions to provide a measure of policy continuity between LRFD and LFD.

Figures 3.2.1-1 through 3.2.1-3 were developed based upon the design criteria described in Sections 3.2.1.1 and 3.3.1. Designs which fall outside of these parameters require separate computations.

3.2.1.1 Design Criteria Overview

An overview of the design criteria and equations used to develop Figures 3.2.1-1 and 3.2.1-3 is given below. As previously stated; design spans, loads, reinforcement bars (#5's), etc. outside the ranges covered by these figures require individual computation with a similar process. More complete references to specification equations, variable definitions, etc. can be found in Design Guide 3.2.1 which is available online.

LRFD and LFD

Design Stresses:

Concrete $f_c' = 3{,}500$ psi

Reinforcement $f_y = 60{,}000$ psi

Design Thickness:

Slab Thickness 8 in.

Dead Load:

Slab

Future Wearing Surface (FWS)

LRFD

Live Load: HL-93

Unfactored Moments (Including Impact):

Live Load

$$M_{LL+IM} = \text{Appendix A4}$$

Dead Load

$$M_{DC\ or\ DW} = \frac{W_{DC\ or\ DW} S^2}{10}$$

Where:

S = Design Span

w_{DC} = Slab

w_{DW} = FWS

Factored Design Moments:

$$M_{LF} = 1.25M_{DC} + 1.5M_{DW} + 1.75M_{LL+IM} \quad (3.4.1\text{-}1)$$

Ultimate Strength Requirements:

$$M_r = \phi\left[A_s f_y\left(d_s - \frac{a}{2}\right)\right] \geq M_{LF} \qquad (5.7.3.2.2\text{-}1)$$

Distribution of Reinforcement (Crack Control):

$$f_s \leq \frac{700\gamma_e}{\beta_s(s + 2d_c)} \qquad (5.7.3.4\text{-}1)$$

Where:

γ_e = 0.75 for Class 2 exposure condition

Maximum Reinforcement or Over-Reinforced Slabs (LRFD Only):

LRFD Articles 5.7.3.3.1-1 and 5.5.4.2.1 contain provisions for over-reinforced concrete slabs and beams. When specified reinforcement is excessive, the normal ϕ factor of 0.9 should be reduced.

LFD

Live Load: HS-20

Unfactored Moments (Including Impact):

Live Load

$$M_{L+I} = (1.3)(16)(0.8)\left[\frac{1}{32}(S+2)\right] \qquad (3\text{-}15)$$

Where:

S = Design Span

Dead Load

$$M_D = \frac{WS^2}{10}$$

Where:

S = Design Span

W = Slab + FWS

Factored Design Moments:

$$M_{LF} = 1.3\left(M_D + \frac{5}{3}M_{L+I}\right) \qquad (3\text{-}10)$$

Ultimate Strength Requirements:

$$M_u = \phi\left[A_s f_y d\left(1 - 0.6\rho\frac{f_y}{f'_c}\right)\right] \geq M_{LF} \qquad (8\text{-}15)$$

Distribution of Reinforcement (Crack Control):

$$f_s = \frac{z}{\sqrt[3]{d_c A}} \leq 0.6 f_y \qquad (8\text{-}61)$$

Where:

z = 130 kips/inch

3.2.2 Reinforcement (Concrete Deck Slabs on Stringers)

LRFD and LFD

On Interstate, primary route and grade separation structures, all bridge deck reinforcement bars shall be epoxy coated. In addition, all reinforcement bars in parapets, sidewalks, medians and solid concrete diaphragms shall be epoxy coated.

Epoxy coated bars shall be indicated by suffixing the bar designation with "(E)". For example, bar a_4(E). A separate weight for epoxy coated bars shall be computed and billed as "Reinforcement Bars (Epoxy Coated)" on both the deck detail sheet and the Total Bill of Materials.

Truss bars shall not be used in bridge decks. The maximum size bar permitted in the slab for transverse reinforcement is #6. However, as stated above, Figures 3.2.1-1 and 3.2.1-3 are based on #5 bars. If #6 bars are used, they shall be designed by computation. Do not mix bar sizes, i.e. providing #5's and #6's for the main reinforcement. The spacing shall be to an even ½ in., i.e. not 5 ¼ in. but 5 in. The maximum spacing for the bottom and top transverse reinforcement shall be 10 in.

Article 9.7.3.2 of the LRFD Specifications and Article 3.24.10 of the AASHTO Standard Specifications presents the criteria for longitudinal distribution reinforcement in the bottom of slabs when the main reinforcement is transverse to the direction of traffic. In effect, these Articles require (for design spans up to and including about 11 ft.) the amount of distribution steel in the bottom of the slab shall be sixty-seven (67) percent of the main bottom (positive moment) reinforcement in the slab. The longitudinal distribution reinforcement shall be #5 bars and the maximum spacing shall be 15 in.

Distribution reinforcement shall be equally spaced between stringers with the first bar approximately 4 in. from the edge of the flange. Distribution reinforcement shall not be placed directly over a stringer except as detailed for Bulb-T beams in Fig. 3.2.4-5.

For instance, if 0.61 sq. in. per ft. is required for the main bottom reinforcement in the slab, #5's at 6 in. centers would be satisfactory, and the required distribution steel would be 0.67 x 0.61 = 0.41 sq. in. per ft.

This area could be furnished by #5's at 9 in. centers spaced as described above between the flange edges. Indicate the bar spacing, for example, as 8 - #5 bars at 9 in. cts. Do not call for "8 bars equally spaced".

The longitudinal bars in the top of the slab shall be #5's at 12 in. centers. They shall be placed across the full width of the superstructure.

Top and bottom longitudinal bars should not be lapped at the same locations in the deck, nor should the top and bottom transverse bars be lapped in the same locations except when staged construction is utilized.

On continuous structures which are non-composite over the piers, additional reinforcement shall be provided in the top of the slab to help alleviate deck cracking. Between the normal #5 bars at 12 in. centers, #6 bars spaced at 12 in. centers shall be placed over the piers for the full width of the superstructure (including the top of the slab under the parapet base). See Figures 3.2.4-2, 3.2.4-4 and 3.2.4-5 for more complete details.

For continuous steel structures which are composite over the piers, the additional reinforcement shall also be #6 bars spaced at 12 in. centers, placed over the piers for the full width of the superstructure. This amount shall not be increased. These bars shall extend to the location to where they are no longer required. See Figure 3.2.4-6.

For continuous PPC I-beam and Bulb T-beam bridges, the amount of additional reinforcement required over piers may be greater than the #6 bars at 12 in. centers described above, if required for design. These bars shall extend to the location to where they are no longer required. See Figure 3.2.4-7.

3.2.2.1 Reinforcement (Treatment of Decks at End Diaphragms)

Figures 3.2.2.1-1 and 3.2.2.1-2 present the details for concrete edge beams for steel and concrete beam superstructures respectively. The reinforced concrete edge beam shall be designed to resist the entire wheel loads, and its own dead load. The concrete edge beams shall be placed from fascia beam to fascia beam and not on the overhangs of the structure.

The design of transverse edge beams over steel and concrete girders shall be according to LRFD

Article 9.7.1.4. The Department has developed a design aid for typical edge beams for both the top and bottom reinforcement as shown in Figure 3.2.2.1-3. The reinforcement consists of four bars on the top and bottom of the edge beam, placed along the skew. These bars shall be placed within the one foot nine inch dimension found in Figures 3.2.2.1-1 and 3.2.2.1-2. This one foot nine inch dimension is a minimum and may be increased as necessary to alleviate bar congestion due to high skews, or to ensure that the edge beam is resting on the end diaphragm for steel bridges. This design aid may be used for both top and bottom main reinforcement in edge beams, and for both steel and precast prestressed concrete beams. This design aid is based on the following criteria:

1. f'_c = 3.5 ksi
2. f_y = 60 ksi
3. Effective beam width = 21 inches
4. Beam Height = 15 inches
5. Dynamic Load Allowance = 75%
6. Live load moments are derived from LRFD Table A4-1.
7. Maximum design span (normal to the beams) is 9.5 feet.

To use the design aid the skew and design span (normal to the beams) are required. Use Figure 3.2.1-2 to determine the design spans for both the positive and negative reinforcement.

For bridges with a skew greater than 40°, additional x_1(E) bars shall be provided to reinforce the cantilevered slab overhanging the end diaphragm or cross frame. x_1(E) bars shall also be provided at the ends of cantilevered deck slabs on both sides of any hinge in a framing plan. The x_1(E) bars shall be placed parallel to traffic, within the limits of the end diaphragm. See Figures 3.2.2.1-1 and 3.2.2.1-2 for more details.

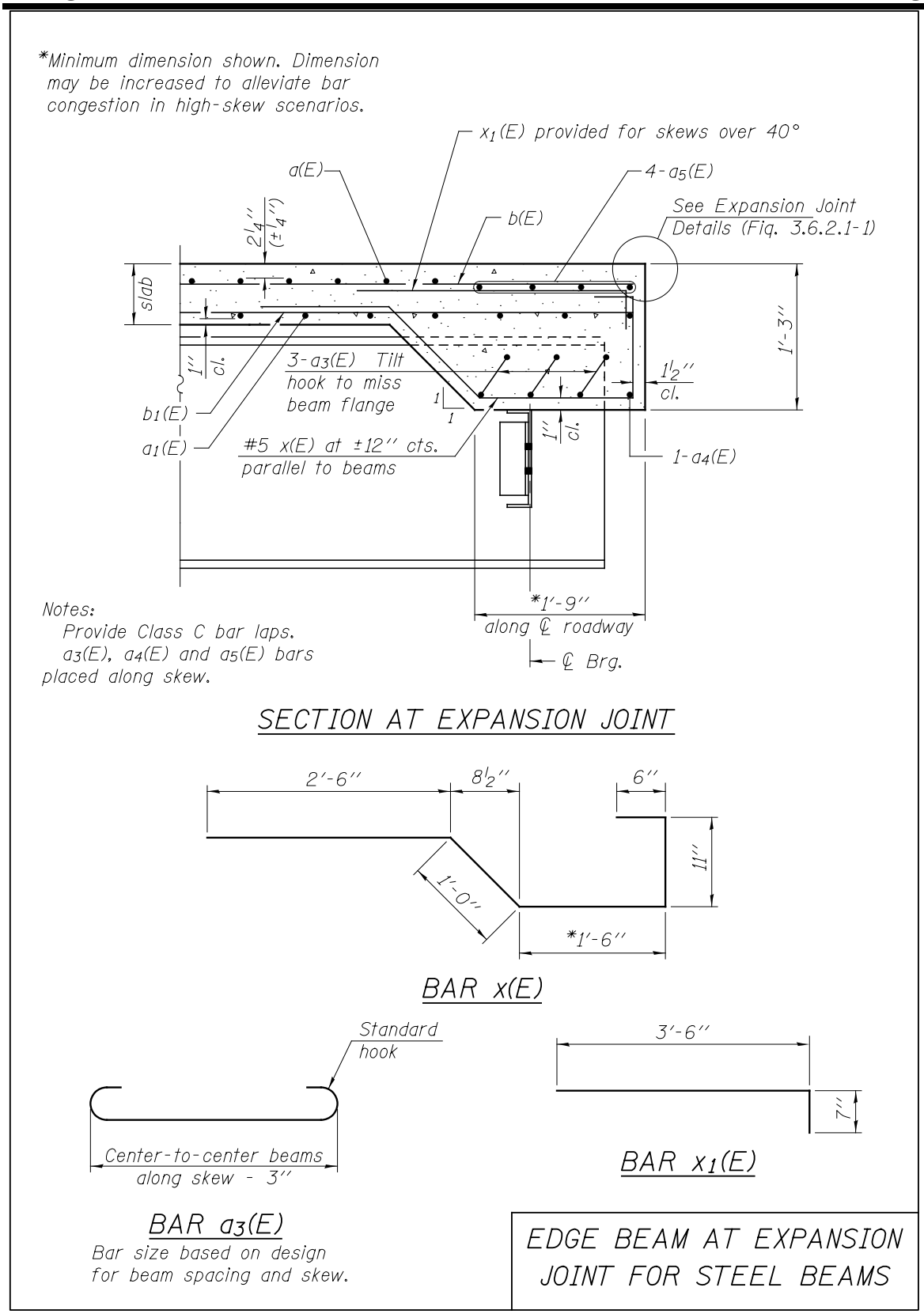

Figure 3.2.2.1-1

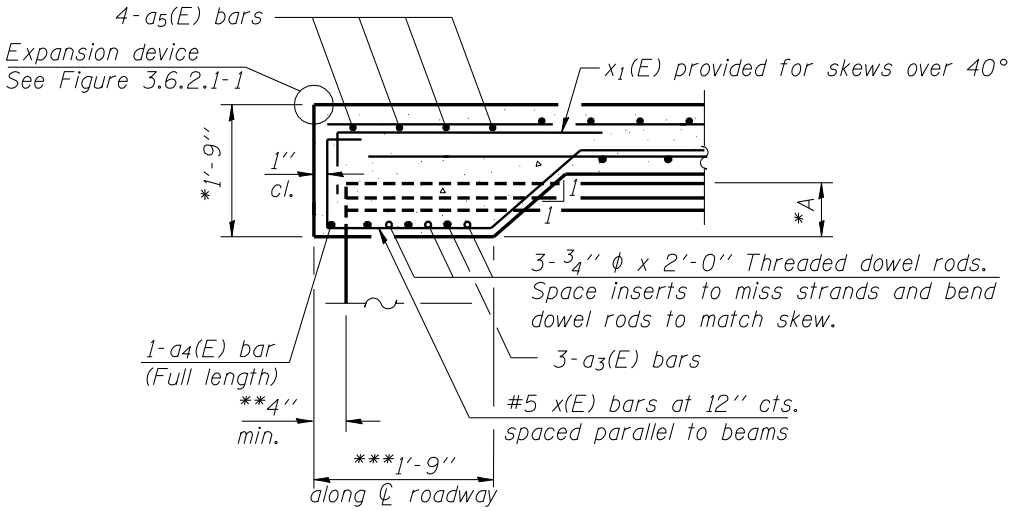

SECTION AT EXPANSION JOINT

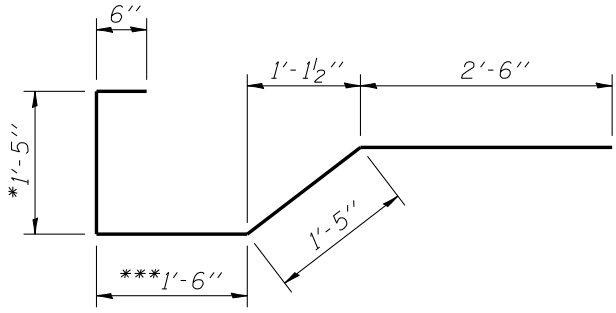

BAR x(E)

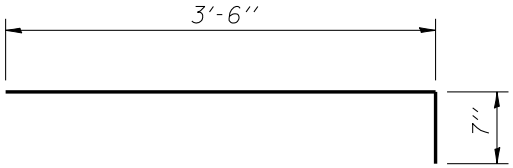

BAR x1(E)

*Increase as required to accommodate beam camber and to keep 3/4"ϕ inserts in the web of the prestressed beam.

**2" cl. measured at flange for skewed structures.

***Minimum dimension shown. Dimension may be increased to alleviate bar congestion in high-skew scenarios.

EDGE BEAM AT EXPANSION JOINT FOR PPC BEAMS

Figure 3.2.2.1-2

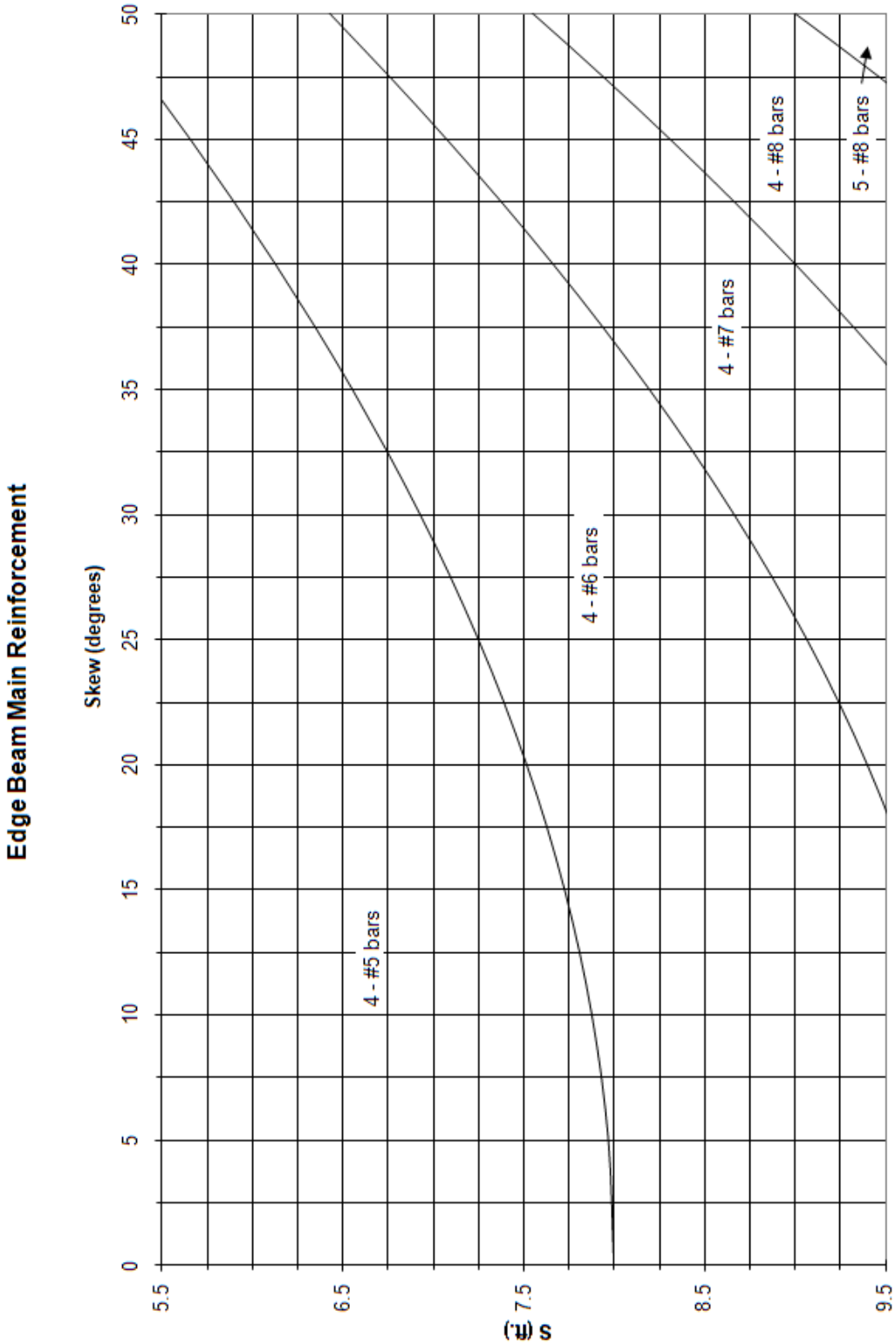

Figure 3.2.2.1-3

3.2.3 Reinforcement (Treatment of Skewed Decks)

If a bridge is skewed fifteen degrees (15°) or less and spans less than fifty (50) ft. back-to-back of abutments, the main reinforcement shall be placed parallel to the skew. Design the reinforcement as if it were at right angles to the stringers and multiply the required area by the secant of the skew angle squared, i.e. A_s x $Sec^2(\angle)$. The resulting bar size and spacing is at right angles to the reinforcement. Consequently, a further transformation is required such that the bars can be detailed parallel to the stringer lines on the plans.

If a bridge spans more than fifty (50) ft. back-to-back of the abutments and is skewed, detail the main reinforcement bars for the full length of the slab placed at right angles to the stringers and provide the following note:

Cut bars in field to fit skew and use the remainder of bars at other end of deck.

3.2.4 Parapet & Sidewalk Sections

Parapet and sidewalk sections are shown in Figures 3.2.4-1 through 3.2.4-13.

The fascia of these sections (that portion of the concrete visible in direct elevation outside of the exterior beam) shall be a constant depth for the full length of the bridge. It shall also afford continuous concealment of the top flange of the exterior beam. The dimensions of the vertical surface are standard. The vertical dimension of the sloped under surface of the section shall be computed for each structure by the designer. To establish this dimension, the designer should accurately estimate the maximum actual depth of slab plus fillet over the top of the outside stringer considering all deflections and camber. Figures 3.2.4-1, 3.2.4-3, and 3.2.4-11 establish ¼ in. as the minimum dimension below the bottom of the top exterior beam flange to the lower edge of the sloping surface for steel beams. Figures 3.2.4-12 establishes ½ in. as the minimum distance above the bottom of the top exterior beam flange to the lower edge of the sloping surface for prestressed I and Bulb-T beams. The dimension varies throughout the structure and its maximum and minimum shall be shown on the plans.

Note that the vertical depth of the sloping surface should not exceed 5 in. nor be less than 2 in. as indicated in Figures 3.2.4-1 and 3.2.4-3. In Figure 3.2.4-8, the vertical depth of the sloping surface should range between 5 in. and 3 in.

For structures on horizontal curves with variable overhangs, the depth of the sloping surface should be held close to the 2 in. minimum. The overall depth of the fascia, however, may be different on each side of the structure.

The concrete parapets shown in Figure 3.2.4-1 and 3.2.4-3 shall be used on urban and rural structures where appropriate. See Section 2.3.6.1.7.

See Figure 3.2.4-13 for alternate parapet reinforcement applicable only for interior parapet locations associated with Base Sheets R-29 and R-33.

3.2.4.1 Parapet Joints (Concrete Deck on Stringers)

To control cracking in the parapets in the negative moment areas, a joint in the parapet which is full height shall be placed over the supports on all continuous structures; in addition, these full height joints are placed at 0.6 the average distance to the points of dead load contraflexure on both sides of the support if either span is more than 50 ft. For bridges with long spans, 0.6 of the average distance to the points of dead load contraflexure may be greater than 20 ft. For these cases, place the joints at 20 ft. The joint consists of an aluminum plate in the base of the parapet and cork joint filler in the top portion sealed with caulk. No reinforcement shall pass through the aluminum plate or the cork joint filler. The reinforcement bars shall not be cut in the field but shall be properly dimensioned and listed in the Bill of Materials.

Full height parapet joints shall also be placed at the back of integral and semi-integral abutments.

Joints in the top portion of the parapet shall also be placed at 14 ft. – 0 in. to 20 ft. – 0 in. intervals outside of interior support regions. These joints shall only consist of the cork filler and caulk described above without the aluminum plate in the base of the parapet, and should be located as uniformly and symmetrically as possible within a span.

For bridges with light poles, parapet joints shall be placed a minimum of 4 ft. – 9 in. from the center of the light pole support.

See Figures 3.2.4-1, 3.2.4-3, 3.2.4-6, 3.2.4-7, 3.2.4-8 and 3.2.4-10 for more complete information and details on parapet joints.

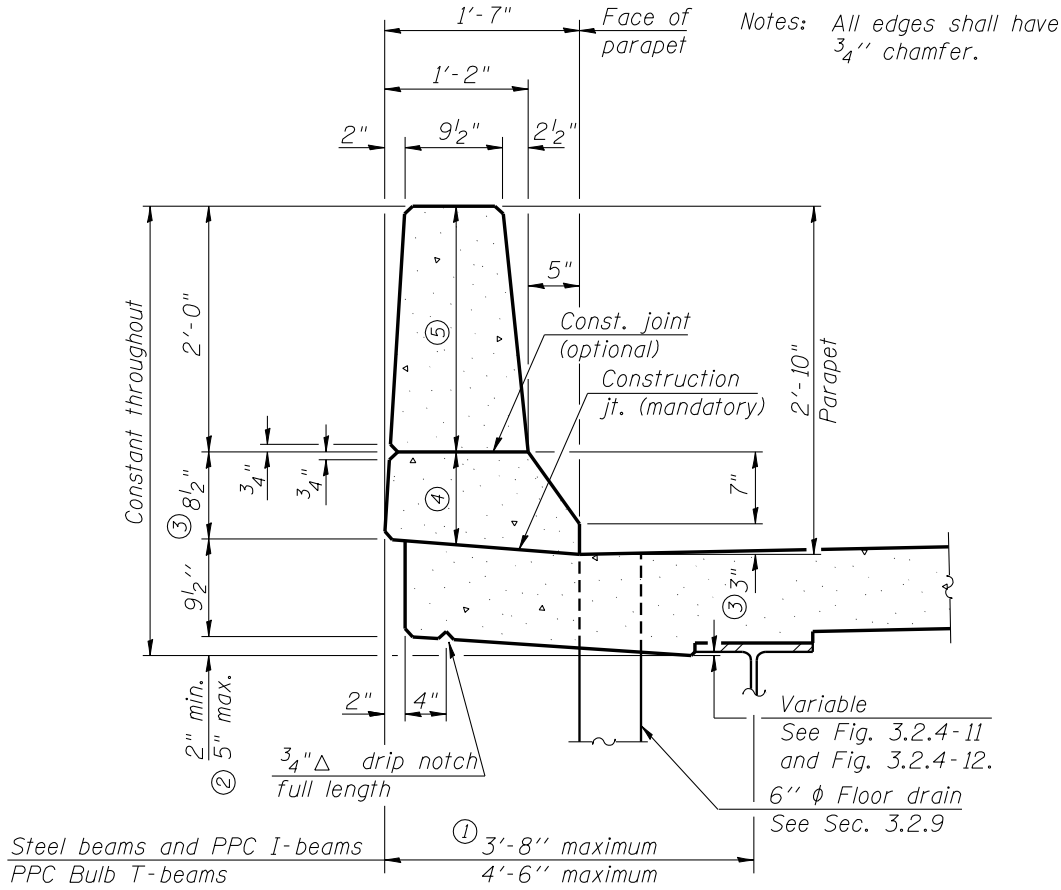

Cross sectional area of parapet = 3.00 ft^2

① When superstructure is curved and stringers are straight, the minimum allowable overhang is 1'-3". Actual maximum and minimum dimensions are to be shown on plans.

② When more than 5" is required add excess to 9 1/2" dimension.

③ On widening projects, adjust dimension and reinforcement appropriately when overlay system is used.

④ 1/8" Aluminum sheets at Piers and either side. See Fig. 3.2.4-6 and 3.2.4-7.

⑤ 1/2" Preformed self-expanding cork joint filler in parapet joints. Space at 14'-0" to 20'-0" cts. and at aluminum sheets.

34" F SHAPE
CONCRETE PARAPET
CONFIGURATION

Figure 3.2.4-1

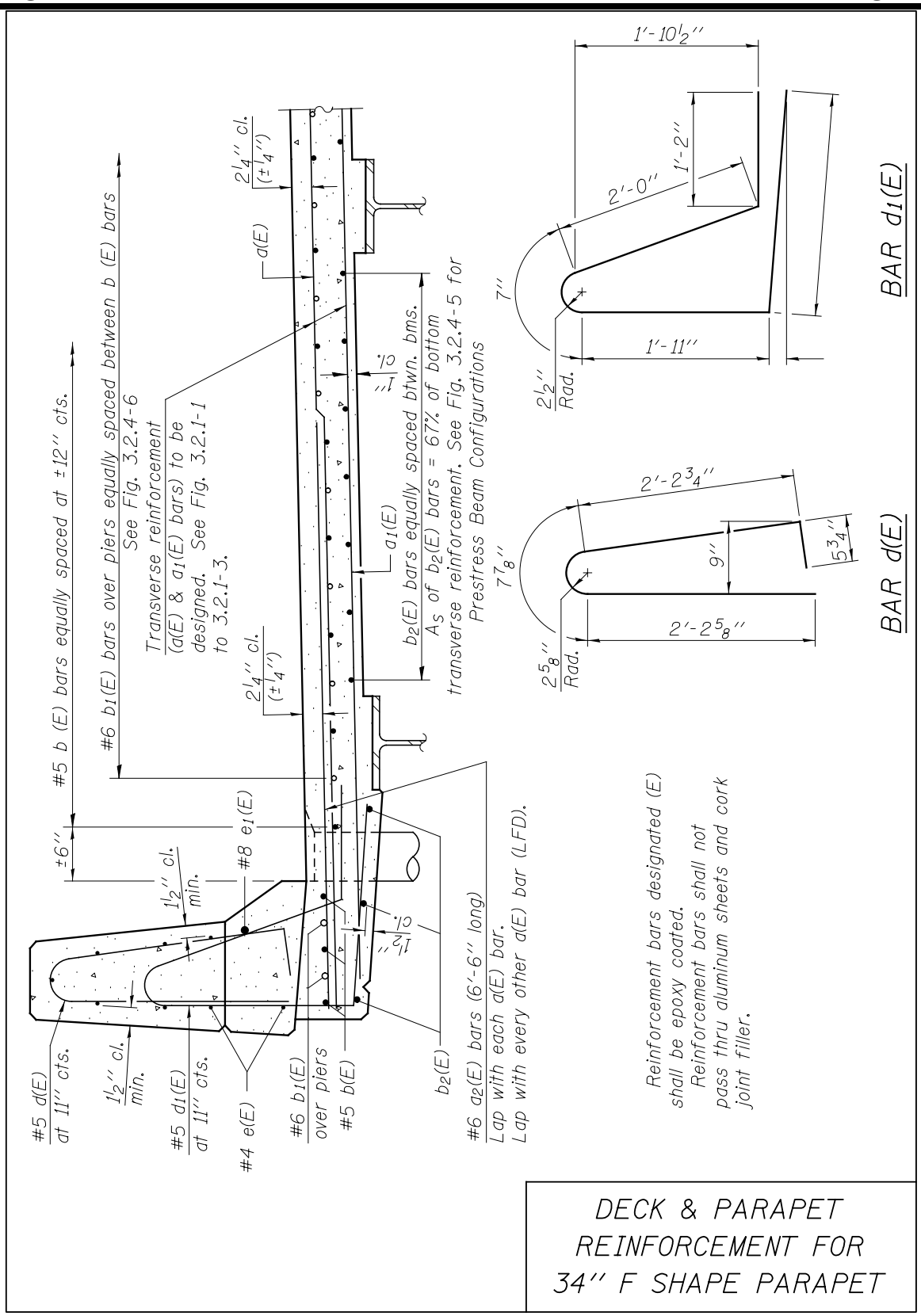
#5 d(E) at 11'' cts.
1½'' cl. min.
#5 d1(E) at 11'' cts.
#4 e(E)
#6 b1(E) over piers
#5 b(E)
b2(E)
#6 a2(E) bars (6'-6'' long)
Lap with each a(E) bar.
Lap with every other a(E) bar (LFD).
1½'' cl.
±6''
1½'' cl. min.
#8 e1(E)
#5 b (E) bars equally spaced at ±12'' cts.
#6 b1(E) bars over piers equally spaced between b (E) bars
See Fig. 3.2.4-6
Transverse reinforcement (a(E) & a1(E) bars) to be designed. See Fig. 3.2.1-1 to 3.2.1-3.
2¼'' cl. (±¼'')
a(E)
2¼'' cl. (±¼'')
1'' cl.
a1(E)
b2(E) bars equally spaced btwn. bms.
As of b2(E) bars = 67% of bottom transverse reinforcement. See Fig. 3.2.4-5 for Prestress Beam Configurations
7⅞''
2⅝'' Rad.
2'-2⅝''
9''
5¾''
2'-2¾''
BAR d(E)
7''
2½'' Rad.
1'-11''
2'-0''
1'-2''
1'-10½''
BAR d1(E)
Reinforcement bars designated (E) shall be epoxy coated.
Reinforcement bars shall not pass thru aluminum sheets and cork joint filler.
DECK & PARAPET REINFORCEMENT FOR 34'' F SHAPE PARAPET

Figure 3.2.4-2

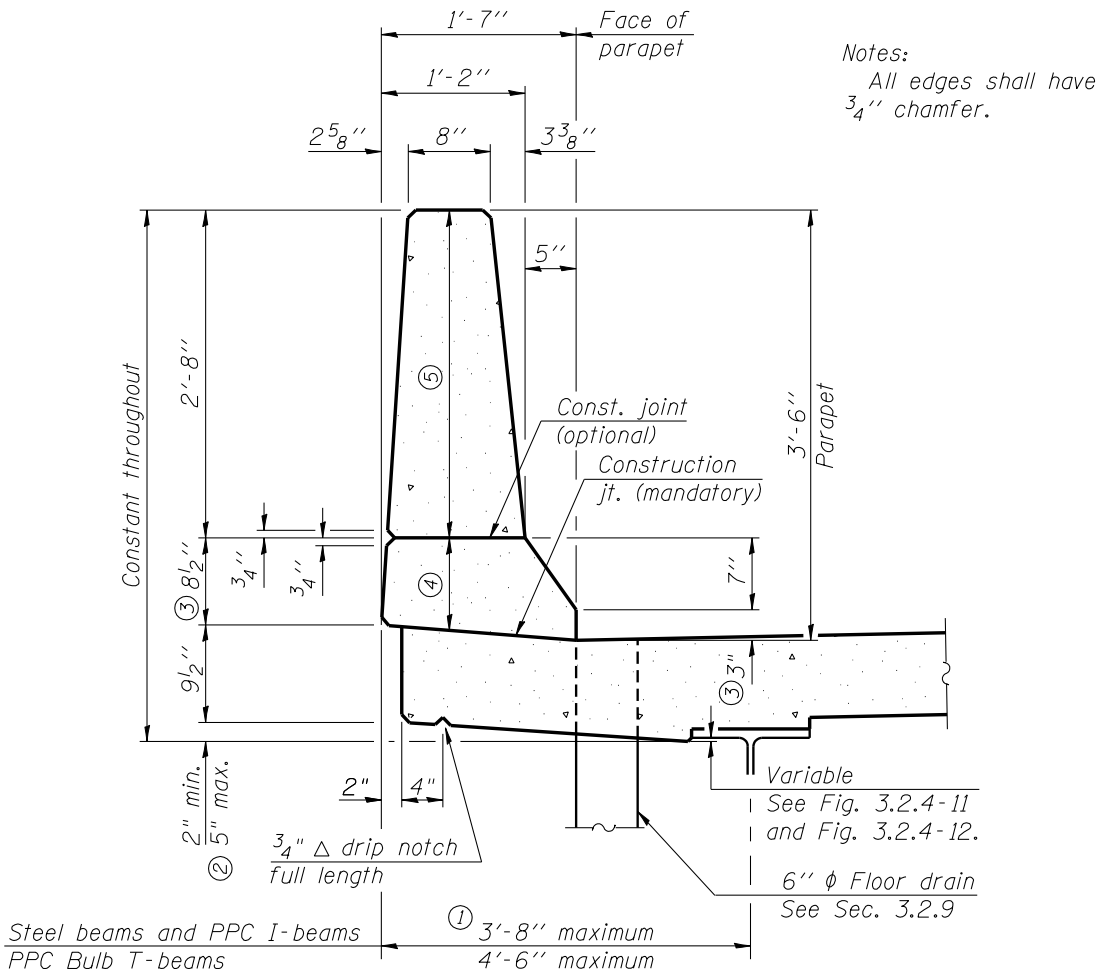

Cross sectional area of parapet = 3.46 ft^2

① When superstructure is curved and stringers are straight, the minimum allowable overhang is 1'-3". Actual maximum and minimum dimensions are to be shown on plans.

② When more than 5" is required add excess to 9 1/2" dimension.

③ On widening projects, adjust dimension and reinforcement appropriately when overlay system is used.

④ 1/8" Aluminum sheets at Piers and Either Side. See Fig. 3.2.4-6 and 3.2.4-7.

⑤ 1/2" Preformed self-expanding cork joint filler in parapet joints. Space at 14'-0" to 20'-0" cts. and at aluminum sheets.

42" F SHAPE
CONCRETE PARAPET
CONFIGURATION

Figure 3.2.4-3

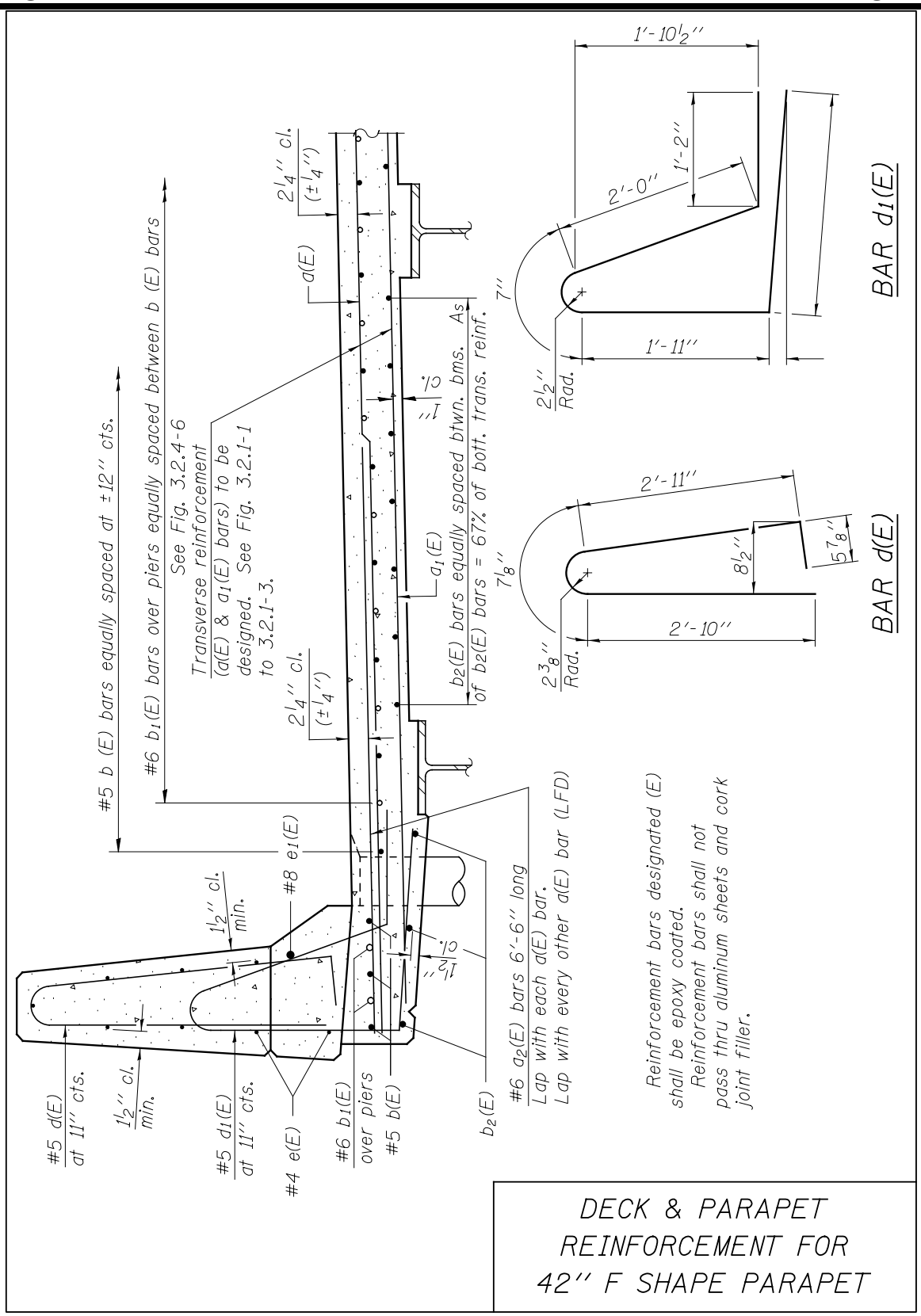
#5 b (E) bars equally spaced at ±12'' cts.
#6 b1(E) bars over piers equally spaced between b (E) bars
See Fig. 3.2.4-6
Transverse reinforcement
(a(E) & a1(E) bars) to be
designed. See Fig. 3.2.1-1
to 3.2.1-3.
2¼'' cl.
(±¼'')
a(E)
a1(E)
b2(E) bars equally spaced btwn. bms. As
of b2(E) bars = 67% of bott. trans. reinf.
1'' cl.
1½'' cl.
#8 e1(E)
1½'' cl.
min.
#5 d(E)
at 11'' cts.
1½'' cl.
min.
#5 d1(E)
at 11'' cts.
#4 e(E)
#6 b1(E)
over piers
#5 b(E)
b2(E)
#6 a2(E) bars 6'-6'' long
Lap with each a(E) bar.
Lap with every other a(E) bar (LFD)
Reinforcement bars designated (E)
shall be epoxy coated.
Reinforcement bars shall not
pass thru aluminum sheets and cork
joint filler.
1'-10½''
1'-2''
2'-0''
7''
1'-11''
2½''
Rad.
BAR d1(E)
2'-11''
8½''
5⅞''
7⅛''
2'-10''
2⅜''
Rad.
BAR d(E)
DECK & PARAPET
REINFORCEMENT FOR
42'' F SHAPE PARAPET

Figure 3.2.4-4

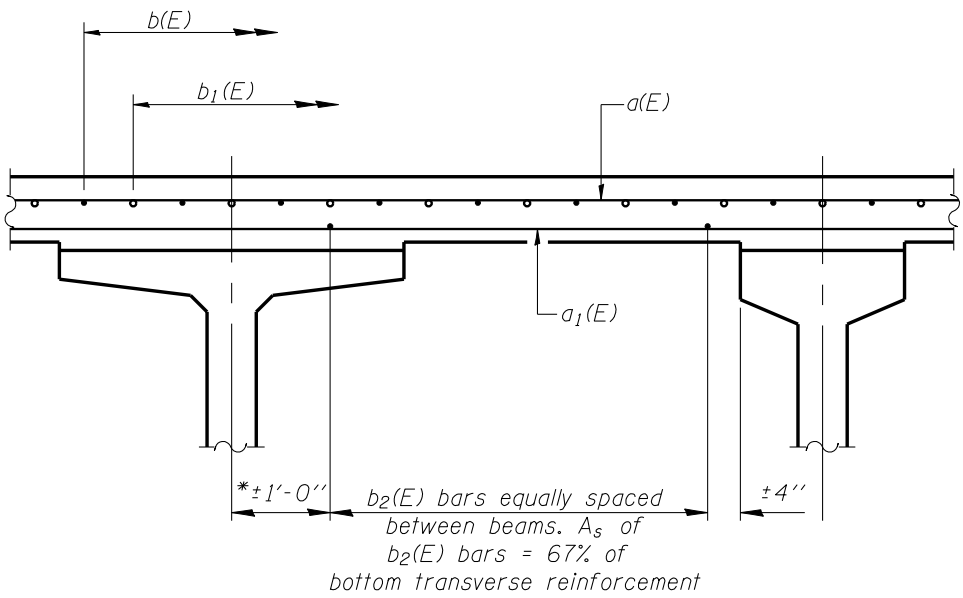

* May be decreased in negative moment regions as necessary to accomodate negative moment reinforcement.

DECK REINFORCEMENT FOR PRESTRESSED I AND BULB T-BEAMS

Figure 3.2.4-5

* For composite stringers when shear connectors are omitted in the negative moment region the reinforcement bars shall extend beyond all additional anchorage connectors at least 40 times the bar diameter.

** If splice present at either end of negative moment region, the reinforcement bars shall extend beyond the end of the top splice plate at least one development length.

D = Distance from ℄ Pier to point of dead load contraflexure in span being considered.

D_1 - Span 1
D_2 - Span 2

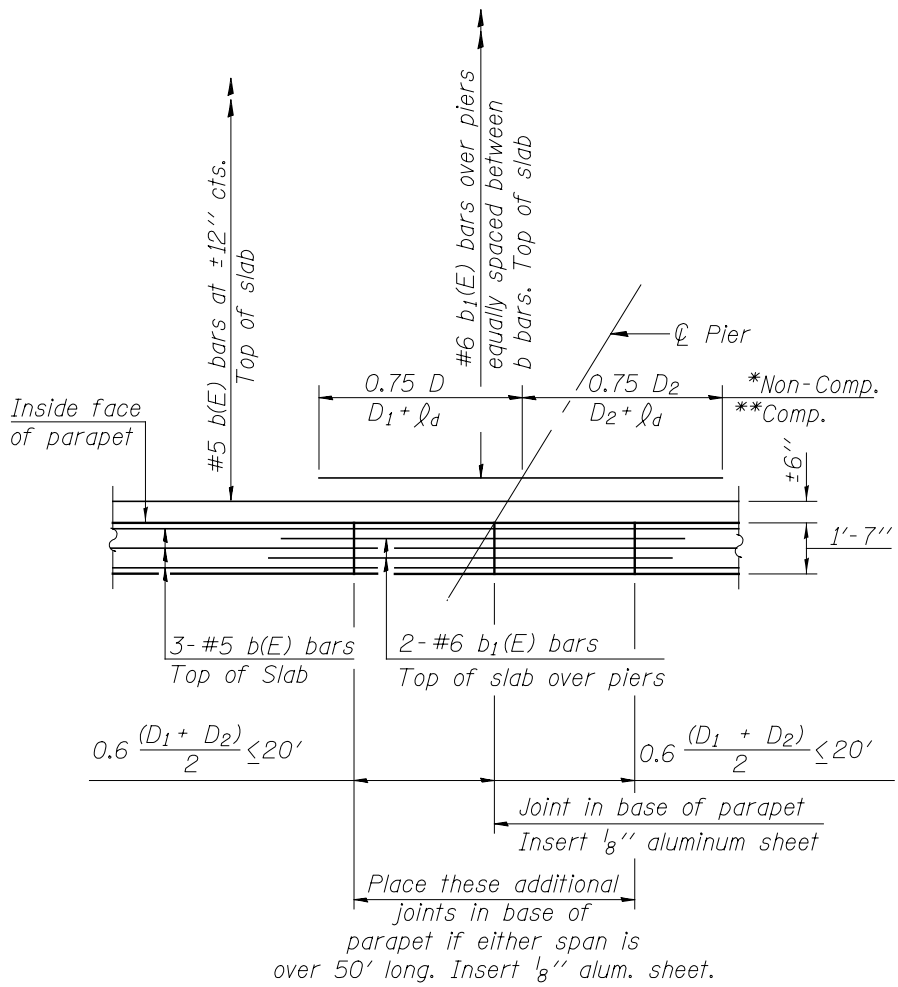

PARTIAL PLAN AT PIER

DECK REINFORCEMENT & JOINTS IN PARAPET FOR STEEL BEAMS AT PIERS

Figure 3.2.4-6

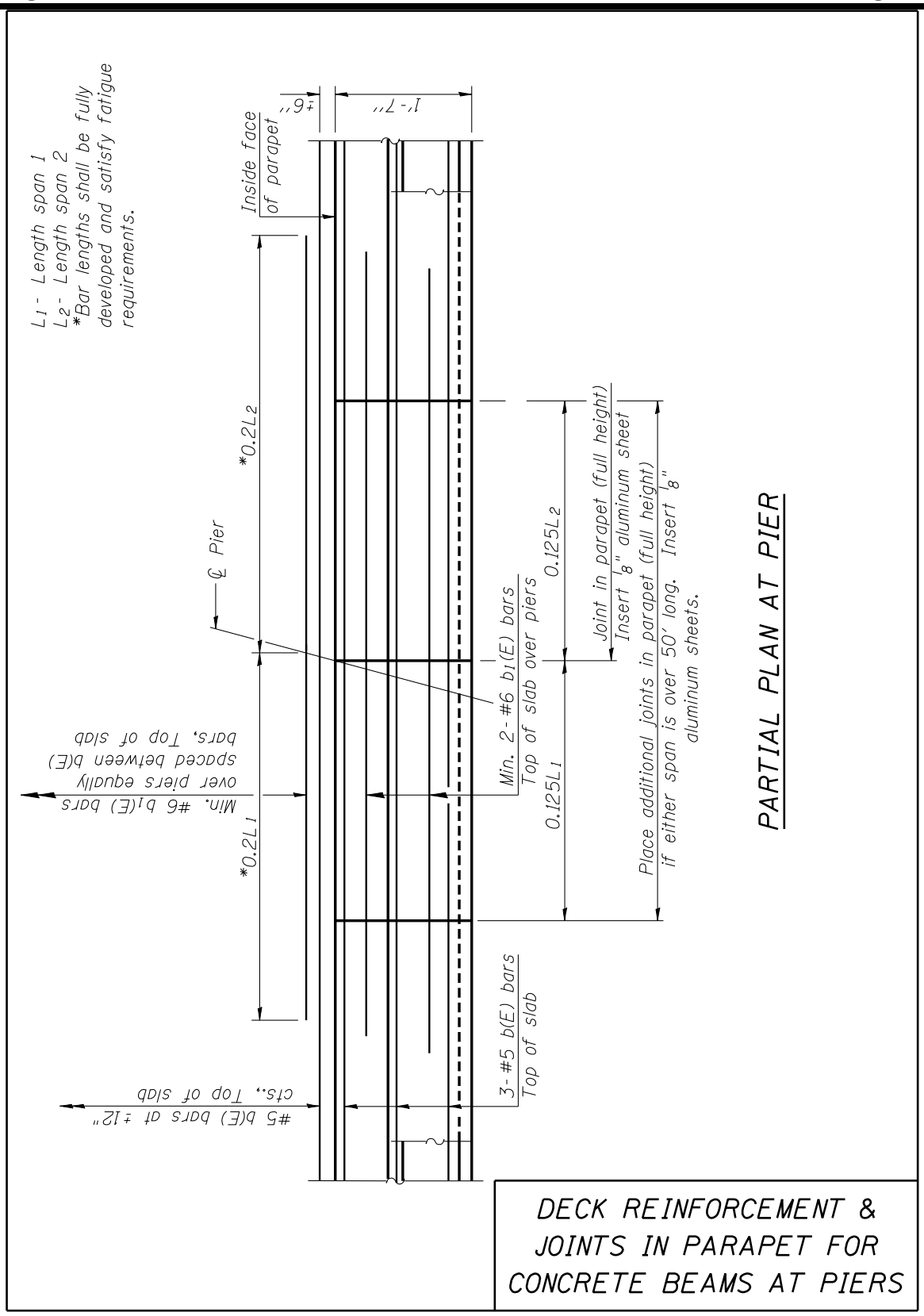
L1 - Length span 1
L2 - Length span 2
*Bar lengths shall be fully developed and satisfy fatigue requirements.
Inside face of parapet
±6"
1'-7"
*0.2L2
℄ Pier
*0.2L1
Min. #6 b1(E) bars over piers spaced between b(E) bars, Top of slab
#5 b(E) bars at ±12" cts., Top of slab
Min. 2-#6 b1(E) bars Top of slab over piers
0.125L2
0.125L1
3-#5 b(E) bars Top of slab
Joint in parapet (full height)
Insert 1/8" aluminum sheet
Place additional joints in parapet (full height) if either span is over 50' long. Insert 1/8" aluminum sheets.
PARTIAL PLAN AT PIER
DECK REINFORCEMENT & JOINTS IN PARAPET FOR CONCRETE BEAMS AT PIERS

Figure 3.2.4-7

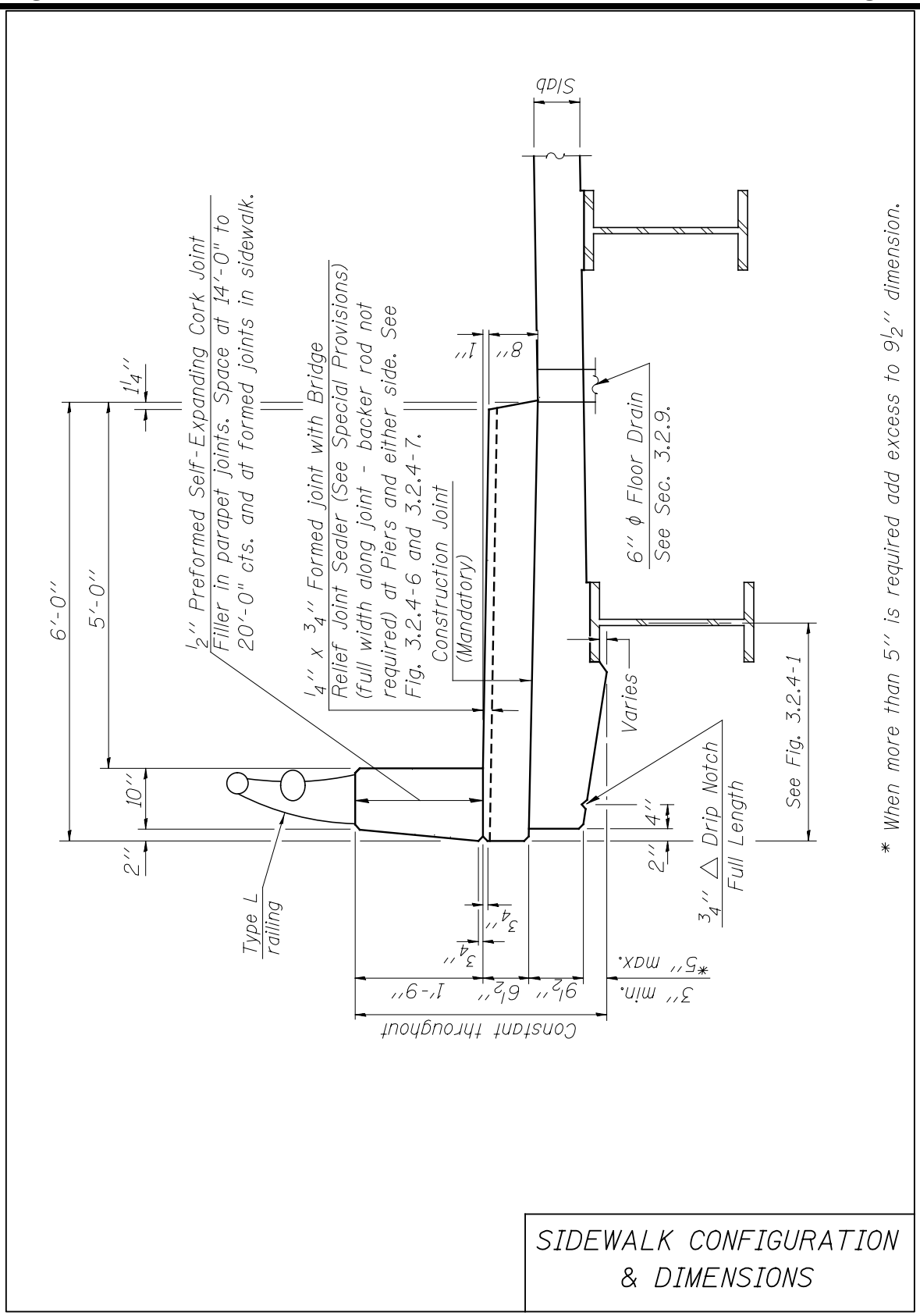
Slab
1/2'' Preformed Self-Expanding Cork Joint
Filler in parapet joints. Space at 14'-0" to
20'-0" cts. and at formed joints in sidewalk.
1 1/4''
6'-0''
5'-0''
1/4'' x 3/4'' Formed joint with Bridge
Relief Joint Sealer (See Special Provisions)
(full width along joint - backer rod not
required) at Piers and either side. See
Fig. 3.2.4-6 and 3.2.4-7.
Construction Joint
(Mandatory)
1''
8''
6'' ϕ Floor Drain
See Sec. 3.2.9.
Varies
10''
2''
Type L
railing
3/4''
3/4''
Constant throughout
1'-9''
6 1/2''
9 1/2''
3'' min.
*5'' max.
4''
2''
3/4'' △ Drip Notch
Full Length
See Fig. 3.2.4-1
* When more than 5'' is required add excess to 9 1/2'' dimension.
SIDEWALK CONFIGURATION
& DIMENSIONS

Figure 3.2.4-8

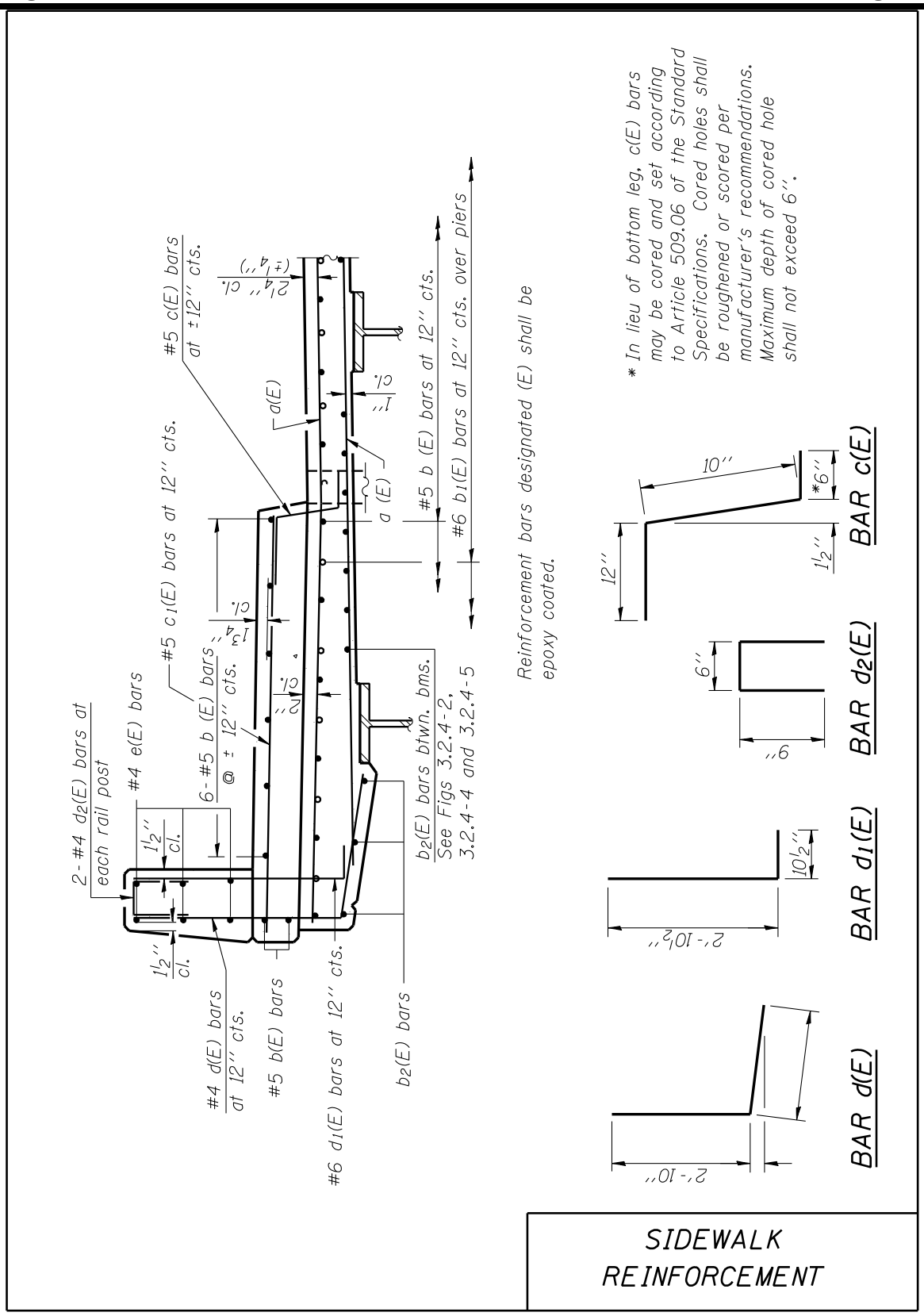
2- #4 d2(E) bars at each rail post
#4 e(E) bars
1½'' cl.
1½'' cl.
#4 d(E) bars at 12'' cts.
#5 b(E) bars
#6 d1(E) bars at 12'' cts.
b2(E) bars
#5 c1(E) bars at 12'' cts.
6-#5 b (E) bars @ ± 12'' cts.
13¼'' cl.
cl.
cl.
b2(E) bars btwn. bms. See Figs 3.2.4-2, 3.2.4-4 and 3.2.4-5
#5 c(E) bars at ±12'' cts.
21¼'' cl. (±¼'')
d(E)
1'' cl.
a (E)
#5 b (E) bars at 12'' cts.
#6 b1(E) bars at 12'' cts. over piers
Reinforcement bars designated (E) shall be epoxy coated.
* In lieu of bottom leg, c(E) bars may be cored and set according to Article 509.06 of the Standard Specifications. Cored holes shall be roughened or scored per manufacturer's recommendations. Maximum depth of cored hole shall not exceed 6''.
10''
*6''
1½''
12''
BAR c(E)
6''
9''
BAR d2(E)
10½''
2'- 10½''
BAR d1(E)
2'- 10''
BAR d(E)
SIDEWALK REINFORCEMENT

Figure 3.2.4-9

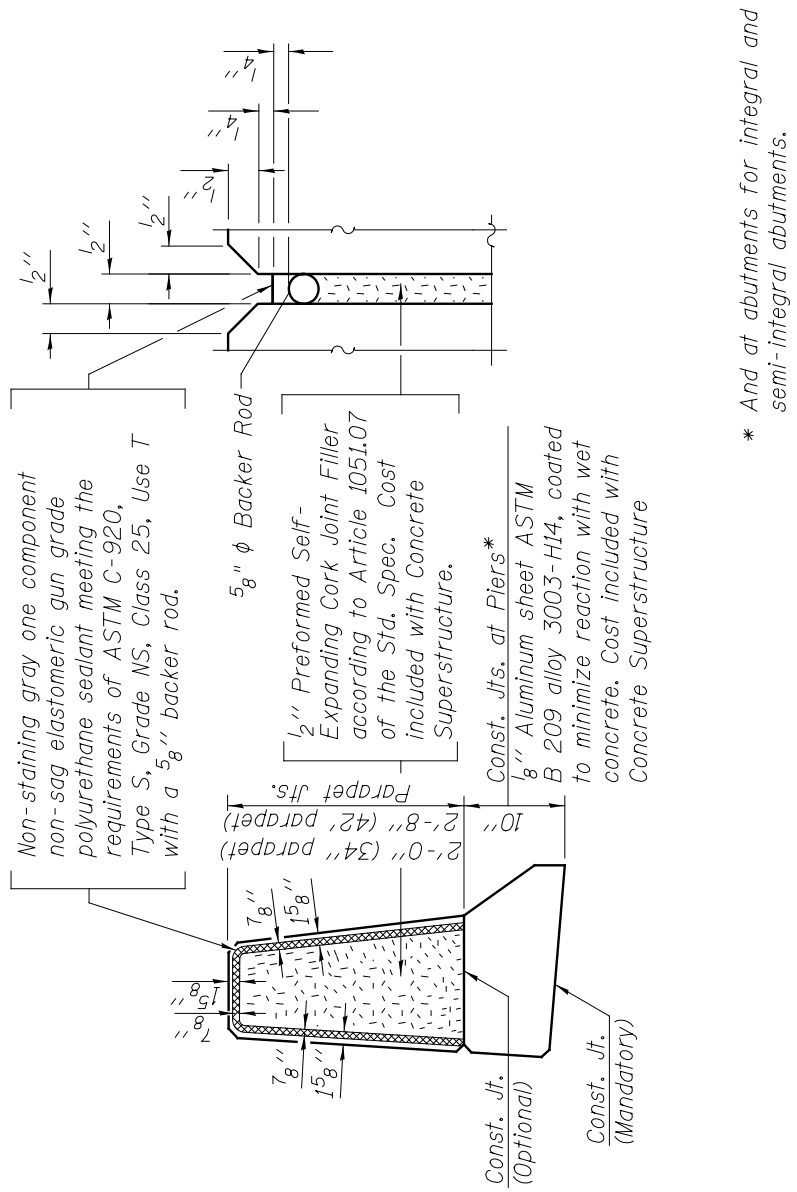

PARAPET JOINT DETAIL

Figure 3.2.4-10

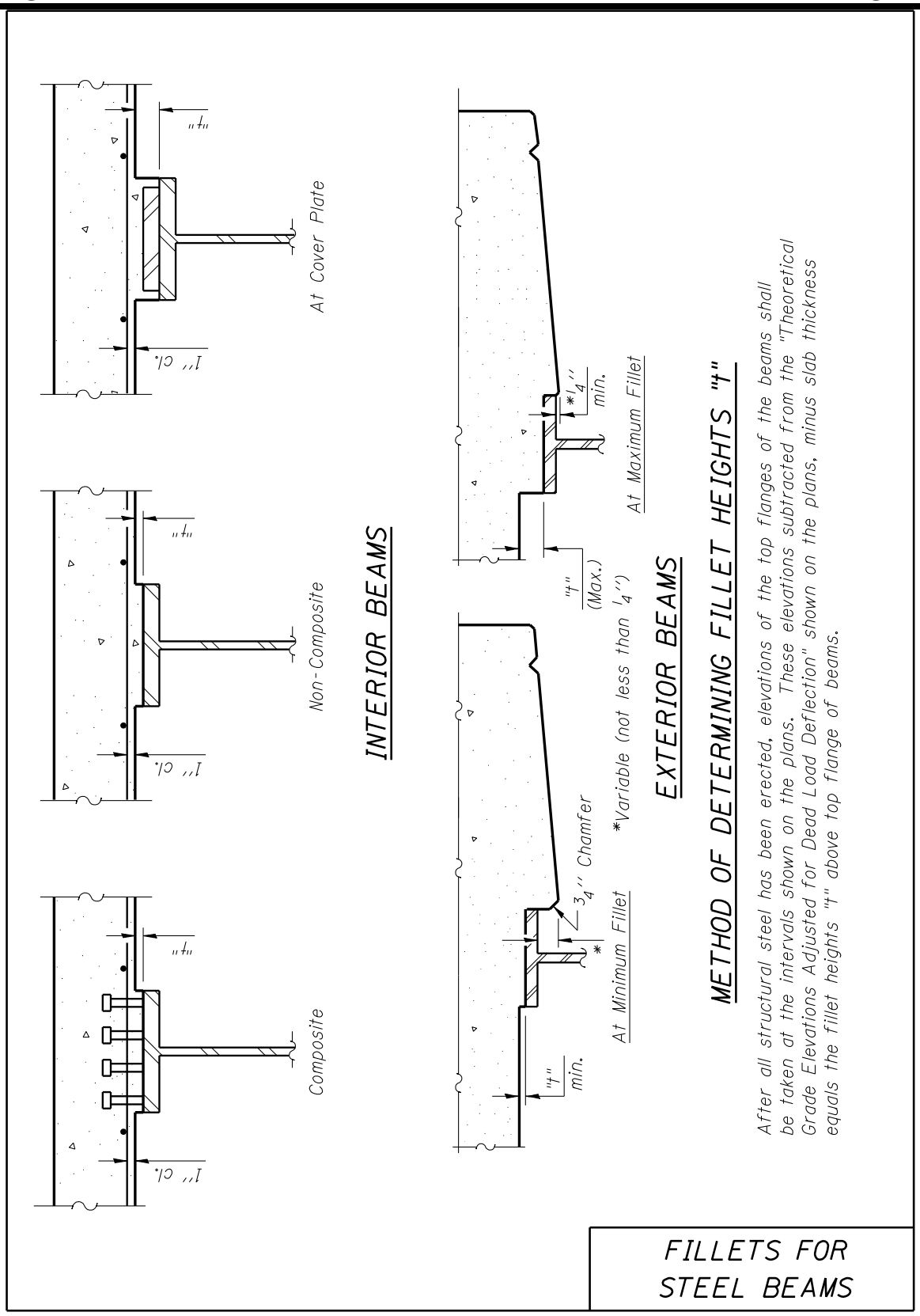

Figure 3.2.4-11

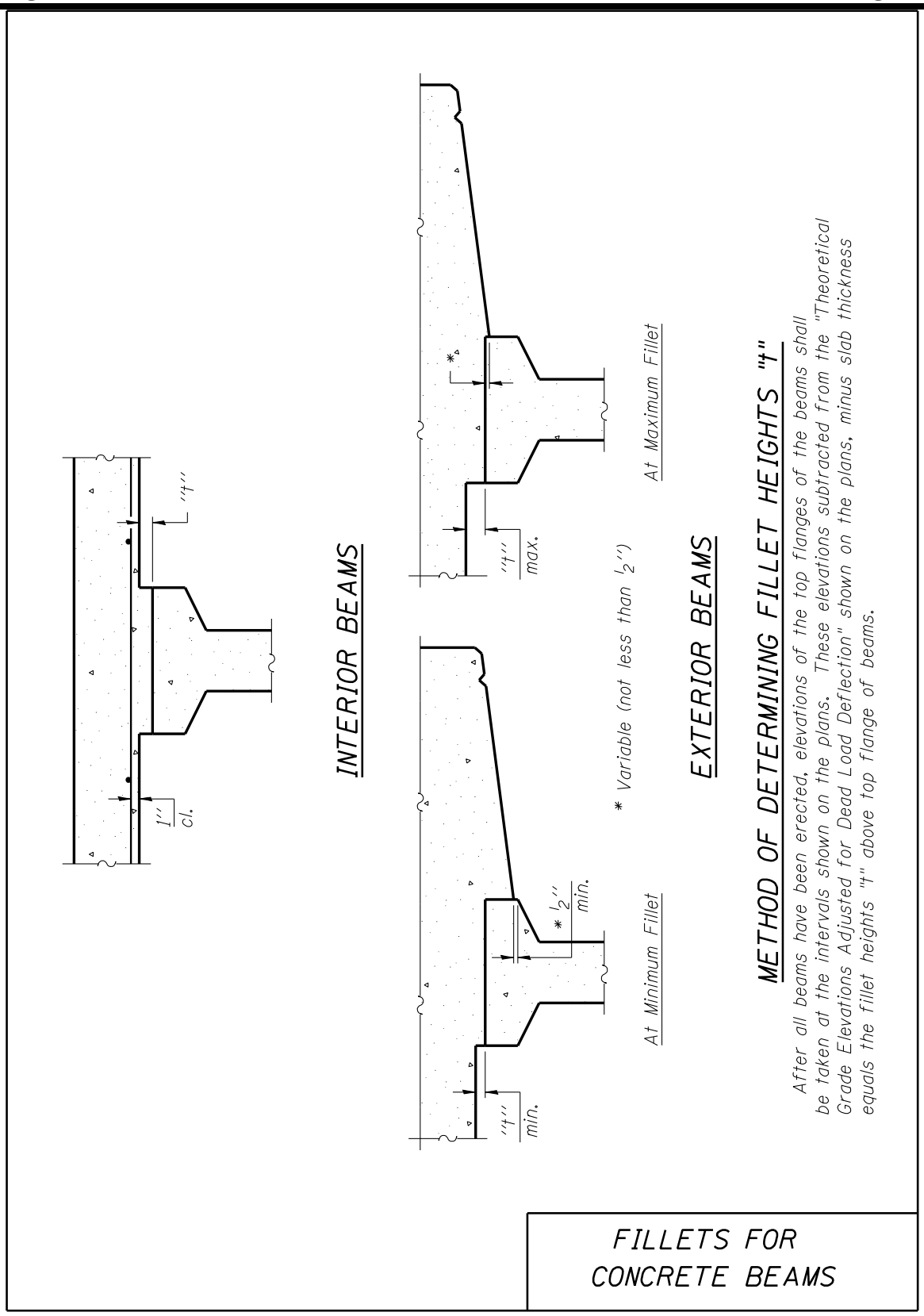

Figure 3.2.4-12

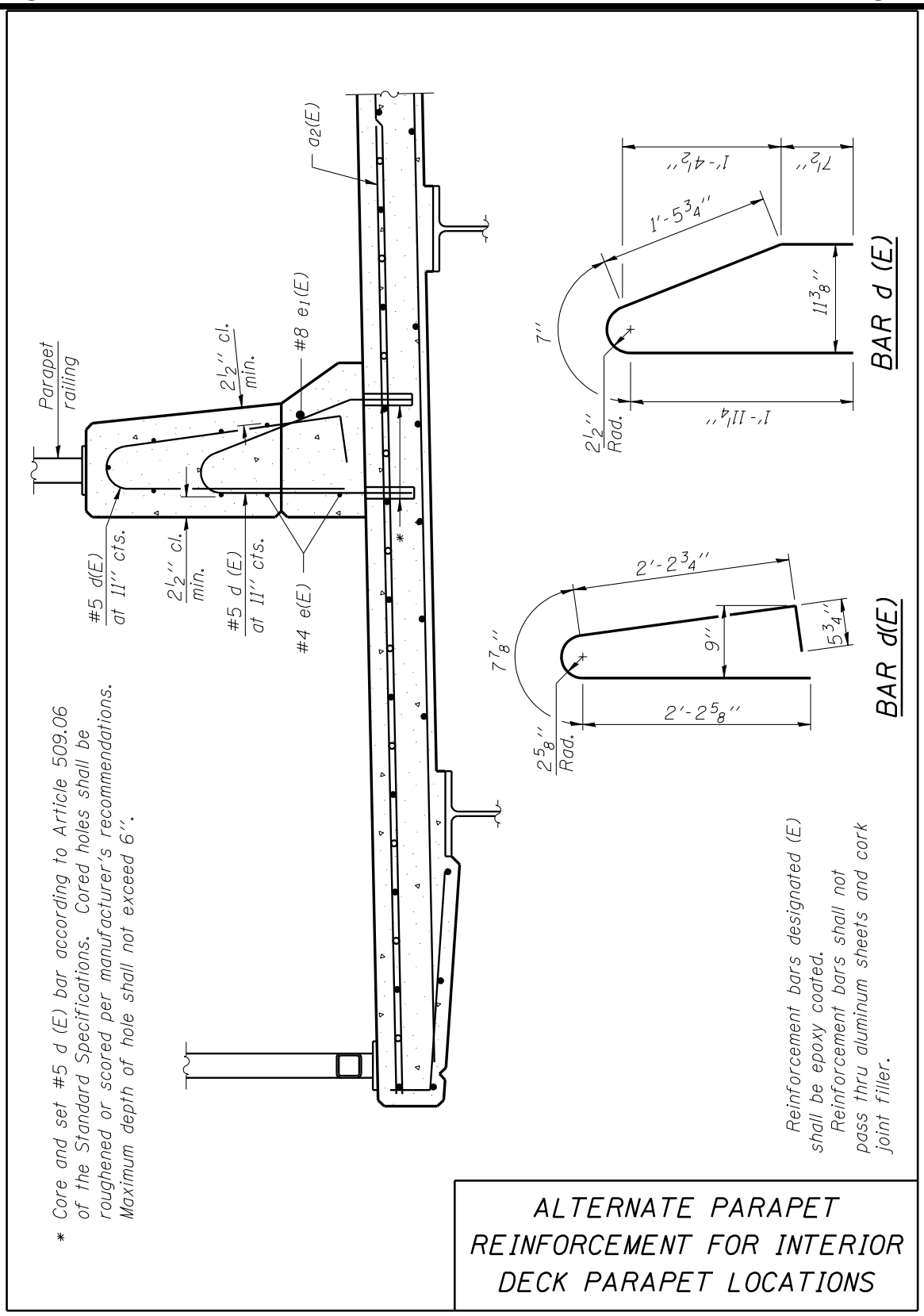

Figure 3.2.4-13

3.2.5 Raised Curb Medians

Figures 3.2.5-1 and 3.2.5-2 detail two types of raised-curb medians: Superimposed and Voided. Either type may be split with a 1 in. separation joint depending on the overall bridge width. See Section 3.2.7. The type to be used on a particular deck should best balance ease of construction, and economical use of concrete and reinforcement for the required median width and stringer locations. Note that Figure 3.2.5-1 also provides joint details for superimposed medians.

Figures 3.2.5-1 and 3.2.5-2 depict barrier curbs. See the Design and Environment Manual for additional guidelines on medians for bridge decks including those with mountable curbs.

In general terminology, “Median” is that portion of the deck between the inside edges of the traffic lanes, and the raised portion is this center distance minus the gutter flag that is used in the approach cross-section.

Raised-curb medians on the bridge deck are formed with a radius at the top to match the roadway curb and gutter section. The top of the median surface shall be sloped for drainage.

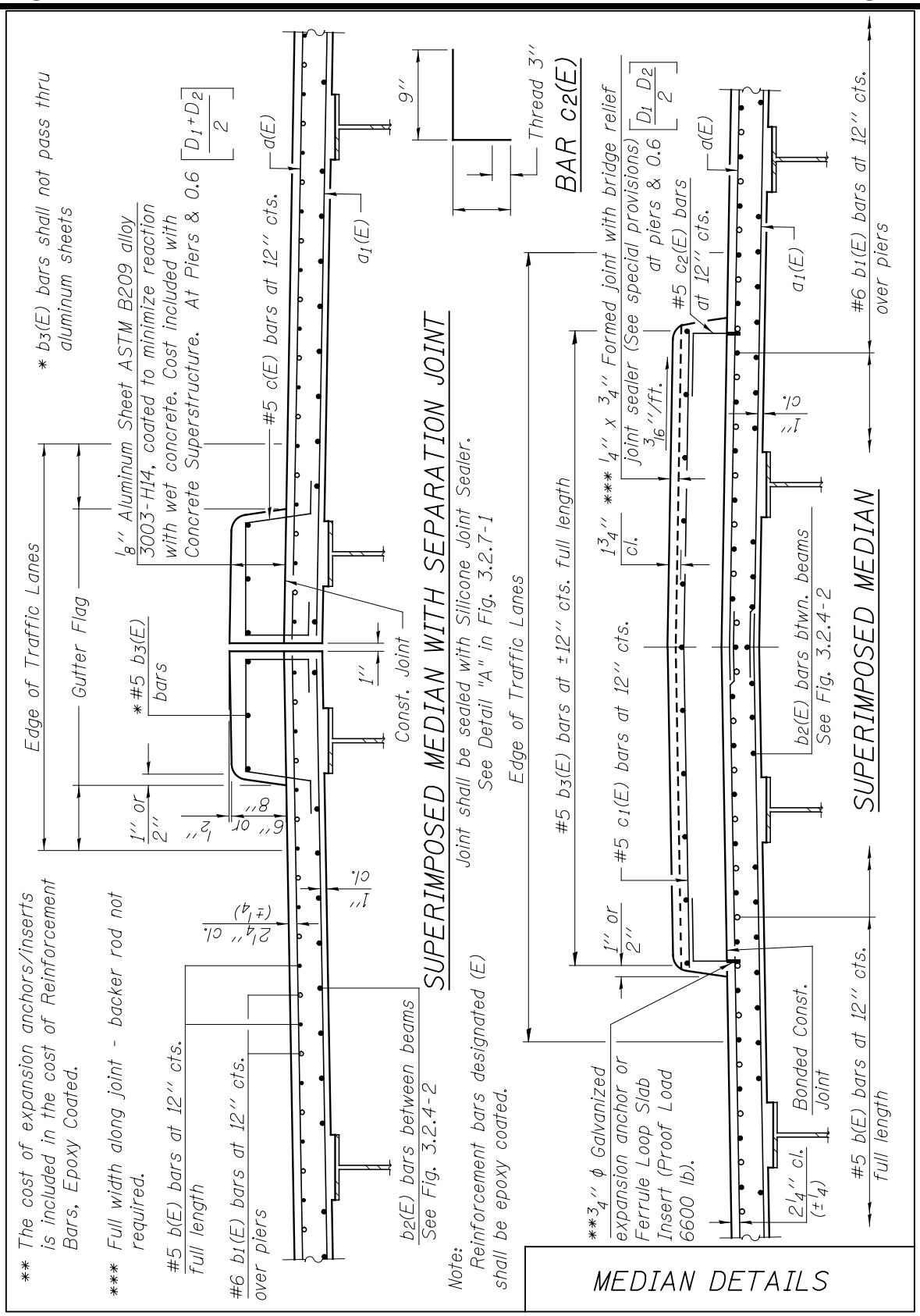
** The cost of expansion anchors/inserts is included in the cost of Reinforcement Bars, Epoxy Coated.
*** Full width along joint - backer rod not required.
#5 b(E) bars at 12'' cts. full length
#6 b1(E) bars at 12'' cts. over piers
Edge of Traffic Lanes
Gutter Flag
1'' or 2''
6'' or 8''
1/2''
24'' cl. (±1/4)
1'' cl.
1/8'' Aluminum Sheet ASTM B209 alloy 3003-H14, coated to minimize reaction with wet concrete. Cost included with Concrete Superstructure. At Piers & 0.6 [(D1+D2)/2]
* b3(E) bars shall not pass thru aluminum sheets
#5 c(E) bars at 12'' cts.
a(E)
a1(E)
*#5 b3(E) bars
1''
Const. Joint
b2(E) bars between beams See Fig. 3.2.4-2
SUPERIMPOSED MEDIAN WITH SEPARATION JOINT
Joint shall be sealed with Silicone Joint Sealer. See Detail "A" in Fig. 3.2.7-1
Edge of Traffic Lanes
Note: Reinforcement bars designated (E) shall be epoxy coated.
9''
Thread 3''
BAR c2(E)
#5 b3(E) bars at ±12'' cts. full length
1 3/4'' cl.
#5 c1(E) bars at 12'' cts.
1'' or 2''
**3/4'' φ Galvanized expansion anchor or Ferrule Loop Slab Insert (Proof Load 6600 lb).
*** 1/4'' x 3/4'' Formed joint with bridge relief joint sealer (See special provisions) 3/16''/ft.
#5 c2(E) bars at 12'' cts. at piers & 0.6 [(D1 D2)/2]
a(E)
a1(E)
1'' cl.
b2(E) bars btwn. beams See Fig. 3.2.4-2
Bonded Const. Joint
24'' cl. (±1/4)
#5 b(E) bars at 12'' cts. full length
#6 b1(E) bars at 12'' cts. over piers
SUPERIMPOSED MEDIAN
MEDIAN DETAILS

Figure 3.2.5-1

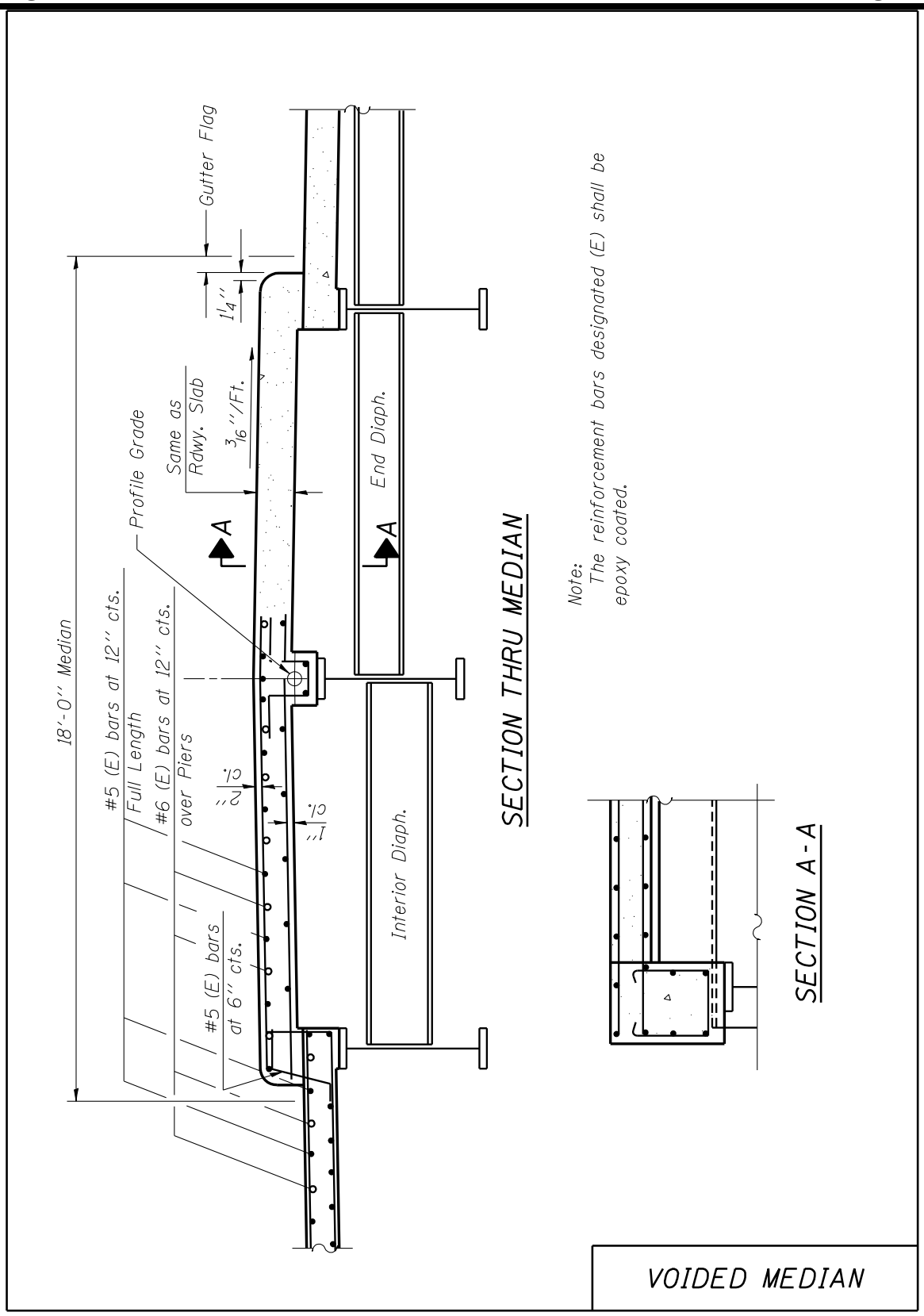
Gutter Flag
1¼''
Same as Rdwy. Slab
3/16''/Ft.
Profile Grade
A
A
End Diaph.
Interior Diaph.
18'-0'' Median
#5 (E) bars at 12'' cts.
Full Length
#6 (E) bars at 12'' cts.
over Piers
#5 (E) bars at 6'' cts.
1''
SECTION THRU MEDIAN
Note:
The reinforcement bars designated (E) shall be epoxy coated.
SECTION A-A
VOIDED MEDIAN

Figure 3.2.5-2

3.2.6 Longitudinal Bonded Joints (Concrete Deck on Steel Stringers)

The Illinois Department of Transportation allows the use of optional longitudinal bonded joints in the roadway slab at certain locations of wide decks when construction is not staged (See Figure 3.2.7-1). These joints are normally placed in the middle half of the outside framing panels and, when possible, shall line up with the outside edge of the traffic lanes. On wide decks it may be permissible to place a longitudinal bonded joint at the edge of an intermediate traffic lane. No bonded joint shall cross a beam line. If a situation is met which does not appear to permit the use of a longitudinal bonded joint within these limitations, the Engineer of Bridges and Structures should be notified in order that the matter can be resolved.

Longitudinal bonded stage construction joints are used for bridge projects which are staged. Bar splicers shall be required at stage construction joints. See Section 2.3.8 for more information on staged construction. Bar splicers are not required for optional longitudinal bonded construction joints.

Special consideration should be given to placement of the longitudinal slab steel in relation to the bonded joint on a horizontally curved structure. In extreme cases, it may be necessary to lay out the reinforcement in plan to assure proper placement of the distribution steel.

Note that no longitudinal bonded joint is shown adjacent to the voided median in Figure 3.2.5-2. If the Regional Engineer requests variation from this standard to meet certain construction procedures, the Engineer of Bridges and Structures shall be notified and the variation will be incorporated into the plans.

3.2.7 Longitudinal Open Joints

When the distance between the fascia beams is greater than 90 ft. – 0 in., the deck shall be split by means of a one inch (1 in.) open joint. This joint shall be sealed with a silicone sealer and rubber rod designated as “Silicone Joint Sealer” (see Figure 3.2.7-1) on the plans when located in a raised median or in a deck that is not waterproofed and surfaced. The one inch (1 in.) open joint is not required if the deck is stage constructed and the total width of the staged pours is less than or equal to 120 ft. Figure 3.2.7-2 provides details for a longitudinal open joint at median barriers.

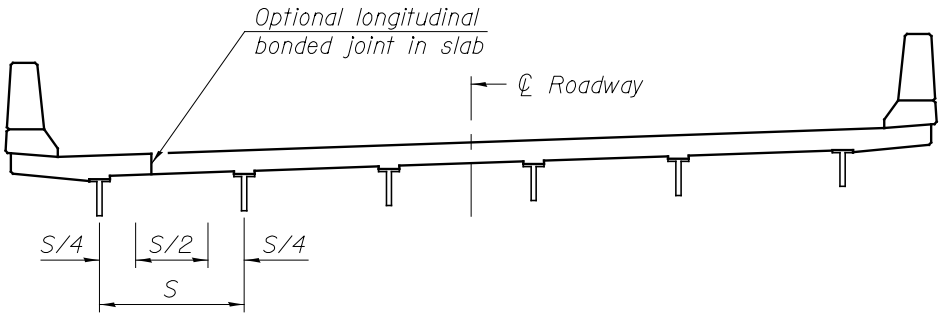

LONGITUDINAL JOINTS

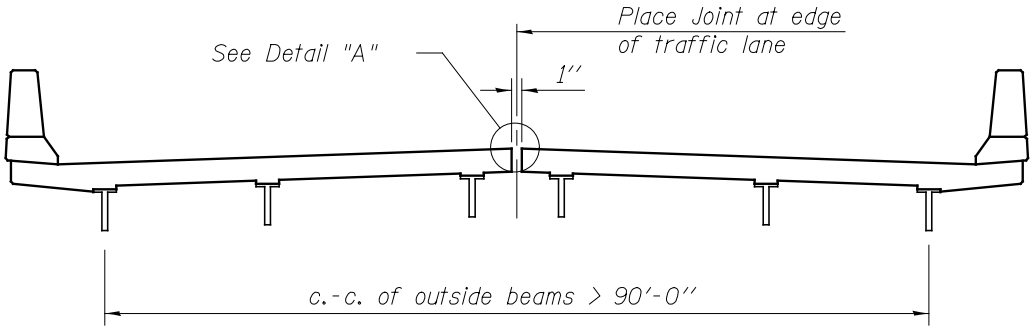

LONGITUDINAL SEPARATION JOINT

To be provided when c.-c. of outside beams is greater than 90 ft and no stage construction (see Section 3.2.7). Joint shall be sealed with Silicone Joint Sealer.

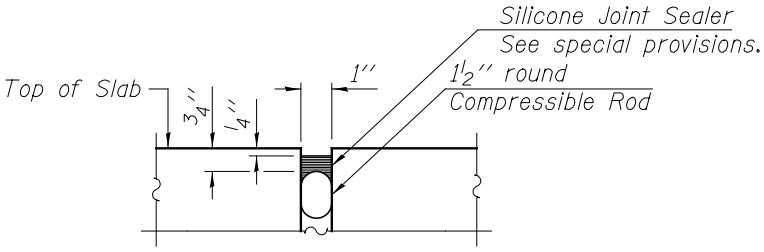

DETAIL "A"

LONGITUDINAL DECK JOINT

Figure 3.2.7-1

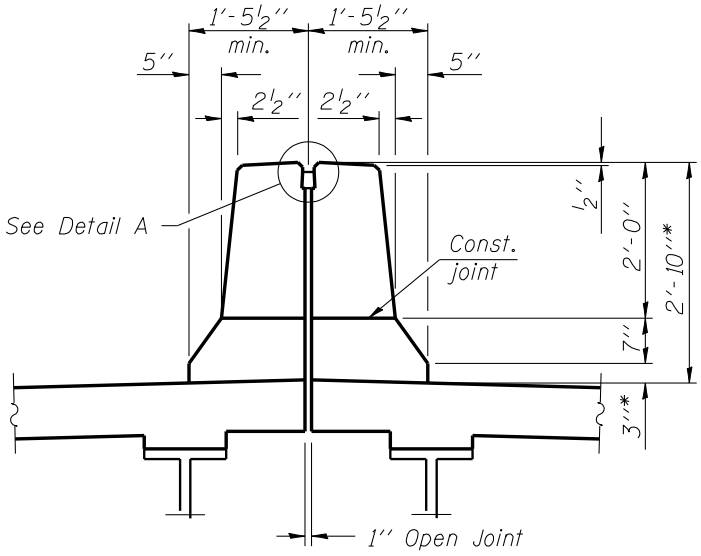

SECTION AT MEDIAN BARRIER

* - Add thickness of wearing surface when it is used

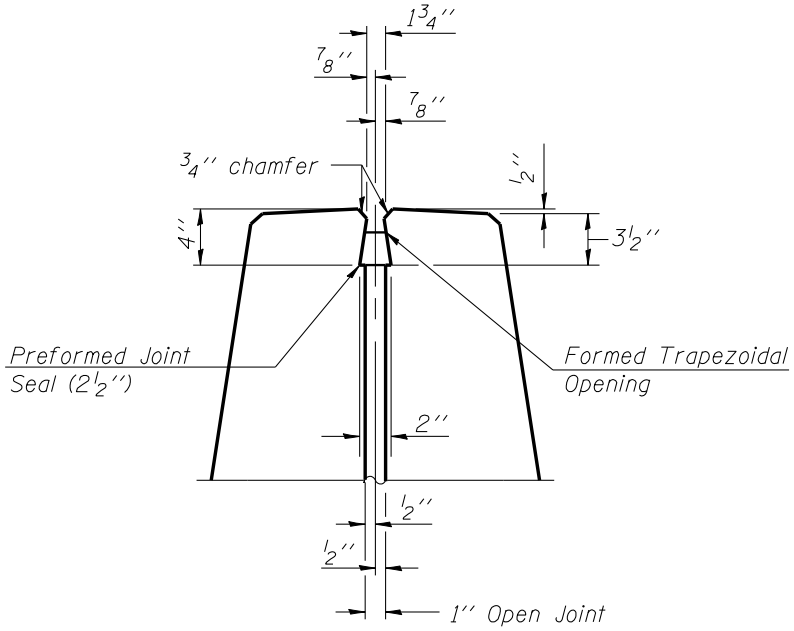

DETAIL A

LONGITUDINAL JOINT SEAL AT MEDIAN BARRIERS

Figure 3.2.7-2

3.2.8 Transverse Construction Joints

If a bridge deck pour is greater than 400 cu. yds., an optional transverse construction joint and a deck pouring sequence shall be shown on the plans. The location of this optional transverse construction joint shall be near the point of dead load contraflexure, with the day's pour terminating at the end of a positive moment area. This requirement applies to superstructures with primary beams which are steel or prestressed concrete. Figure 3.2.8-1 provides an aid for determining when a deck pouring sequence is required. If a deck pouring sequence is required, General Note #34 shall be used.

For continuous steel superstructures with a span or spans exceeding 150 ft., the positive and negative moment areas shall be poured separately, with positive moment areas being poured first. The pouring sequence and location of transverse construction joints shall be determined on an individual basis and shall be shown on the plans.

For PPC I-beam and Bulb T-beam superstructures, transverse construction joints should be avoided whenever possible. If necessary, a transverse joint should be located approximately 4 ft. from the centerline of a pier.

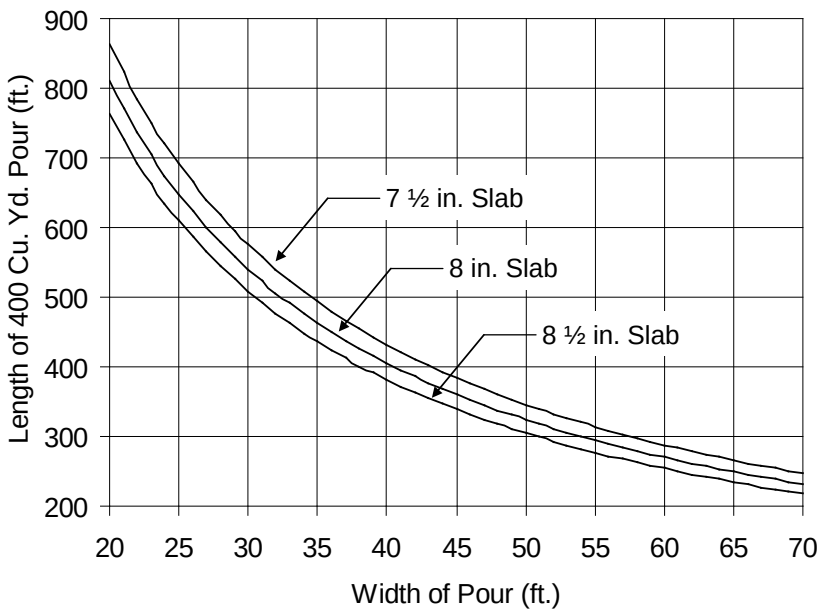

Figure 3.2.8-1

3.2.9 Deck Slab Drains and Drainage Scuppers

Floor drains may be angled if required, to clear the beam or girder flange as shown in Figure 3.2.9-1. The 4 in. x 12 in. aluminum floor drains shown in Figure 3.2.9-3 may be considered when the 6 in.ϕ drains cannot be used.

The 6 in.ϕ floor drains shown in Figures 3.2.9-1 and 3.2.9-2 shall be listed in the Bill of Materials as a pay item, i.e. Floor Drains - each.

If drainage scuppers are used in a bridge deck, they shall be detailed on the plans. Figures 3.2.9-4 to 3.2.9-9 illustrate the control dimensions and additional reinforcement in the slab for drainage scuppers DS-11, DS-12, DS-12M10, and DS-33. Base Sheets for these scuppers can be found online at the IDOT BBS web site. When necessary, it is acceptable to partially extend/embed all four scuppers into the curb of the concrete barrier. A maximum of 4 in. is allowed and shall be detailed on the plans so that removal of the grate will be permitted for cleaning.

When drainage suppers are used, the DS-11, DS-12, or DS-12M10 should be used whenever possible. The DS-33 scupper should be used only when the DS-11, DS-12 or DS-12M10 scuppers do not fit (such as for wide flange Bulb-T beams) or are not appropriate for the site.

Provide this note on all plans where applicable:

Drains shall be located clear of all diaphragms.

The color of the floor drains shown in Figures 3.2.9-1 and 3.2.9-3 should match the color of the fascia beam or girder. For treatment of drains adjacent to steel girders, see the notes in Figures 3.2.9-1 and 3.2.9-3. For treatment of drains adjacent to concrete beams, see Figure 3.2.9-2. When weathering steel is used or when painting of a structure will be delayed to a separate contract, the note given on Base Sheets S-D and S-I-D which reads "*The exterior surfaces of the floor drains...*" shall be replaced with the following note:

Floor drains need not be painted.

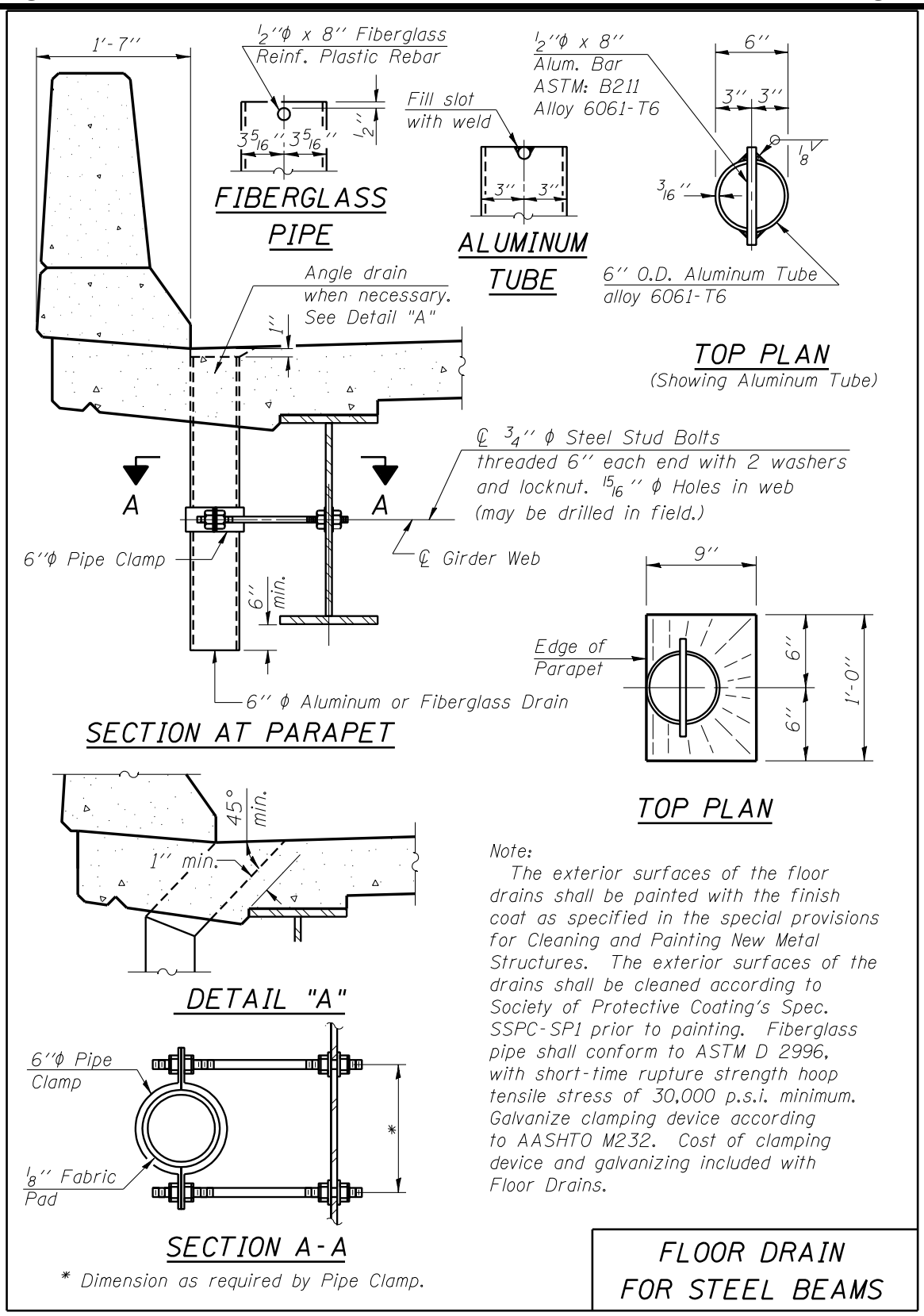
1'-7"
1/2"ϕ x 8" Fiberglass Reinf. Plastic Rebar
3 5/16" 3 5/16"
1/2"
FIBERGLASS PIPE
Fill slot with weld
3" 3"
ALUMINUM TUBE
1/2"ϕ x 8" Alum. Bar ASTM: B211 Alloy 6061-T6
6"
3" 3"
1/8
3/16"
6" O.D. Aluminum Tube alloy 6061-T6
TOP PLAN
(Showing Aluminum Tube)
Angle drain when necessary. See Detail "A"
1"
℄ 3/4" ϕ Steel Stud Bolts threaded 6" each end with 2 washers and locknut. 15/16" ϕ Holes in web (may be drilled in field.)
A
A
6"ϕ Pipe Clamp
℄ Girder Web
6" min.
6" ϕ Aluminum or Fiberglass Drain
SECTION AT PARAPET
9"
Edge of Parapet
6"
6"
1'-0"
TOP PLAN
45° min.
1" min.
DETAIL "A"
6"ϕ Pipe Clamp
1/8" Fabric Pad
*
SECTION A-A
* Dimension as required by Pipe Clamp.
Note:
The exterior surfaces of the floor drains shall be painted with the finish coat as specified in the special provisions for Cleaning and Painting New Metal Structures. The exterior surfaces of the drains shall be cleaned according to Society of Protective Coating's Spec. SSPC-SP1 prior to painting. Fiberglass pipe shall conform to ASTM D 2996, with short-time rupture strength hoop tensile stress of 30,000 p.s.i. minimum. Galvanize clamping device according to AASHTO M232. Cost of clamping device and galvanizing included with Floor Drains.
FLOOR DRAIN FOR STEEL BEAMS

Figure 3.2.9-1

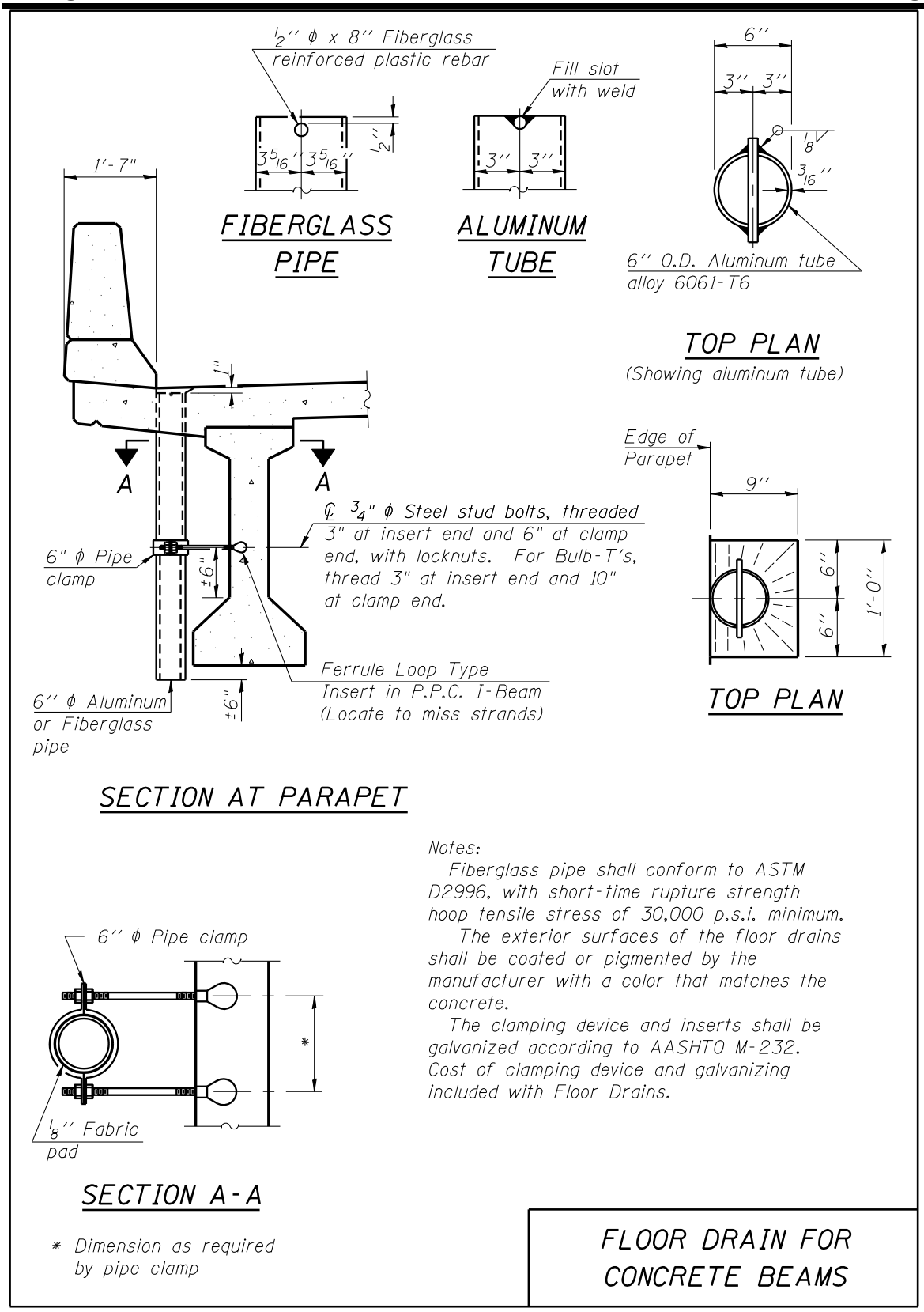
1/2'' ϕ x 8'' Fiberglass reinforced plastic rebar
3 5/16''
3 5/16''
1/2''
FIBERGLASS PIPE
Fill slot with weld
3''
3''
ALUMINUM TUBE
6''
3''
3''
1/8
3/16''
6'' O.D. Aluminum tube alloy 6061-T6
TOP PLAN
(Showing aluminum tube)
1'-7"
1"
A
A
℄ 3/4" ϕ Steel stud bolts, threaded 3" at insert end and 6" at clamp end, with locknuts. For Bulb-T's, thread 3" at insert end and 10" at clamp end.
6" ϕ Pipe clamp
±6"
Ferrule Loop Type Insert in P.P.C. I-Beam (Locate to miss strands)
6'' ϕ Aluminum or Fiberglass pipe
±6"
SECTION AT PARAPET
Edge of Parapet
9''
6''
6''
1'-0''
TOP PLAN
6'' ϕ Pipe clamp
*
1/8'' Fabric pad
SECTION A-A
* Dimension as required by pipe clamp
Notes:
Fiberglass pipe shall conform to ASTM D2996, with short-time rupture strength hoop tensile stress of 30,000 p.s.i. minimum.
The exterior surfaces of the floor drains shall be coated or pigmented by the manufacturer with a color that matches the concrete.
The clamping device and inserts shall be galvanized according to AASHTO M-232. Cost of clamping device and galvanizing included with Floor Drains.
FLOOR DRAIN FOR CONCRETE BEAMS

Figure 3.2.9-2

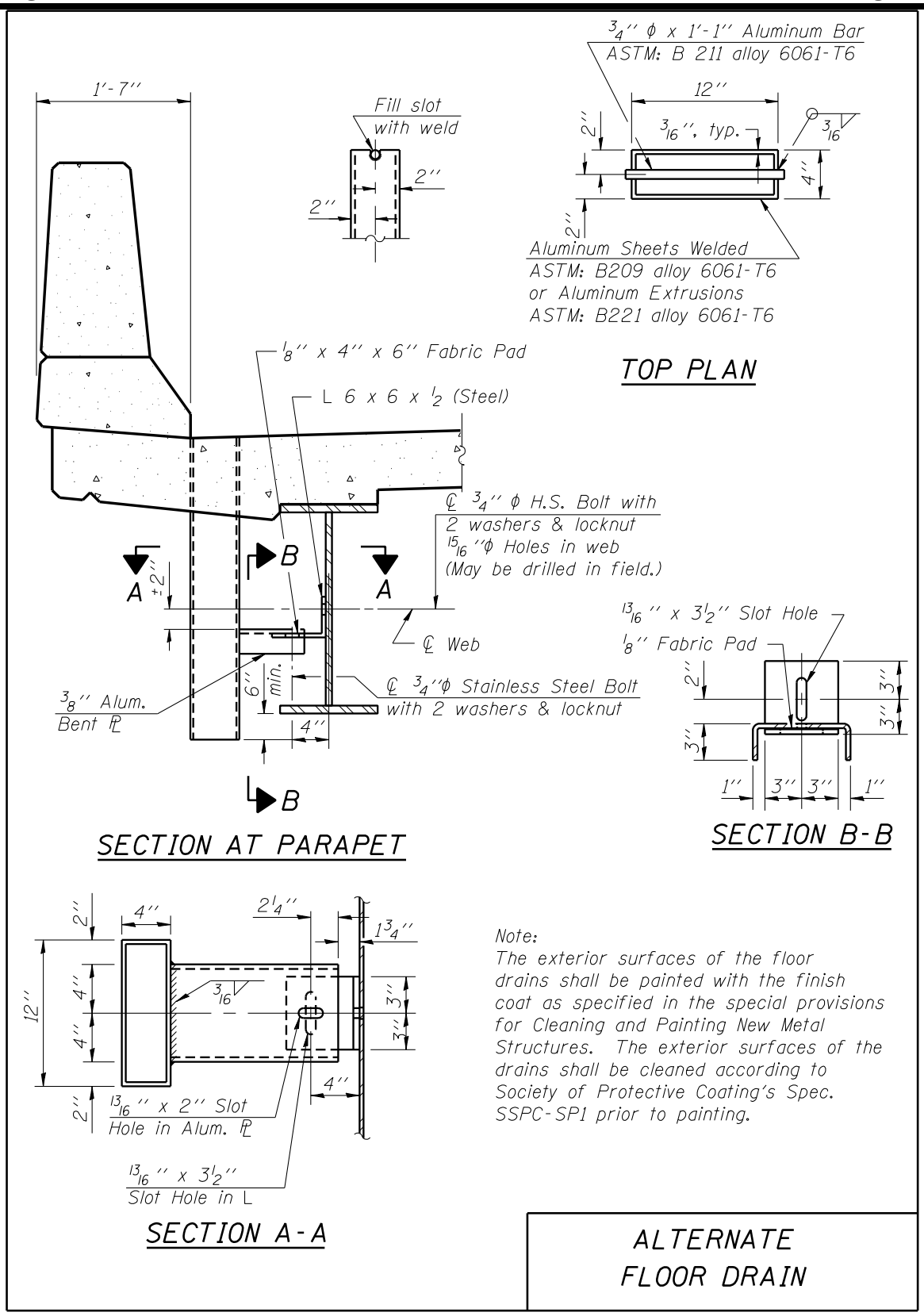
3/4'' ϕ x 1'-1'' Aluminum Bar
ASTM: B 211 alloy 6061-T6
12''
3/16'', typ.
3/16
2''
4''
2''
Aluminum Sheets Welded
ASTM: B209 alloy 6061-T6
or Aluminum Extrusions
ASTM: B221 alloy 6061-T6
TOP PLAN
1'-7''
Fill slot
with weld
2''
2''
1/8'' x 4'' x 6'' Fabric Pad
L 6 x 6 x 1/2 (Steel)
℄ 3/4'' ϕ H.S. Bolt with
2 washers & locknut
15/16''ϕ Holes in web
(May be drilled in field.)
A
±2''
B
A
℄ Web
6'' min.
℄ 3/4''ϕ Stainless Steel Bolt
with 2 washers & locknut
3/8'' Alum.
Bent ℙ
4''
B
SECTION AT PARAPET
13/16'' x 3 1/2'' Slot Hole
1/8'' Fabric Pad
2''
3''
3''
3''
3''
1''
3''
3''
1''
SECTION B-B
2''
4''
2 1/4''
1 3/4''
12''
4''
4''
3/16
3''
3''
4''
2''
13/16'' x 2'' Slot
Hole in Alum. ℙ
13/16'' x 3 1/2''
Slot Hole in L
SECTION A-A
Note:
The exterior surfaces of the floor drains shall be painted with the finish coat as specified in the special provisions for Cleaning and Painting New Metal Structures. The exterior surfaces of the drains shall be cleaned according to Society of Protective Coating's Spec. SSPC-SP1 prior to painting.
ALTERNATE
FLOOR DRAIN

Figure 3.2.9-3

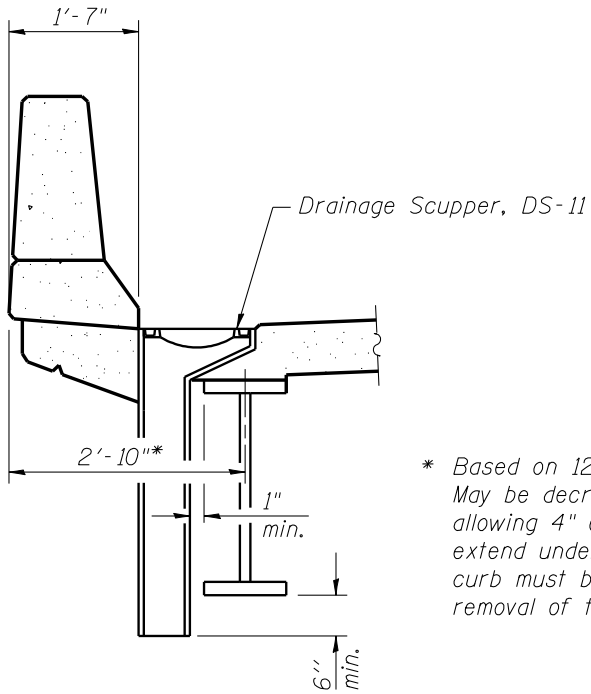

* Based on 12" flange width. May be decreased to 2'-6" by allowing 4" of scupper to extend under curb. In this case, curb must be detailed to allow removal of the grate.

SECTION A-A

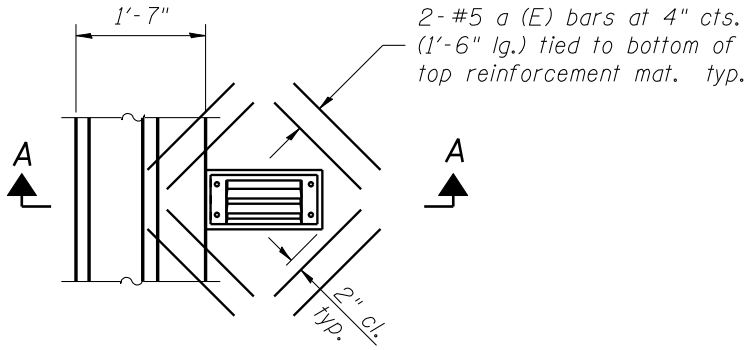

PLAN

Note:
Reinforcement bars designated (E) shall be epoxy coated.
Cut longitudinal reinforcement to clear drainage scuppers.

DRAINAGE SCUPPER
DS-11 OUTSIDE FASCIA BEAM

Figure 3.2.9-4

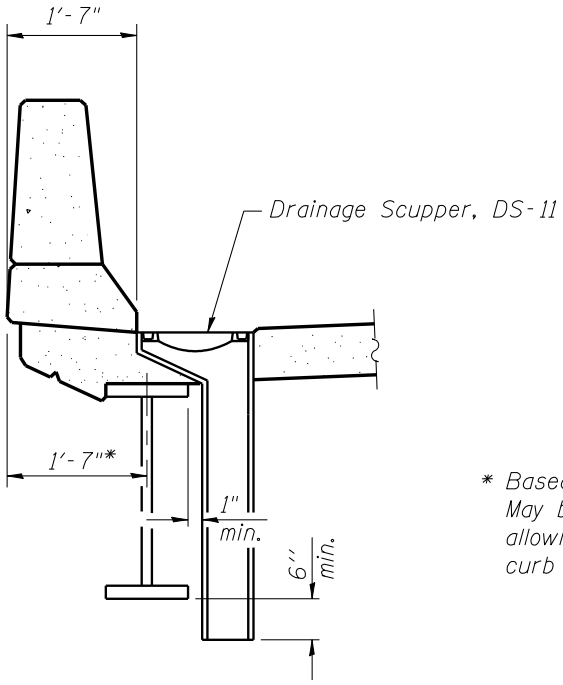

* Based on 12" flange width. May be increased to 1'-11" by allowing 4" space between curb and end of scupper.

SECTION A-A

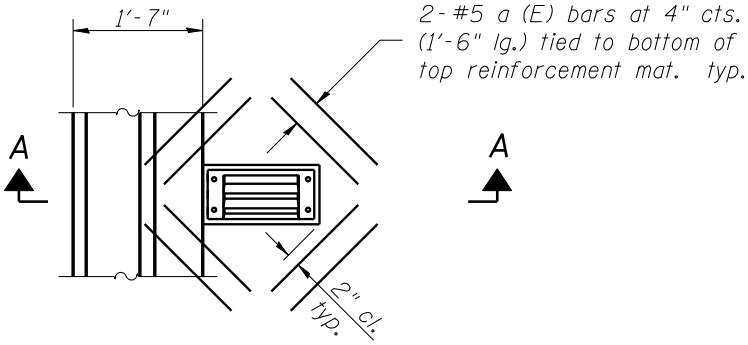

PLAN

Note:
Reinforcement bars designated (E) shall be epoxy coated.
Cut longitudinal reinforcement to clear drainage scuppers.

DRAINAGE SCUPPER
DS-11 INSIDE FASCIA BEAM

Figure 3.2.9-5

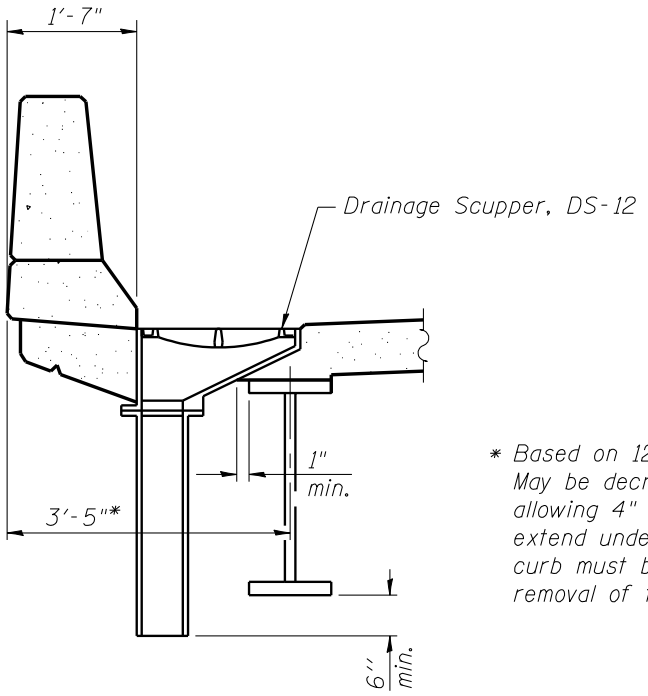

* Based on 12" flange width. May be decreased to 3'-1" by allowing 4" of scupper to extend under curb. In this case, curb must be detailed to allow removal of the grate.

SECTION A-A

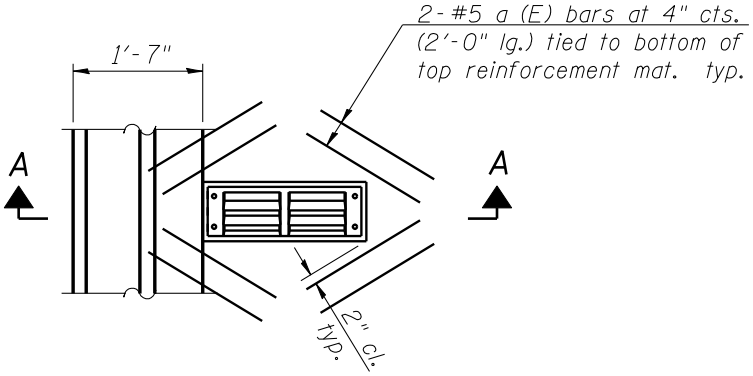

PLAN

Note:
Reinforcement bars designated (E) shall be epoxy coated.
Cut longitudinal reinforcement to clear drainage scuppers.

DRAINAGE SCUPPER
DS-12 OUTSIDE FASCIA BEAM

Figure 3.2.9-6

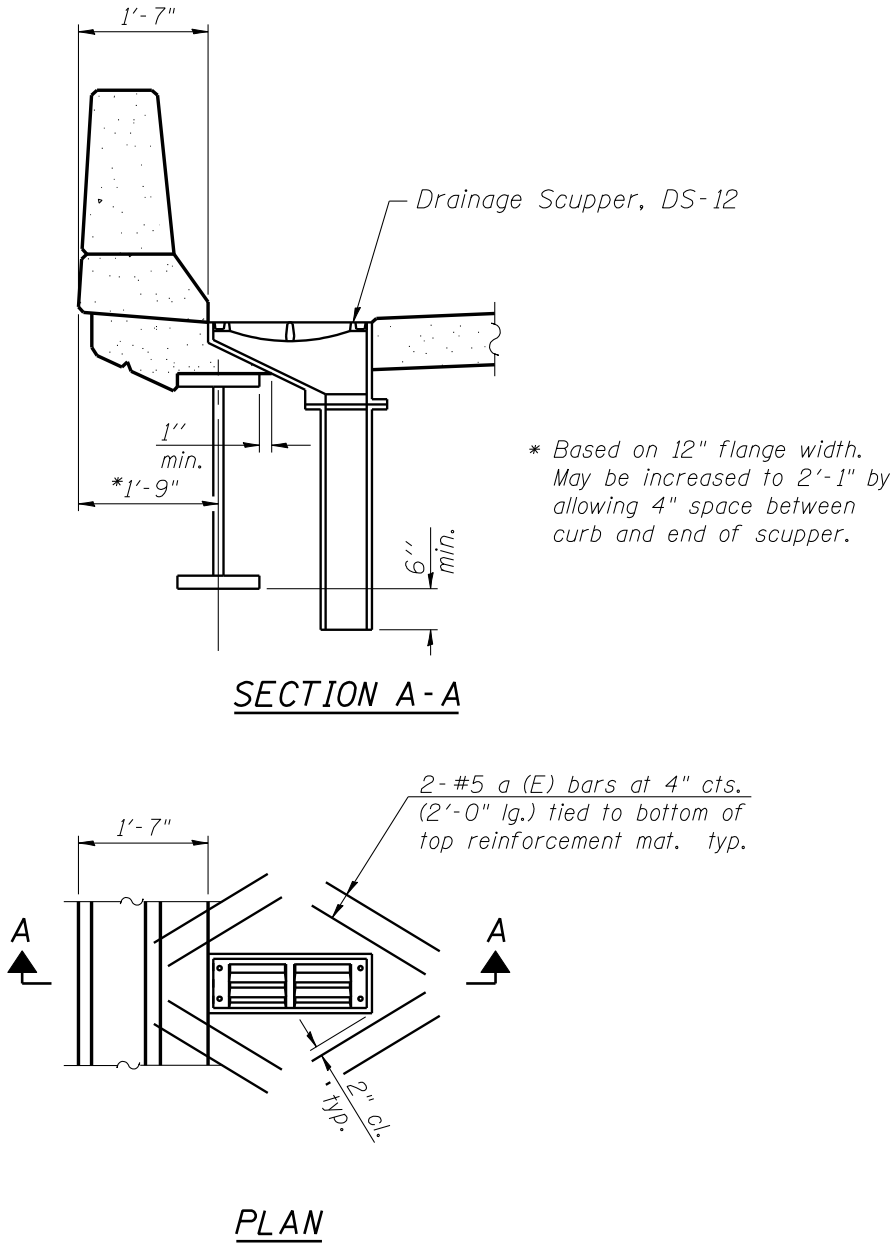

Note:
Reinforcement bars designated (E) shall be epoxy coated.
Cut longitudinal reinforcement to clear drainage scuppers.

DRAINAGE SCUPPER
DS-12 INSIDE FASCIA BEAM

Figure 3.2.9-7

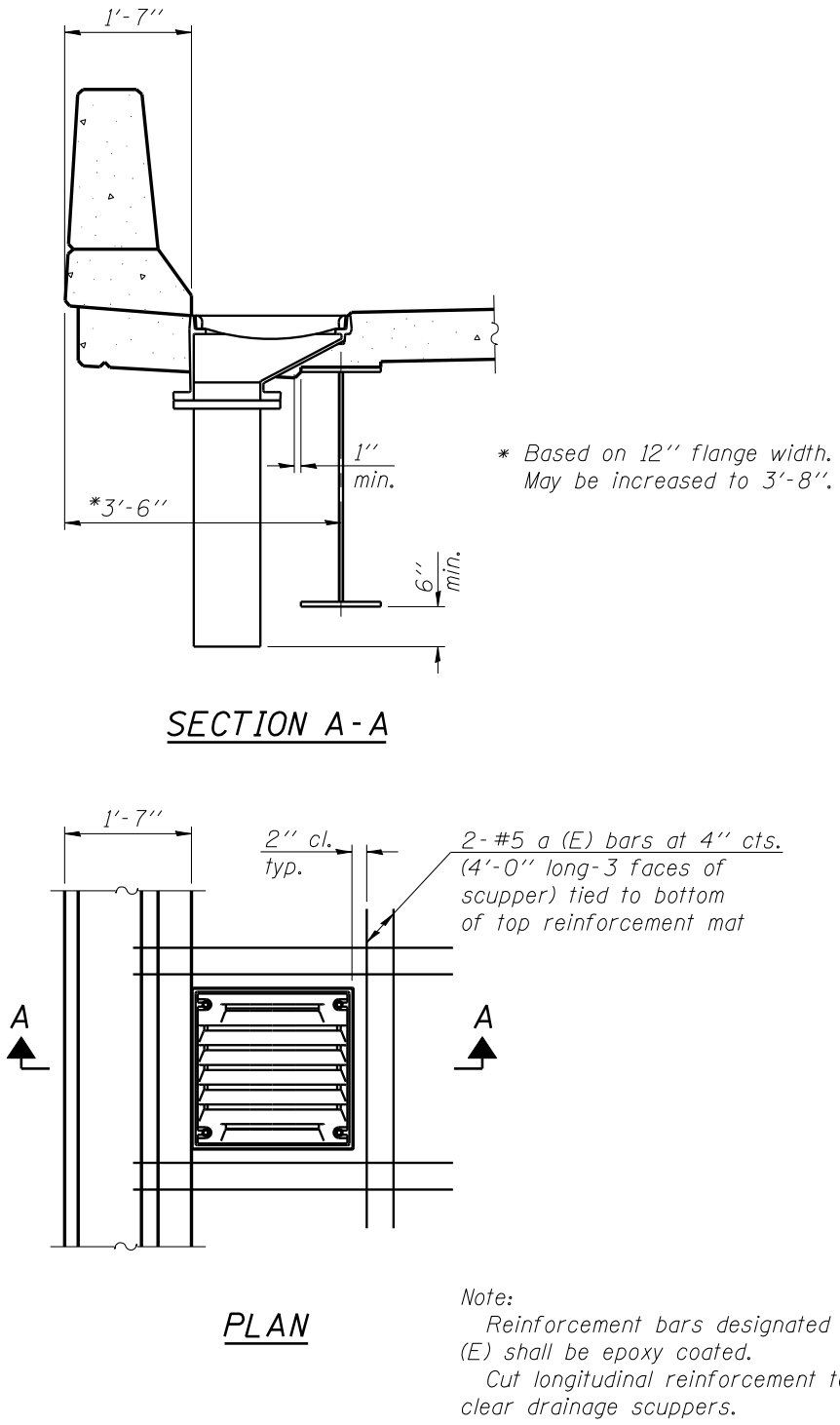
1'-7''
1''
min.
*3'-6''
6''
min.
* Based on 12'' flange width.
May be increased to 3'-8''.
SECTION A-A
1'-7''
2'' cl.
typ.
2-#5 a (E) bars at 4'' cts.
(4'-0'' long-3 faces of
scupper) tied to bottom
of top reinforcement mat
A
A
PLAN
Note:
Reinforcement bars designated
(E) shall be epoxy coated.
Cut longitudinal reinforcement to
clear drainage scuppers.
DRAINAGE SCUPPER
DS-12M10

Figure 3.2.9-8

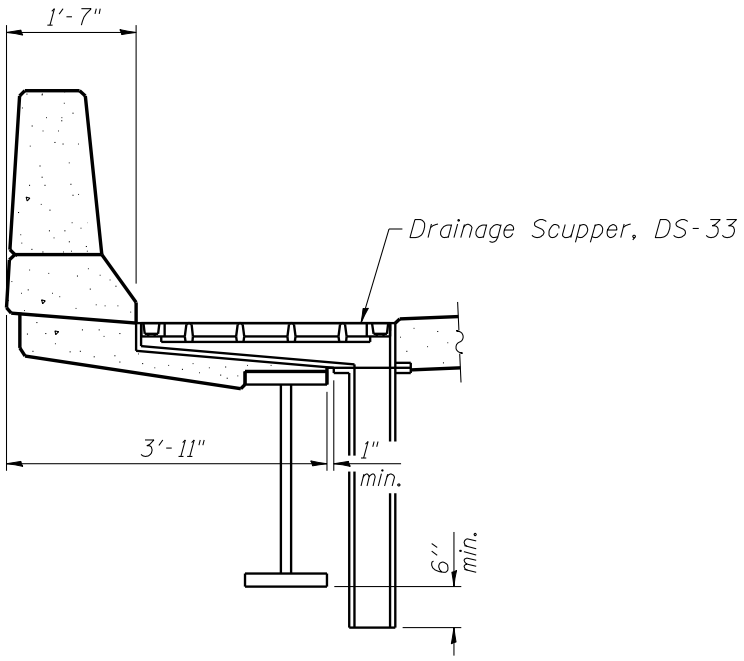

SECTION A-A

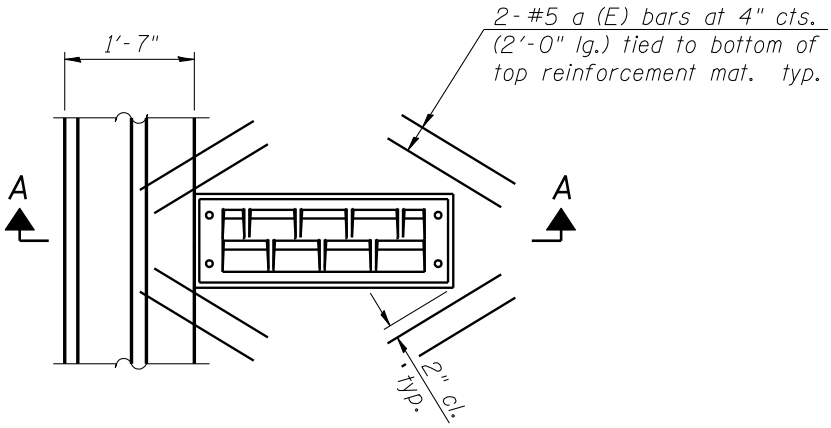

PLAN

Note:
Reinforcement bars designated (E) shall be epoxy coated.
Cut longitudinal reinforcement to clear drainage scuppers.

DRAINAGE SCUPPER
DS-33

Figure 3.2.9-9

3.2.10 Light Poles and Parapet Conduit

Details for light poles mounted on bridge parapets are depicted in Figures 3.2.10-1 through 3.2.10-3. Light poles mounted on structures which are not subject to live load vibrations, such as retaining walls, will not require vibration isolation pads. In these cases only 5½ in. of anchor rod extension out of the concrete is necessary for the connection.

The preferred location for conduit is attached to beams or the bottom of the deck. Figure 3.2.10-1 illustrates details for these situations. If necessary, conduit may be placed in the parapet curb as shown in Figure 3.2.10-2, provided the following criteria are met:

1. Only conduit accommodating lighting or other traffic related utilities may be placed in the parapets.
2. The conduit shall be PVC pipe, Sch. 40 minimum wall.
3. The maximum single conduit diameter shall be a standard 2 in. conduit (2 3/8 in. O.D.).
4. A maximum of two single conduits may be used.
5. The conduit shall be placed in the lower curb portion of the parapet.
6. All conduit encased in a parapet shall have a minimum clearance of 1½ in. from all reinforcement.
7. Conduit and other electrical components depicted on the bridge plans should not be included in the bridge Bill of Materials and should not be included in Concrete Superstructure. Rather, these components should be paid for elsewhere in the contract with a note on the bridge plans indicating in what portion of the contract (Electrical, Roadway, etc.) the components will be paid.

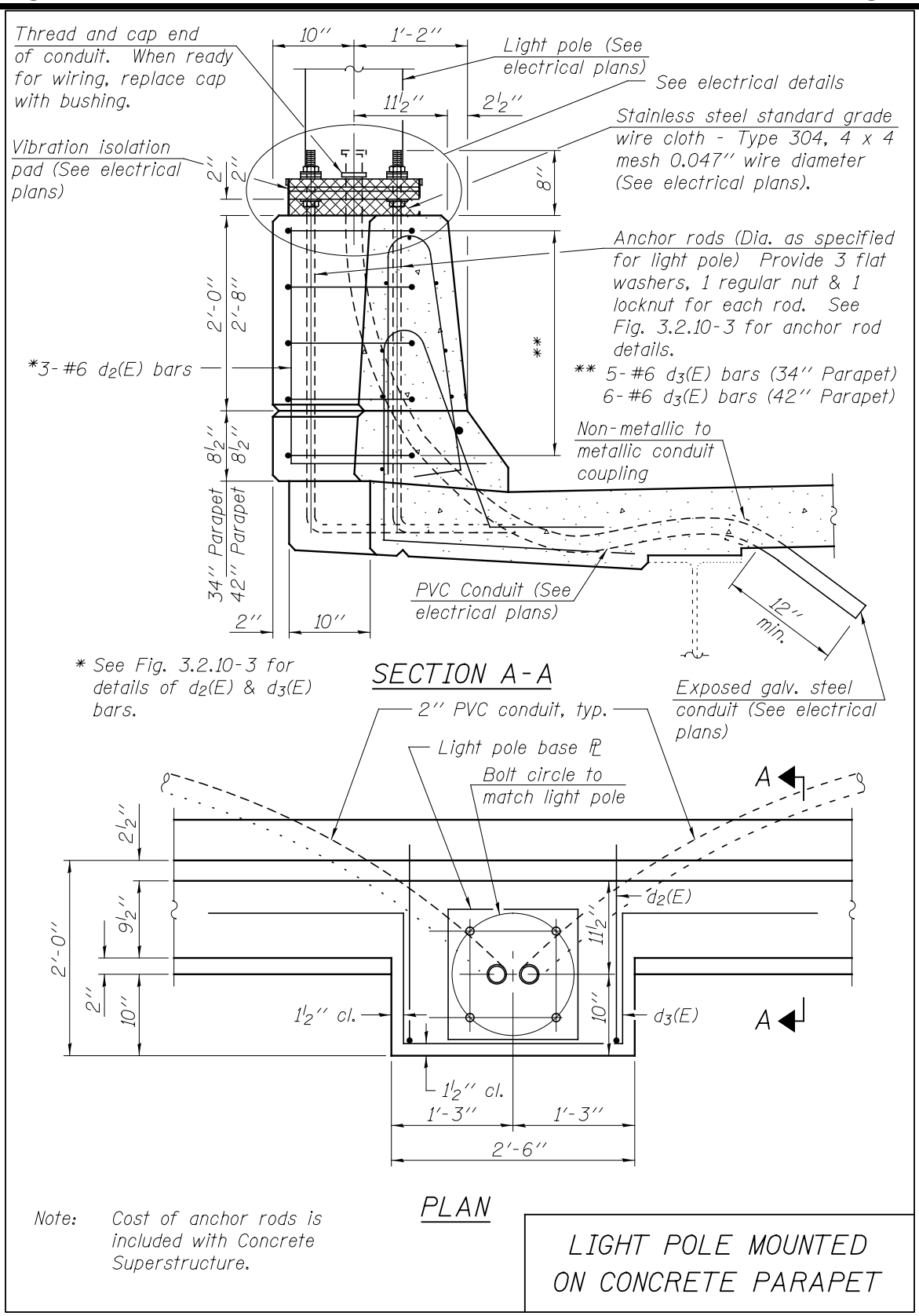

Figure 3.2.10-1

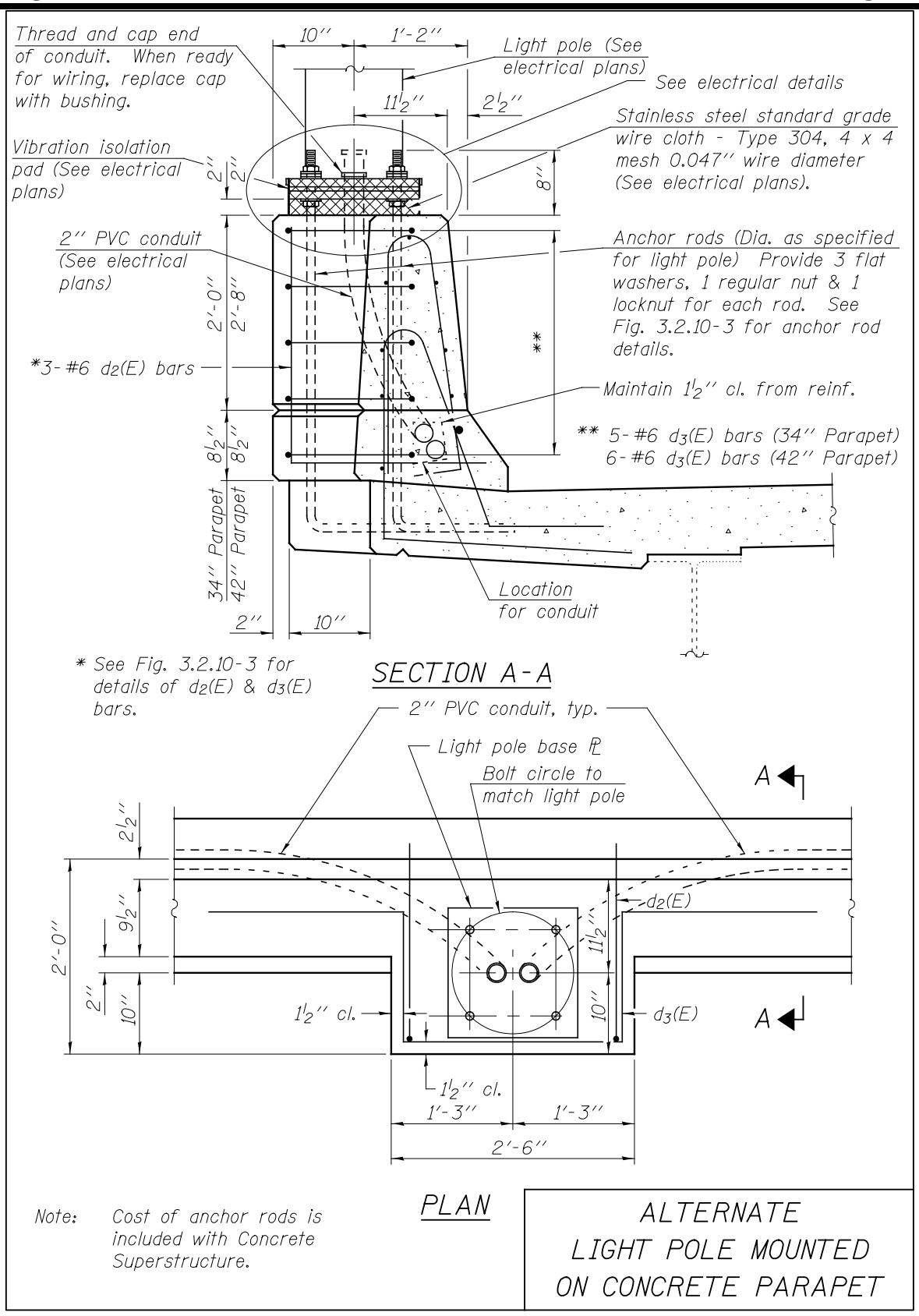

Figure 3.2.10-2

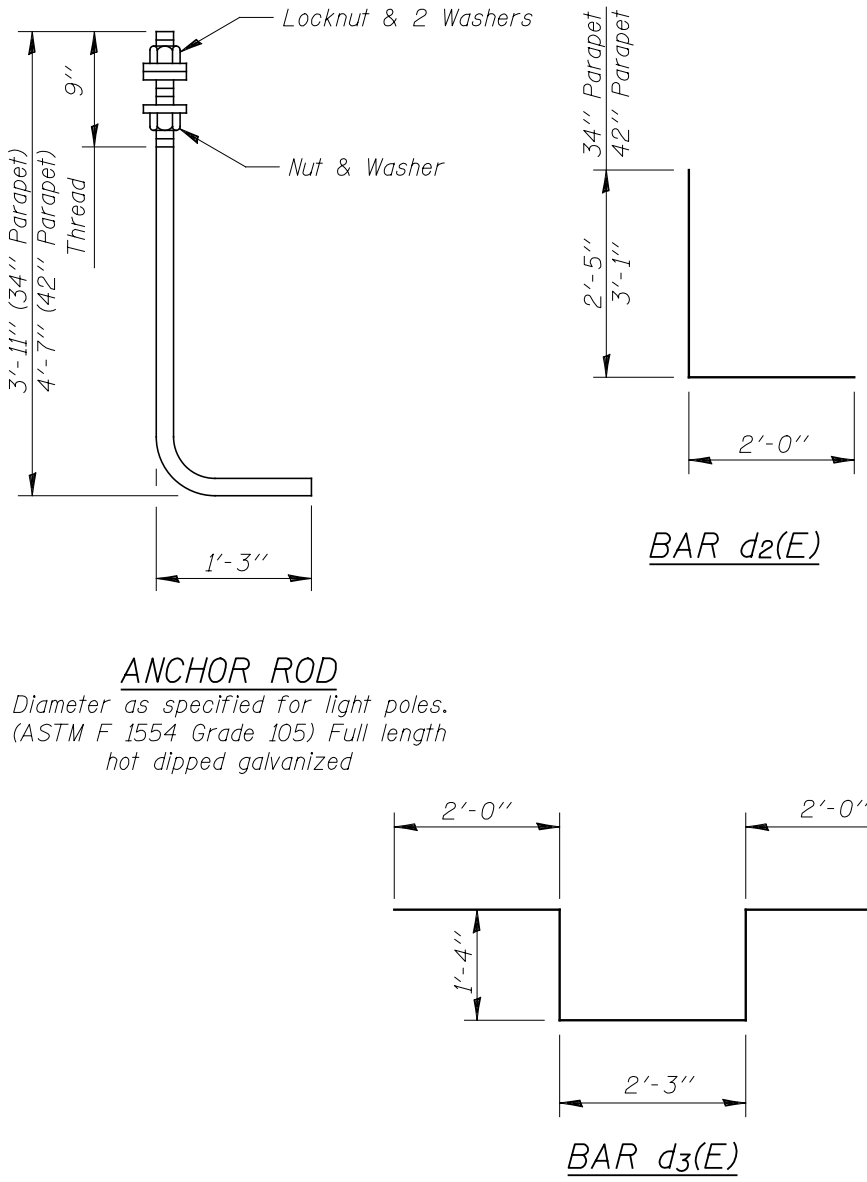

LIGHT PEDESTAL
REINFORCEMENT

Figure 3.2.10-3

LRFD and LFD

LRFD Articles 5.7.3.3.1-1 and 5.5.4.2.1 contain provisions for over-reinforced concrete slabs and beams. When specified reinforcement is excessive, the normal ϕ factor of 0.9 should be reduced.

Skewed slab structures are generally designed for main reinforcement placed parallel to the centerline of roadway for continuous bridges and when the aspect ratio (width to length) is less than 3 for simple spans. The design span should be taken as the distance along the centerline of the roadway. Checking for an over-reinforced slab is straightforward for these cases.

Skewed simple spans with an aspect ratio greater than or equal to 3 may be designed to span the direct perpendicular distance between supports. When using this method, the main reinforcement shall be initially designed as if it was at right angles to the supports. The resulting required area of reinforcement per ft., if placed parallel to the centerline of roadway, shall then be multiplied by the secant of the skew angle squared ($A_s/\text{ft.} \times \sec^2 \theta_{skew}$). The spacing of this amplified steel area is perpendicular to the direction of travel. Consequently, a further transformation is required if the bars are detailed (spacing shown on the plans) parallel to the skew. When checking if the slab is over-reinforced, the original area of steel should be used, not the amplified area.

All bridge deck reinforcement bars shall be epoxy coated. In addition, all bars in parapets, sidewalks and medians shall be epoxy coated. No full-depth vertical parapet joints shall be provided in the negative moment areas of continuous slabs.

If the out-to-out width of the superstructure exceeds 45 ft. – 0 in., an open longitudinal joint as shown in Figures 3.2.11-1 and 3.2.11-4 is required. However, if staged construction is being utilized, a joint may not be necessary. Consult the Bureau of Bridges and Structures when this situation arises.

LRFD

Figures 3.2.11-1 through 3.2.11-3 present details and general placement of reinforcement for slab superstructures. References to appropriate articles of the LRFD Specifications for slab bridge design are also included. According to Article 9.7.1.4, edges of slabs shall either be strengthened or be supported by an edge beam which is integral with the slab. As depicted in Figure 3.2.11-1, the #5 d_1 bars which extend from the 34 in. F-Shape barrier into the slab qualify as shear reinforcement (strengthening) for the outside edges of slabs. When a 34 in. or 42 in. F-Shape barrier (with similar d_1 bars) is used on a slab bridge, its structural adequacy as an edge beam typically only needs to be verified. The barrier should not be considered structural. Additional #6 bars, 6'-6" in length, shall be placed between the top #5 a bars to help satisfy Extreme Event "crash" loading. Edge beam design is required for bridges with open joints and possibly at stage construction lines.

When the main slab reinforcement meets the LRFD design requirements for strength, fatigue, crack control, and limits and development of reinforcement; the minimum slab depth criteria specified in LRFD Table 2.5.2.6.3-1 is not applicable.

LFD

Figures 3.2.11-4 through 3.2.11-6 present details and general placement of reinforcement for slab superstructures. References to appropriate articles of the Standard Specifications for slab bridge design are also included. As depicted in Figure 3.2.11-4, the #5 d_1 bars which extend from the 34 in. F-Shape barrier into the slab qualify as shear reinforcement (strengthening) for the outside edges of slabs. When a 34 in. or 42 in. F-Shape barrier (with similar d_1 bars) is used on a slab bridge, its structural adequacy as an edge beam should be verified. The barrier should not be considered structural. Additional #6 bars for crash loading are not necessary for LFD slab bridges, as the LFD code requirements for this loading are much less strict. Edge beam design is required for bridges with open joints and possibly at stage construction lines.

The minimum concrete bridge slab thickness requirements of AASHTO LFD Table 8.9.2 shall not be applicable to concrete slabs that meet the serviceability requirements of LFD Articles 8.16.8.3 and 8.16.8.4.

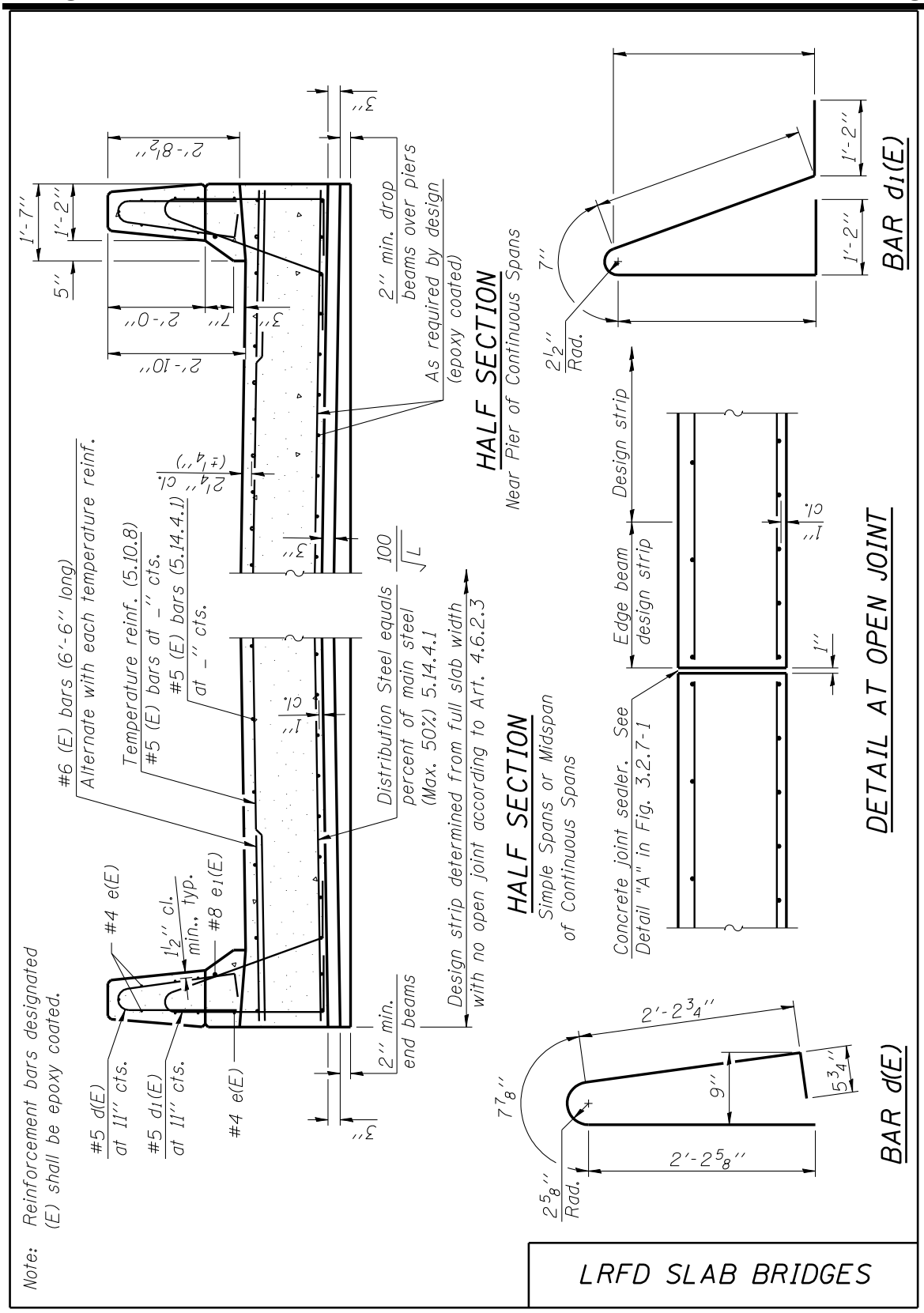

Figure 3.2.11-1

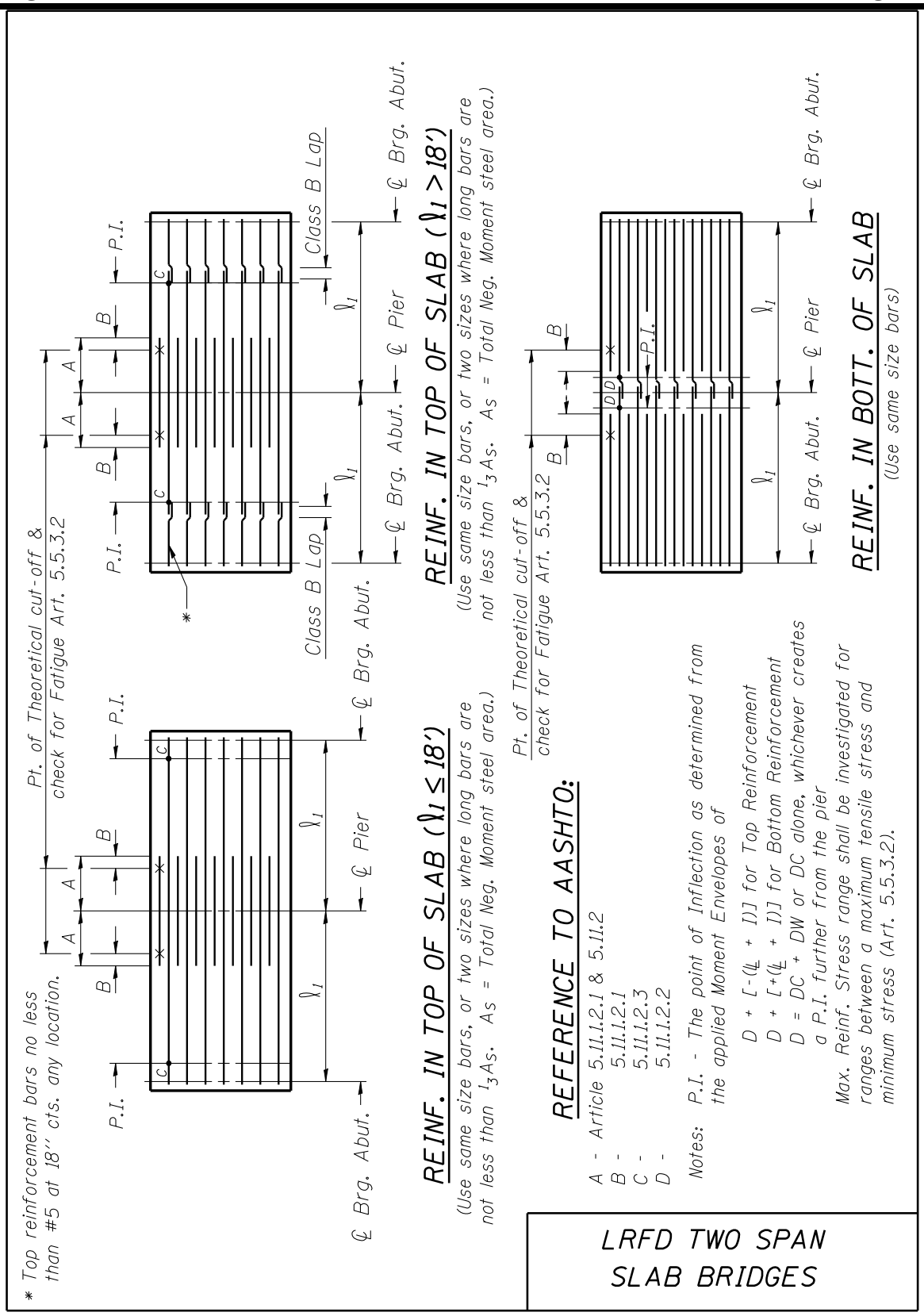

Figure 3.2.11-2

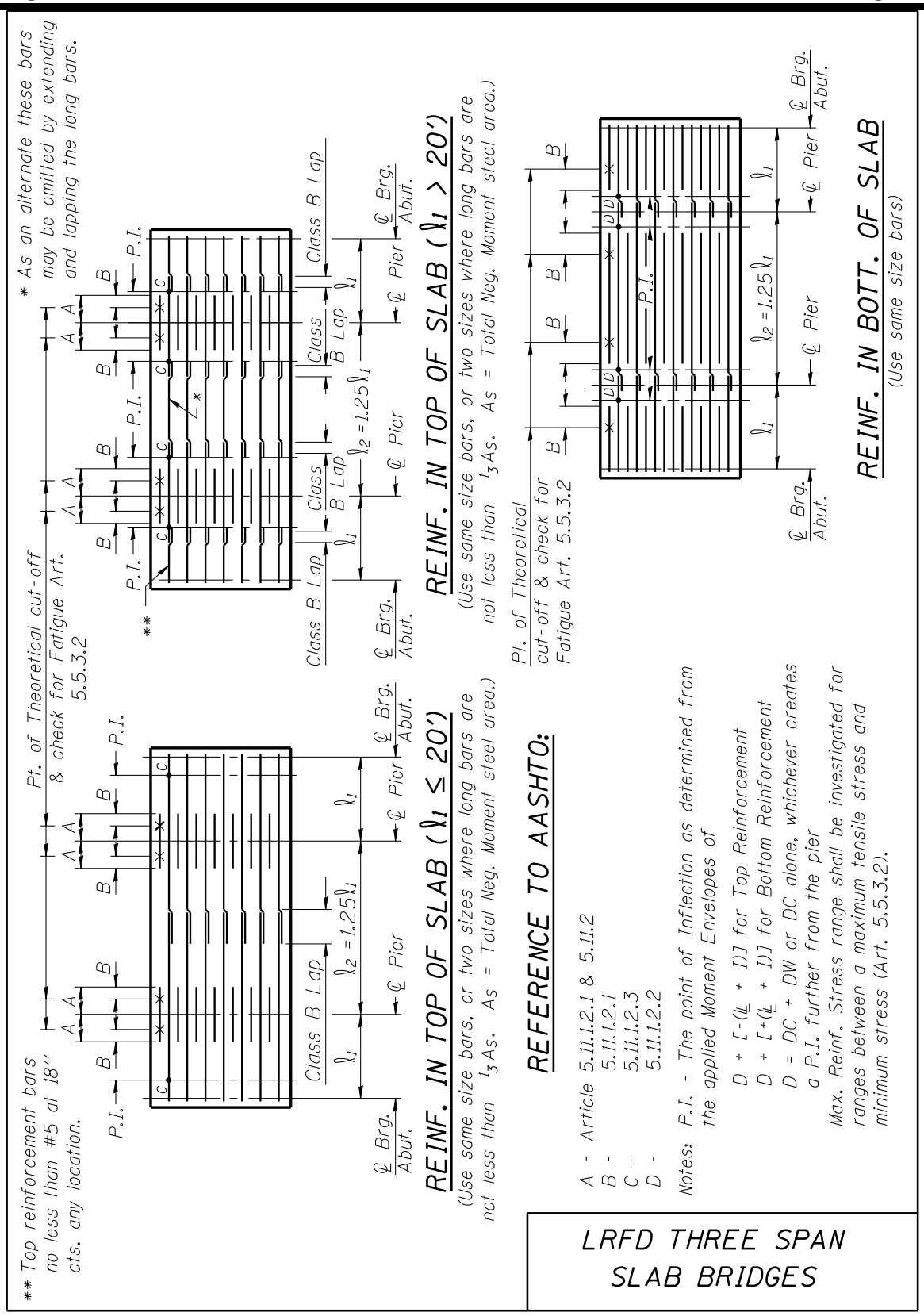

Figure 3.2.11-3

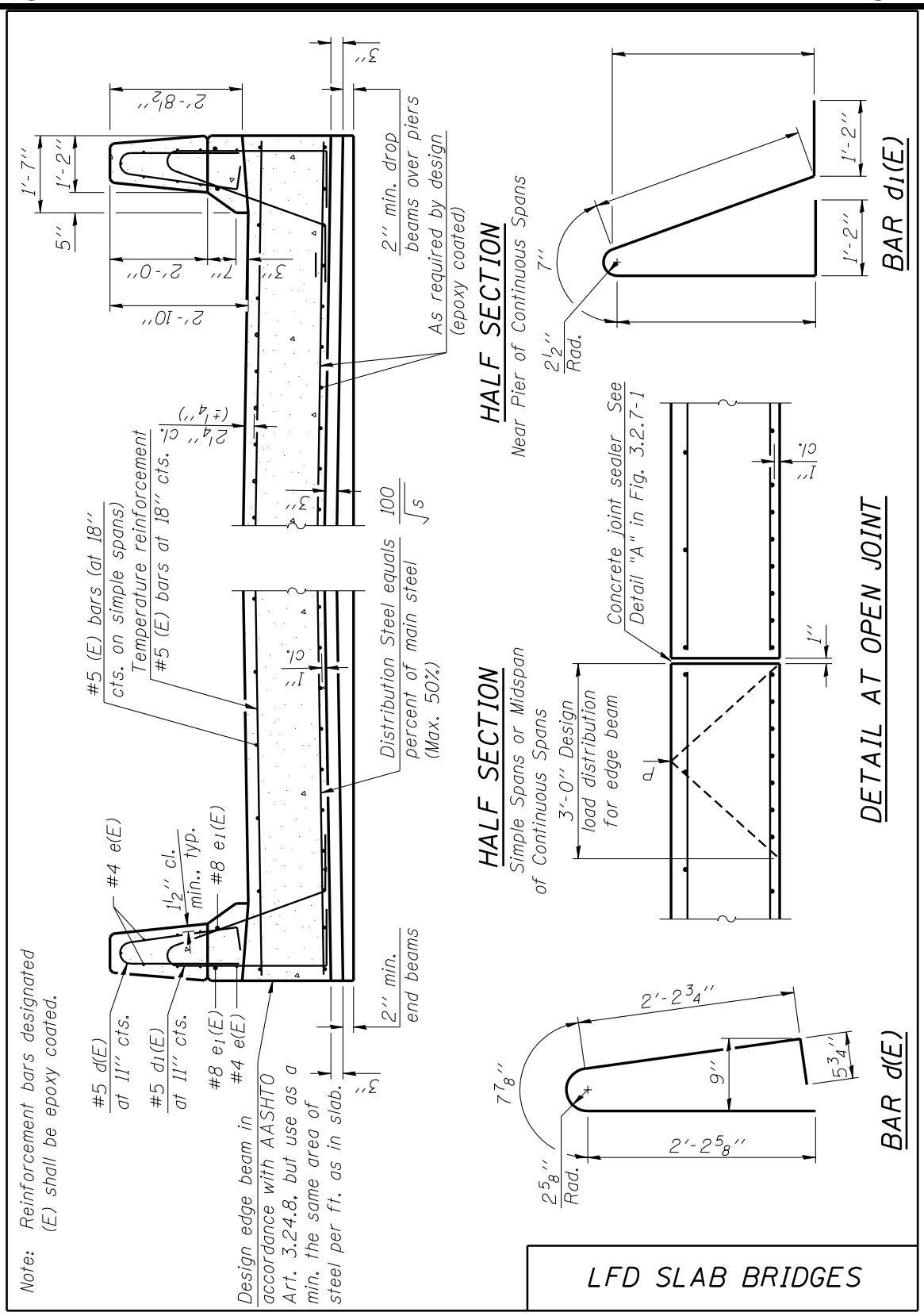

Figure 3.2.11-4

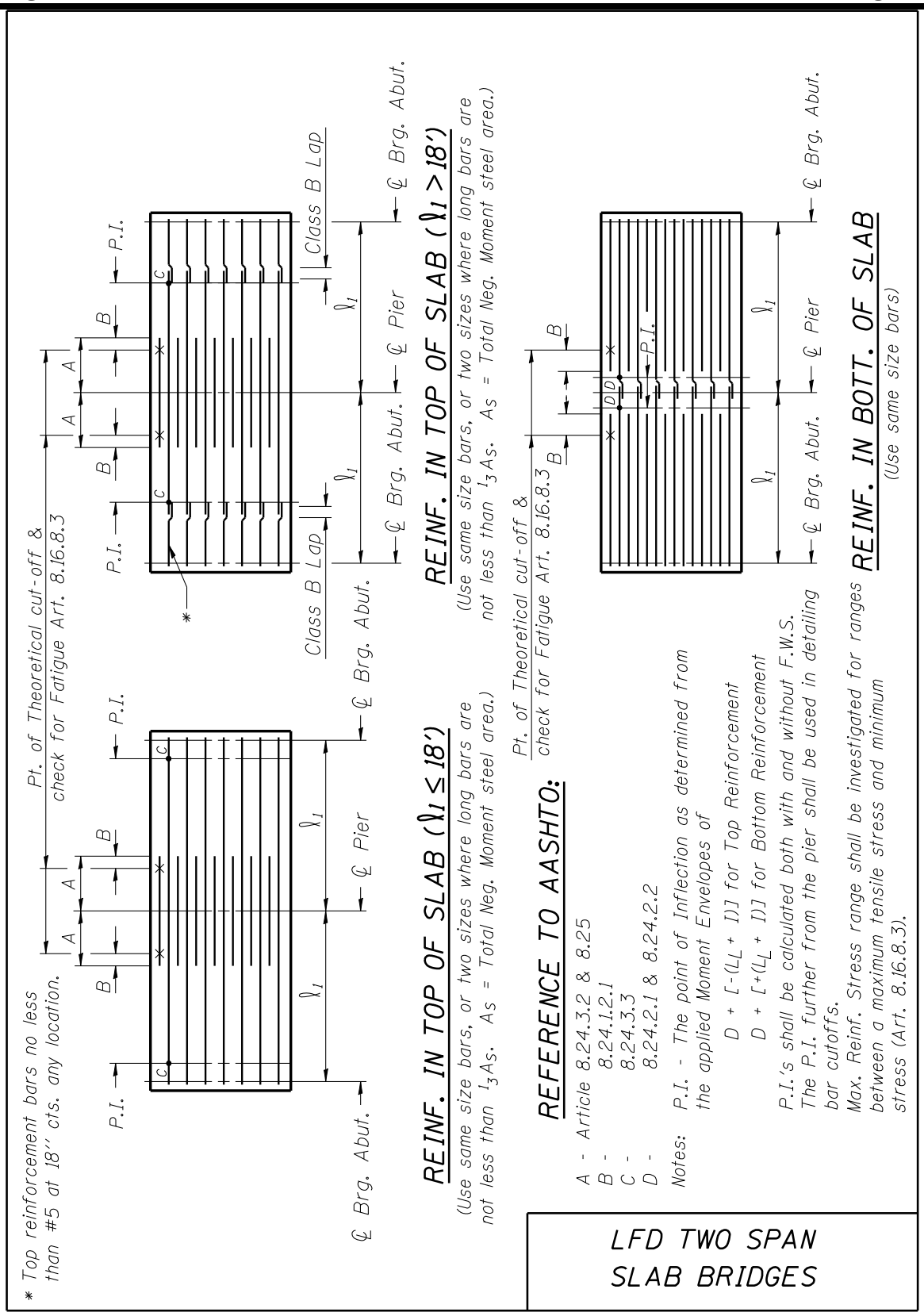

Figure 3.2.11-5

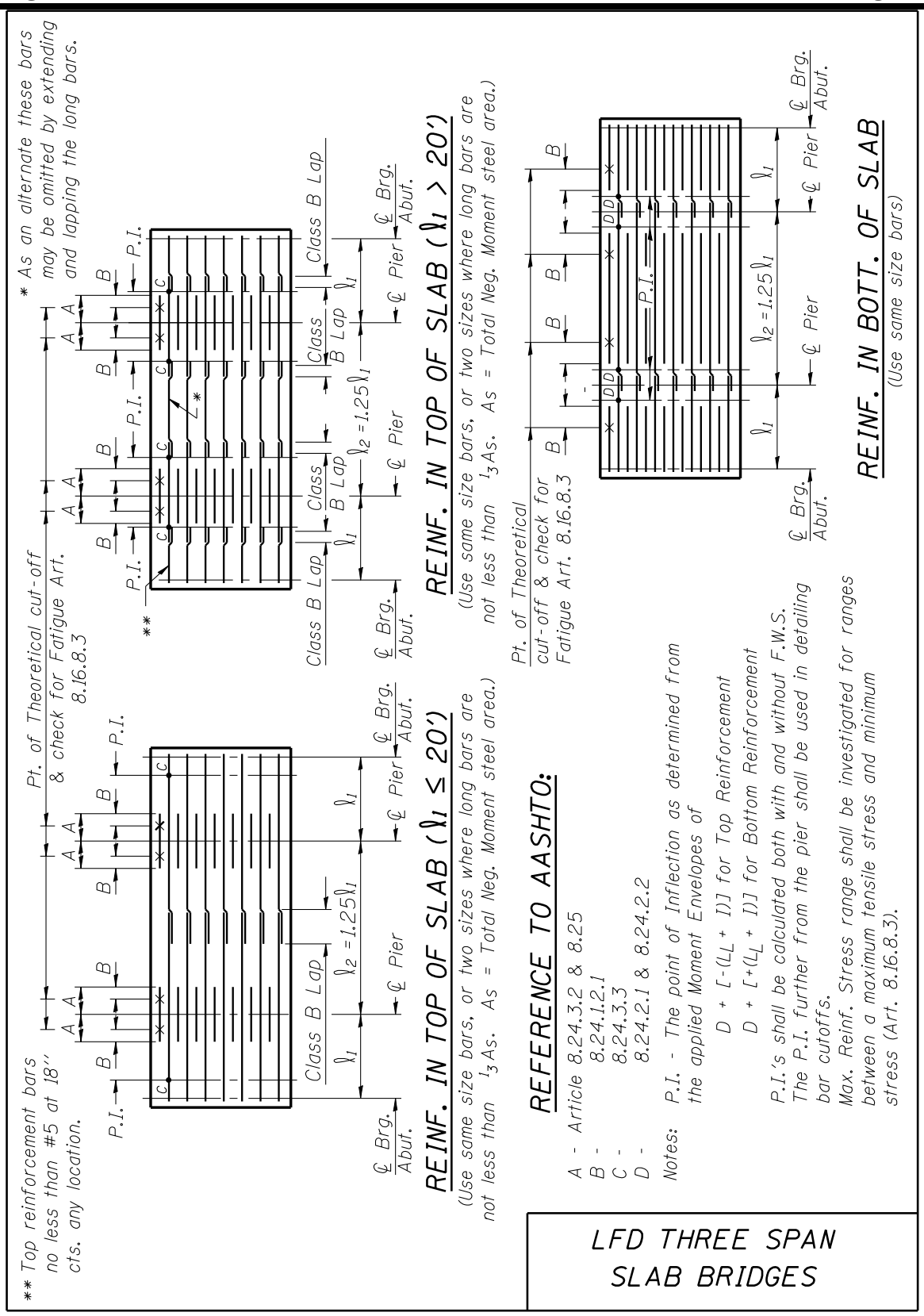

Figure 3.2.11-6

3.2.12 Bridge Approach Slabs and Approach Footings

LRFD and LFD

Base sheets BA-0, BA-L, and BA-R provide details for standard IDOT bridge approach slabs and approach footings. The reinforcement in these details has been standardized. The main reinforcement is staggered to avoid congestion of the hooked bars at the ends of the slab. Transverse reinforcement is placed parallel to skew to avoid cutting the majority of bars in skewed bridges.

The bridge approach slab parapets are crashworthy to a Test Level 4. Additional #6 bars at 15 inch centers have been added to strengthen the slab to satisfy Test Level 4 requirements.

Except for slab bridges and deck beam bridges, longitudinal bar splicers shall be spliced to top longitudinal reinforcement over the construction joint between the end of the bridge and the approach slab to prevent it from opening. Transverse bar splicers shall be used across stage construction joints.

The following assumptions were made in designing the bridge approach slabs and approach footings:

- AASHTO LRFD 4th Edition, HL-93 Loading
- f'_c = 3.5 ksi
- f_y = 60 ksi
- Approach Slab Span Length = 26 ft. – 1 in.
- Bottom of Slab Clear Cover = 2 in.
- Simply Supported Behavior
- Slab Bridge Live Load Distribution (AASHTO LRFD Article 4.6.2.3)
- One-Way Slab Behavior in each direction of the Approach Footings
- Flexible foundation model for the Approach Footings, Q_u > 1.0 tsf

Bridge approach slabs shall receive the same surface treatment as the bridges to which they are attached. For example, if the bridge has Bridge Deck Grooving and Protective Coat, the approaches shall receive the same treatment according to Section 503 of the Standard Specifications.

When approach slab parapets are shown on the TSL, they shall be detailed as extending to a distance of 15 feet behind the back wall of the abutment (unless otherwise specified on the TSL). Beyond this point, appropriate guard rail terminals shall be used. Approach slabs shall be detailed as extending full width under parapets, with no parapet overhang. Guard rail terminals need not be shown on approach slab sheets. When an open joint occurs at an abutment, parapets shall be detailed according to the applicable details in Section 3.6 of the Bridge Manual, including the point block and sliding plate details of Figure 3.6.2.1-5 if necessary. When integral or semi-integral abutments are present, the parapets shall have parapet joints at the back of the abutment according to Figure 3.2.4-10. These joints shall be placed perpendicular to the roadway and include the aluminum joints in the base of the parapets. The additional aluminum joint requirements for long spans given in Figures 3.2.4-6 and 3.2.4-7 need not be followed at abutments.

When side-mounted railings are shown on the TSL, they shall extend onto the approaches for a distance of 15 feet (unless otherwise specified on the TSL). The connection into the approach slab shall be the same as that used on the bridge and as that specified on the applicable railing base sheet. Minor modifications to the applicable railing base sheet may be required to detail the approach slab connection. Beyond the end of railing, guard rail terminals will be used. Guard rail terminals need not be shown on approach slab sheets. When an open joint occurs at an abutment, rail splices shall be detailed at these locations. When integral or semi-integral abutments are present, rails shall be shown as having splices at the backs of abutments.

Corbels shall extend to the full width of the abutments. This detail is typically shown on the superstructure plan sheet.

When parallel wingwalls are present, the wingwalls and parapets shall be the lengths required by Section 2.3.6.3.3 of the Bridge Manual or as shown on the TSL.

When shoulder inlets with curbs (Highway Standard 610001) are required by the TSL plan, they shall be shown on the bridge approach slab sheets with a reference to the roadway plans for quantities.

Bridge approach footings are detailed 10 in. thick and level out to out. However, when the roadway is superelevated such that the distance between the bottom of the bridge approach slab and the top of the 10 in. footing exceeds one foot, the footing may be placed parallel to the bottom of the bridge approach slab.

Three examples of bridge approach slab details are available at the following link: http://www.idot.illinois.gov/doing-business/procurements/engineering-architectural-professional-services/consultants-resources/index. Example one shows a skewed bridge with parapets, jointless abutments, and shoulder inlets with curbs. Example two shows a non-skewed bridge with side-mounted bridge rails. Example three shows a bridge with parallel wingwalls utilizing Highway Standard 609006.

3.3 Structural Steel

3.3.1 Distribution of Loads to Beams and Girders

LRFD

The provisions for distributing vehicular loads to primary bridge beams/girders are considerably more complex in the AASHTO LRFD Bridge Design Specifications than those of the Standard Specifications or LFD. The pertinent Articles in LRFD are 3.6 and 4.6.2.2.

For the strength, extreme event and service limit states, the live load distribution factor for the appropriate number of design lanes loaded should always be calculated. Where there will be only one lane during stage construction, the one design lane loaded distribution factor should also be checked. The maximum value shall govern. The provisions of 4.6.2.2.2d for beam slab cross-sections with diaphragms or cross-frames shall not apply for typical bridges utilized by IDOT because the diaphragms and/or cross-frames are not designed to ensure a rigid cross-section capable of rotating or deflecting as a unit.

For the fatigue limit state (including the fatigue calculations for stud shear connector design), the one design lane loaded distribution factor should be used for the final cross-section.

The Bureau of Bridges and Structures has developed simplifications for live load distribution for moments, shears and reactions that may be used for typical IDOT bridges. These simplifications may be used for both interior and exterior beams/girders in lieu of the equations in LRFD when the following criteria are met:

i.) The cross-section fits case a, e or k in LRFD Table 4.6.2.2.1-1.
ii.) There are at least 5 beam/girder lines in the final cross-section.
iii.) The beams/girders are straight or considered equivalently straight as defined in Section 3.3.9.
iv.) The slab thickness is at least 7.5 in.
v.) The beam/girder spacing is between 3.5 ft and 12 ft.
vi.) The span length is between 20 ft and 240 ft.
vii.) The concrete overhang, measured from the centerline of the beam to the outside edge of the parapet at the exterior beam/girder, is equal to or less than the following:

a) 3 ft. – 8 in. (4 ft. – 6 in. for Bulb T-Beams) for concrete parapets and curb mounted steel railing
b) 2 ft. – 1 in. for Type S-1 Railing
c) 2 ft. – 1 in. for Type SM Railing without curb
d) 2 ft. – 1 in. for Type SM Railing with curb

For moments, the following simplified live load distribution equations may be used for structures meeting the criteria above:

$$g_m = 0.075 + C \times \left(\frac{S}{9.5}\right)^{0.6} \left(\frac{S}{L}\right)^{0.2} \quad \text{Multi - Lanes Loaded}$$

$$g_1 = 0.06 + C \times \left(\frac{S}{14.0}\right)^{0.4} \left(\frac{S}{L}\right)^{0.3} \quad \text{Single - Lane Loaded}$$

Where:

C = 1.02 for steel beams
1.10 for prestressed I-beams (36 in. 42 in., 48 in., 54 in.)
1.15 for prestressed bulb-T beams (63 in., 72 in.)
S = Beam spacing in ft.
L = Span length in ft, with L as defined in LRFD Table C4.6.2.2.1-1.

For fatigue evaluations the following distribution factor equation may be used:

$$g_1(\text{fatigue}) = \frac{g_1}{m} \quad \text{Single - Lane Loaded}$$

Where:

g_1 = Single - Lane Loaded Distribution Factor
m = Multiple Presence Factor

The moment reduction factors for highly skewed bridges in LRFD Table 4.6.2.2.2e-1 shall not be applied.

For shears and reactions for structures that meet the criteria above, the live load distribution factors for shear from LRFD Table 4.6.2.2.3a-1 for the multi-lane loaded and single-lane loaded cases should be used for all beams/girders. For structures that are skewed, these live load

distribution factors shall be multiplied by the following simplified skew correction/amplification factor (in lieu of the factors from LRFD Table 4.6.2.2.3c-1):

$$1.0 + 0.20 \tan\theta$$

Where:

θ = Skew angle

This skew correction/amplification factor shall be applied to all beams/girders only at non-continuous ends (expansion joints, abutments). Continuous beams/girders at piers shall not have the correction/amplification factor applied.

For cases where the criteria listed above are not met (i.e., the bridge is not typical), the LRFD code should be followed (including LRFD Table C4.6.2.2.1-1) or contact the Bureau of Bridges and Structures.

LFD

For LFD design, vehicular loads for longitudinal steel stringers, interior and exterior, shall be distributed in accordance with Article 3.23 of the AASHTO Standard Specifications. The lane load distribution shall be one half the wheel load distribution given in Article 3.23. For example, the lane load distribution to an interior stringer is S/11 when the wheel load distribution is given as S/5.5. The standard fascia section shown in Figures 3.2.4-1 and 3.2.4-3 usually results in a lower required design capacity for the exterior stringer than for the interior. The exterior stringer, therefore, need not be designed separately when using this standard fascia unless the stringer spacing is less than 5.5 ft.

LRFD and LFD

Typically, when determining dead load moments and shears using the LRFD or LFD Specifications for a straight bridge, the deck dead load supported by interior beams shall be the portion center-to-center of the beam spans, and the dead load supported by the exterior beams shall be the portion which is comprised of half the center-to-center distance between beams plus the cantilevered overhanging portion of the deck. The curb section and rail above the mandatory horizontal construction joint, the median (if of the superimposed type), and any superimposed wearing surface (proposed or future) shall be distributed equally to all beams.

There are situations, however, where the simple distribution of superimposed dead loads described above may not be appropriate. These include, but are not limited to, bridges with very wide decks and/or open longitudinal joints, and curved girder bridges. When the equal distribution method appears inappropriate or is not allowed such as for curved girders, engineering judgment may be exercised to distribute superimposed dead load in a non-uniform fashion. For example, if the bridge is straight and has at least 9 beams, the dead load from one parapet can be distributed to the 3 exterior beams. Depending upon the size of a sidewalk or median, the distribution may logically extend over more beams.

The analysis used to determine the composite dead load moments, shears and reactions shall be based on the section modulus with the concrete transformed to steel using a modular ratio of n. The stresses in the section are based off of various section moduli depending upon application. See Design Guide 3.3.4 for more information.

Exterior stringers shall typically be of the same section and capacity as the interior stringers even though the design analysis indicates that it could be less. If special cases arise where the design requirements of the exterior stringer are greater than the interior, modification of the fascia portion of the structure may be considered. Note that the criteria and simplifications described above for LRFD designs are meant to ensure that an interior beam normally governs the design.

Base sheet SB-1, which details special cantilever forming requirements, shall be included in the plans when W27 or smaller steel beams are used in order to prevent excessive torsion on these shallow beams.

3.3.2 Limiting Live Load Deflection of Beams and Girders

LRFD and LFD

The limiting ratios of live load deflection to span length for simple or continuous spans, as given in AASHTO Article 2.5.2.6.2 for LRFD and Article 10.6 for LFD, shall be applied to all vehicular bridge types with pedestrian sidewalk and/or bicycle lanes.

The live load deflection shall be computed considering all beams acting together and having equal deflection. For composite designs, the stiffness of the design cross section shall not include the

effects of railings, parapets, sidewalks, or medians. Impact or the dynamic load allowance (LRFD) shall apply.

The live load deflection distribution factor shall be calculated using the following distribution formula:

$$g\ (\text{deflection}) = m\frac{N_L}{N_b}$$

Where:
m = Multiple Presence Factor
N_L = Number of lanes
N_b = Number of beams

3.3.3 Uplift at End Reactions

LRFD

Uplift in the AASHTO Standard Specifications is treated as a separate load case (with its own Article) while in the LRFD Specifications it is not. Guidance on how to check for uplift can be found in the commentary of Article 3.4.1 in LRFD. Much of the following guidance on uplift for bridges designed according to LFD, however, is still applicable.

LFD

End reactions of continuous beam designs shall be checked in accordance with Article 3.17 of the AASHTO Standard Specifications for uplift. Since a concrete deck slab and diaphragm system is considered sufficiently rigid for the necessary distribution, uplift investigation should be based on all beams acting together and having equal reactions under the critical loading. (Note that an unfilled or half filled grid deck may not provide adequate stiffness to justify this assumption.) All lanes should be loaded simultaneously and impact shall apply. The number of traffic lanes loaded shall be in accordance with Article 3.6 of the AASHTO Standard Specifications.

LRFD and LFD

The allowance for future wearing surface should not be included in uplift calculations when it increases the end reactions.

3.3.4 Design of Steel Members- General

LRFD and LFD

All steel stringers, girders, floor beams or sub-stringers shall be of rolled beam or welded plate design. Generally, shop connections shall be welded and field connections shall be made with mechanical fasteners.

The section of a rolled beam stringer of continuous design may be varied at field splices so long as a constant nominal depth is maintained.

Conservation of material in welded plate girders usually requires transitions in flange plate thickness and/or width. Width and/or thickness transitions typically occur at field splices to minimize butt welding requirements. Shop welded flange transitions should be limited to thickness changes only for efficient fabrication. Welded girder segments between field splices may be detailed with a few transverse stiffeners (in addition to cross frame connection plates) to avoid heavier webs. See Section 3.3.14. Longitudinal stiffeners should only be considered for deep webs, usually over 10 ft. See Section 3.3.20.

In determining the features of structural steel elements, however, conservation of material should not receive unwarranted emphasis. In welded plate girder design, minimum web thickness shall be $\frac{7}{16}$ in., and a thicker web avoiding extra stiffeners may be more economical for fabrication while providing additional capacity. Simplification and repetition of details, ease of erection, and stability during construction are some of the factors to be considered in design.

AASHTO M270 Grade 50 or 50W steel shall be considered the preferred material for designing primary members. AASHTO M270 Grade 36 shall be the default material for all diaphragms, cross frames, and connecting plates or angles on straight, painted structures. For weathering steel (AASHTO M270 Grade 50W), all diaphragms, cross frames, and connecting plates or angles shall also be M270 Grade 50 W. See Section 2.3.6.1.2 for further guidance.

Appendix A of Section 6 in the LRFD Design Specifications contains alternative provisions for determining the flexural resistance of straight steel beams in negative moment regions. As permitted (i.e., if a steel beam or girder qualifies), Appendix A should be used for the design of steel beams or girders over piers in straight bridges for LRFD projects. Appendix A is a close facsimile of corresponding provisions in the LFD Design Specifications. See also Section 3.1.12 for additional information.

3.3.4.1 Fatigue Analysis

LRFD

The fatigue loading frequency for LRFD is determined as the number of trucks per day in a single lane averaged over the design life ($ADTT_{sl}$) as given in LRFD 3.6.1.4. As the equations in this section specify a 75-year design life, the ADTT used to calculate $ADTT_{sl}$ shall be that at 37.5 years. This number may be linearly extrapolated from values of ADTT given on the TSL. See Design Guides 3.3.4 and 3.3.9 for examples of calculation of $ADTT_{sl}$.

Distortion-induced fatigue has been observed to be a problem for some existing bridges. Detailing and design procedures for distortion-induced fatigue are given in AASHTO LRFD 6.6.1.3 and 6.10.5. The rehabilitation of existing bridges should be analyzed for those details. In recent years, distortion-induced fatigue has caused separation of stiffeners from flanges in negative moment areas.

When using the distribution factors contained in Section 4, the final distribution factor shall be divided by 1.2 to eliminate the single-lane multiple-presence factor as given in AASHTO LRFD 3.6.1.1.2.

3.3.5 Design of Steel Beams and Girders – Lateral Stresses

LRFD

Section 6 of the AASHTO LRFD Design Specification has "unified" the provisions for the design of straight and curved girders. The design equations which shall be satisfied, according to the code, are applicable to both types of steel bridge members. Many of the design equations contain a term for lateral bending stress, f_l. For straight girder bridges, including flare geometry, with skews ≤ 45°, this stress term shall be taken as zero (0). When the skew of a straight girder bridge exceeds 45°, the lateral bending stress shall be taken as 10 ksi, as suggested in the commentary of the LRFD Code, or a more detailed analysis may be undertaken to justify a lower value. Note that diaphragms in straight beam superstructures placed perpendicular to the girders but (staggered) along the skew, as is typical IDOT policy, are considered "continuous" by the Department. The f_l term is not zero for curved girder bridges designed according to LRFD.

LFD

The AASHTO LFD Code has no lateral bending stress term for straight bridges. The f_l term is not zero for curved girder bridges designed according to the AASHTO "Guide Specifications for Horizontally Curved Steel Girder Highway Bridges", 2003.

3.3.6 Design of Steel Beams and Girders – Moment Redistribution

LRFD and LFD

Moment Redistribution shall not be used as a structural analysis technique for IDOT bridge design projects. Moment Redistribution is an elastic analysis technique which approximates plastic analysis for continuous steel beams and is allowed under certain conditions according to AASHTO LRFD Appendix B of Section 6 and LFD Article 10.48.1.3. Generally, for sections which are compact and are sufficiently braced, a fully plastic steel failure is theoretically possible. Plastic analysis of structures is characterized by determining the locations of plastic hinges which form to create a mechanism at failure. The governing mechanism is that which takes the least amount of energy to form. The moments calculated from plastic analysis and its approximation, moment redistribution, are somewhat different than those from conventional elastic analysis, but not to a degree which has appreciable engineering significance for bridges designed according to IDOT

policy. It is also Departmental policy to promote a degree of uniformity in bridge design and bridge rating procedures. The employment of moment redistribution does not achieve these aims.

3.3.7 Notch Toughness Requirements

LRFD and LFD

The components of main load carrying steel bridge members subject to design tensile stresses shall conform to the Supplemental Requirements for Notch Toughness (Zone 2). These components, including tension flanges, webs and splice plates (excepting fills) shall be designated on the plans by "NTR", with an explanation of these letters on the sheet. Cross frame or diaphragm elements and their connecting plates carrying design stresses for curved structures or supporting terminating beam/girder lines shall also be designated "NTR."

When field splices are near points of dead load contraflexure, bottom flanges on the pier (negative moment) side of the splice and top flanges on the mid-span (positive moment) side of the splice do not require NTR material, even though they may experience slight tensile stresses due to live loads.

3.3.8 Cover Plates

LRFD and LFD

Cover plates should not be used on new bridges or superstructure replacement projects. They may be used for repair projects where cover plated rolled beams are replaced in-kind or for bridge widening jobs to match existing beams. Multiple (stacked) cover plates shall not be used at any location. The maximum thickness shall not be greater than 1 ½ times the thickness of the flange to which the cover plate is attached. (Note that this is conservative relative to AASHTO LRFD and LFD.) The minimum thickness shall not be less than $\frac{1}{24}$ times the distance between edge welds measured transverse to the direction of stress or ½ in., whichever is greater.

The minimum length of any cover plate shall be twice the depth of the beam plus three (3) ft. The maximum width of any cover plate shall be the flange width minus one inch. If matching an existing condition that does not satisfy these criteria, contact the Bureau of Bridges and Structures.

The designer should be aware that the use of cover plates may not be practical under the current AASHTO LRFD and LFD fatigue requirements, especially for structures subjected to high cyclic stresses. In these structures, the designer should consider the possibility of replacing old members with larger beam sections in lieu of those with cover plates.

In LRFD, cover plates are addressed in Article 6.10.12. Generally, the requirements listed above are either identical or more conservative than the LRFD Specifications.

The standard end treatment for cover plates is shown in Figure 3.3.8-1.

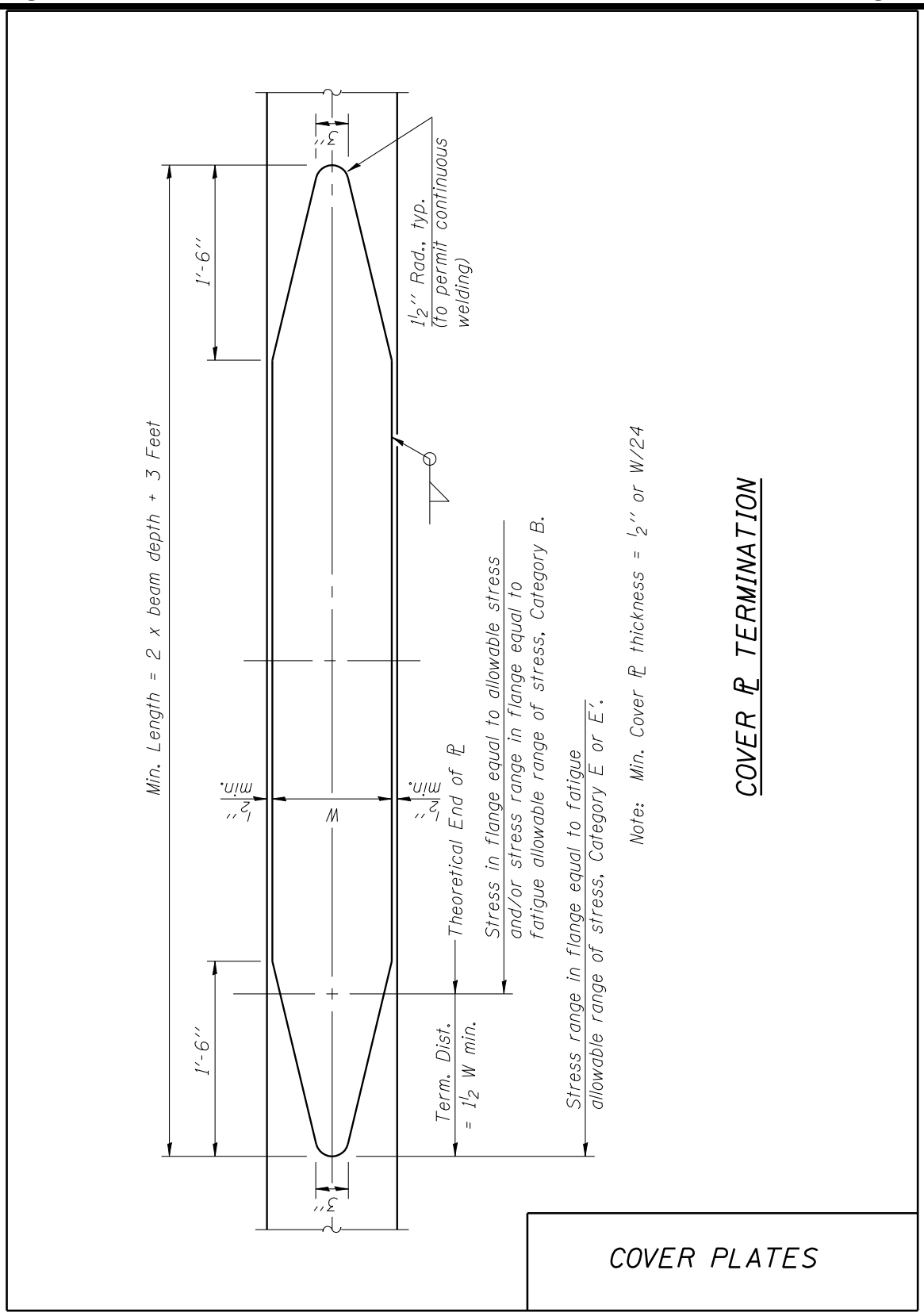
Min. Length = 2 x beam depth + 3 Feet
1'-6"
1'-6"
3"
3"
1½" Rad., typ.
(to permit continuous welding)
½" min.
½" min.
W
Theoretical End of PL
Stress in flange equal to allowable stress and/or stress range in flange equal to fatigue allowable range of stress, Category B.
Term. Dist. = 1½ W min.
Stress range in flange equal to fatigue allowable range of stress, Category E or E'.
Note: Min. Cover PL thickness = ½" or W/24
COVER PL TERMINATION
COVER PLATES

Figure 3.3.8-1

LRFD and LFD

Composite design for straight or large radii curves considered by the criteria below as equivalently straight curved continuous wide flange beams and I-plate girders shall be utilized in both the positive and negative moment areas. Shear connectors shall be used over the entire bridge length. However, noncomposite design in the negative moment areas of straight or equivalently straight bridges may be considered when approved by the Bureau of Bridges and Structures for existing steel beams which are being redecked or widened in kind. Curved girders which are not considered equivalently straight shall be designed as composite for the entire length of the structure.

The Department's criteria for delineating between a curved girder and an equivalently straight curved girder was adopted from the AASHTO "Guide Specifications for Horizontally Curved Steel Girder Highway Bridges", 2003. These provisions are also found in LRFD 4.6.1.2.4b. A curved girder may be considered equivalently straight for design if:

1. The girders are concentric
2. The arc span, L_{as}, divided by the girder radius is less than 0.06 radians (3.44°) where L_{as} is as follows,
   a. For simple spans: L_{as} = centerline length of the girder between supports ("arc length")
   b. For end spans of continuous beams: L_{as} = 0.9 times the arc length
   c. For interior spans of continuous beams: L_{as} = 0.8 times the arc length

The deck is considered to provide lateral torsional stability for trapezoidal steel box girders. To ensure this behavior, shear connectors shall be provided in both the positive and negative moment areas of steel box beams even if composite action is not considered in the design of negative moment areas.

For the usual composite design, ¾ in. diameter stud shear connectors, a minimum of 4 in. long, shall be detailed. ⅞ in. diameter stud shear connectors may be justified for large girders, but these need higher output welding equipment, so approval by the Bureau of Bridges and Structures is required before specifying them. Shear reinforcement shall be provided from the slab to the

fillet for deep fillet heights where the top of flange to bottom of deck exceeds 6 inches. See Figure 3.3.9-1. The top of the studs shall be a minimum of 2 in. above the bottom of the deck slab except when fillet areas have shear reinforcement. To allow concrete consolidation without bridging or voids, the minimum distance between centers of stud shear connectors shall be 4 times the nominal diameter of the stud. The distance between the edge of a girder flange and the center of the stud shall not be less than 1 ½ in. Note that these are minimums, and larger spacing is desirable for concrete consolidation. A detail similar to the one given in Figure 3.3.9-1 shall be shown on the plans.

AASHTO LRFD Article 6.10.10 and Standard Specifications Article 10.38.5.1 contain provisions for stud design. Also see Design Guide 3.3.9 which is available online. It emphasizes the design of shear studs for straight bridges using the LRFD Code (which has been unified for both straight and curved girder stud design). Note that the definitions for diaphragm continuity and severity of skew outlined in Section 3.3.5 also apply to stud design.

For composite plate girders, the minimum top flange plate width shall be 12 in. and the minimum thickness shall be ¾ in.

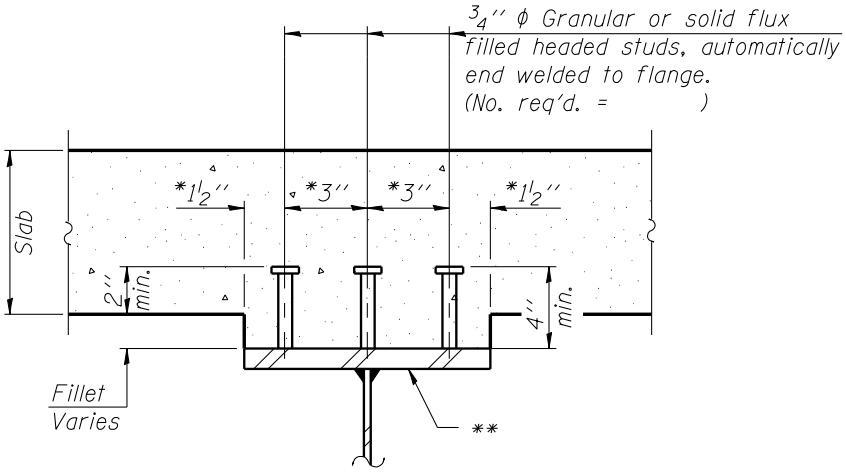

STANDARD FILLET SECTION

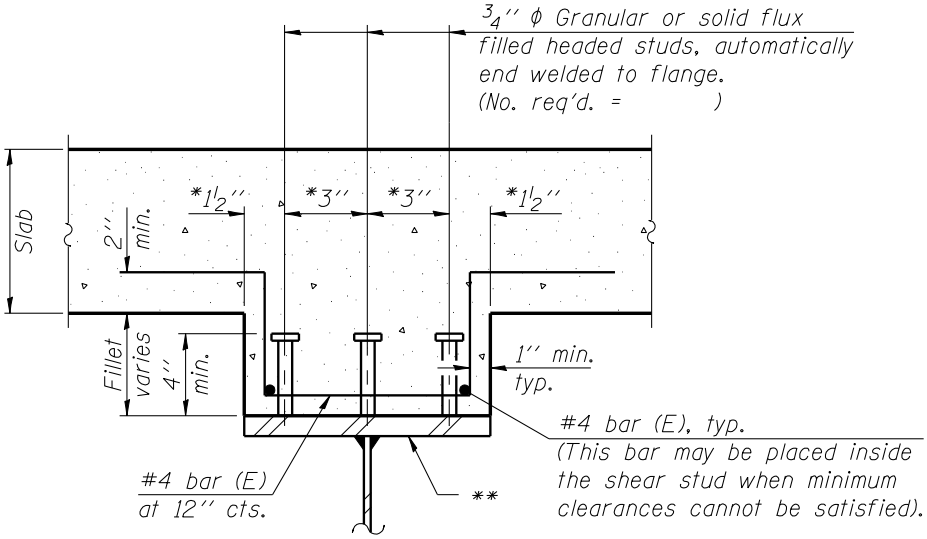

DEEP FILLET SECTION

* Minimum

** For plate girders, the minimum flange width is 12 in., so lateral spacings and edge distances should increase (2 in., 4 in., 4 in., 2 in.). Although 4-3/4'' ϕ studs could be placed in one row on a 12 in. flange, this should be avoided to facilitate concrete consolidation and to more uniformly distribute studs along the flange. Four studs per row may be appropriate for flanges 16 in. and wider.

TYPICAL DETAILS OF SHEAR CONNECTORS

Figure 3.3.9-1

3.3.10 Curved Member Diaphragms and Cross Frames

LRFD and LFD

The diaphragm placement for curved member bridges becomes more complex as curvature and skew of the supports increase. The Department has developed policies to follow for diaphragm design on curved bridges.

1. For curved bridges which are equivalently straight according to the criteria of Section 3.3.9, diaphragms shall be designed and detailed according to Sections 3.3.22 and 3.3.23 (regardless of skew).

2. When a curved member bridge is not equivalently straight and the supports are within 20° of radial (≤ 20°), nearby bracing may be placed parallel (not staggered) to the support. Between supports, bracing may remain skewed, become radial, or transition to the next support's skew, depending upon the distance between supports.

3. If supports skew more than 20° from radial and the bridge is not equivalently straight according the criteria of Section 3.3.9; the AASHTO "Guide Specifications for Horizontally Curved Steel Girder Highway Bridges", 2003, Section 6 of the LRFD Specifications and/or the AASHTO/NSBA "Guidelines for Design for Constructibility", 2003, should be referenced for guidance on placement of bracing.

Connection details for bracing on curved structures are addressed in Section 3.3.24.

3.3.11 Welded Girder Flange Transitions

LRFD and LFD

Figures 3.3.11-1 through 3.3.11-4 shall be used to estimate whether a reduction in plate thickness justifies the cost of the butt weld.

JOINT WIDTH = 12''

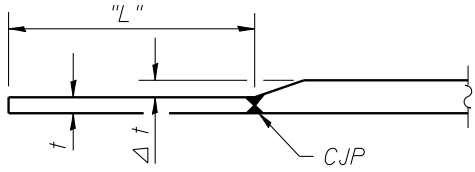

"L" = Minimum length of plate with reduction in thickness of Δ t required to justify the cost of the butt weld.

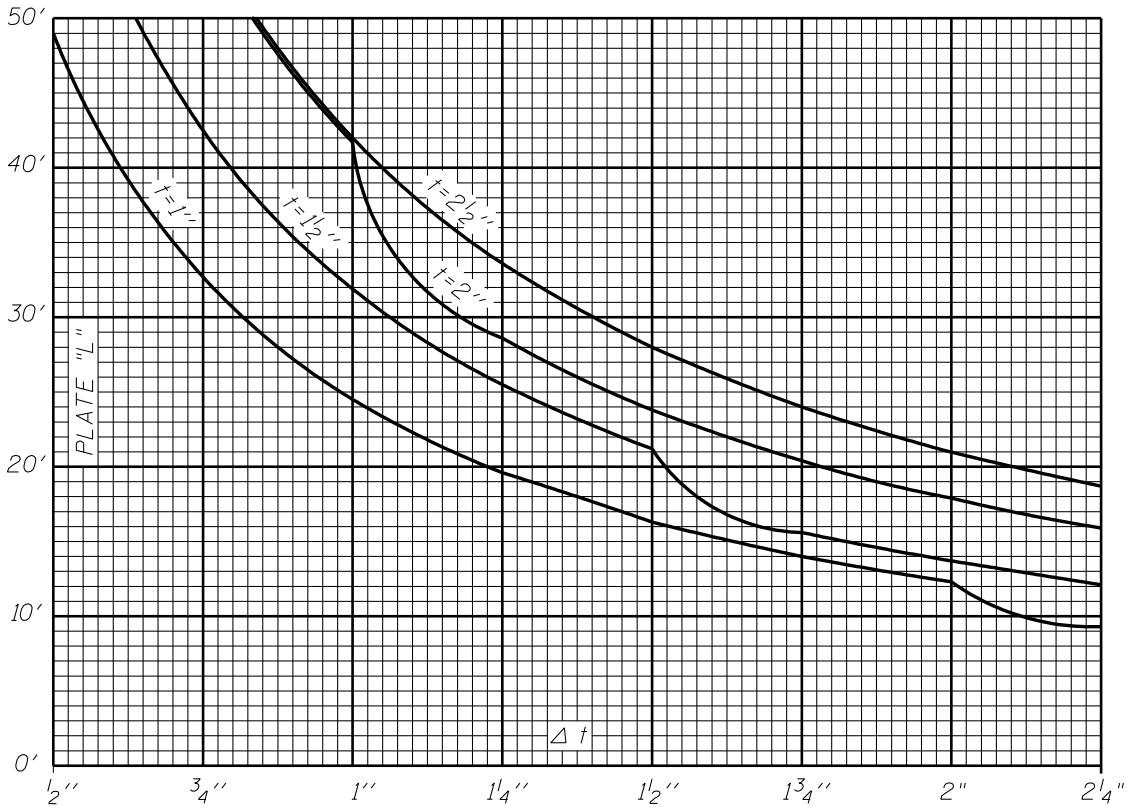

FLANGE PLATE
BUTT WELDS

Figure 3.3.11-1

JOINT WIDTH = 14''

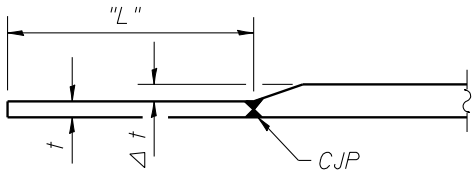

"L" = Minimum length of plate with reduction in thickness of Δ t required to justify the cost of the butt weld.

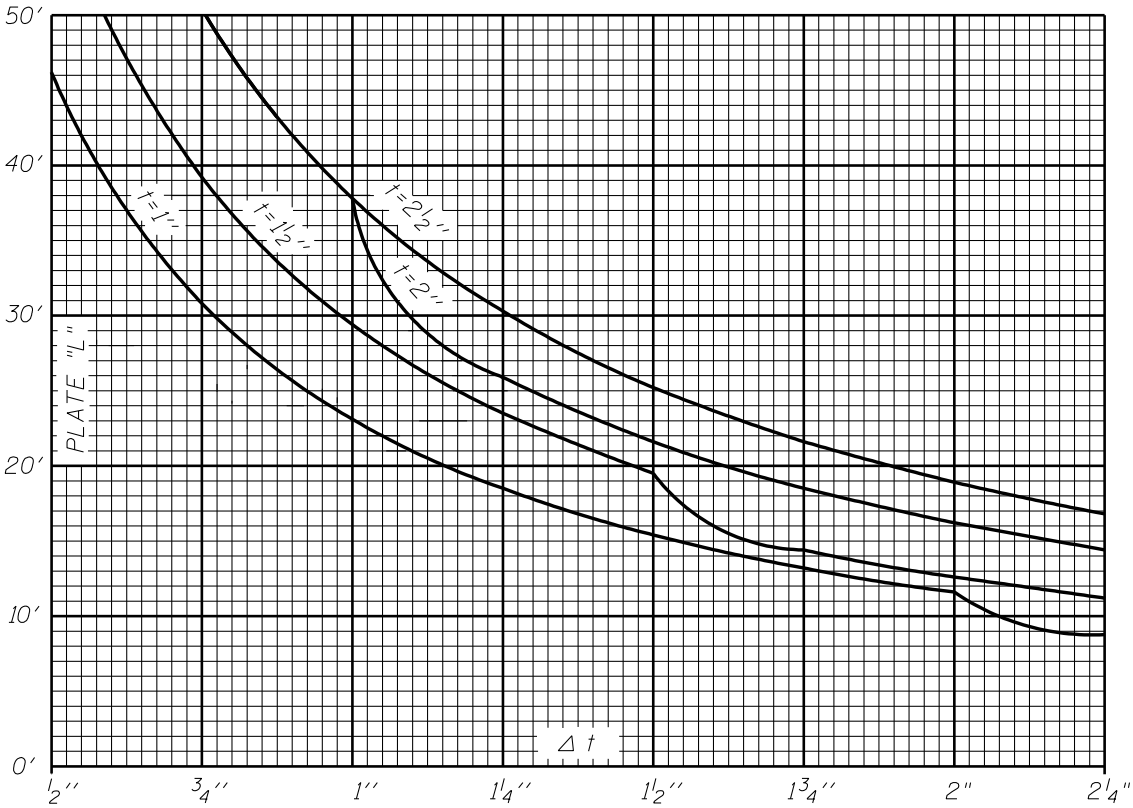

FLANGE PLATE
BUTT WELDS

Figure 3.3.11-2

JOINT WIDTH = 16''

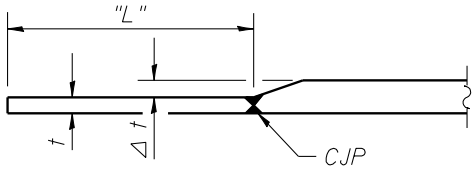

"L" = Minimum length of plate with reduction in thickness of Δ t required to justify the cost of the butt weld.

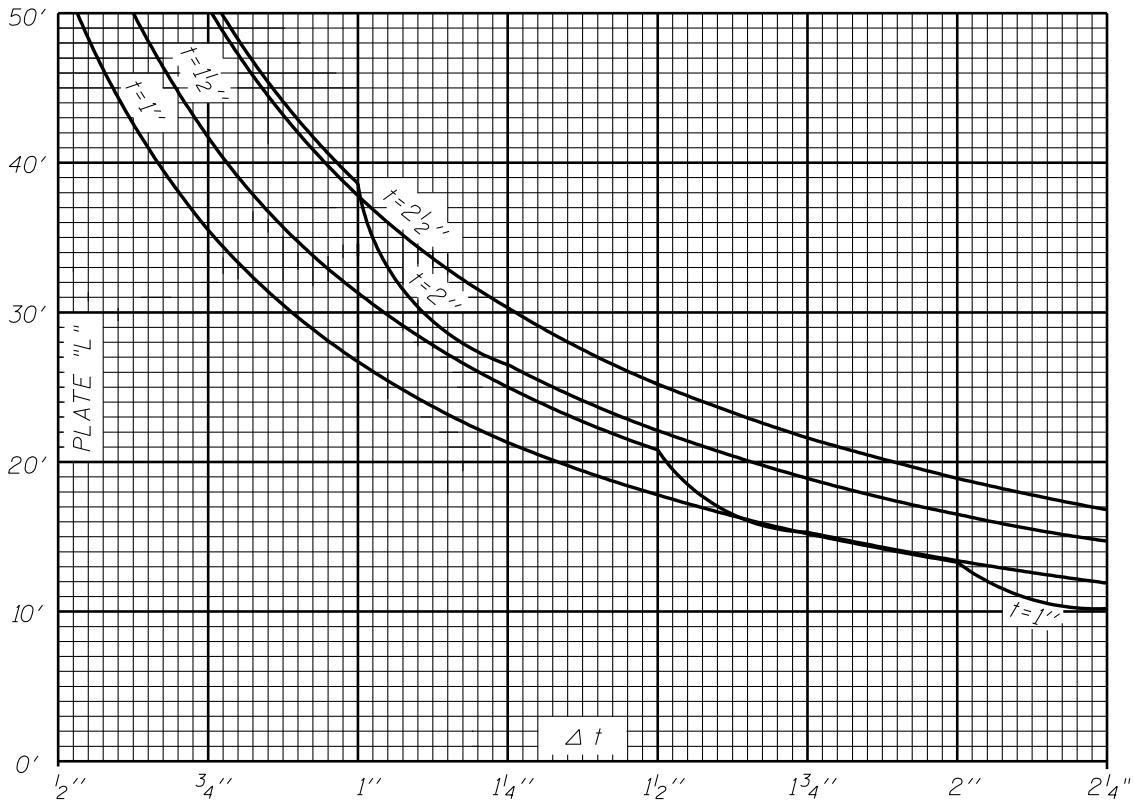

FLANGE PLATE
BUTT WELDS

Figure 3.3.11-3

JOINT WIDTH = 18''

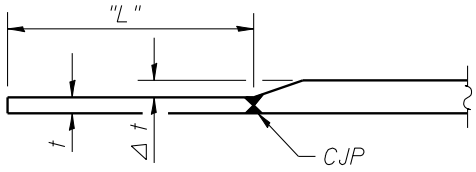

"L" = Minimum length of plate with reduction in thickness of Δ t required to justify the cost of the butt weld.

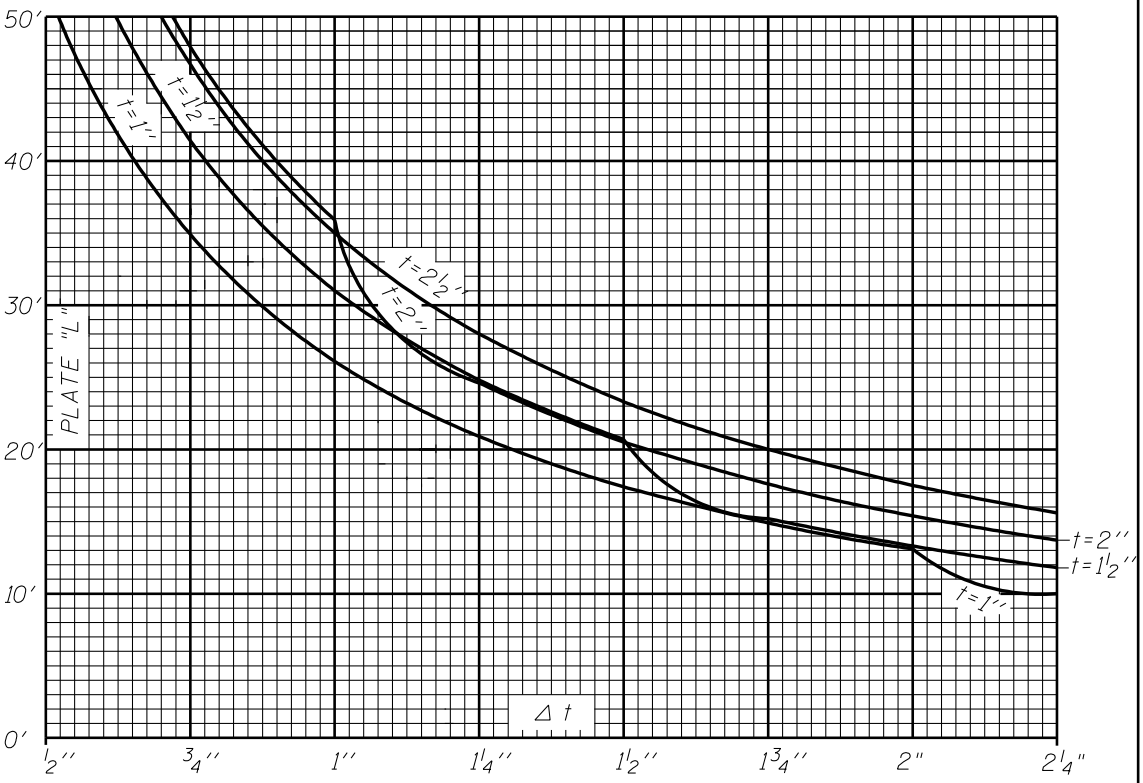

FLANGE PLATE
BUTT WELDS

Figure 3.3.11-4

The thicker plate in the transition shall be limited to approximately twice the thickness of the thinner plate. The flange width between bolted splices should be kept constant for economical fabrication, unless unusual conditions (span ratios, terminating girders, etc.) necessitate a width transition.

Butt welded thickness transitions are to be ground smooth and subject to the applicable fatigue allowable range of stresses for Category B in LRFD and LFD.

The National Steel Bridge Alliance (NSBA) publication "Guidelines for Design for Constructibility"(https://www.aisc.org/nsba/) provides guidance on maximum plate length which also affects butt joint placement.

3.3.12 Camber

Rolled beams shall not be designed with camber unless prior approval is obtained from the Bureau of Bridges and Structures for unusual applications such as a significant vertical curve, clearance problems, architectural requirements, etc. "Hot cambering" (by heat patterns), "cold cambering" (by jacking), or "roll cambering" (by passing between offset rollers) causes significant residual stresses, may negatively affect toughness or ductility, and may be partially lost due to gradual relaxation of internal stresses.

Plate girder webs are typically cambered to reduce the concrete fillet or haunch (the concrete between the top flange and bottom of the structural deck). See Figure 3.2.4-11. Calculated deflection due to the weight of the deck slab and the steel, and the vertical curve are used in computing the camber. The camber shown on the plans shall be the total before any dead load deflection. Fabricators use this to cut webs and verify dimensions with the girders in a "no-load" condition (fully supported with the web horizontal or vertical). Shown below in Figure 3.3.12-1, for guidance, is a schematic of a camber diagram. See also Design Guide 3.3.12.

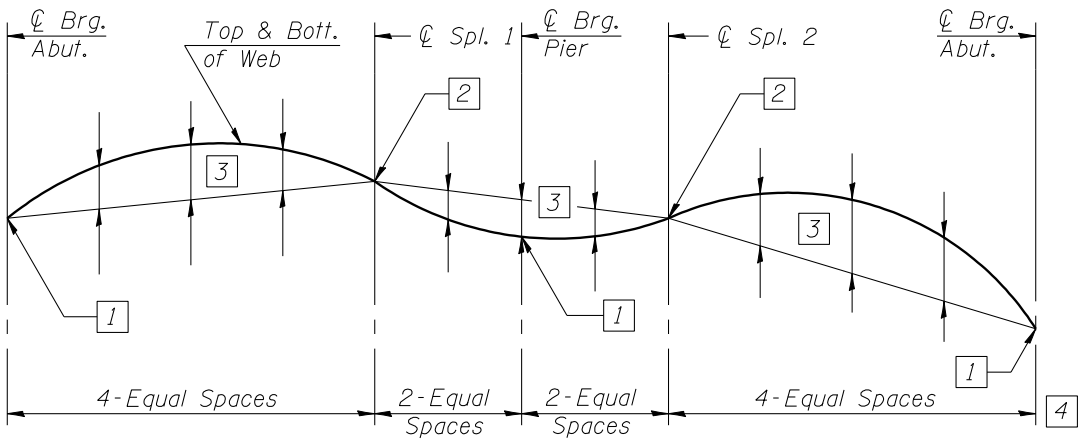

CAMBER DIAGRAM

1 Final top of web elevations to be used by the designer in computing the bearing seat elevations.

2 Theoretical elevations before dead load deflection to be determined by the designer.

3 The fabrication tolerance for camber is $\pm \frac{3}{4}$ in., so if the maximum calculated camber ordinate in a segment is less than $\frac{3}{4}$ in., the segment is shown on the design as straight (no camber) and cambers for adjacent segments are adjusted accordingly.

4 The number of spaces shown is typical for a symmetric, 2-span structure. Curves should be approximately parabolic or circular and avoid kinks or sudden changes in slope. If curvature must change (e.g. become tangent), vertical offsets should be added as needed to define the geometry.

Figure 3.3.12-1

3.3.13 Fillet Welds

Per Section 2 of the AASHTO/AWS D1.5 Bridge Welding Code, the minimum size of fillet welds shall be ¼ in. when the thicker plate joined is ¾ in. or less, and $\frac{5}{16}$ in. when the thicker plate exceeds ¾ in. Fillet sizes should increase based on calculated stress requirements, but oversized welds are detrimental. Fillet welds are on both sides of the element joined (stiffener, connection plate) to prevent tension at the root of the weld which is possible with a single sided weld.

3.3.14 Intermediate Vertical Stiffeners

LRFD and LFD

Intermediate vertical stiffeners shall be $\frac{7}{16}$ in. minimum thickness and fillet welded to one side of the web. Intermediate stiffeners not also functioning as bracing connection plates shall be welded to the compression flange, and stopped short of the tension flange. The distance between the end of the stiffeners and the near face of the tension flange shall be a constant dimension of from 4 to 6 times the web thickness plus the flange to web weld size and rounded to the nearest ½ in. When also acting as connecting plates for cross frames or diaphragms, intermediate vertical stiffeners shall be fillet welded to both flanges and the tension flange stress range shall be investigated for fatigue Category C' in LRFD and C in LFD. If the fatigue allowables are exceeded, either increase the flange thickness or, if only one or two locations exceed it, consider bolted connections at those locations only.

The stiffener plates at the junction of the flanges and the web shall be clipped 1 in. horizontally and 2 ½ in. vertically for webs up to $\frac{9}{16}$ in. thick, or four times the web thickness plus the size of web-to-flange fillet weld for thicker webs, rounded to the nearest ¼ in.

For girders with web depths equal to or smaller than 54 in., avoid transverse stiffeners in addition to cross frame connection plates. For webs deeper than 54 in., the web thickness may be increased to require only one or two vertical stiffeners per girder segment (between field splices) beyond the cross frame connection plates.

3.3.15 Cross Frame and Diaphragm Connection Plates

Connection plates shall be a minimum of $\frac{7}{16}$ in. thick and fillet welded to the web and both flanges. The tension flanges shall be investigated for fatigue (See Section 3.3.14). If cross frames require NTR material, the connection plates shall also.

3.3.16 Bearing Stiffeners

Bearing stiffeners shall be a minimum of ½ in. thick. Bearing stiffeners shall be finished to bear (ground, milled, etc.) on the bearing end and have a tight fit at the other end. The bearing stiffener plates at the junction of the flanges and the web shall be clipped per Section 3.3.14. They shall be fillet welded to both flanges when used as connecting plates for cross frames or diaphragms. Complete joint ("full") penetration welds shall not be specified between the stiffener and flange without approval of the Bureau of Bridges and Structures.

3.3.17 Structural Steel Framing

A "concrete fillet" is the concrete between the top of the flange and the bottom of the structural deck. In order to reduce the fillet on steel structures, girders may be cambered and the beam or girder slope may be changed at splices so the top of the top flange stays relatively close to the bottom of the formed deck slab.

On the structural steel sheet, a table showing fabricated top of beam elevations for rolled beams or top of web elevations for plate girders shall be provided. The elevations are prior to steel and concrete induced deflections and shall be given for all beams or girders at their supports and field splices. The table shall be noted as "For Fabrication Only".

For steel structures on a horizontal curve, the uniqueness of the framing plan layout necessitates the inclusion of additional data on the structural steel sheets to facilitate fabrication and erection.

The following data are considered essential. However, additional data may be provided at the discretion of the designer:

1. The radius of each individual beam or girder line.
2. The length of each individual beam or girder between bearings and splices measured along centerline beam or girder.
3. The total length of each individual beam or girder measured along centerline of beam or girder.
4. The lateral and longitudinal offset at all bearings and splices for each beam measured with reference to the local tangent of the structure.

Shown in Figure 3.3.17-1, for guidance, is a typical example of a proper presentation of the above data.

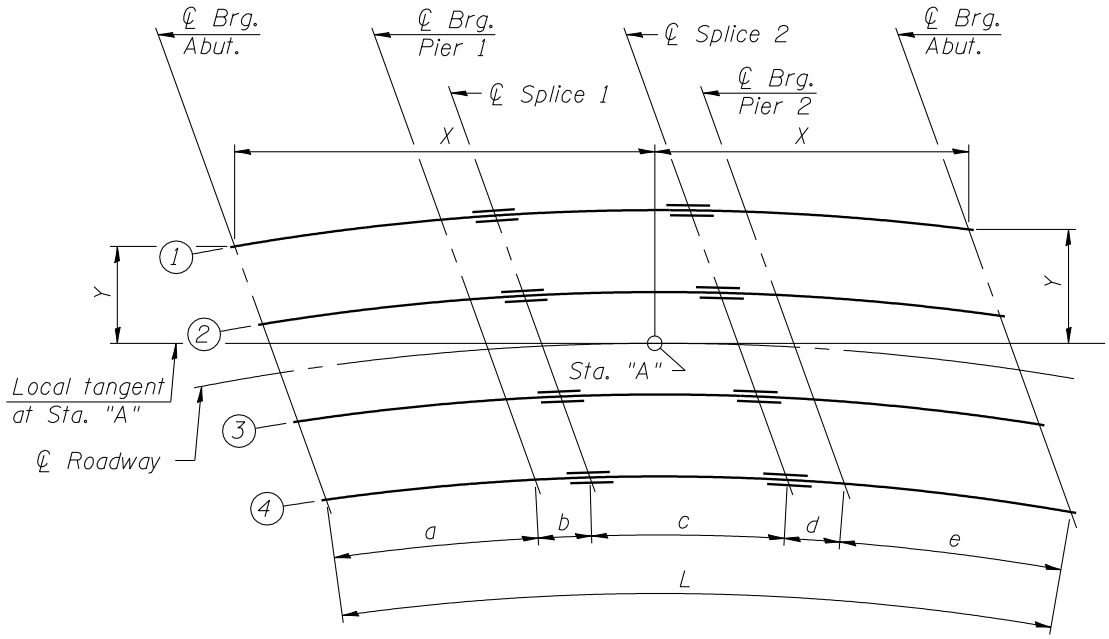

BEAM DIMENSIONS (in feet)

Beam	Radius	a	b	c	d	e	L
1							
2							
3							
4							

LAYOUT DIMENSIONS (in feet)

Beam	Abutment		Pier 1		Spl. 1		Spl. 2		Pier 2		Abutment	
	X	Y	X	Y	X	Y	X	Y	X	Y	X	Y
1												
2												
3												
4												

CURVED GIRDER
LAYOUT

Figure 3.3.17-1

3.3.18 Minimum Concrete Fillet Heights

1. Wide Flange Beams:
   Initial top of beam elevations for fabrication shall be established so that after deck placement, all locations on the top of beams, cover plates, and/or bolted splices shall have a positive fillet height of ½ in. or more between the flange and deck. Variations due to erection, mill camber, etc. should not result in a "negative fillet" with the flange, cover plate, and/or splice plate entering the deck.

2. Plate Girders
   Initial top of web elevations for fabrication shall be established so that after the deck placement, all locations on the top of girders and/or bolted splices shall have a positive fillet height of at least ¾ in. between the flange and deck. Variations due to erection, camber tolerance, etc. should not result in a "negative fillet" with the flange or splice plate entering the deck.

Positive fillets avoid embedment of the top flange or splice into the design structural depth of the deck slab. The minimum fillets for WF beams reflect bearing seat tolerances and "natural camber" in as-received beams. The minimum fillets for plate girders reflect a fabrication camber tolerance of ¾ in. plus or minus. (Note: this is different than the +1 ½ in., -0 in. range permitted by the AASHTO/AWS D1.5 Bridge Welding Code.) See Section 3.3.12 and Figure 3.2.4-11.

3.3.19 Lateral Bracing

LRFD and LFD

The need for lateral bracing in each span shall be investigated in accordance with Article 6.7.5 of the LRFD Specifications or Article 10.21 of the AASHTO Standard Specifications. On continuous spans, only those spans that require lateral bracing shall have it provided.

Designers shall investigate the need for lateral bracing to prevent overstressing structural members, excessive lateral deflection, and local (girder) or global (system) instability, due to lateral forces on the structure at applicable stages of construction. These stages include: fully-erected steel girders without deck, placement of concrete deck, and final in-service condition.

Temporary or permanent lateral bracing may be necessary for long-span structures or shorter span structures under stage construction.

3.3.20 Longitudinal Stiffeners

LRFD and LFD

Longitudinal stiffeners may be justified for deep girders, especially at haunches, to avoid very thick webs and/or closely spaced transverse stiffeners. They should end in areas under compression for all anticipated cyclic loading conditions. If they terminate in an area subject to tension, fatigue Category E' or E stress range limits shall be satisfied according to the LRFD or LFD Specifications as appropriate. Changing fillet welds connecting a longitudinal stiffener and web into a complete joint penetration weld for last 6 to 12 inches and radiusing the stiffener end tangent to the face of the web may avoid Cat. E' / E, but this can be expensive and imparts significant residual stresses, so it is not permitted without prior approval by the Bureau of Bridges and Structures.

When possible (e.g. fascia girders), longitudinal stiffeners should be on the opposite side of the web from transverse stiffeners and cross frame connection plates. If they intersect, the longitudinal stiffeners should be continuous and the transverse stiffeners or connection plates should be fillet welded to both sides of the previously installed longitudinal stiffener in a similar manner to their flange connections.

3.3.21 Bolted Field Splices

LRFD and LFD

Field splices in multi-span continuous structures are generally located near the point of dead load contraflexure (± 5% of span length). (See Section 3.3.9 for guidance on stud shear connector placement.) For AASHTO LRFD design, refer to Article 6.13 and in LFD to 10.18. Both specifications have similar design requirements, and differences in detailed requirements are not significant. According to LRFD and LFD, splices shall be designed to resist the average of the flexural moment-induced stress and shear force due to the factored loadings at the point of splice and the (factored) flexural and shear resistance at the same point, but not less than 75% of the (factored) flexural and shear resistance. When the section changes at the splice location, the

splice shall be based upon the smaller section as specified in both AASHTO codes.. The connection shall be symmetrical (except for filler plates).

Generally, when filler plates are required to connect different size components, they should not extend beyond the splice plates. If ¼ in. or thicker filler plates are required, a reduction factor shall be applied to the design shear strength of the fasteners passing through the filler, according to LRFD Article 6.13.6.1.5 or LFD Article 10.18.1.2. The reduction factors in LRFD and LFD are identical. Compare the fasteners required on the side of the connection with a fill to that required by the other side. Both sides shall use the same number of fasteners to ensure a symmetrical splice.

The following maximum lengths shall be used in determining field splice locations. If greater lengths are considered, the engineer shall investigate transportation and erection feasibility and receive approval from the Engineer of Bridges and Structures before designing the member.

Plate Girders	135 Ft.
W 36 and W 33	90 Ft.
W 30, W 27 and W 24	80 Ft.
W 21 and W 18	70 Ft.

Special considerations should be given to shallow (less than 48 in. web depth), haunched, curved or highly cambered girders.

All splice bolts should be, where practical, ASTM A 325 ⅞ in. ϕ with standard size holes for slip-critical connections. For slip resistance, a Class A surface should conservatively be assumed. Interior flange splice plates should be used when geometrically possible to reduce the amount of beam length with shear studs omitted. Note that for beams with narrow flanges, inside plates may not be possible due to the flange being too narrow to accommodate two rows of bolts per side of flange. See Figures 3.3.21-1 through 3.3.21-3 for more details.

Minimum splice plate thicknesses are ⅜ in. for webs and ½ in. for flanges. For flange splices with inside plates, the two inside plates should optimally use the same material thicknesses as the outside plate while still keeping the areas of the inner and outer plates within 10% of each other. This helps locate the combined centroid of the splice plates near mid-depth of the flange and provides for equal distribution of design forces to the inner and outer plates. Also, use commonly

available plate thicknesses, including ⅜, ½, ⅝, ¾, ⅞, 1, 1 ¼, and 1 ½ in. When plate girders require a small number of splices, web and flange thicknesses should be specified to simplify material acquisition. Figures 3.3.21-1 through 3.3.21-3 provides additional geometric detailing guidelines and recommendations for design of splices. See also Design Guide 3.3.21 which includes an LRFD splice design example.

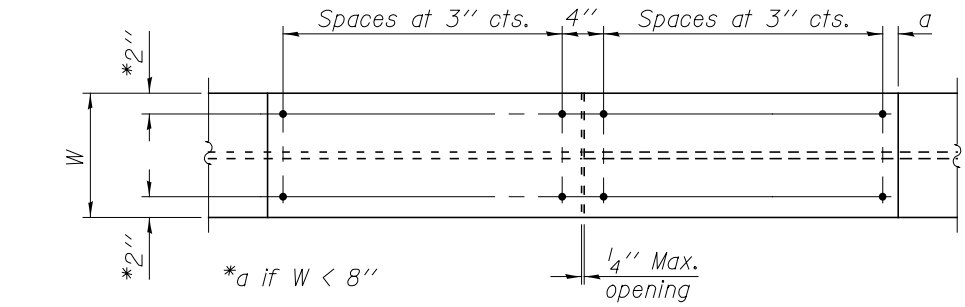

FLANGE SPLICE PLATE
(W ≤ 13'')

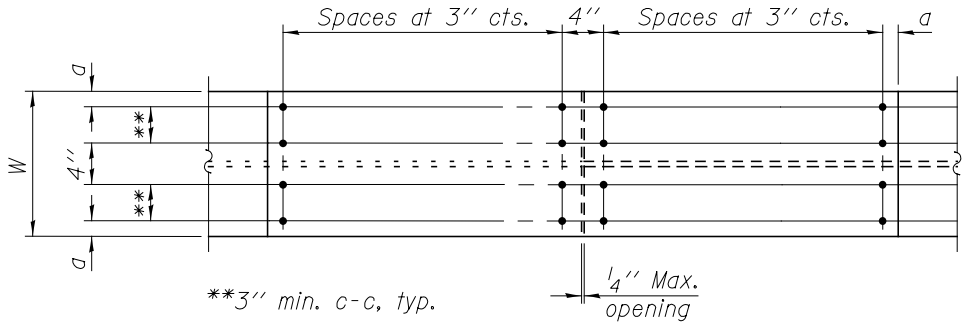

FLANGE SPLICE PLATE
(W > 13'')

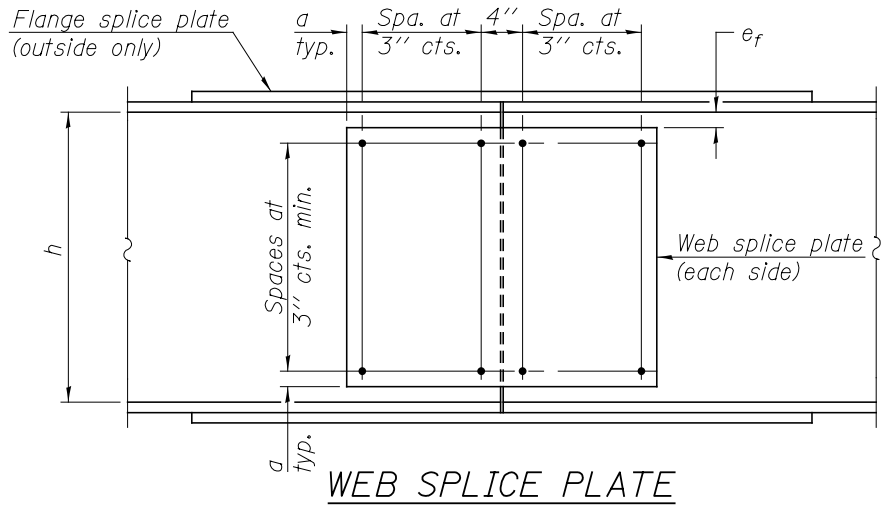

WEB SPLICE PLATE

Notes:
HS bolts shall be 7/8'' ϕ ASTM A325 (Type 3 for weathering steel).
See Fig. 3.3.21-3 for other notes and definitions.

STANDARD BEAM AND GIRDER SPLICE CONFIGURATIONS OUTSIDE FLANGE SPLICE PLATES

Figure 3.3.21-1

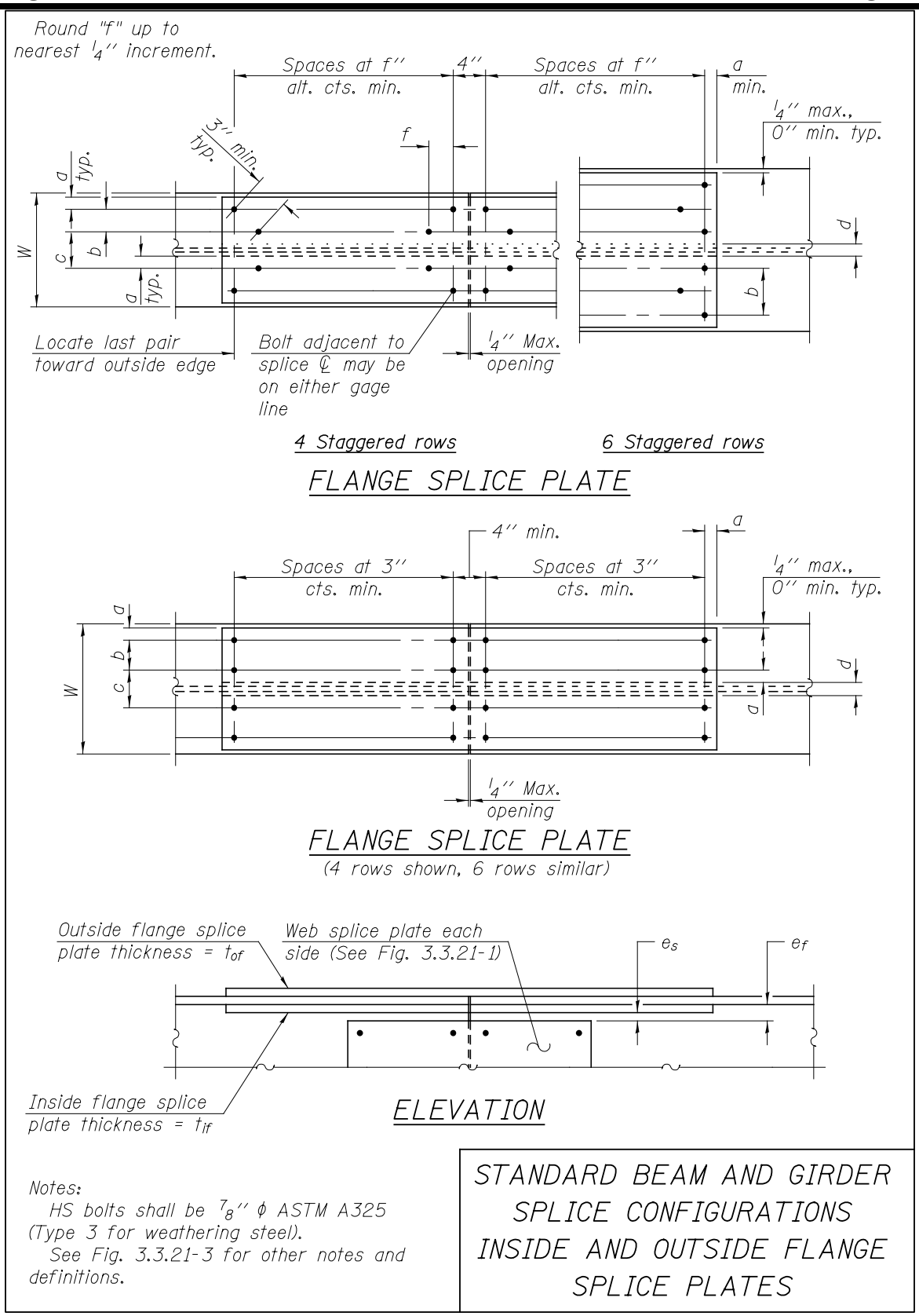

Notes:
HS bolts shall be 7/8" ϕ ASTM A325 (Type 3 for weathering steel).
See Fig. 3.3.21-3 for other notes and definitions.

STANDARD BEAM AND GIRDER SPLICE CONFIGURATIONS INSIDE AND OUTSIDE FLANGE SPLICE PLATES

Figure 3.3.21-2

General Recommendations:
a = edge/end distance: $1\frac{3}{4}''$ recommended, $1\frac{1}{2}''$ min.

b:
$b < 2''$: Use 2 parallel rows w/o stagger. (Splices without inside flange PL's only)
$2'' \leq b < 3''$: Use 4 staggered rows
$3'' \leq b < 4\frac{1}{2}''$: Use 4 parallel rows
$4\frac{1}{2}'' \leq b < 6''$: Use 6 staggered rows
$6'' \leq b$: Use 6 parallel rows

c:
$5''$ for PL girders with webs up to $\frac{5}{8}''$ and flange-web welds up to $\frac{3}{8}''$
$6''$ for W-beams with $k_1 \leq 1\frac{1}{8}''$ (increase for other cases)
For weathering steel bridges, this dimension may be increased to allow water to flow and reduce pack rust.

d:
(for W beams): $d \geq 2k_1 + \frac{1}{4}''$
(for plate girders): $d \geq$ web + 2 welds + $\frac{1}{4}''$

e:
(for W beams): $e_f \geq$ rolled radius + $\frac{1}{4}''$ & $e_s \geq t_{if} + \frac{1}{4}''$
(for plate girders): $e_f \geq 1''$ & $e_s > t_{if} + \frac{1}{4}''$

For flanges $\geq 26''$ wide, design varies.

$t_{if} \geq t_{of}$: Consider specifying same thickness as other NTR material in project.

Notes:
All splices are symmetrical about ℄ splice except for fills.

STANDARD BEAM AND GIRDER
SPLICE CONFIGURATION
NOTES AND DEFINITIONS

Figure 3.3.21-3

3.3.22 Interior Diaphragms and Cross Frames

LRFD and LFD

Diaphragm or cross frame bracing shall be placed at or near each support and throughout the span at 25 ft. – 0 in. maximum centers. This spacing limitation is in Section 10 of the AASHTO Standard Specifications for LFD. The AASHTO LRFD Specifications only provides diaphragm or cross frame spacing requirements for curved steel girders in Section 6. However, the LFD spacing limit of 25 ft. – 0 in. shall remain as IDOT policy for non-curved bridges designed according to the LRFD Specifications. This is due to constructability, re-constructability, stability concerns, etc. Specify the minimum number of braces required by design without exceeding a 25 ft. – 0 in. maximum spacing. Optimally, place bracing near the maximum positive moment location in a span as well as near field splices (between the splice and the pier) without increasing the total number. At end supports (abutments, non-continuous piers, seated connections, and pin and link connections), end diaphragms or frames shall be used. See Section 3.3.23. For steel beams on integral and semi-integral abutments, cross frames/diaphragms shall be placed 2 ft. into the span from the inside face of the concrete diaphragm to ensure stability during construction.

On rolled beam spans or for welded plate girders with web depths of 48 in. or less, diaphragms shall be used unless curvature effects require cross frames. The interior diaphragm detail shown in Figure 3.3.22-1 shall be used for rolled beams. Plate girders with webs up to 42 in. deep and not designed for curvature effects may use either the detail shown in Figure 3.3.22-1 or Figure 3.3.22-2, depending on if diaphragm connection plates are desired to also be used as transverse stiffeners. The detail presented in Figure 3.3.22-2 shall be used for plate girders with web depths between 42 in. and 48 in., regardless of whether diaphragm connection plates are desired to be used as transverse stiffeners. Figure 3.3.22-2 may also be used at interior supports for girders less with webs less than 42 in. deep when diaphragms are attached to the bearing stiffeners.

On plate girders with a web depth greater than 48 in., cross frames shall be used. Figure 3.3.22-3 illustrates the details of a cross frame for girders with or without transverse intermediate stiffeners.

The cross-frame and diaphragm details shown in Figures 3.3.22-1, 3.3.22-2, and 3.3.22-3 are generally adequate for girders designed using a line-girder analysis.

Bracing on girders designed using a grid analysis (significantly curved structures, structures with spans exceeding 240 ft., etc.) warrant special design as primary members and NTR material. These cross-frames shall include top chords in addition to the diagonals and bottom chords. Straight structures with spans nearing 240 ft. may also require non-standard cross-frames for constructability purposes, especially if there is a large span-to-depth ratio, large beam cantilevers during construction, or large beam spacing. Girders designed for curvature shall be braced at or within one flange width of its support to prevent lateral twisting of the girder and transverse bearing rotation. Further guidance on the design of bracing for curved girder structures can be found in the code and commentary of Section 6 in the LRFD Bridge Design Specifications.

BEAM	L	B	C*
W21 to W27	15''	2 spa. @ 5 1/2" cts.	C12 x 25 or C12 x 30
W30 to W33	24''	4 spa. @ 5" cts.	C12 x 25 or C12 x 30
W36, W40 and PL girders up to 42" deep	30 1/4"	5 spa. @ 5 1/4" cts.	C15 x 40 or C15 x 50

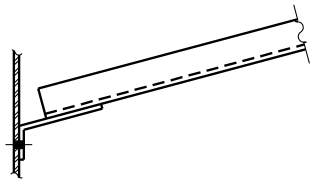

ALONG SKEW
(Skew 10° or less.)

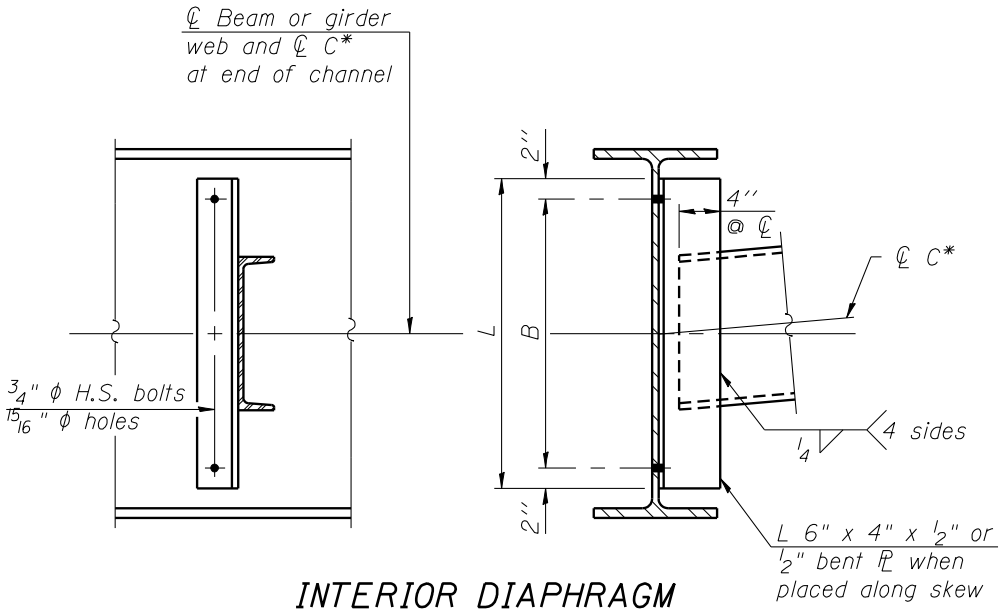

INTERIOR DIAPHRAGM
For rolled beams and welded girders with depths up to 42".

Note:
Two hardened washers required for each set of oversized holes.

Note to designer:
Show lighter channel section in detail.
List heavier channel section in starred note.

*Alternate channels are permitted to facilitate material acquisition. Calculated weight of structural steel is based on the lighter section. The alternate, if utilized, shall be provided at no extra cost to the Department.

INTERIOR DIAPHRAGM CONNECTIONS

Figure 3.3.22-1

Girder web depth	A	B
< 30''	(Special design)	
≥ 30'', <42''	2'-2''	4 Spa. at 5½''
≥ 42'', ≤48''	3'-1''	6 Spa. at 5½''

* May also function as transverse stiffener.

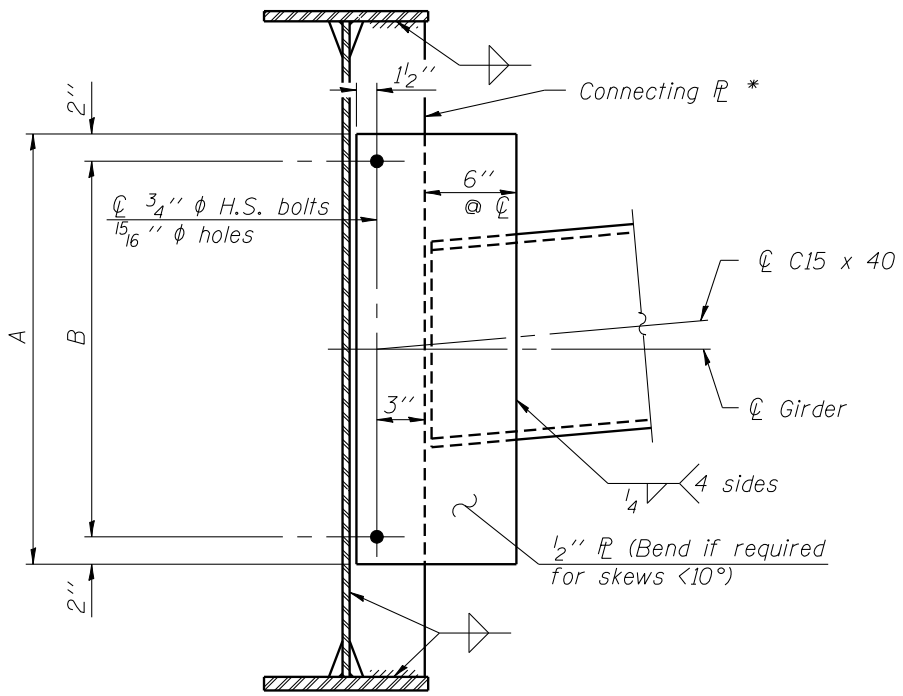

INTERIOR DIAPHRAGM

(For welded girders with web depths ≤48'')

Note:
Two hardened washers required for each set of oversized holes.
Alternate channels C15x50 are permitted to facilitate material acquisition. Calculated weight of structural steel is based on C15x40 sections. The alternate, if utilized, shall be provided at no extra cost to the department.

INTERIOR DIAPHRAGM CONNECTIONS

Figure 3.3.22-2

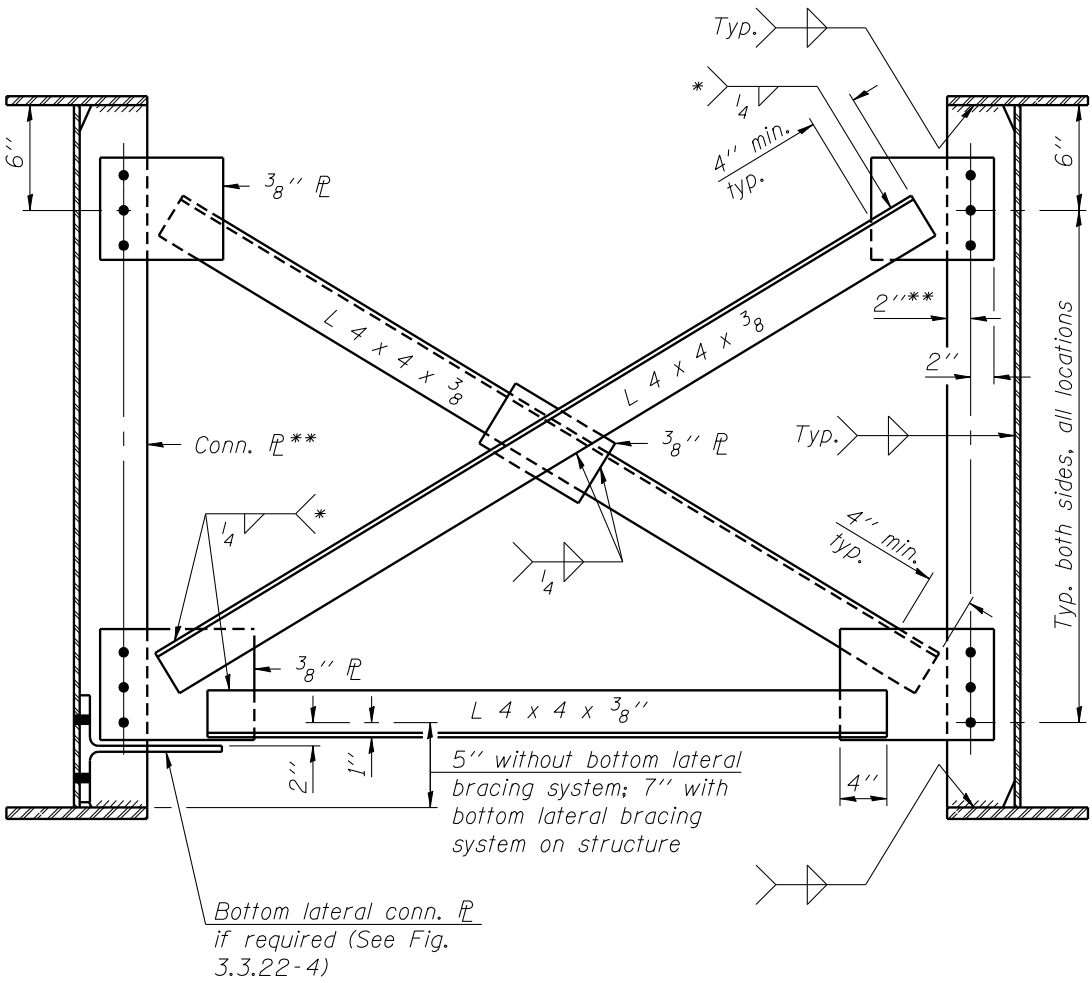

AT CONN. PL

AT INTERMEDIATE STIFFENER

TYPICAL INTERIOR CROSS FRAME

(Detail for welded girders greater than 48'' in depth).

* Fillet weld angles along 3 sides on one face of gusset plate.

** Connection plate may also function as transverse stiffener. If stiffeners are required elsewhere, use same plate size for all.

Notes:

Detail 15/16" ϕ holes for all 3/4" ϕ bolts (1 1/16" ϕ holes for all 7/8" ϕ bolts only if required by design).

Two hardened washers required for each set of oversized holes.

INTERIOR CROSS FRAME AWAY FROM SUPPORT

Figure 3.3.22-3

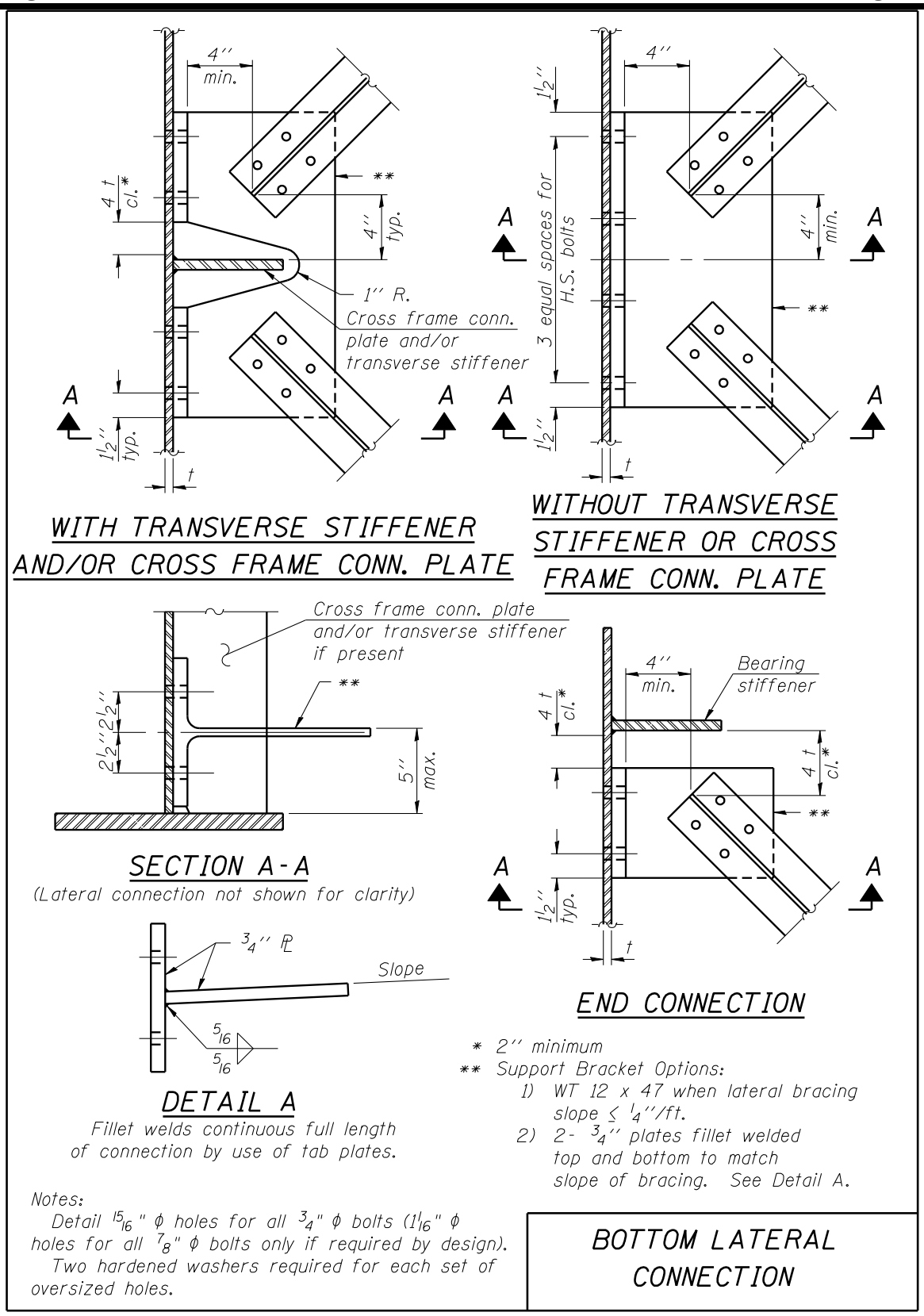

Figure 3.3.22-4

For skews greater than 10°, intermediate bracing shall be perpendicular to main members. For 10° and smaller skews, bracing may be placed either along skew line or perpendicular to main members. Where two adjacent members are not parallel, the bracing shall be shown perpendicular to one of the members.

Special consideration shall be given to the connections between floor beams and main girders to prevent fatigue cracking due to out-of-plane stresses, as described in Article 6.6.1.3 of the LRFD Bridge Design Specifications.

3.3.23 End Diaphragms and Frames

LRFD and LFD

At end supports (non-integral and non-semi-integral abutments, non-continuous piers, seated connections and pin and link connections), diaphragms or cross frames are normally placed along the centerline of bearings. They should slope from beam to beam with equal vertical clearances from the top flanges for constructability.

The end diaphragm and cross frame details given in Figures 3.3.23-1 through 3.3.23-7 utilize a reinforced concrete edge beam which is designed to resist the wheel loads, and steel channel sections (with legs facing away from the abutment backwall) which are designed to only transmit wind loads from the superstructure to the bearings. For design of the concrete edge beam see Section 3.2.2.1. The steel channels and reinforced concrete edge beams can be thought of as acting together to form a diaphragm system. The steel diaphragms or cross frames shall not be stepped at beams. Such steps are difficult to form beyond ends of beams, and the abrupt change in section may induce cracking in the end of the deck slab.

The details given in Figures 3.3.23-1 through 3.3.23-7 are not to be used on bridges which have finger plate or modular joints. End diaphragm and cross frame details for bridges with finger plate or modular joints are given in Section 3.3.23.1.

End diaphragm details for wide flange sections are given in Figure 3.3.23-1. For shallow plate girder sections (web depths not greater than 48 in.), the details are presented in Figure 3.3.23-2. Cross frame details for deep plate girder sections (web depths greater than 48 in.) and skews angles less than 45° are given in Figure 3.3.23-3. For skews angles greater than or equal to 45°, details are presented in Figures 3.3.23-4 through 3.3.23-6. Details for end diaphragms on stage construction projects are given in Figure 3.3.23-7.

BEAM	DIAPHRAGM
W21 - W27	C12 x 25
W30 - W40	C15 x 33.9

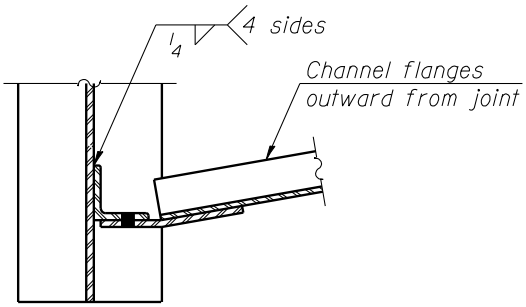

SECTION A-A

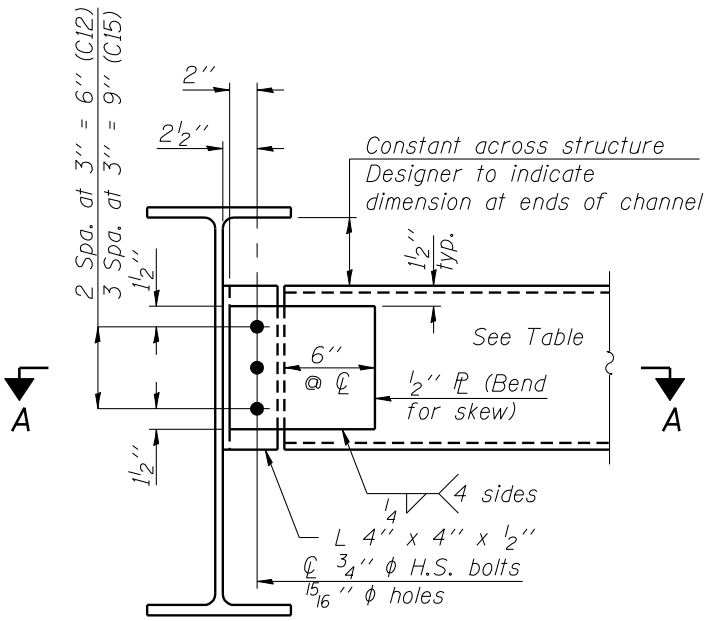

END DIAPHRAGM

Note:
Two hardened washers required for each set of oversized holes.

END DIAPHRAGM CONNECTIONS FOR WIDE FLANGE SECTIONS

Figure 3.3.23-1

Girder web depth	A	B
< 36″	(Special design)	
≥ 36″, <42″	2′-2″	4 Spa. at 5½″
≥ 42″, ≤48″	2′-7½″	5 Spa. at 5½″

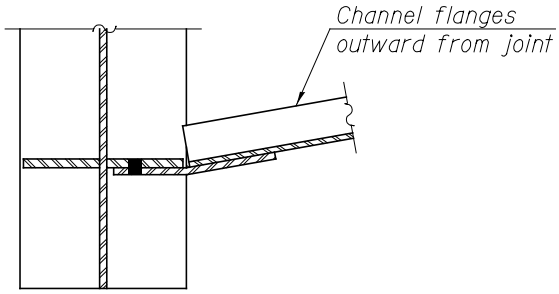

SECTION A-A

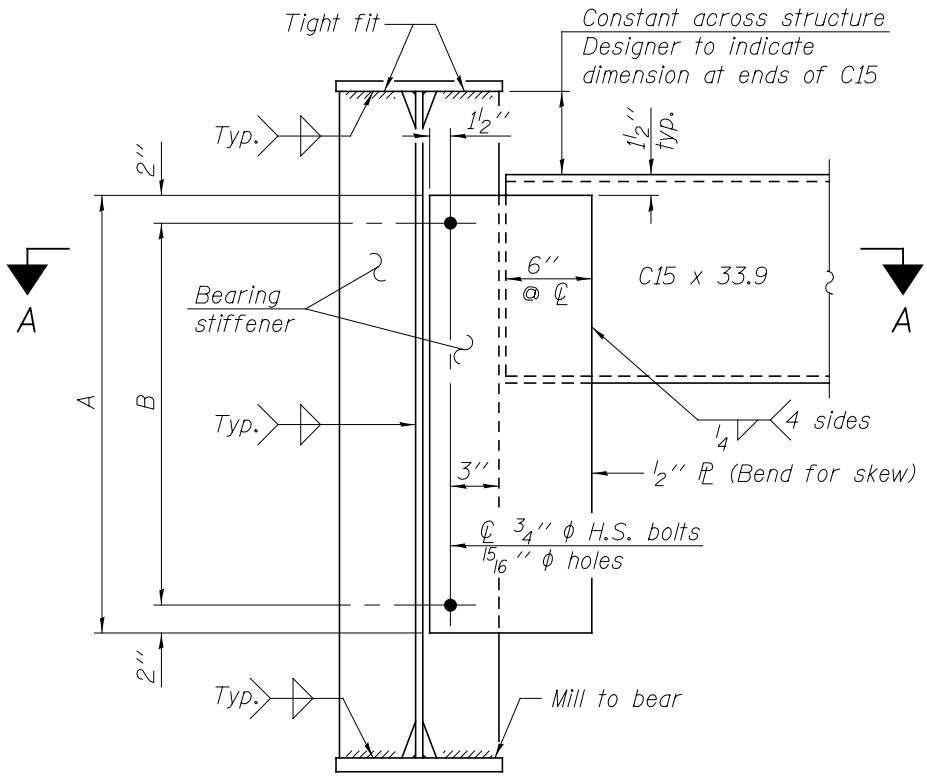

END DIAPHRAGM

(For welded girders 48″ and smaller in depth)

Note:
Two hardened washers required for each set of oversized holes.

END DIAPHRAGM CONNECTIONS FOR SHALLOW PLATE GIRDERS

Figure 3.3.23-2

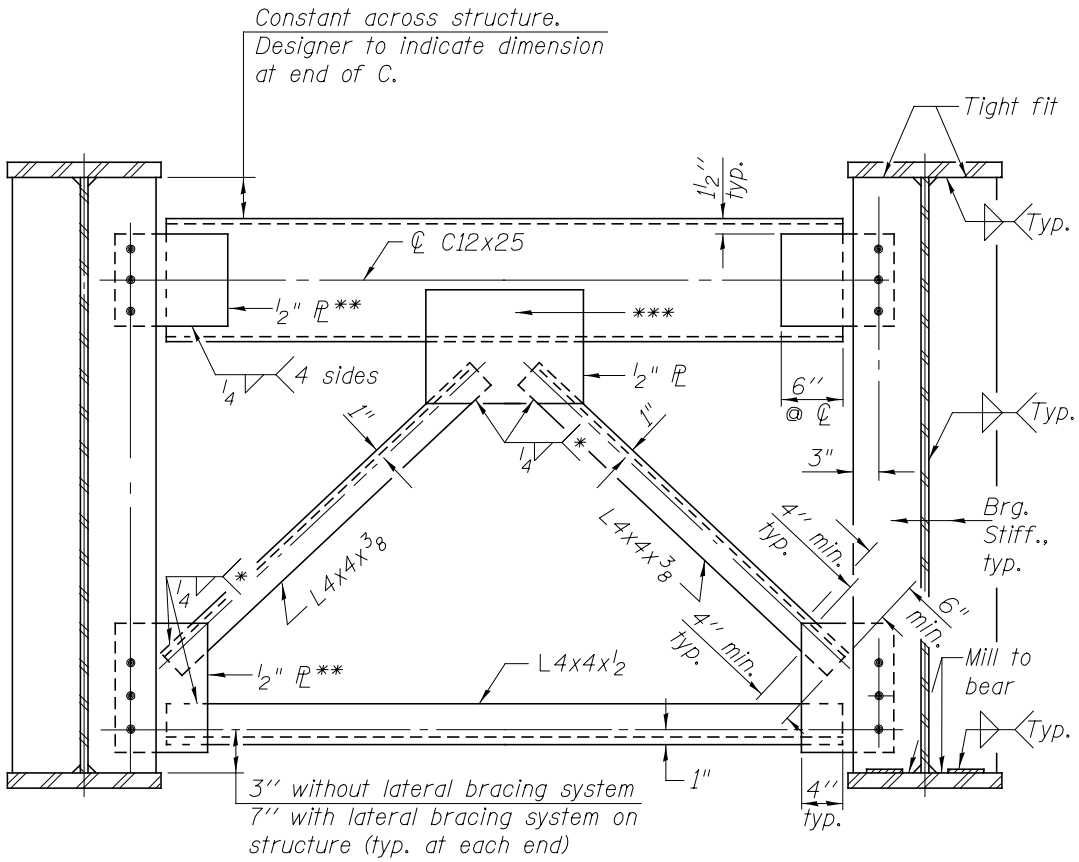

TYPICAL END CROSS FRAME

(For Welded Girders greater than 48" in depth)

Notes:

Detail 15/16" ϕ holes for all ¾" ϕ bolts (1 1/16" ϕ holes for all ⅞" ϕ bolts only if required by design).

Two hardened washers required for each set of oversized holes.

Place diaphragm with channel flanges and outstanding angle legs outward from abutment backwall..

Bearing Stiffeners shall be welded to flanges when used as cross frame Connection Plates. See Section 3.3.16.

* Weld on near side of ½" plate
** ½" plates to be bent for skewed structures.
*** Use bolted connection for stage construction. 3 bolts minimum.

END CROSS FRAME
FOR SKEW <45°

Figure 3.3.23-3

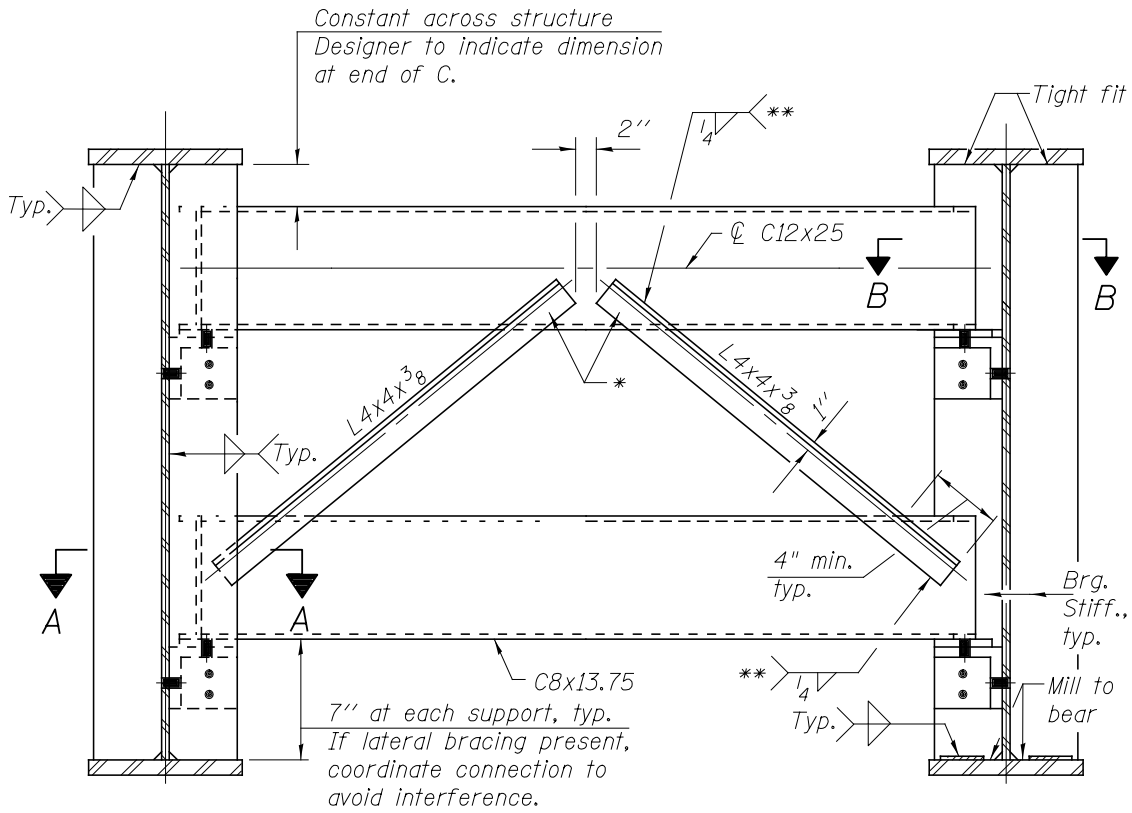

TYPICAL END CROSS FRAME

(For Welded Girders greater than 48" in depth)

Notes:

Detail 15/16" ϕ holes for all 3/4" ϕ bolts (1 1/16" ϕ holes for all 7/8" ϕ bolts only if required by design).

Two hardened washers required for each set of oversized holes.

Place diaphragm with channel flanges outward from abutment backwall.

Bearing Stiffeners shall be welded to flanges when used as cross frame Connection Plates. See Section 3.3.16.

For Sections A-A and B-B, see Figure 3.3.23-5.

* Use a minimum 2 bolt connection for stage construction.

** 3 sides, to back face of channel only, typ.

END CROSS FRAME
FOR SKEW ≥45°

Figure 3.3.23-4

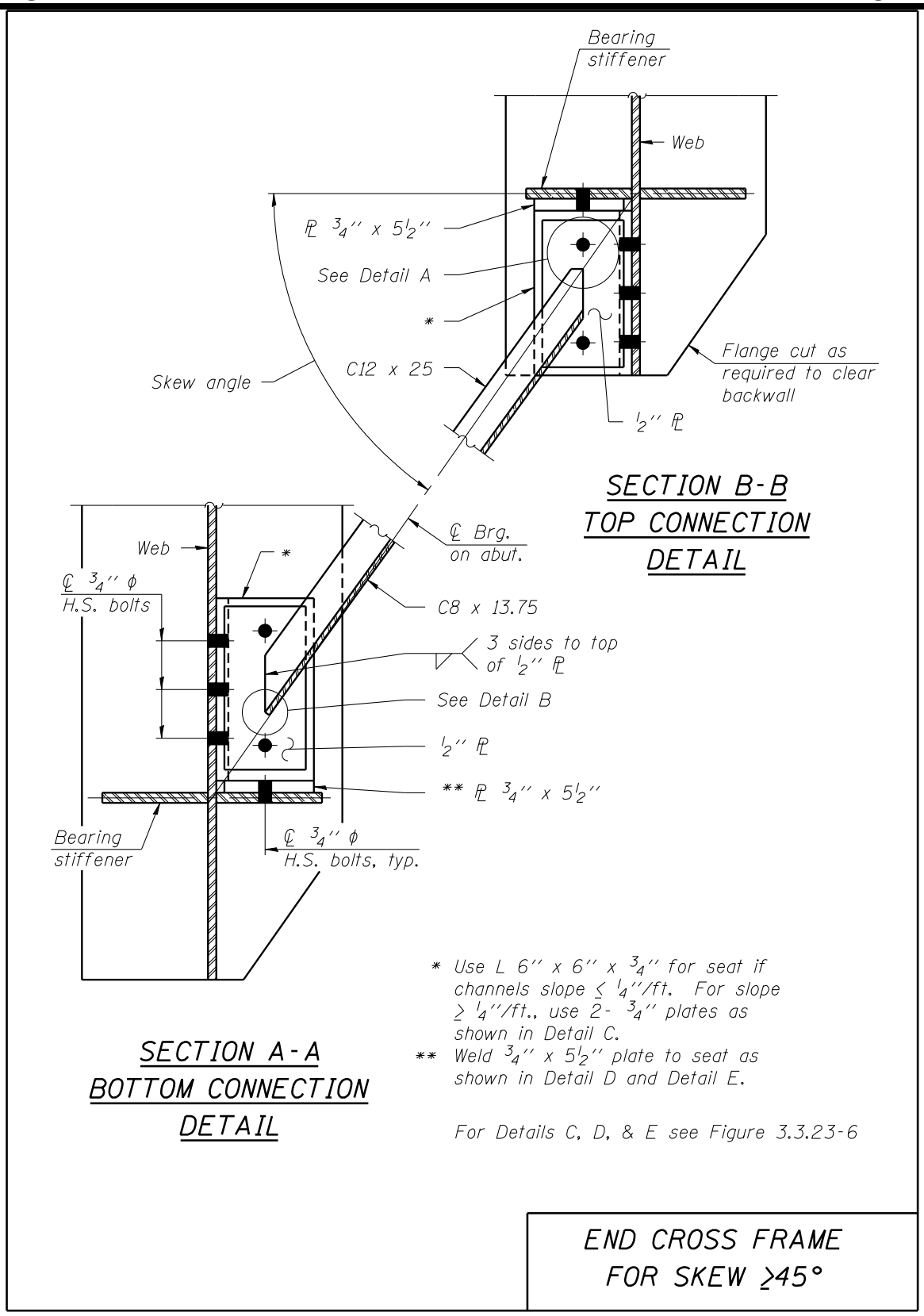

Figure 3.3.23-5

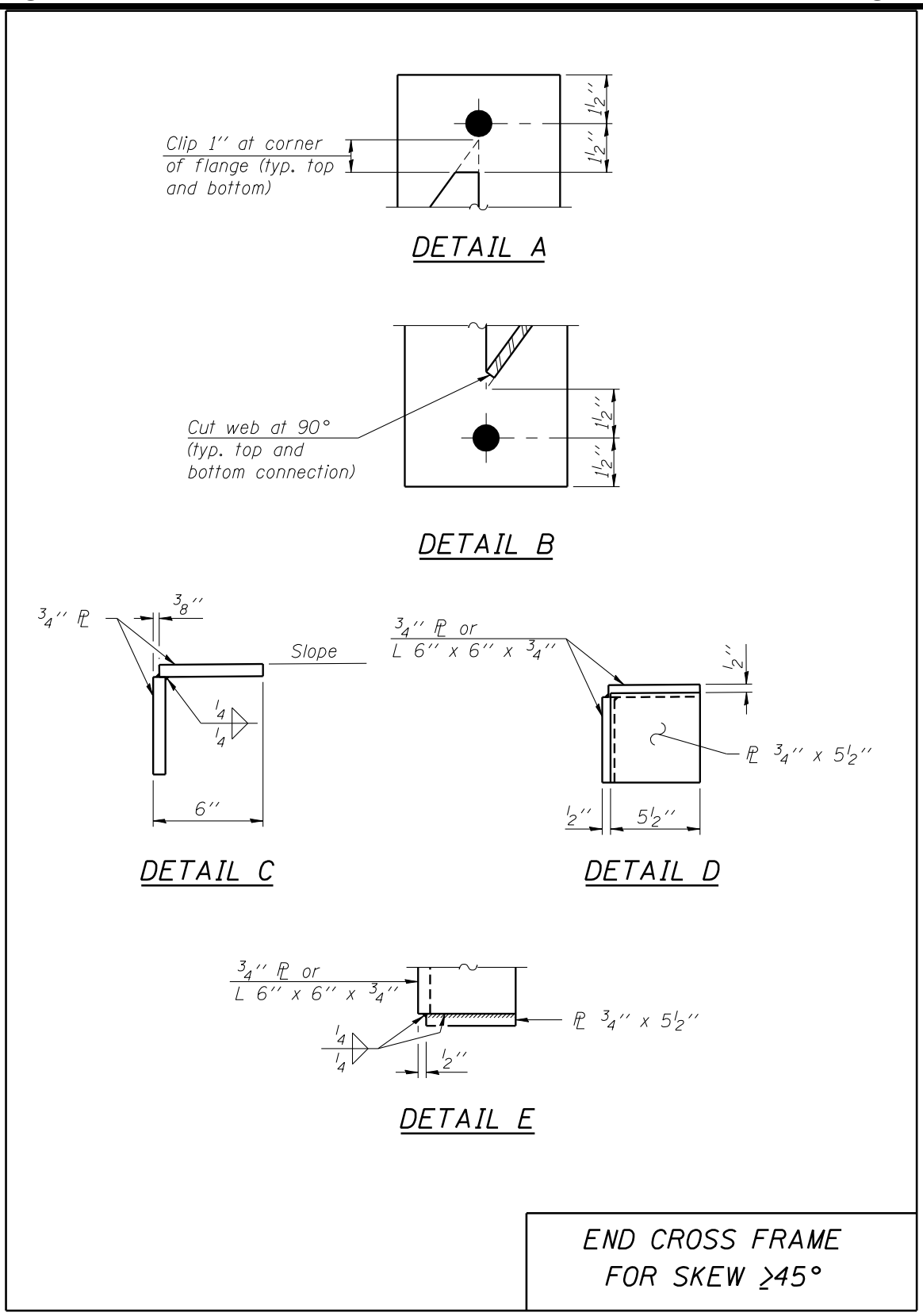

Figure 3.3.23-6

*** Cost of Timber Block Posts is included with Structural Steel.

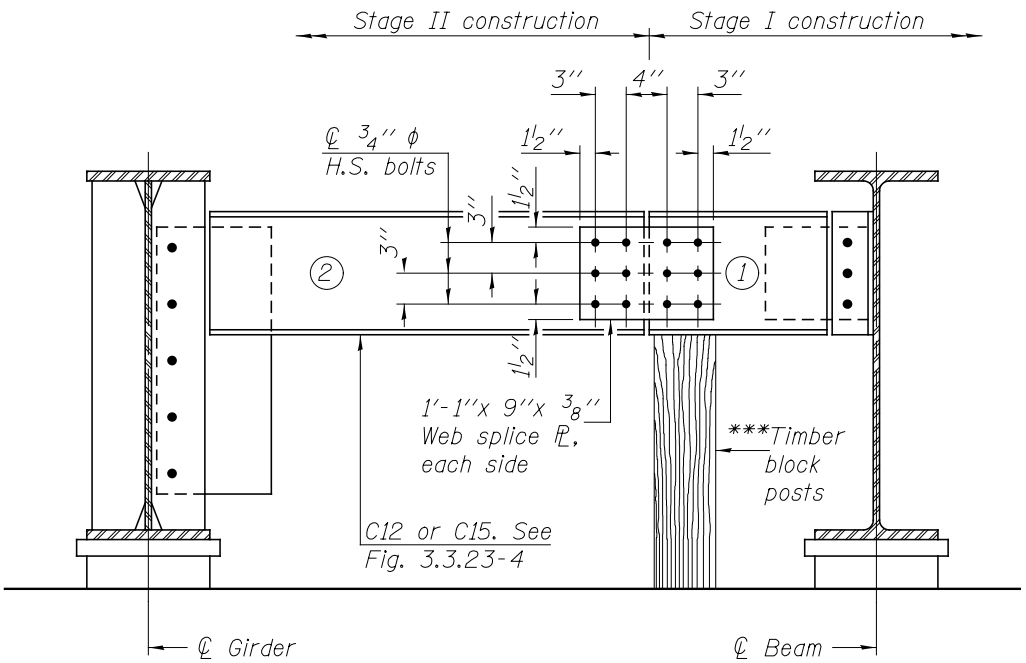

Showing diaphragm for shallow girder

Showing diaphragm for W-beam

END DIAPHRAGM

END DIAPHRAGM STAGE CONSTRUCTION SEQUENCE

1.) Order Diaphragm in two sections.
2.) Attach section (1) of Diaphragm to Beam .
3.) Place Timber Block Posts between section (1) of diaphragm and abutment bearing section.
4.) Attach section (2) of diaphragm to both Beam and section (1) of diaphragm during Stage II Construction with splice plates.
5.) Remove Timber Block Posts.

Note:
For PL girder >48'' deep, use detail above with top C12 only and install lower portion of CF after stage II.

END DIAPHRAGM STAGE CONSTRUCTION SEQUENCE

Figure 3.3.23-7

3.3.23.1 End Diaphragms and Frames at Finger Plate and Modular Joints

End diaphragm and cross frame details for bridges with finger plate or modular joints are given in Figures 3.3.23.1-1 through 3.3.23.1-4. For shallow plate girder sections (web depths not greater than 48 in.), the details are presented in Figure 3.3.23.1-1. Cross frame details for deep plate girder sections (web depths greater than 48 in.) and skews angles less than 45° are given in Figure 3.3.23.1-2. For skews angles greater than or equal to 45°, details are presented in Figures 3.3.23.1-3 and 3.3.23.1-4.

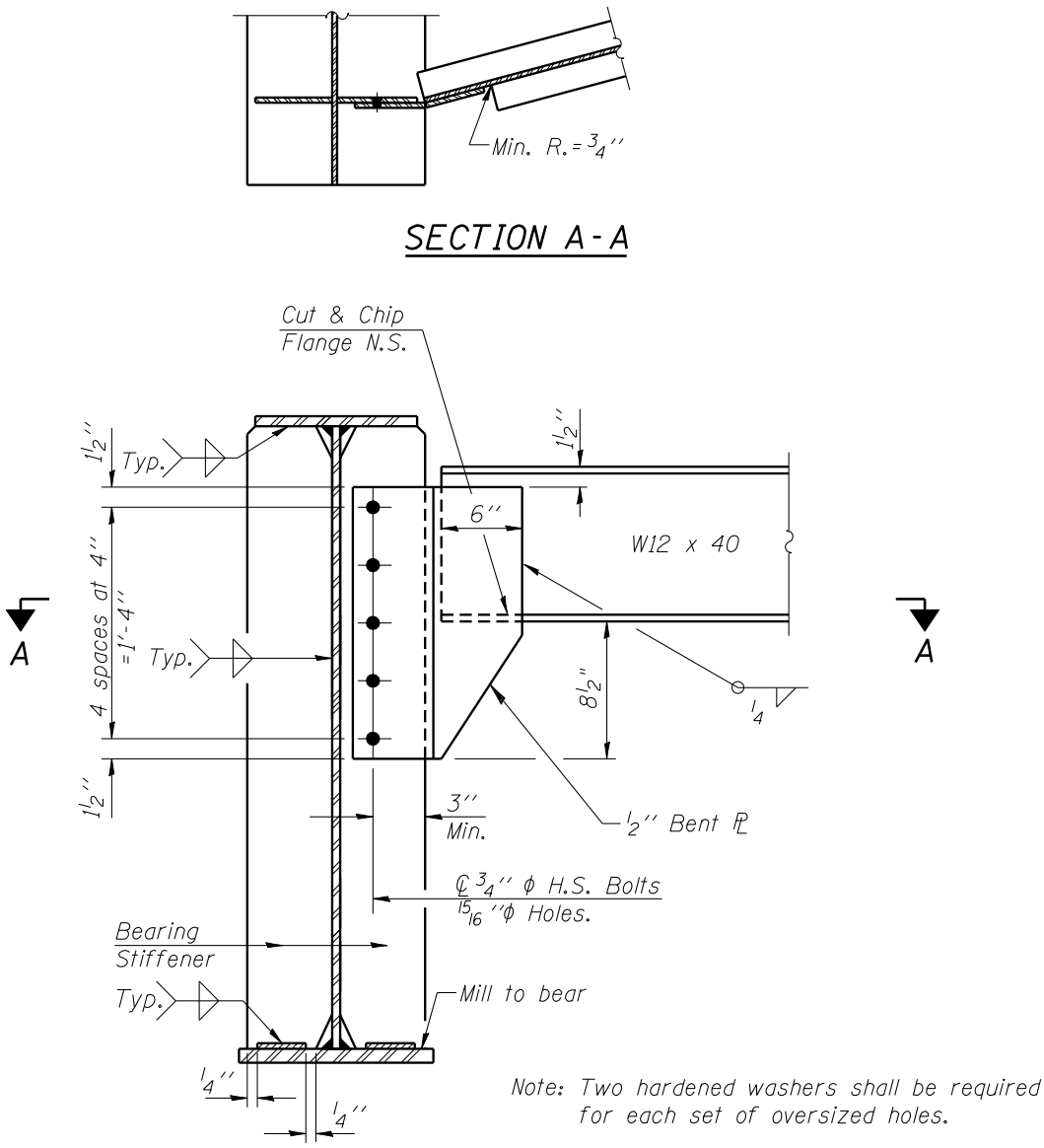

DIAPHRAGM CONNECTION FOR FINGER PLATE AND MODULAR JOINTS

Figure 3.3.23.1-1

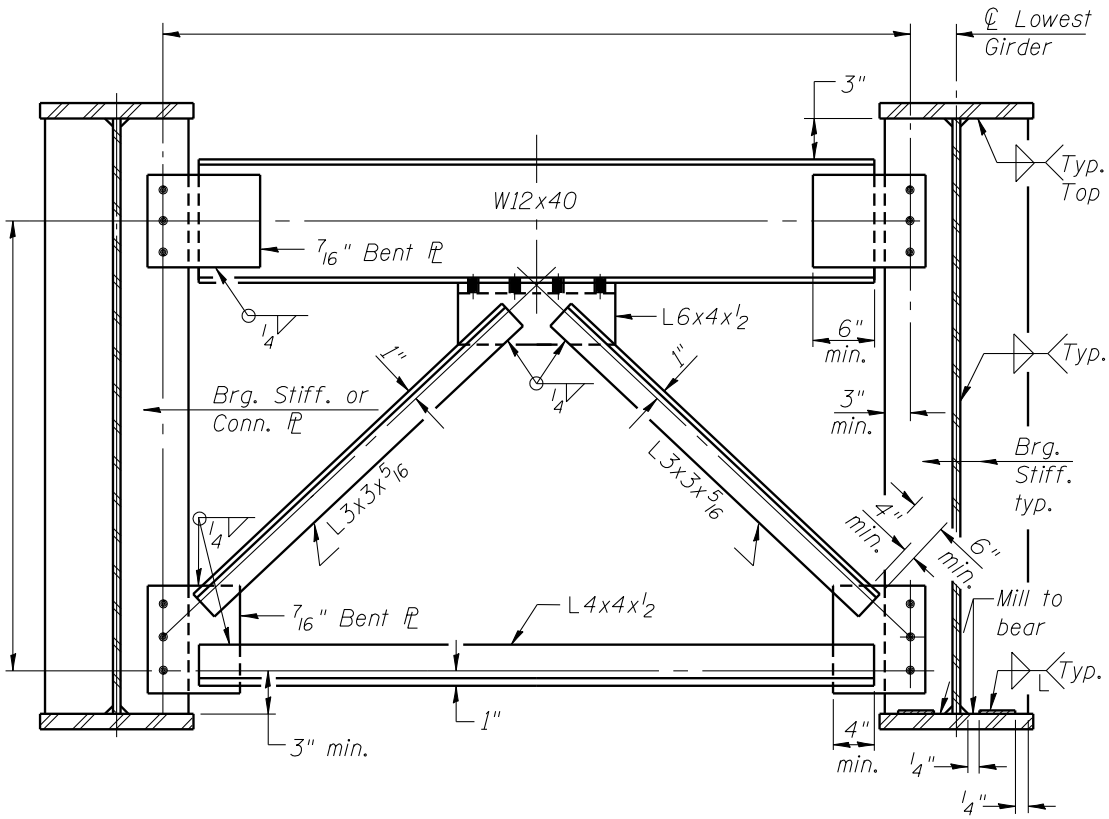

TYPICAL END CROSS FRAME

(For Welded Girders greater than 48" in depth)

Notes: Detail 15/16" ϕ holes for all 3/4" ϕ bolts.
1 1/16" ϕ holes for all 7/8" ϕ bolts.
Two hardened washers shall be required for each set of oversized holes.

Bearing Stiffeners shall be welded when these stiffeners are used as Connection Plates. See Section 3.3.16.

END CROSS FRAME FOR FINGER PLATE AND MODULAR JOINTS (SKEW < 45°)

Figure 3.3.23.1-2

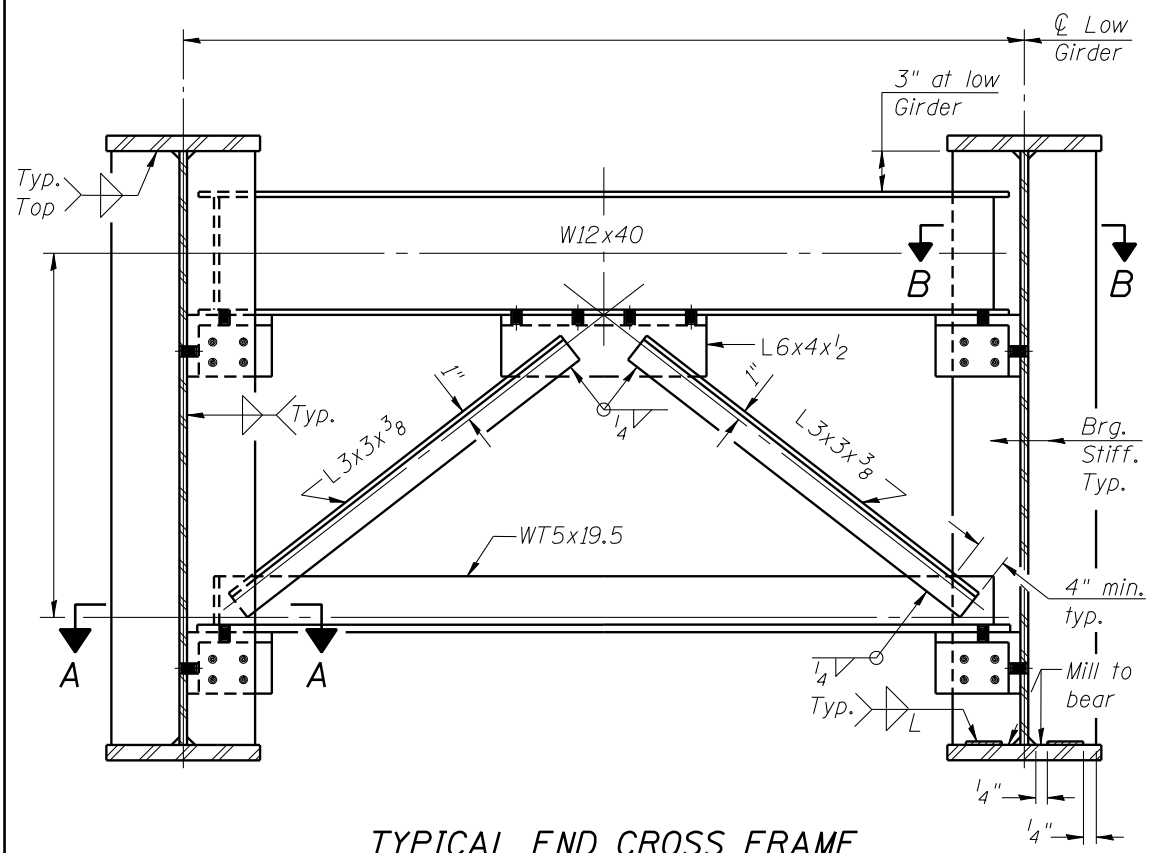

TYPICAL END CROSS FRAME

(For Welded Girders greater than 48" in depth)

Notes: Detail 15/16"ϕ holes for all 3/4"ϕ bolts.
11/16"ϕ holes for all 7/8"ϕ bolts.
Two hardened washers shall be required for each set of oversized holes.

For Sections A-A and B-B see Fig. 3.3.23.1-4.

END CROSS FRAME FOR FINGER PLATE AND MODULAR JOINTS (SKEW ≥ 45°)

Figure 3.3.23.1-3

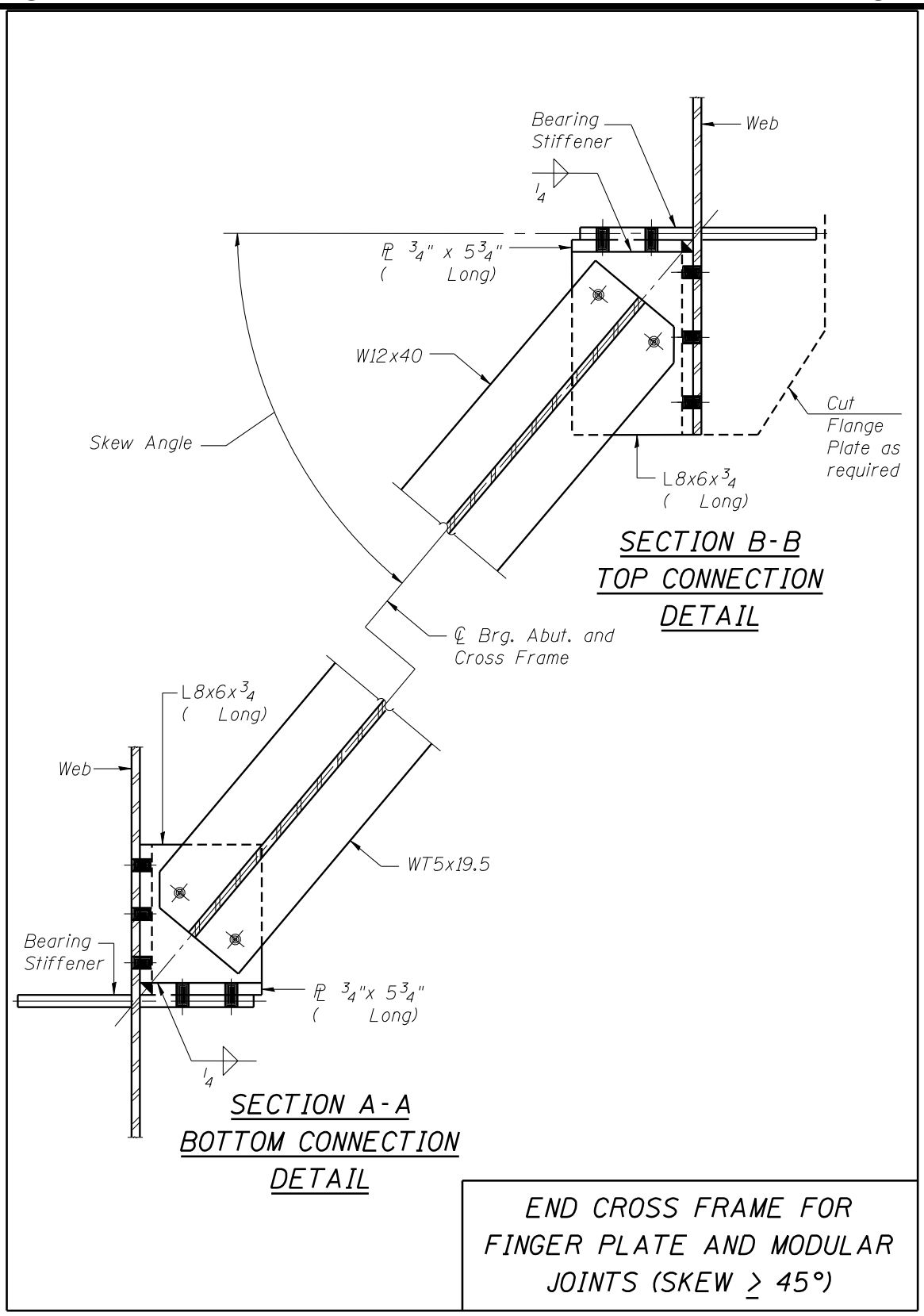

Figure 3.3.23.1-4

3.3.24 Erection and Holes in Diaphragms, Cross Frames & Lateral Bracing Members

To facilitate erection, bolted connections for steel diaphragms, cross frames and lateral bracing members in structures not designed for the effects of curvature shall be detailed with oversize holes ($\frac{3}{16}$ in. larger than the nominal bolt diameter) in both plies, as shown in Figures 3.3.22-1 through 3.3.22-4, 3.3.23-1 through 3.3.23-7 and 3.3.23.1-1 through 3.3.23.1-4. Oversized holes shall have hardened washers in accordance with the Research Council on Structural Connections (RCSC) Specifications for high strength bolt installation.

Standard size holes ($\frac{1}{16}$ in. larger than the nominal bolt size) shall be detailed for all diaphragm and/or cross frame connections on curved steel structures where the effects of curvature are required to be considered in the determination of major-axis bending moments (i.e. the structure is "significantly curved"). However, the connections for cross frame and/or diaphragms shall be designed assuming the holes are oversized. The reduced allowable capacity for oversized holes provides an added measure of redundancy should unforeseen issues arise during fabrication and erection. The General Notes (See Section 3.1.3) indicate the default hole and bolt sizes, so only bolt and/or hole diameters differing from the default shall be identified on the plan details.

The Contract plans for significantly curved steel structures shall provide the calculated vertical deflections due to steel self-weight at quarter points along each span for each primary girder/beam in diagrammatic and/or tabular format on the steel framing sheet. The following note shall be associated with the calculated deflections of significantly curved structures on the Contract plans:

> *The calculated deflections of the primary girders/beams under steel self-weight shall be used to detail the diaphragm, cross frame and lateral bracing connections, and to erect the structural steel such that the girders/beams will be plumb within a tolerance of ±⅛ in. per vertical ft. throughout when supporting their own weight.*

Field reaming enlarges holes and can adversely affect a significantly curved structure's intended geometry and behavior under design dead, live and/or construction loadings. When field reaming is excessive, reanalysis, revised design, and construction delays may result. Consequently, consideration of constructibility should be emphasized by the designer to help avoid potential problems during construction and fabrication. In addition, the following note shall be added to the Contract plans for all significantly curved structures on the steel framing sheet:

The Contractor shall either:

1. *Ream diaphragm and/or cross frame connection holes during shop assembly, or*
2. *Provide detailing and fabrication controls acceptable to the Engineer which ensures accuracy such that field reaming will not exceed the amount permitted in Article 505.08(l) of the Standard Specifications.*

For all curved girder/beam structures, the designer shall fully investigate at least one erection sequence to ensure feasibility for construction. The Contract plans and/or Special Provisions shall require the submittal of a comprehensive Steel Erection plan detailing the proposed methods, procedures, and plans for the erection of the structural steel to the desired lines, elevations, and geometry indicated in the Contract plans. Erection plans shall be complete in detail for all phases of the erection process and shall describe the erection procedures, sequences, geometry controls and adjustment procedures, temporary shoring or bracing, bearing and anchor bolt placement, bolt installation and tightening procedures, and shall include any necessary drawings and calculations. The Erection plan shall be prepared and sealed by and Illinois Licensed Structural Engineer and shall be submitted to the Engineer for review and acceptance.

3.3.25 Intermediate Diaphragm or Cross Frame Connections for Stage Construction

Diaphragms shall not be omitted beneath stage construction lines.

For structures not designed for significant curvature with maximum differential displacements up to 1 in., standard long slots ($^{13}/_{16}$ in. x 1 ⅞ in. for ¾ in. bolts, $^{15}/_{16}$ in. x 2$^{3}/_{16}$ in. for ⅞ in. bolts) shall be detailed in one end of the bracing and standard oversize holes shall be provided at the other end and in the main member connection plates. For structures with maximum differential displacements greater than 1 in., the designer shall investigate combinations of long slots in both the bracing and main member connection plates to accommodate the differential displacements. Include a note that bolts in slots shall be finger tight until the second stage pour is complete, and position slots so bolts start at one end with no concrete load and finish near the opposite end under deck load, allowing maximum displacement without laterally stressing main members. All holes shall have appropriate hardened or plate washers. Long slots shall not be detailed on webs of members. Structure plans shall clearly detail the initial erected position of slots and bolts.

For straight bridges with differential displacements exceeding 2 ½ in., a closure pour and articulated temporary bracing are used to avoid concrete quality problems. The temporary brace has only top and bottom horizontal struts with one bolt at each end through permanent connection holes permitting vertical movement while maintaining lateral spacing. Bolts connecting the temporary bracing should be ⅛ in. larger than permanent bolts ($\frac{1}{16}$ in. smaller than the holes) to better maintain alignment. After the differential displacements due to stage construction have been eliminated, temporary braces are replaced by permanent braces with standard oversize holes.

For staged re-decking of existing structures with large differential displacements between stages, or in cases where jacking existing beams or girders with large differential displacements where removal of diaphragms or cross-frames is required, the designer shall evaluate the system for stability and provide details in the structure plans for the removal work and any required temporary bracing.

Structures designed for significant curvature require standard size holes for bracing connections, so if stage construction is necessary, special bracing details shall be developed and accepted by the Department on a case-by-case basis.

3.3.26 Constructability

LRFD and LFD

Designers shall investigate constructability concerns, including strength, local and global stability, and deflections, at applicable stages of construction including, fully erected girders only condition, and during placement of the concrete deck according to plan sequence, in addition to final condition checks.

Constructibility requirements for LRFD are given in Article 6.10.3 and for LFD are found in Article 10.61. Stability (which includes local and lateral torsional buckling considerations) and the prevention of initial onset of yielding for the beams in the superstructure are the primary considerations during construction of the superstructure. Also see Articles 503.06 and 505.08 of the IDOT Standard Specifications which cover construction of the deck and steel erection, respectively.

The dead loads actually present during each stage of construction should be considered when checking constructibility. For typical bridges, this normally entails the dead weight of the beams, the cross frames or diaphragms, the falsework, and the uncured non-composite deck. The Department also requires that a minimum live load of 20 psf should be considered for both the LRFD and LFD Specifications. This minimum live load accounts for the weight of the finishing machine and other construction loads. The load factors for constructibility using LRFD are given in Article 3.4.2. For LFD, the load factor for both dead and live load should be taken as 1.3.

Note that the f_l term in Article 6.10.3.2 of LRFD is normally zero for routine bridges if Article 503.06 of the IDOT Standard Specifications is satisfied. See Section 3.3.5 and Design Guide 3.3.4 for additional information.

3.3.27 Minimum Steel Plate Thicknesses

The recommended minimum steel plate thicknesses for bridge construction are summarized in Table 3.3.27-1 below.

Minimum Steel Plate Thicknesses

(Inches)

Top Flange of Plate Girder	¾
Plate Girder Web	7/16
Intermediate Vertical Stiffeners	7/16
Flange Splice Plates	½

Table 3.3.27-1

3.3.28 Computation of Structural Steel Quantities

The weights of structural steel plates including an allowance for 50% of the permissible overweight given in ASTM-A6 in accordance with Article 505.12 of the Standard Specifications are given in Section 4.1. All quantity computations for structural steel shall be based on these weights. Note as well that the weight of bolts is included in the quantity of structural steel but the weight of field weld metal is not.

3.4 PPC I-Beams and PPC Bulb T-Beams

This section covers the Department's policies and details related to prestressed concrete designs per the LRFD specifications. For LFD policies and details please refer to ABD memorandum 06.4.

3.4.1 Distribution of Loads to Beams

Sections 3.3.1 and 3.3.2 provide guidance and methods for the distribution of vertical loadings to PPC I-beams and bulb T-beams for the LRFD Design Specifications. Included are simplified methods developed by the Department for vehicular live load distribution as well as guidance on the distribution of dead loads using the LRFD code.

3.4.2 Design of PPC I-Beams and PPC Bulb T-Beams – General

The basic mechanics used to design PPC I-beams and PPC Bulb T-beams according to the AASHTO LRFD and LFD are similar. Section 5 of LRFD contains unified provisions for both prestressed and non-prestressed reinforced concrete construction. Ultimate strength design of beams in simple span bridges and in positive moment regions of continuous span structures shall be according to the basic principles of prestressed concrete design. Over piers of continuous span bridges, the principles of non-prestressed concrete design shall be used with the reinforcement in the deck acting as the tensile portion of the resisting moment couple. The member shall be assumed to be fully continuous with a constant moment of inertia when determining moments due to composite loads. The design of beams for continuous span bridges shall be the same as for simple spans, except that for the composite dead load and live load plus impact, the beams shall be treated as continuous over the intermediate supports.

Design Guide 3.4 presents detailed guidance and example calculations for PPC beam design using the LRFD code.

For multi-span bridges where the number of strands required in each span does not vary by more than 15%, the designer should specify the strand pattern required for the longest span provided the minimum span length requirements (shown in Tables 3.4.4.1-1 through 3.4.4.1-12) are met. This allows for greater economy and simplicity during fabrication.

3.4.3 Stress Limits

Prestressing steel for all new PPC beam construction shall be uncoated 7-wire, low-relaxation (low-lax) strands with a nominal diameter of ½ in. and an ultimate strength of 270 ksi. Strands with a nominal diameter of 0.6 in. are not permitted. Stress relieved strands are not permitted for new construction of PPC beams.

The stress limits for low-lax strands immediately prior to transfer shall be according to LRFD Table 5.9.3-1 as follows:

f_{pu} = 270 ksi
f_{pbt} = 0.75 f_{pu} (low-relaxation strands)

Where:

f_{pu} = ultimate tensile strength of prestressing steel (ksi)
f_{pbt} = initial stress limit in prestressing steel prior to transfer and before losses (ksi)

Table 3.4.3-1 tabulates force and stress limits for prestressing strands.

TABLE OF STANDARD PRESTRESSING LOAD (Low Relaxation)			
Nominal Diameter	Nominal Steel Area	Initial Prestressing Force (F_i)	Initial Steel Stress Limit (f_{pbt})
Inch	Sq Inch	kips	ksi
1/2	0.153	30.9	201.96

Table 3.4.3-1

The initial prestressing force was calculated and rounded down to the nearest tenth of a kip (based on the typical accuracy of the fabricator's prestressing equipment). The initial steel stress limit was then back calculated to produce that prestressing force.

Plain (non-prestressed) reinforcement shall be ASTM A706 Gr. 60 with the yield stress used for design taken as 60 ksi. Non-prestressed concrete used for bridge decks shall be assumed to have an ultimate compressive strength of 3.5 ksi.

3.4.4 Strand Pattern Charts for Moment

Standard strand patterns for use with the standard IDOT I-beam and bulb T-beam shapes have been developed for the LRFD design code. These patterns should be utilized by designers in most typical bridge applications. When special cases warrant a non-standard strand pattern, the BBS should be contacted.

Planning strand pattern selection charts for LRFD design located in Section 2.3.6.1.3 should be used in conjunction with the tables located in Section 3.4.4.1. The planning selection charts are tools which allow the designer to choose an appropriate trial strand pattern for a given beam cross section, span length, beam spacing and span type (simple or continuous). The designer shall verify by calculations that the final strand pattern is adequate.

3.4.4.1 Strand Patterns for Simple and Continuous Span Applications

Tables 3.4.4.1-1 through 3.4.4.1-12 detail the developed standard strand patterns for single and multi-span bridges for beams designed according to the LRFD Specifications. The eccentricity "e" shown in the tables equals the distance from the centroid of the strand pattern to the neutral axis of the beam. Figure 3.4.4.1-1 provides a key for understanding the naming conventions associated with the standard strand patterns. Standard locations for strands within beam cross sections (standard grid) can be found in the figures located in Section 3.4.4.2.

For most cases the standard strand patterns should satisfy all the design requirements. However there could be some situations where a modification will need to be made. These modifications shall be limited to draping additional strands up to a maximum of 16 and increasing the concrete strength up to a maximum of 7000 psi. In addition these modifications should only be used to satisfy stress limits and not be used to increase the span lengths past the maximums shown in the charts. In the event that a designer wants to exceed these limits the Bureau of Bridge and Structures shall be contacted for further disposition.

The standard LRFD strand patterns were developed based upon the following criteria:

1. ½ in. diameter low-relaxation 7 wire strands with an ultimate strength, f_{pu}, of 270 ksi.
2. Ultimate concrete compressive strengths for beams of 6 and 7 ksi with release strengths of 5 and 6 ksi, respectively. Ultimate concrete compressive strength for decks of 3.5 ksi.
3. HL-93 live loading using simplified distribution methods outlined in Section 3.3.1.
4. 8 in. thick concrete deck.
5. 1 in. average fillet height for dead load only (not included in section properties).
6. 6 beam lines.
7. Standard F-shape concrete barrier with a weight of 0.45 k/ft.
8. 50 psf future wearing surface.
9. Multi-span tables and charts based upon 2 equal spans.

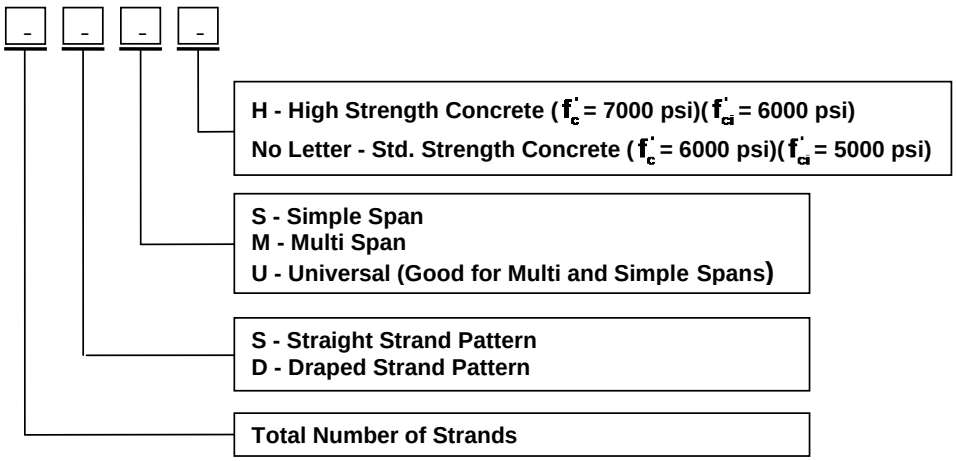

Figure 3.4.4.1-1

LRFD 36" I-Beam Simple Span Strand Patterns

Strand Pattern	Location	Row Numbers																	e (Inches)	Min. Span (Feet)
		1	2	3	4	5	6	7	8		1T	2T	3T	4T	5T	6T	7T	8T		
14SU	Center	2	2	4	2	2	2												8.513	-
	End	2	2	4	2	2	2												8.513	
14DS	Center	4	4	4	2														10.799	37
	End	4	4	4							2								7.227	
16DS	Center	4	4	4	4														10.370	37
	End	4	4	4	2						2								7.245	
18DS	Center	6	4	4	4														10.703	47
	End	6	4	2	2						2	2							5.148	
20DSH	Center	6	6	4	2	2													10.570	48
	End	6	6	4							2	2							5.970	

Table 3.4.4.1-1

LRFD 36" I-Beam Multi-Span Strand Patterns

Strand Pattern	Location	Row Numbers																	e (Inches)	Min. Span (Feet)
		1	2	3	4	5	6	7	8		1T	2T	3T	4T	5T	6T	7T	8T		
14SU	Center	2	2	4	2	2	2												8.513	-
	End	2	2	4	2	2	2												8.513	
14DM	Center	4	4	4	2														10.799	37
	End	4	4	2							2	2							3.656	
16DM	Center	4	4	4	4														10.370	37
	End	4	2	2	2						2	2	2						0.995	
18DM	Center	6	4	4	2	2													10.481	45
	End	6	2	2							2	2	2	2					0.259	
20DMH	Center	6	4	4	4	2													10.170	42
	End	6	2	2	2						2	2	2	2					0.970	

Table 3.4.4.1-2

LRFD 42" I-Beam Simple Span Strand Patterns

Strand Pattern	Location	Row Numbers																	e (Inches)	Min. Span (Feet)
		1	2	3	4	5	6	7	8		1T	2T	3T	4T	5T	6T	7T	8T		
16SU	Center	2	4	4	2	2	2												11.152	-
	End	2	4	4	2	2	2												11.152	
18SS	Center	2	4	4	4	2	2												10.985	-
	End	2	4	4	4	2	2												10.985	
18DS	Center	8	8	2															14.319	50
	End	8	8								2								10.652	
20DS	Center	8	8	4															14.052	53
	End	8	6	2							2	2							7.452	
22DS	Center	8	8	6															13.834	56
	End	8	6	4							2	2							7.834	
24DS	Center	8	8	8															13.652	59
	End	8	6	6							2	2							8.152	
26DSH	Center	10	10	4	2														13.806	62
	End	10	8	2							2	2	2						6.652	
28DSH	Center	10	10	6	2														13.652	64
	End	10	8	4							2	2	2						7.009	

Table 3.4.4.1-3

LRFD 42" I-Beam Multi-Span Strand Patterns

Strand Pattern	Location	Row Numbers																	e (Inches)	Min. Span (Feet)
		1	2	3	4	5	6	7	8		1T	2T	3T	4T	5T	6T	7T	8T		
16SU	Center	2	4	4	2	2	2												11.152	-
	End	2	4	4	2	2	2												11.152	
16DM	Center	8	8																14.652	47
	End	8	6								2								10.277	
18DM	Center	8	8	2															14.319	50
	End	8	6								2	2							6.985	
20DM	Center	8	8	2	2														13.852	51
	End	8	6								2	2	2						4.552	
22DMH	Center	10	8	2	2														14.016	55
	End	8	6								2	2	2	2					2.743	
24DMH	Center	10	8	2	2	2													13.485	55
	End	8	6								2	2	2	2	2				1.402	
26DMH	Center	10	8	2	2	2	2												12.883	52
	End	8	6								2	2	2	2	2	2			0.421	
28DMH	Center	10	8	2	2	2	2	2											12.223	48
	End	8	6								2	2	2	2	2	2	2		-0.277	

Table 3.4.4.1-4

LRFD 48" I-Beam Simple Span Strand Patterns

Strand Pattern	Location	Row Numbers																	e (Inches)	Min. Span (Feet)
		1	2	3	4	5	6	7	8		1T	2T	3T	4T	5T	6T	7T	8T		
18SU	Center	2	4	4	2	2	2	2											13.755	-
	End	2	4	4	2	2	2	2											13.755	
20SS	Center	2	2	4	4	4	2	2											13.088	-
	End	2	2	4	4	4	2	2											13.088	
20DU	Center	8	8	4															17.488	54
	End	8	6	2							2	2							9.688	
22DS	Center	10	10	2															17.815	61
	End	10	8								2	2							10.724	
24DS	Center	10	10	4															17.588	64
	End	10	8	2							2	2							11.088	
26DS	Center	10	10	6															17.396	67
	End	10	8	4							2	2							11.396	
28DS	Center	10	10	6	2														17.088	69
	End	10	8	4							2	2	2						9.159	
30DSH	Center	10	10	6	2	2													16.688	67
	End	10	8	4							2	2	2	2					7.355	
32DSH	Center	10	10	8	2	2													16.588	70
	End	10	8	6							2	2	2	2					7.838	

Table 3.4.4.1-5

LRFD 48" I-Beam Multi-Span Strand Patterns

Strand Pattern	Location	Row Numbers																	e (Inches)	Min. Span (Feet)
		1	2	3	4	5	6	7	8		1T	2T	3T	4T	5T	6T	7T	8T		
18SU	Center	2	4	4	2	2	2	2											13.755	-
	End	2	4	4	2	2	2	2											13.755	
18DM	Center	8	8	2															17.755	50
	End	8	8								2								13.421	
20DU	Center	8	8	4															17.488	54
	End	8	6	2							2	2							9.688	
22DM	Center	8	8	6															17.270	57
	End	6	6	4							2	2	2						6.633	
24DMH	Center	10	10	2	2														17.421	61
	End	10	8								2	2	2						8.171	
26DMH	Center	10	10	4	2														17.242	64
	End	8	8	2							2	2	2	2					5.857	
28DMH	Center	10	10	4	2	2													16.802	64
	End	8	8	2							2	2	2	2	2				4.302	
30DMH	Center	10	10	4	2	2	2												16.288	64
	End	8	8	2							2	2	2	2	2	2			3.088	
32DMH	Center	10	10	4	2	2	2	2											15.713	62
	End	8	8	2							2	2	2	2	2	2	2		2.151	

Table 3.4.4.1-6

LRFD 54" I-Beam Simple Span Strand Patterns

Strand Pattern	Location	Row Numbers																	e (Inches)	Min. Span (Feet)
		1	2	3	4	5	6	7	8		1T	2T	3T	4T	5T	6T	7T	8T		
18SU	Center	2	4	4	4	2	2												18.303	-
	End	2	4	4	4	2	2												18.303	
20SS	Center	2	4	4	4	2	2	2											17.570	-
	End	2	4	4	4	2	2	2											17.570	
20DS	Center	10	10																21.970	50
	End	10	8								2								17.270	
22DS	Center	10	10	2															21.697	55
	End	10	8								2	2							13.515	
24DS	Center	10	10	4															21.470	59
	End	10	8	2							2	2							13.970	
26DS	Center	10	10	6															21.278	62
	End	8	8	4							2	2	2						10.893	
28DS	Center	10	10	8															21.113	66
	End	8	8	6							2	2	2						11.470	
30DS	Center	10	10	8	2														20.837	75
	End	10	8	6							2	2	2						12.237	
32DSH	Center	10	10	8	4														20.595	67
	End	8	8	6	2						2	2	2	2					9.845	

Table 3.4.4.1-7

LRFD 54" I-Beam Multi-Span Strand Patterns

Strand Pattern	Location	Row Numbers																	e (Inches)	Min. Span (Feet)
		1	2	3	4	5	6	7	8		1T	2T	3T	4T	5T	6T	7T	8T		
18SU	Center	2	4	4	4	2	2												18.303	-
	End	2	4	4	4	2	2												18.303	
18DM	Center	10	8																22.081	44
	End	10	6								2								16.859	
20DM	Center	10	10																21.970	50
	End	8	8								2	2							12.570	
22DM	Center	10	10	2															21.697	55
	End	8	8								2	2	2						9.425	
24DMH	Center	10	10	2	2														21.303	53
	End	10	8								2	2	2						10.553	
26DMH	Center	10	10	4	2														21.124	58
	End	8	8	2							2	2	2	2					7.893	
28DMH	Center	10	10	4	2	2													20.684	59
	End	8	8	2							2	2	2	2	2				6.041	
30DMH	Center	10	10	4	2	2	2												20.170	59
	End	8	8	2							2	2	2	2	2	2			4.570	
32DMH	Center	10	10	4	2	2	2	2											19.595	58
	End	8	8	2							2	2	2	2	2	2	2		3.408	

Table 3.4.4.1-8

LRFD 63" Bulb T-Beam Simple Span Strand Patterns

Strand Pattern	Location	Row Numbers																	e (Inches)	Min. Span (Feet)
		1	2	3	4	5	6	7	8		1T	2T	3T	4T	5T	6T	7T	8T		
20SU	Center	4	6	6	4														27.120	-
	End	4	6	6	4														27.120	
22SS	Center	4	6	6	4	2													26.665	-
	End	4	6	6	4	2													26.665	
22DS	Center	12	10																29.211	39
	End	12	8								2								24.120	
24DS	Center	12	12																29.120	48
	End	12	10								2								24.453	
26DS	Center	12	12	2															28.889	53
	End	12	10								2	2							20.582	
28DS	Center	12	12	4															28.691	58
	End	12	10	2							2	2							20.977	
30DS	Center	12	12	6															28.520	63
	End	12	10	4							2	2							21.320	
32DS	Center	12	12	8															28.370	80
	End	10	10	6							2	2	2						18.245	
34DSH	Center	12	12	8	2														28.120	64
	End	10	10	6							2	2	2	2					15.885	
36DSH	Center	12	12	8	2	2													27.787	66
	End	10	10	6							2	2	2	2	2				13.898	

Table 3.4.4.1-9

LRFD 63" Bulb T-Beam Multi-Span Strand Patterns

Strand Pattern	Location	Row Numbers																	e (Inches)	Min. Span (Feet)
		1	2	3	4	5	6	7	8		1T	2T	3T	4T	5T	6T	7T	8T		
20SU	Center	4	6	6	4														27.120	-
	End	4	6	6	4														27.120	
20DM	Center	12	8																29.320	34
	End	12	6								2								23.720	
22DM	Center	12	10																29.211	39
	End	10	8								2	2							19.029	
24DM	Center	12	10	2															28.953	46
	End	10	8								2	2	2						15.453	
26DM	Center	12	10	2	2														28.582	51
	End	10	8								2	2	2	2					12.582	
28DMH	Center	12	10	2	2	2													28.120	45
	End	12	8								2	2	2	2					13.834	
30DMH	Center	12	10	2	2	2	2												27.587	47
	End	12	8								2	2	2	2	2				11.587	
32DMH	Center	12	10	2	2	2	2	2											26.995	47
	End	12	8								2	2	2	2	2	2			9.745	
34DMH	Center	12	10	2	2	2	2	2	2										26.355	45
	End	12	8								2	2	2	2	2	2	2		8.238	
36DMH	Center	12	12	2	2	2	2	2	2										26.453	52
	End	10	10								2	2	2	2	2	2	2	2	6.898	

Table 3.4.4.1-10

LRFD 72" Bulb T-Beam Simple Span Strand Patterns

Strand Pattern	Location	Row Numbers																	e (Inches)	Min. Span (Feet)
		1	2	3	4	5	6	7	8		1T	2T	3T	4T	5T	6T	7T	8T		
22SU	Center	6	4	4	2	2	2	2											30.236	-
	End	6	4	4	2	2	2	2											30.236	
24SS	Center	6	4	4	2	2	2	2	2										29.433	-
	End	6	4	4	2	2	2	2	2										29.433	
24DS	Center	12	12																33.600	48
	End	12	10								2								28.183	
26DS	Center	12	12	2															33.369	55
	End	12	10								2	2							23.677	
28DS	Center	12	12	4															33.171	60
	End	12	10	2							2	2							24.171	
30DS	Center	12	12	6															33.000	65
	End	12	10	4							2	2							24.600	
32DS	Center	12	12	8															32.850	70
	End	12	10	6							2	2							24.975	
34DS	Center	12	12	8	2														32.600	82
	End	12	10	6							2	2	2						21.835	
36DSH	Center	12	12	8	4														32.378	71
	End	10	10	6	2						2	2	2	2					18.822	
38DSH	Center	12	12	8	4	2													32.074	72
	End	10	10	6	2						2	2	2	2	2				16.547	

Table 3.4.4.1-11

LRFD 72" Bulb T-Beam Multi-Span Strand Patterns

Strand Pattern	Location	Row Numbers																	e (Inches)	Min. Span (Feet)
		1	2	3	4	5	6	7	8		1T	2T	3T	4T	5T	6T	7T	8T		
22SU	Center	6	4	4	2	2	2	2											30.236	-
	End	6	4	4	2	2	2	2											30.236	
22DM	Center	12	10																33.691	38
	End	12	8								2								27.782	
24DM	Center	12	12																33.600	48
	End	10	10								2	2							22.767	
26DM	Center	12	12	2															33.369	55
	End	10	10								2	2	2						18.831	
28DM	Center	12	12	2	2														33.029	59
	End	10	10								2	2	2	2					15.600	
30DM	Center	12	12	2	2	2													32.600	62
	End	10	10								2	2	2	2	2				12.933	
32DMH	Center	12	12	2	2	2	2												32.100	58
	End	12	10								2	2	2	2	2				14.288	
34DMH	Center	12	12	2	2	2	2	2											31.541	59
	End	12	10								2	2	2	2	2	2			12.129	
36DMH	Center	12	12	2	2	2	2	2	2										30.933	59
	End	12	10								2	2	2	2	2	2	2		10.322	
38DMH	Center	12	12	4	2	2	2	2	2										30.916	64
	End	10	10	2							2	2	2	2	2	2	2	2	8.600	

Table 3.4.4.1-12

3.4.4.2 Standard Beam Cross Sections and Typical Strand Layout

The six standard IDOT beam cross sections for PPC I-beams and bulb T-beams are given in Figures 3.4.4.2-1 through 3.4.4.2-6. Included in each figure are basic cross sectional dimensions and a layout of the standard grid system for location of strands. Table 3.4.4.2-1 shows pertinent beam section properties and the dead weight of the various PPC I-beams and bulb T-beams.

Figure 3.4.4.2-7 illustrates a typical layout of strands along a prestressed beam. Included are hold down points for draped strands.

I-Beam & Bulb T-Beam Design Properties							
Beam Size	**Area** (in.2)	**I** (in.4)	**S_b** (in.3)	**S_t** (in.3)	**C_b** (in.)	**C_t** (in.)	**Weight** (lbs/ft.)
36	357.0	48648	3165.1	2358.1	15.37	20.63	375
42	464.5	90956	5152.7	3735.6	17.65	24.35	485
48	569.8	144117	6834.1	5355.1	21.09	26.91	595
54	599.0	213715	8559.0	7362.0	24.97	29.03	624
63	713.0	392638	12224.0	12715.0	32.12	30.88	743
72	767.0	545894	14915.0	15421.0	36.60	35.40	799

I = Moment of inertia of the prestressed beam.

S_b = Non-composite section modulus for the bottom fiber of the prestressed beam.

S_t = Non-composite section modulus for the top fiber of the prestressed beam.

C_b = Distance from the centroid of the prestressed beam to the bottom of the beam.

C_t = Distance from the centroid of the prestressed beam to the top of the beam.

Table 3.4.4.2-1

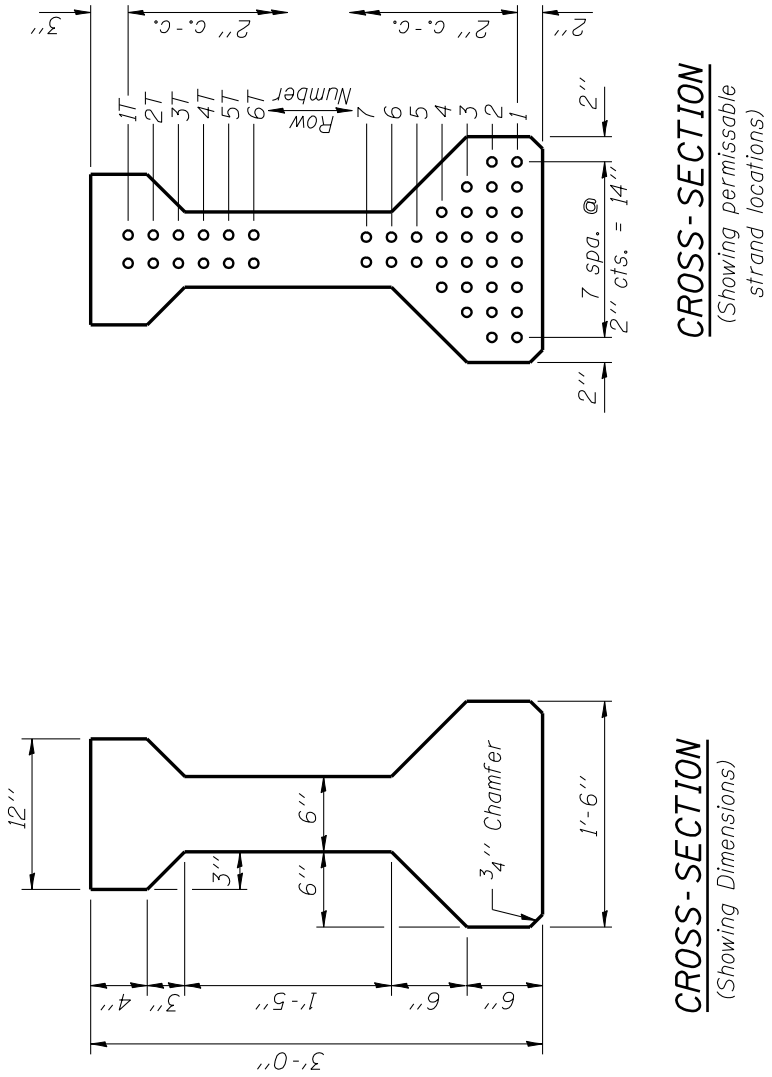

Figure 3.4.4.2-1

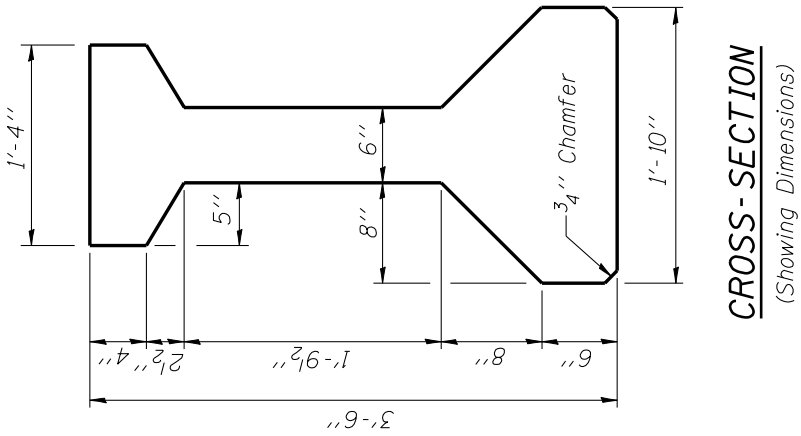

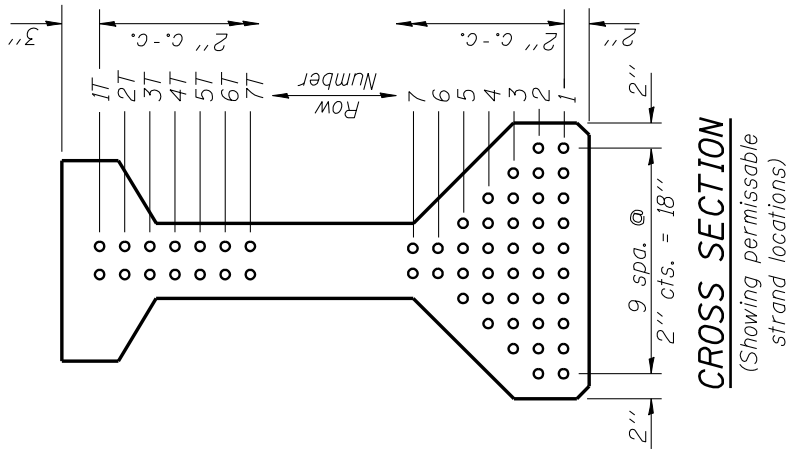

42'' I-BEAM

Figure 3.4.4.2-2

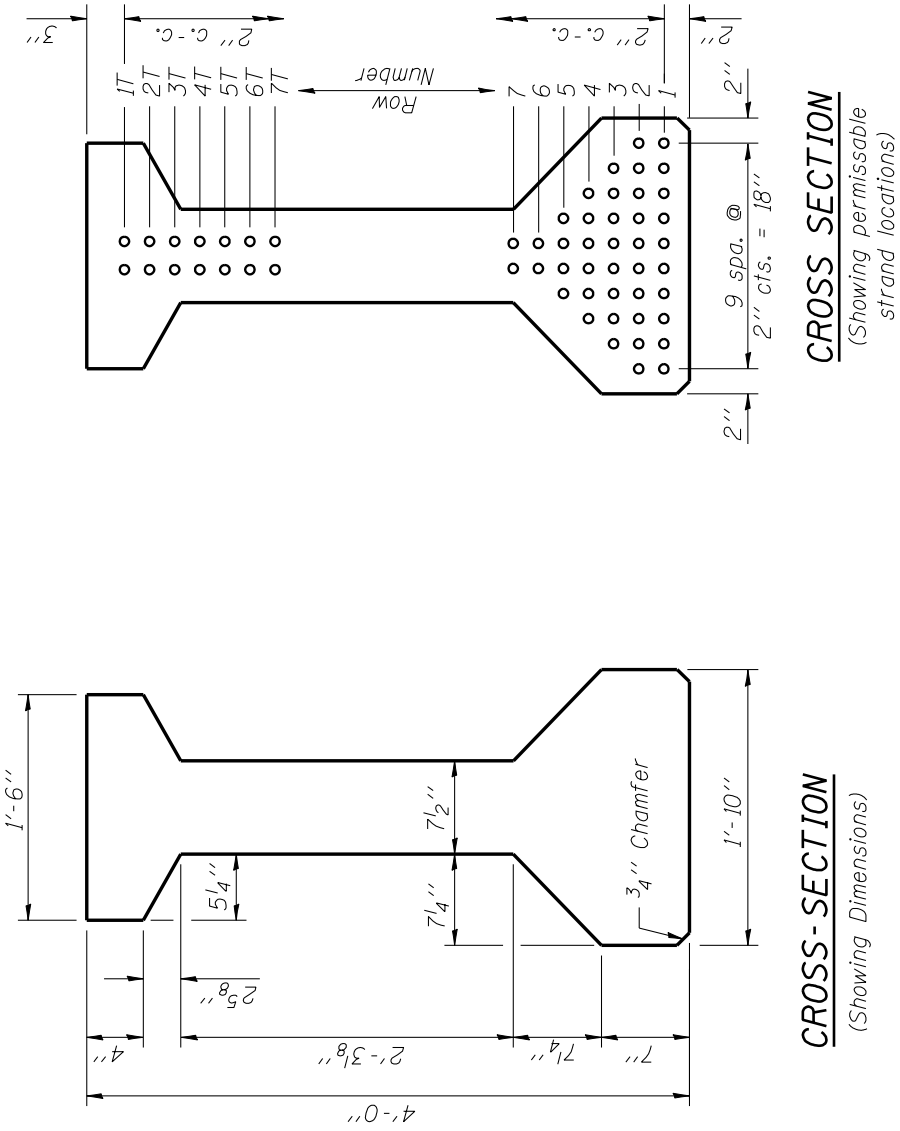

Figure 3.4.4.2-3

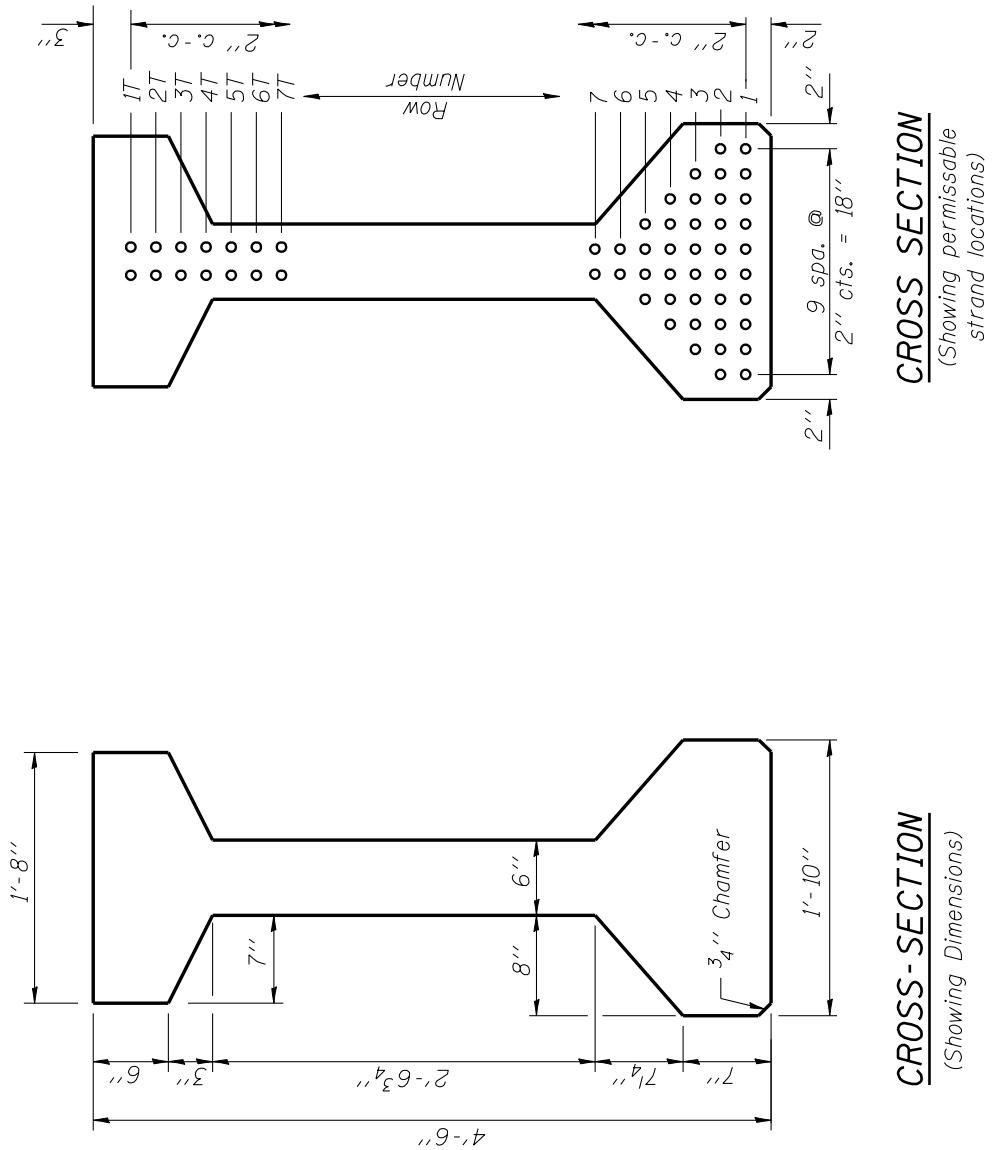

54'' I-BEAM

Figure 3.4.4.2-4

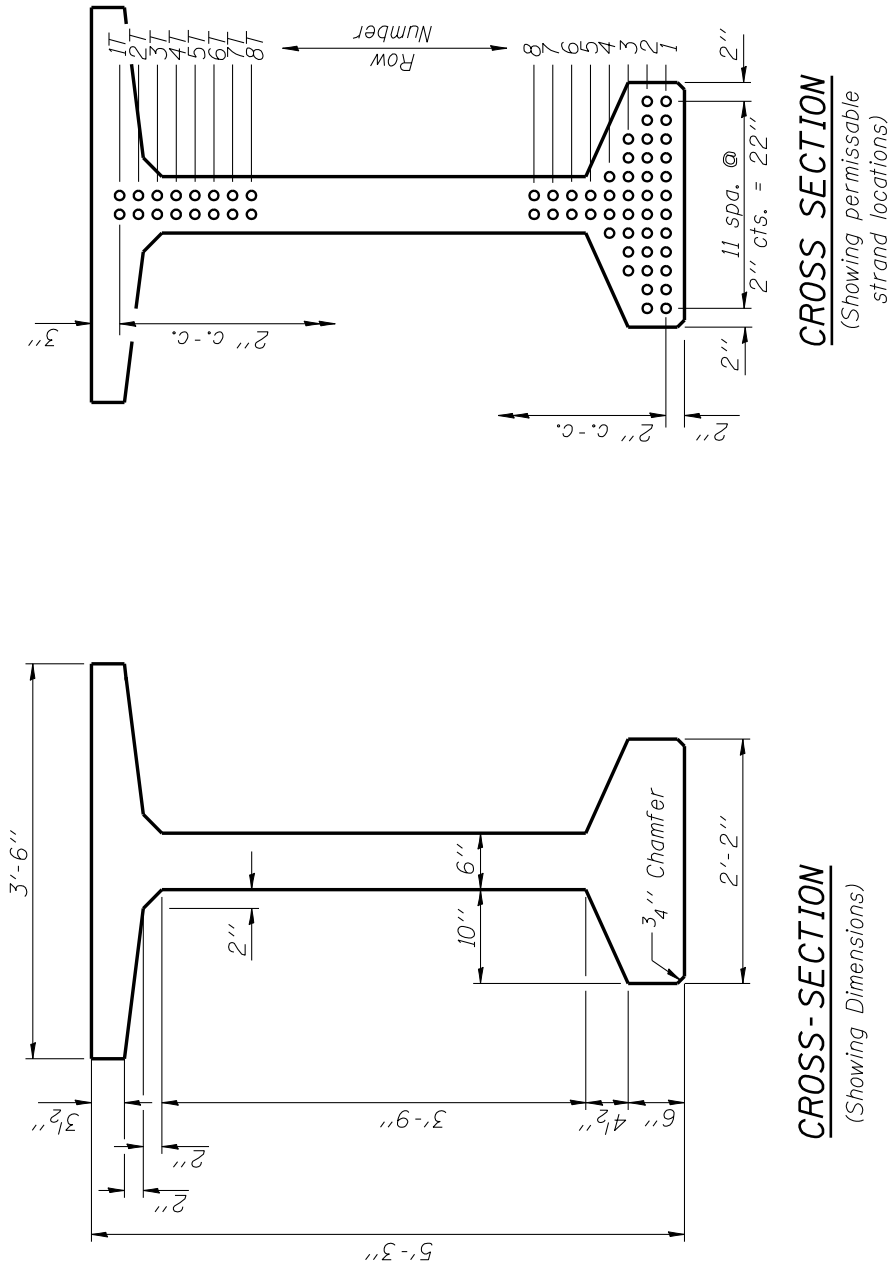

Figure 3.4.4.2-5

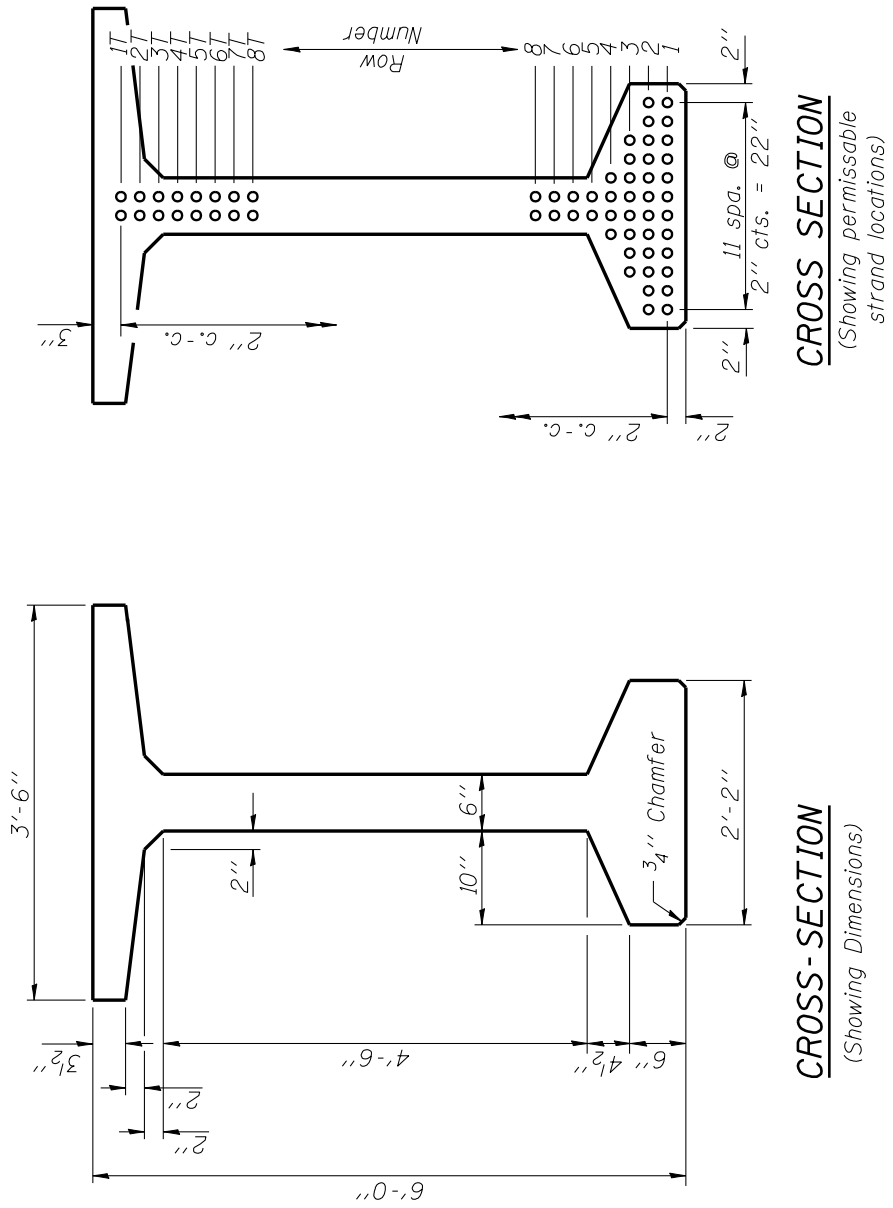

Figure 3.4.4.2-6

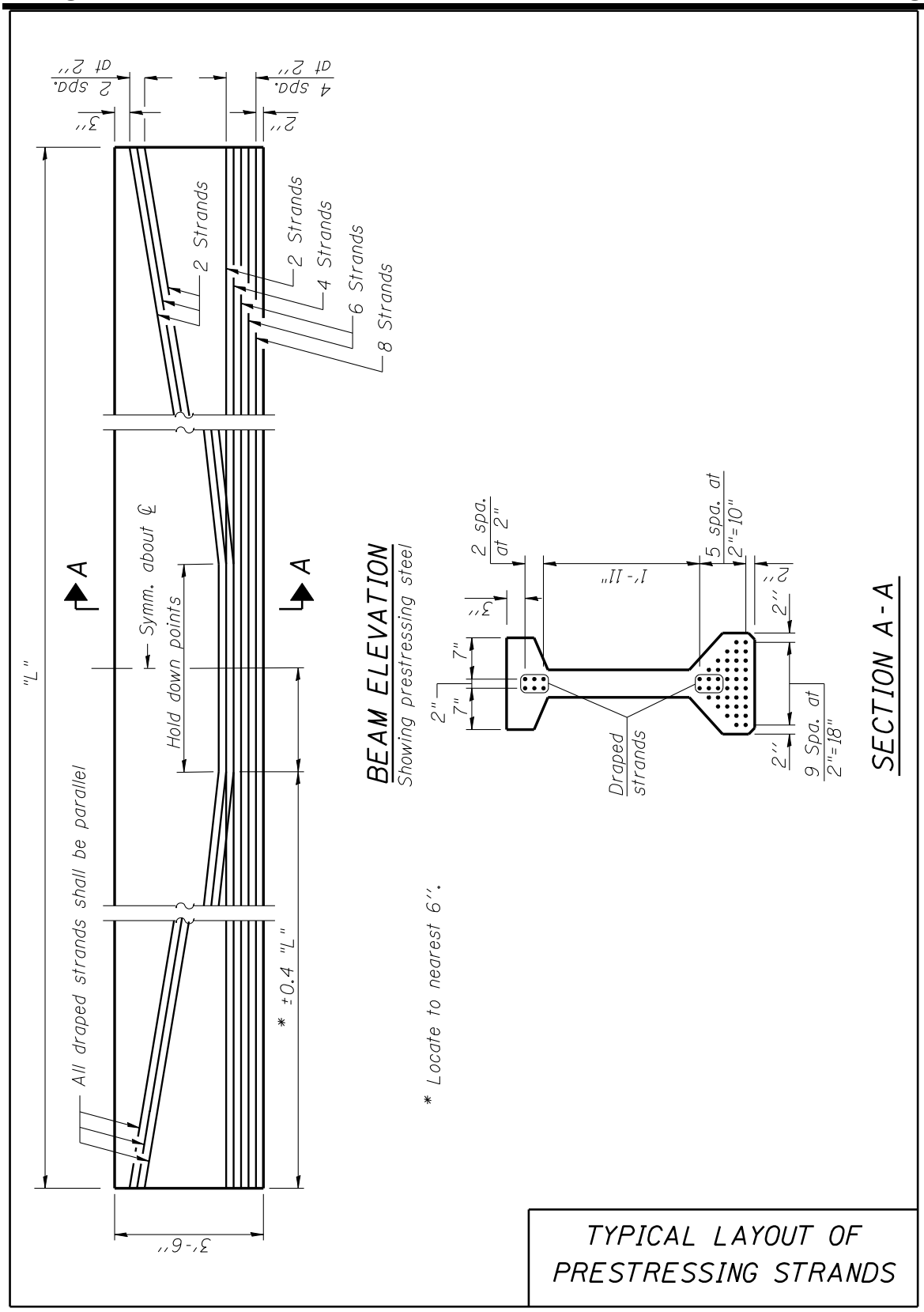

Figure 3.4.4.2-7

3.4.4.3 Concrete Fillets over Prestressed Beams

The minimum fillet over any point on the prestressed beam shall be ½ inch. See also Figure 3.2.4-12. In locations where the fillet exceeds 2 ½ inches, additional reinforcement of #4 bars at 12 in. centers shall be detailed according to Figure 3.4.4.3-1.

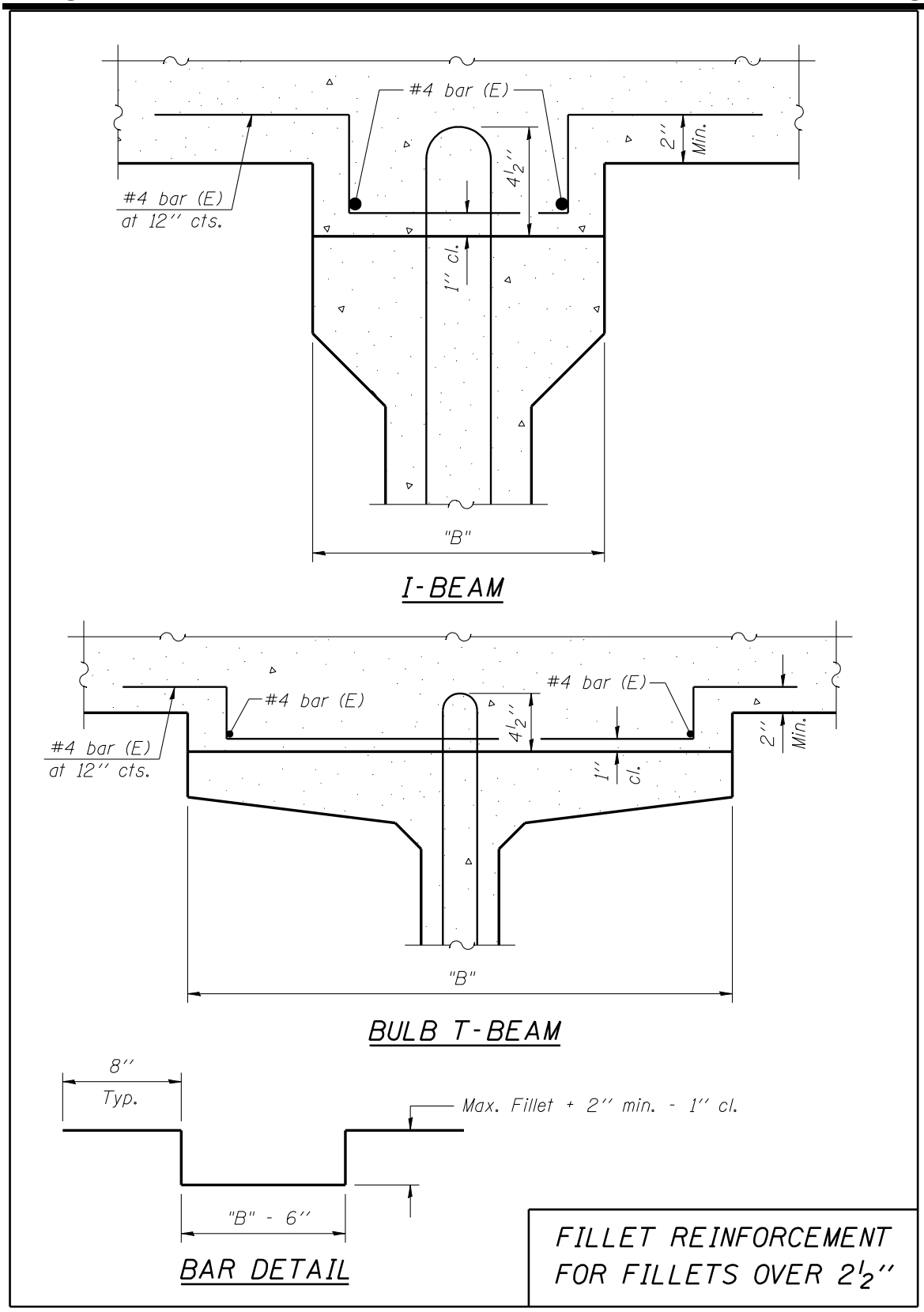

Figure 3.4.4.3-1

3.4.5 Design for Shear

There are significant differences between the LRFD code and the LFD code when designing transverse (shear) reinforcement for ultimate strength away from the ends of prestressed beams. At end regions of these beams, there are special requirements and details for splitting steel which are discussed in Section 3.4.8. Section 3.4.5.1 presents a brief discussion of transverse reinforcement design for ultimate strength using the LRFD code. Standard transverse reinforcement patterns for LRFD PPC beams have also been developed by the Department and may be used for most typical bridges in lieu of design calculations. These patterns are presented in Section 3.4.5.2.

Transverse reinforcement spacing should be shown in three-inch increments (6 in., 9 in., 12 in. etc.).

3.4.5.1 Ultimate Strength Design of Primary Transverse Reinforcement

There are several options available in the LRFD code for shear design of prestressed beams. Either the strut-and-tie model (LRFD Article 5.6.3) or the sectional model (LRFD Article 5.8.3) may be used in the design of transverse reinforcement for PPC beams. For either method, however, LRFD Article 5.8.2 applies. This LRFD article deals with subjects such as minimum reinforcement, maximum spacing of reinforcement, permissible types of transverse reinforcement, etc.

While the standard transverse reinforcement patterns were generated using a conservative simplification of the procedures outlined in Appendix B5 of the LRFD code (see Design Guide 3.4), if detailed shear design calculations are required (i.e. the situation falls outside of the limits covered by the standard transverse reinforcement patterns given in Section 3.4.5.2), then the use of LRFD Article 5.8.3.4.2 is preferred by the Department. The Department generally discourages use of the strut-and-tie model of LRFD Article 5.6.3 for typical designs.

3.4.5.2 Standard Transverse Reinforcement Patterns

Standard LRFD transverse reinforcement patterns are given in Table 3.4.5.2-1.

The standard LRFD transverse reinforcement patterns were developed based upon the criteria listed below. These patterns may be used by designers for all typical PPC I-beams and bulb T-beams within the span length and beam spacing limits shown in Table 3.4.5.2-1.

1. ½ in. diameter low-relaxation 7 wire strands with an ultimate strength, f_{pu}, of 270 ksi.
2. Ultimate concrete compressive strength for beams of 6 ksi.
3. HL-93 live loading using simplified distribution methods outlined in Section 3.3.1.
4. 8 in. thick concrete deck.
5. 1 in. average fillet height for dead load only (not included in section properties).
6. 6 beam lines.
7. Standard F-shape concrete barrier with a weight of 0.45 k/ft.
8. 50 psf future wearing surface.
9. Grade 60 #4 reinforcement only.

LRFD Standard Transverse Reinforcement Table

Limits for Standard Stirrup Patterns

Beam	Span (ft.)	Beam Spacing from (ft.)	to (SS) (ft.)	to (CS) (ft.)
36 in.	30	4 1/2	9	---
	40	4 1/2	9	9
	50	4 1/2	9	9
	60	4 1/2	6	7
	70	4 1/2	---	5

Beam	Span (ft.)	Beam Spacing from (ft.)	to (SS) (ft.)	to (CS) (ft.)
42 in.	50	4 1/2	9	---
	60	4 1/2	9	9
	70	4 1/2	7 1/2	8 1/2
	80	4 1/2	5 1/2	6 1/2
	90	4 1/2	---	5

Beam	Span (ft.)	Beam Spacing from (ft.)	to (SS) (ft.)	to (CS) (ft.)
48 in.	60	4 1/2	9	9
	70	4 1/2	9	9
	80	4 1/2	7 1/2	9
	90	4 1/2	5 1/2	7

Beam	Span (ft.)	Beam Spacing from (ft.)	to (SS) (ft.)	to (CS) (ft.)
54 in.	60	4 1/2	9	---
	70	4 1/2	9	9
	80	4 1/2	9	9
	90	4 1/2	7	8 1/2
	100	4 1/2	5	6 1/2
	110	4 1/2	--	5

Beam	Span (ft.)	Beam Spacing from (ft.)	to (SS) (ft.)	to (CS) (ft.)
63 in.	70	4 1/2	9	---
	80	4 1/2	9	9
	90	4 1/2	9	9
	100	4 1/2	8	9
	110	4 1/2	6 1/2	8
	120	4 1/2	5	6 1/2
	130	4 1/2	--	5

Beam	Span (ft.)	Beam Spacing from (ft.)	to (SS) (ft.)	to (CS) (ft.)
72 in.	80	4 1/2	9	---
	90	4 1/2	9	9
	100	4 1/2	9	9
	110	4 1/2	8	9
	120	4 1/2	7	8 1/2
	130	4 1/2	5 1/2	6 1/2
	140	4 1/2	--	5

Standard Stirrup Patterns

Beam	Location from (10th Pt.)	to (10th Pt.)	Bar Size (#)	Spacing (in.)
36 in.	0	0.3	4	6
	0.3	0.7	4	9
	0.7	1	4	6

Beam	Location from (10th Pt.)	to (10th Pt.)	Bar Size (#)	Spacing (in.)
42 in.	0	0.3	4	6
	0.3	0.7	4	9
	0.7	1	4	6

Beam	Location from (10th Pt.)	to (10th Pt.)	Bar Size (#)	Spacing (in.)
48 in.	0	0.3	4	6
	0.3	0.7	4	12
	0.7	1	4	6

Beam	Location from (10th Pt.)	to (10th Pt.)	Bar Size (#)	Spacing (in.)
54 in.	0	0.3	4	6
	0.3	0.7	4	12
	0.7	1	4	6

Beam	Location from (10th Pt.)	to (10th Pt.)	Bar Size (#)	Spacing (in.)
63 in.	0	0.3	4	6
	0.3	0.7	4	9
	0.7	1	4	6

Beam	Location from (10th Pt.)	to (10th Pt.)	Bar Size (#)	Spacing (in.)
72 in.	0	0.3	4	6
	0.3	0.7	4	9
	0.7	1	4	6

Notes:
1. SS = Simple Spans. CS = Continuous Spans.
2. Patterns outside upper or lower span or beam spacing ranges for simple and continuous beams shall be calculated.

Table 3.4.5.2-1

When detailed transverse reinforcement design calculations are required, specified reinforcement spacings shall be limited to increments of 3 in. (e.g. 6, 9 and 12 in.) for constructability and economy. In addition, designers shall not specify transverse reinforcement spacings greater than those provided in Table 3.4.5.2-1. Small anomalies may occasionally occur between detailed transverse reinforcement design calculations using the simplifications outlined in Design Guide 3.4 and the spacings presented in Table 3.4.5.2-1. If a calculated spacing is less than 6 in., additional G_2 bars may be added to satisfy the transverse reinforcement requirements in such regions (see PPC I-beam and bulb T-beam Base Sheets).

3.4.6 Camber and Deflections

Camber is the result of the difference between the upward deflection caused by prestressing forces and the downward deflection due to the weight of the beam and the slab. Camber shall be considered when determining seat elevations. The top of the beam shall be set to provide a minimum positive fillet as defined in Section 3.4.4.3.

More detailed procedures, guidance and example calculations for computing camber and deflection in PPC I-beams and bulb T-beams are provided in Design Guide 3.4.

3.4.7 Lifting Loops

The Department has developed standard details and designs for lifting loops which are fabrication friendly and satisfy guidelines in the PCI Design Handbook. Figure 3.4.7-1 presents the developed details and designs which are applicable to all PPC I-beams and bulb T-beams designed according to the LRFD Specifications. The selection of a particular design in Figure 3.4.7-1 is dependent upon the beam size (36 in. through 72 in.) and length.

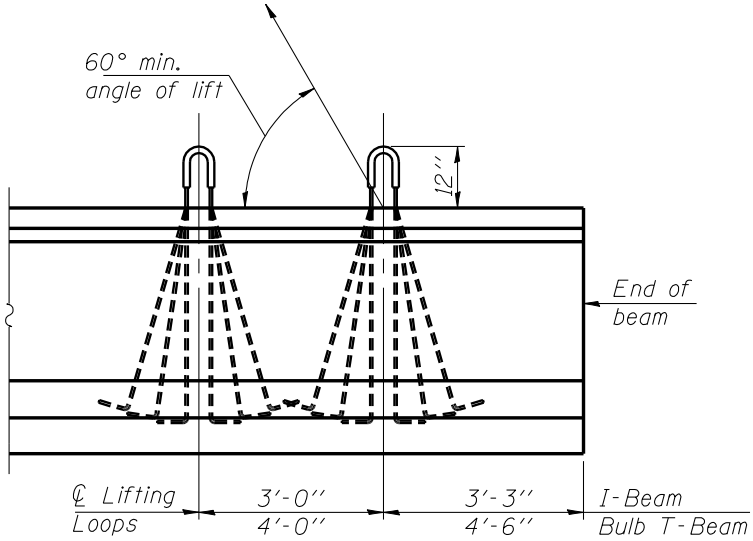

ELEVATION

See table for the number of loops and strands per loop required. All lifting loop prestressing strands shall be 1/2'' ϕ-270 ksi. Detail on Base Sheet accordingly.

DESIGN CRITERIA

PPC Beam	Wt. (Lbs./ft.)	D
36'' I-Beam	375	2'-6''
42'' I-Beam	485	3'-0''
48'' I-Beam	595	3'-6''
54'' I-Beam	624	4'-0''
63'' Bulb T-Beam	743	4'-9''
72'' Bulb T-Beam	799	5'-6''

LIFTING LOOP REQUIREMENTS

No. of loops each end of beam	No. of strands per loop (N)	Maximum Gross wt. of beam (lbs.)
1	3	41,500
1	4	55,400
2	3	83,100
2	4	110,800
2	5	138,500

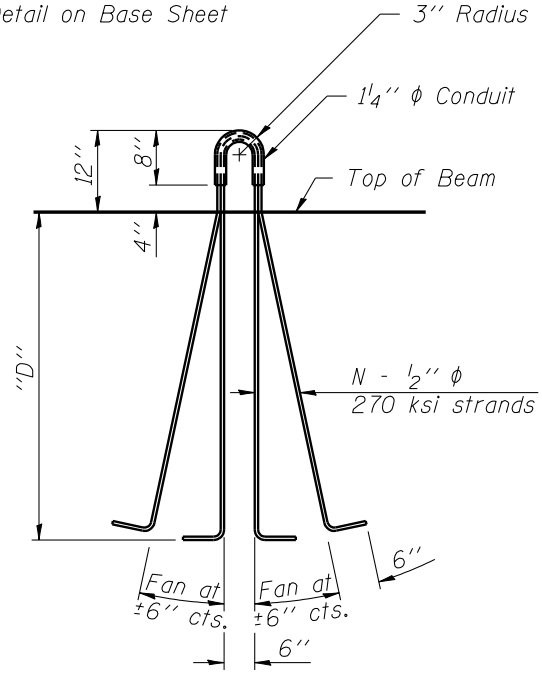

TYPICAL LIFTING LOOP

LIFTING LOOP

Figure 3.4.7-1

3.4.8 Splitting Steel

The Department has developed standard splitting steel details for the pretensioned anchorage zones at the ends of PPC I-beams and bulb T-beams. These details shall be specified for all beams. The required splitting steel details were developed and refined by the BBS through testing and evaluation at fabrication plants and observed performance of prototypes in the field. The strength of the developed details exceeds the requirements for pretensioned anchorage zones outlined in Article 5.10.10 of the LRFD code.

The splitting steel details consist of a system of threaded rods and plates at the beam ends which are immediately followed by a standard spacing of G_1 and G_2 bars. The top plate has been standardized and is detailed on the base sheets for the various beams used by the Department. The bottom plate is sized based on the presence of a bearing as illustrated in Figure 3.4.8-1. If there is not a bearing (i.e. the beams sits on a ½ in. grout bed or fabric bearing pads) then the minimum plate dimensions shown in the figure shall be used. These details have demonstrated better performance at reducing splitting force cracks in the anchorage zone caused by strand detensioning than those which had been traditionally specified by the Department.

The Departmental base sheets for PPC I-beams and bulb T-beams reflect the standard splitting steel details required by the Department. One primary base sheet for each beam span should be provided along with one companion details base sheet for each beam depth used.

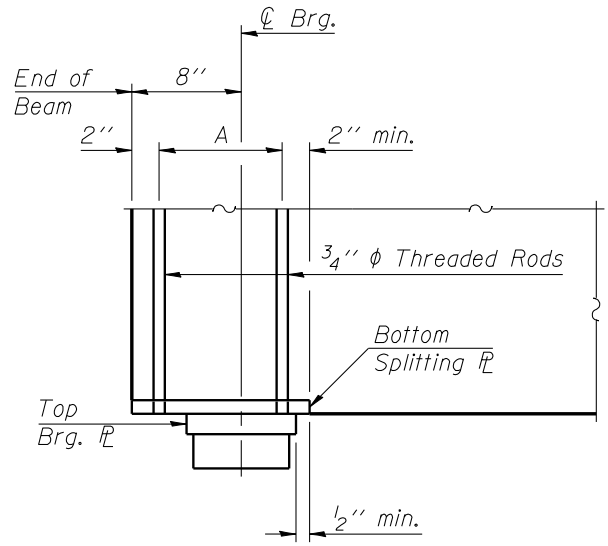

A = 3 spaces @ 3'' for PPC I-beams
A = 4 spaces @ 3 1/4'' for PPC Bulb T-beams
w = 8'' + 1/2(top brg. plate width) + 1/2''
(w = 13'' min. I-beams)
(w = 17'' min. Bulb T-beams)

ELEVATION
(Studs and pintles not shown for clarity)

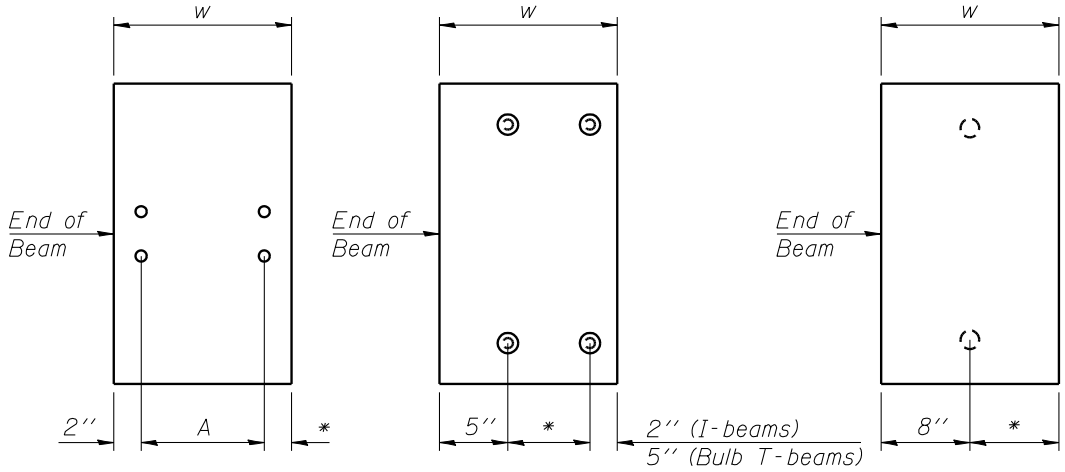

BOTTOM PL
(Showing threaded rods)

BOTTOM PL
(Showing studs)

BOTTOM PL
(Showing pintles used for bearings only)

*Varies based on total width of plate (w).

Note:
Calculate the bottom splitting plate width (w) using the equation above.

BOTTOM PL DETAILS OF THE SPLITTING STEEL ASSEMBLY

Figure 3.4.8-1

3.4.9 Permanent Bracing

Permanent bracing shall be provided for all PPC beams and shall be detailed in the plans. This bracing is primarily provided to help ensure beam stability during erection and deck construction. Figure 3.4.9-1 illustrates permanent bracing details for 36 and 42 inch PPC I-Beams, Figure 3.4.9-2 illustrates permanent bracing details for 48 and 54 inch PPC I-Beams and Figure 3.4.9-3 illustrates permanent bracing details for Bulb T-Beams. Spans up to 90 feet shall be braced at 0.33L and 0.67L where L is the length of the beam. Spans over 90 feet in length shall be braced at 0.25L, 0.5L, and 0.75L. The fabricator shall be responsible for adjusting the location of holes and inserts to miss strands within permissible tolerances. Structures with skews less than or equal to 20° shall be braced along the skew by utilizing bent angles or plates. Structures with skews greater than 20° shall be braced at right angles to the beam, with the formed holes in adjacent beams offset by an amount equal to the beam spacing multiplied by the tangent of the skew. All holes in webs shall be at right angles to the web. Bracing is not required between beams across the stage construction line. Permanent bracing shall not be paid for separately but shall be included in the cost of furnishing and erecting the prestressed beams.

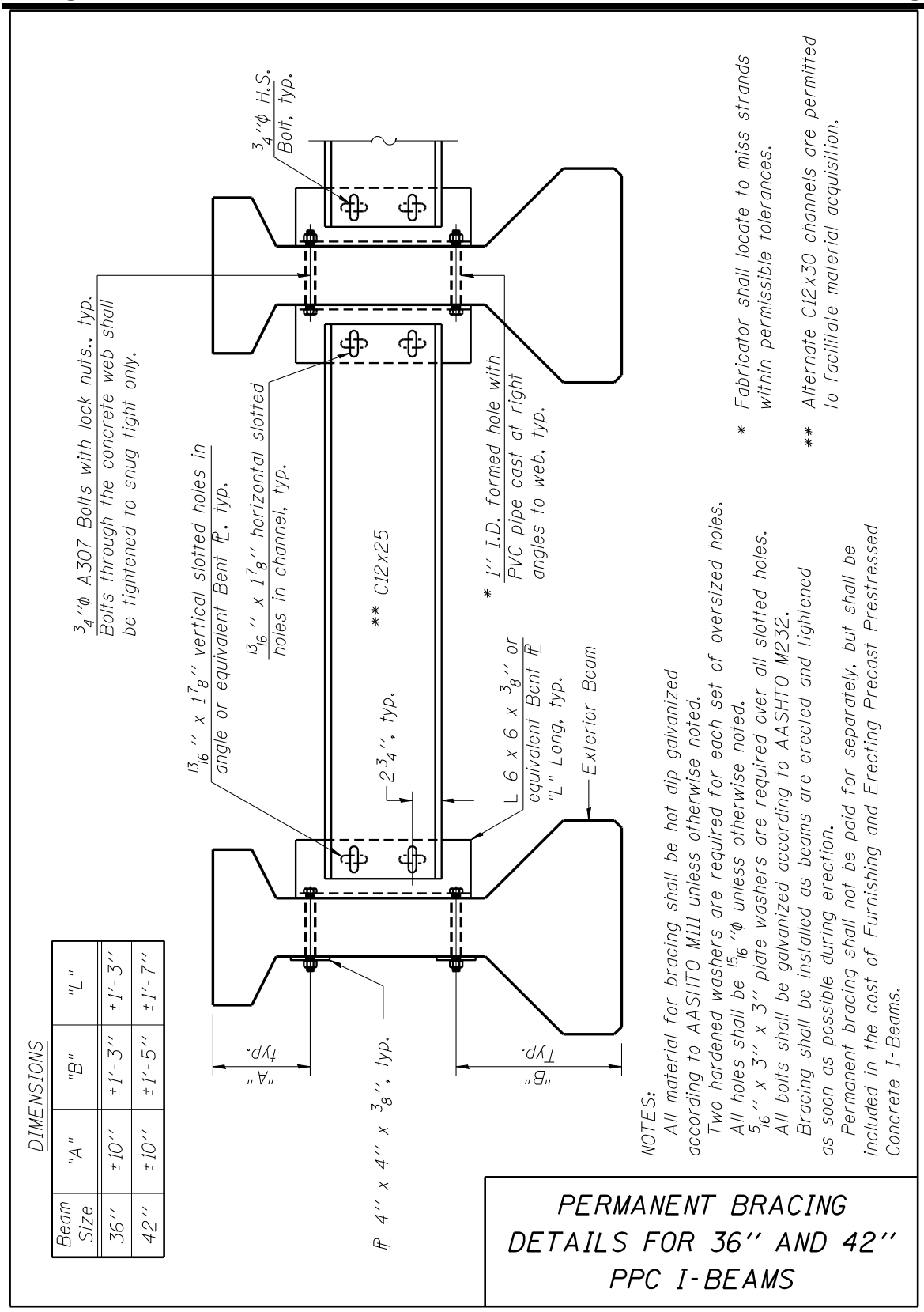

DIMENSIONS

Beam Size	"A"	"B"	"L"
36"	± 10"	± 1'-3"	± 1'-3"
42"	± 10"	± 1'-5"	± 1'-7"

Figure 3.4.9-1

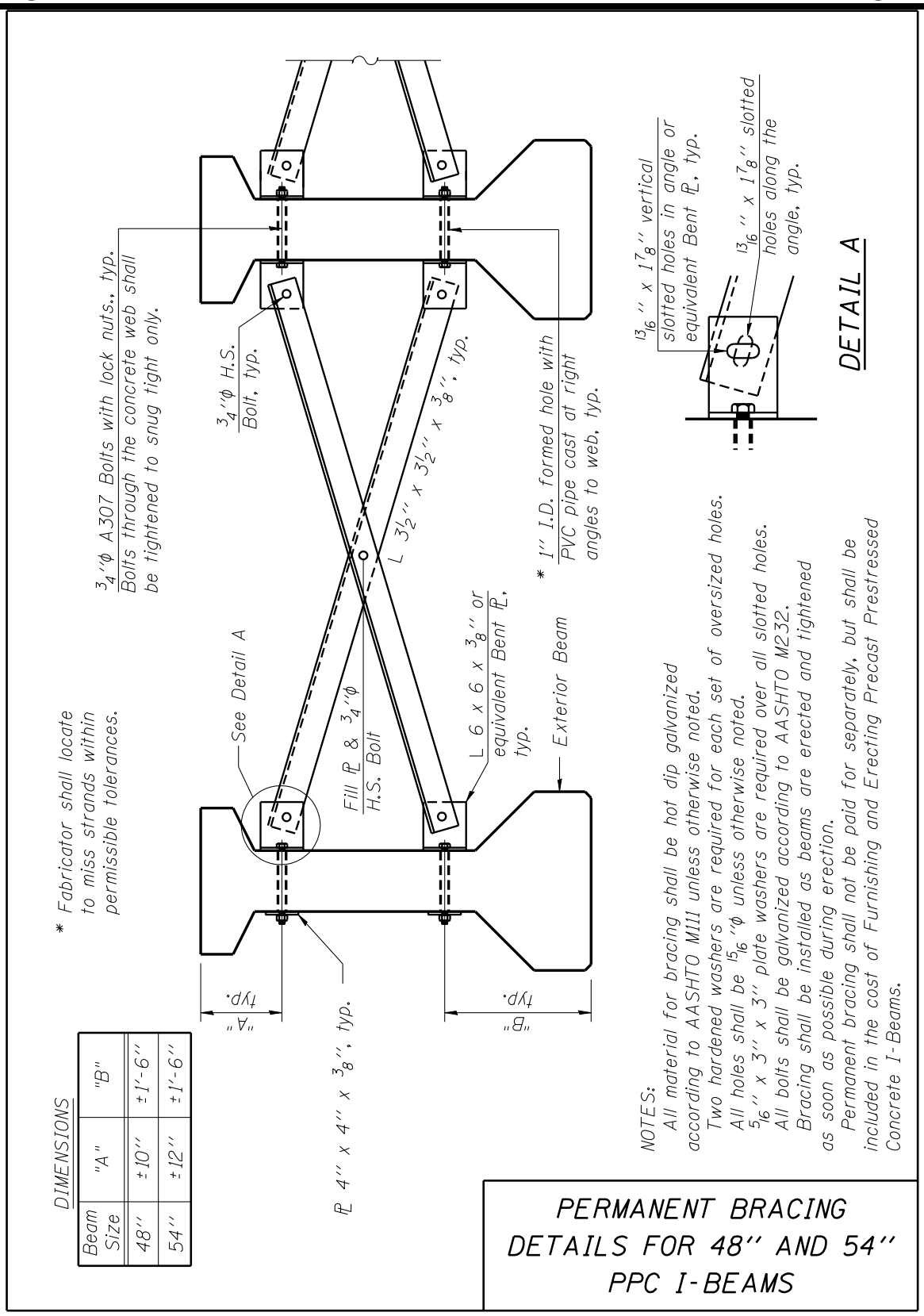
3/4''φ A307 Bolts with lock nuts., typ.
Bolts through the concrete web shall be tightened to snug tight only.
3/4''φ H.S. Bolt, typ.
L 3 1/2'' x 3 1/2'' x 3/8'', typ.
* 1'' I.D. formed hole with PVC pipe cast at right angles to web, typ.
13/16'' x 1 7/8'' vertical slotted holes in angle or equivalent Bent PL, typ.
13/16'' x 1 7/8'' slotted holes along the angle, typ.
DETAIL A
* Fabricator shall locate to miss strands within permissible tolerances.
See Detail A
Fill PL & 3/4''φ H.S. Bolt
L 6 x 6 x 3/8'' or equivalent Bent PL, typ.
Exterior Beam
PL 4'' x 4'' x 3/8'', typ.
"A" typ.
"B" typ.
DIMENSIONS
Beam Size | "A" | "B"
48'' | ±10'' | ±1'-6''
54'' | ±12'' | ±1'-6''
NOTES:
All material for bracing shall be hot dip galvanized according to AASHTO M111 unless otherwise noted.
Two hardened washers are required for each set of oversized holes.
All holes shall be 15/16''φ unless otherwise noted.
5/16'' x 3'' x 3'' plate washers are required over all slotted holes.
All bolts shall be galvanized according to AASHTO M232.
Bracing shall be installed as beams are erected and tightened as soon as possible during erection.
Permanent bracing shall not be paid for separately, but shall be included in the cost of Furnishing and Erecting Precast Prestressed Concrete I-Beams.
PERMANENT BRACING DETAILS FOR 48'' AND 54'' PPC I-BEAMS

Figure 3.4.9-2

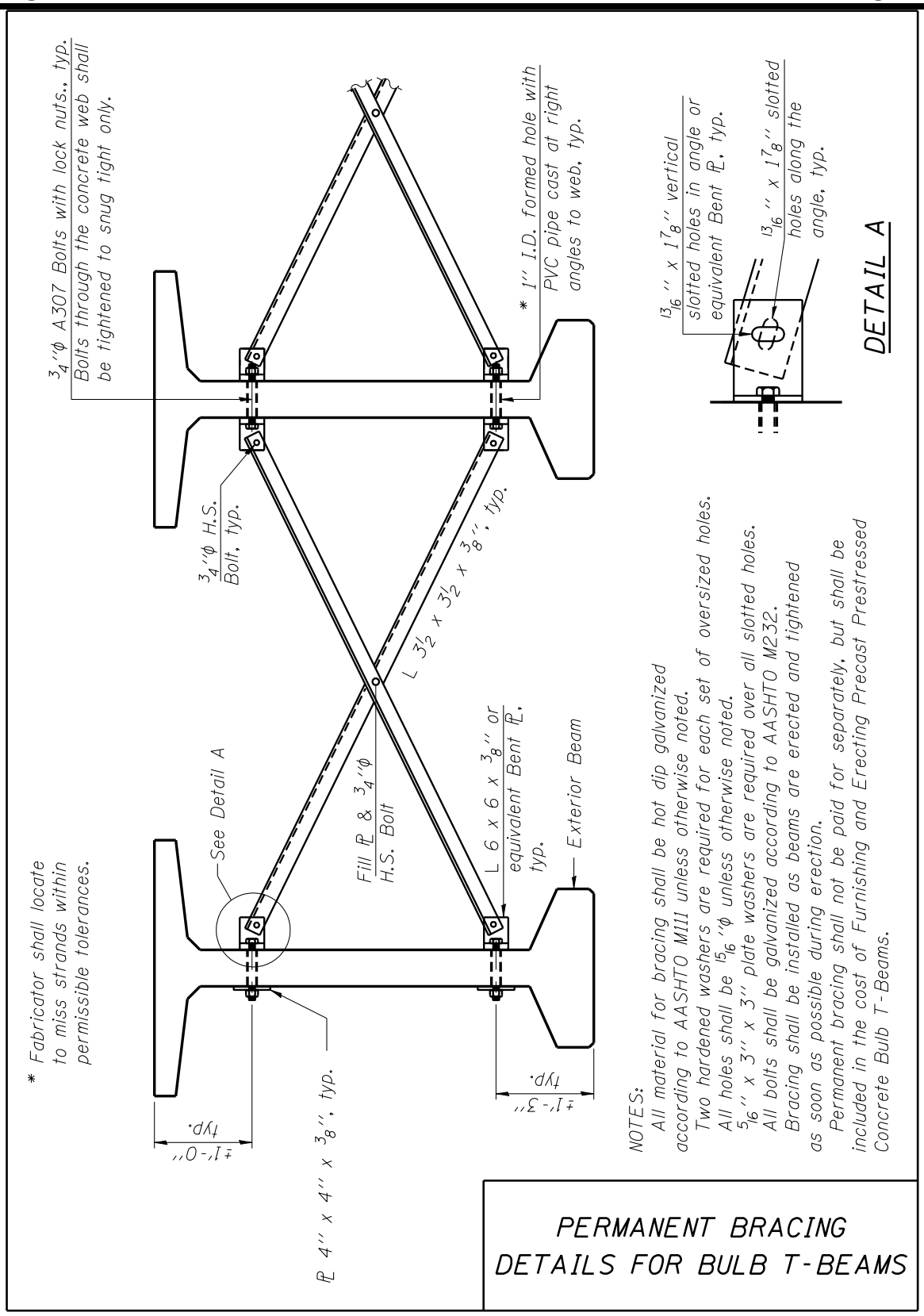
3/4''φ A307 Bolts with lock nuts., typ.
Bolts through the concrete web shall be tightened to snug tight only.
* 1'' I.D. formed hole with PVC pipe cast at right angles to web, typ.
13/16'' x 1 7/8'' vertical slotted holes in angle or equivalent Bent PL, typ.
13/16'' x 1 7/8'' slotted holes along the angle, typ.
DETAIL A
3/4''φ H.S. Bolt, typ.
L 3 1/2 x 3 1/2 x 3/8'', typ.
See Detail A
Fill PL & 3/4''φ H.S. Bolt
L 6 x 6 x 3/8'' or equivalent Bent PL, typ.
Exterior Beam
* Fabricator shall locate to miss strands within permissible tolerances.
±1'-0'' typ.
PL 4'' x 4'' x 3/8'', typ.
±1'-3'' typ.
NOTES:
All material for bracing shall be hot dip galvanized according to AASHTO M111 unless otherwise noted.
Two hardened washers are required for each set of oversized holes.
All holes shall be 15/16''φ unless otherwise noted.
5/16'' x 3'' x 3'' plate washers are required over all slotted holes.
All bolts shall be galvanized according to AASHTO M232.
Bracing shall be installed as beams are erected and tightened as soon as possible during erection.
Permanent bracing shall not be paid for separately, but shall be included in the cost of Furnishing and Erecting Precast Prestressed Concrete Bulb T-Beams.
PERMANENT BRACING DETAILS FOR BULB T-BEAMS

Figure 3.4.9-3

3.4.10 Continuity Diaphragms over Piers

The details for continuity diaphragms are illustrated in Figures 3.4.10-1 thru 3.4.10-6. Most of these details are covered on the appropriate base sheets for the beam and deck configuration specified. The diaphragm width shall be as specified in Figure 3.4.10-5 and depends on the skew and type of prestressed beam used. The positive moment restraint G_6 bar assemblies shall only be provided at piers and are detailed on the beam base sheets.

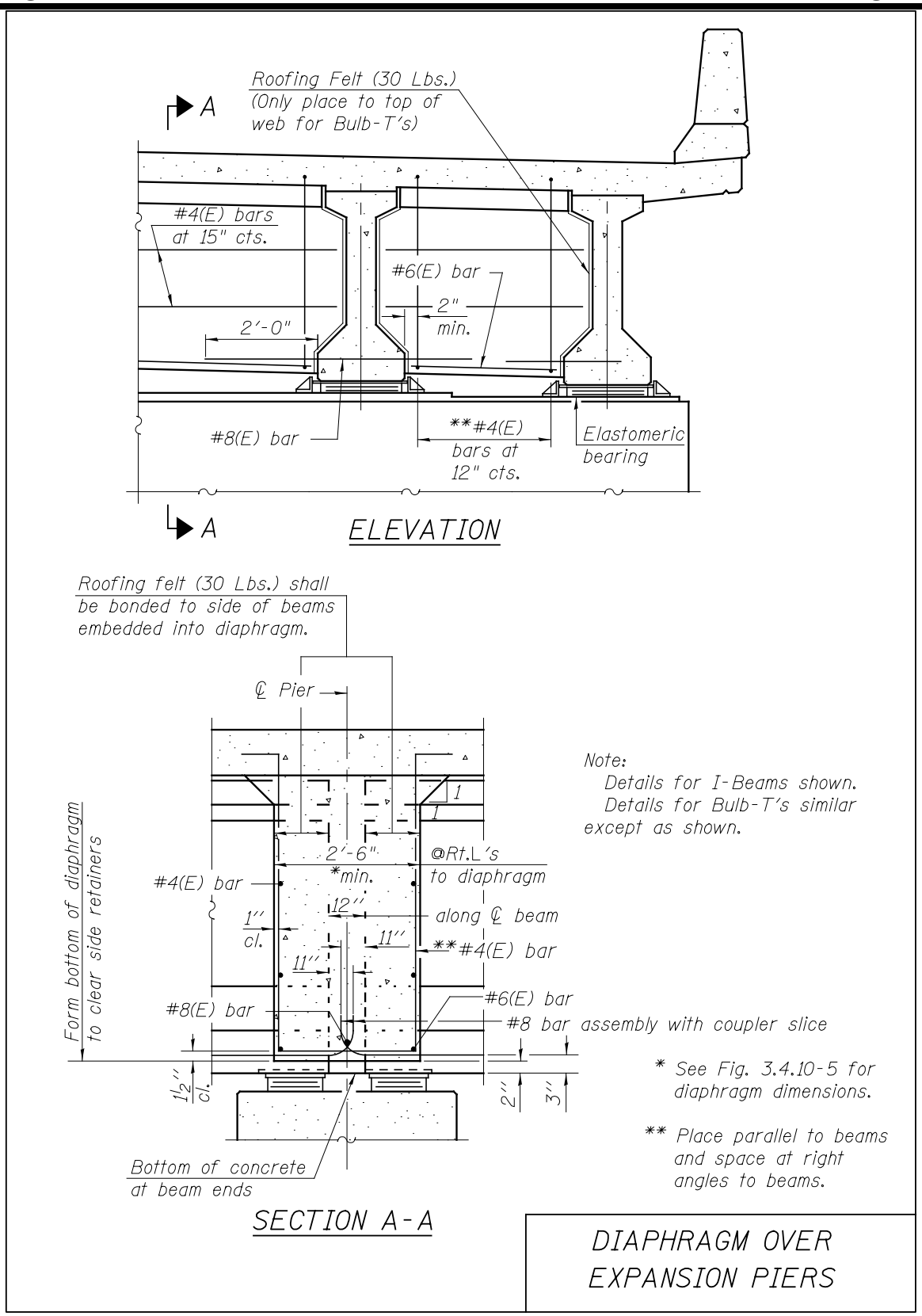

Figure 3.4.10-1

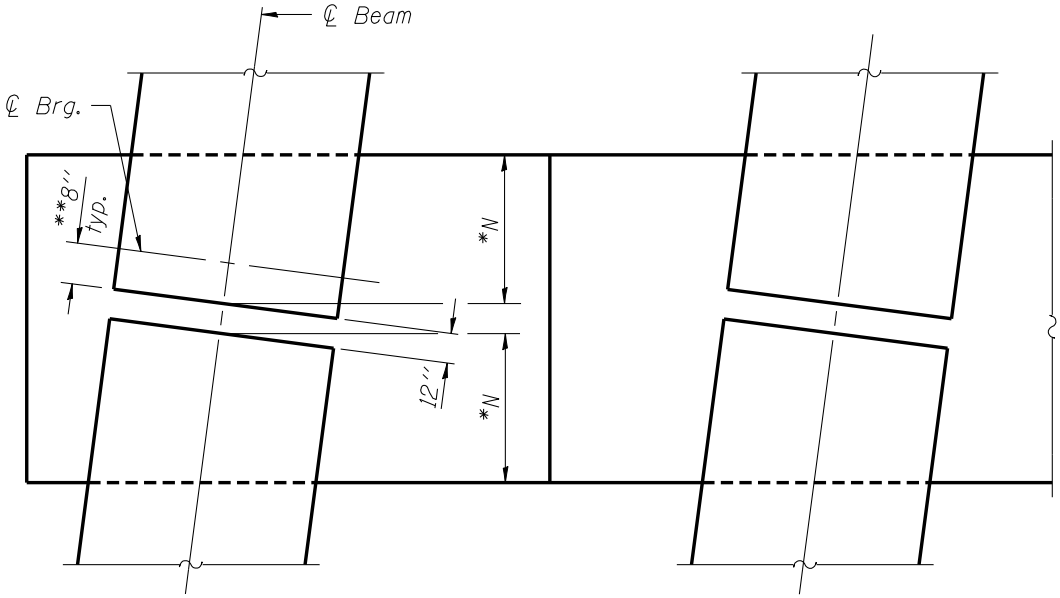

PLAN

(Diaphragm not shown for clarity)

* Adequate seat length ''N'' shall be provided for each beam (for all seismic performance categories) and shall be determined according to Section 3.15. The shear reinforcement extending from the beams into the slab, the longitudinal slab reinforcement and the diaphragm details shown in this manual together shall be assumed to provide continuity over the supports; however, adequate seat length ''N'' shall be provided for each beam to assure neither beam will move beyond the support resulting in a shear failure.

** The 8'' dimension is intended for use with bearings given in Section 3.7. Use 6'' when using fabric bearing pads. When bearings outside the limits of the Bridge Manual are used, this dimension may need to be increased.

EXPANSION PIER DETAILS

Figure 3.4.10-2

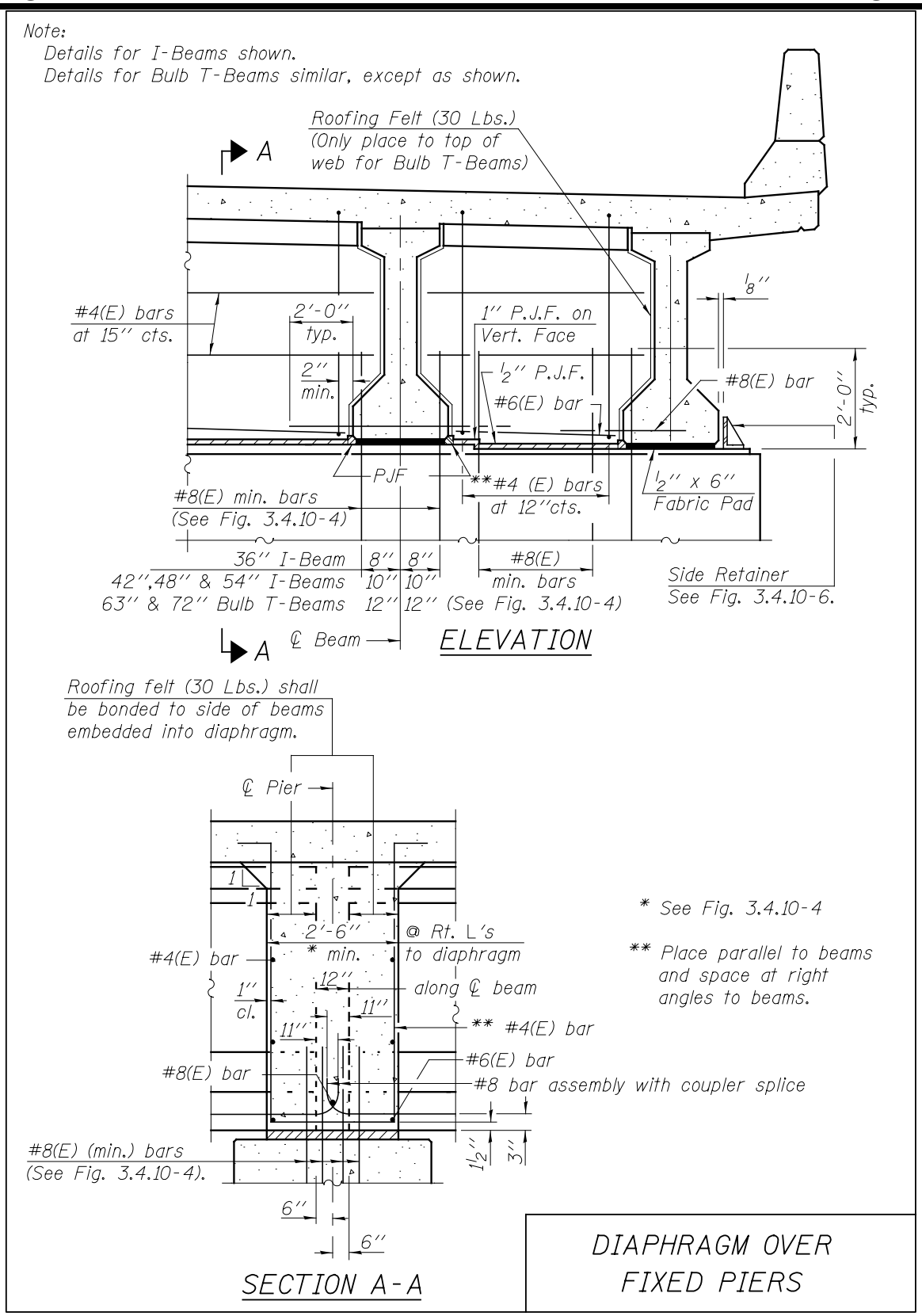

Figure 3.4.10-3

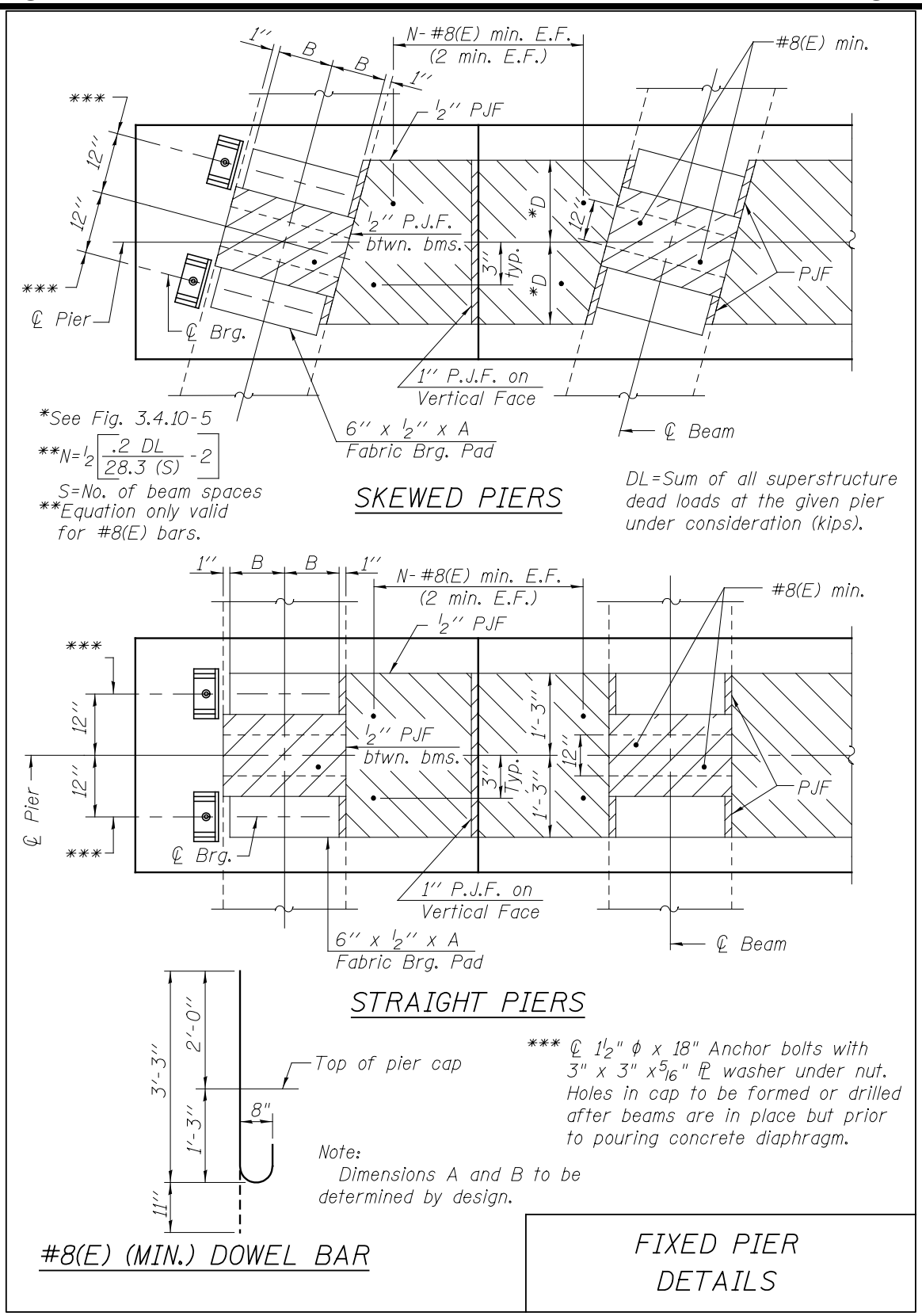

Figure 3.4.10-4

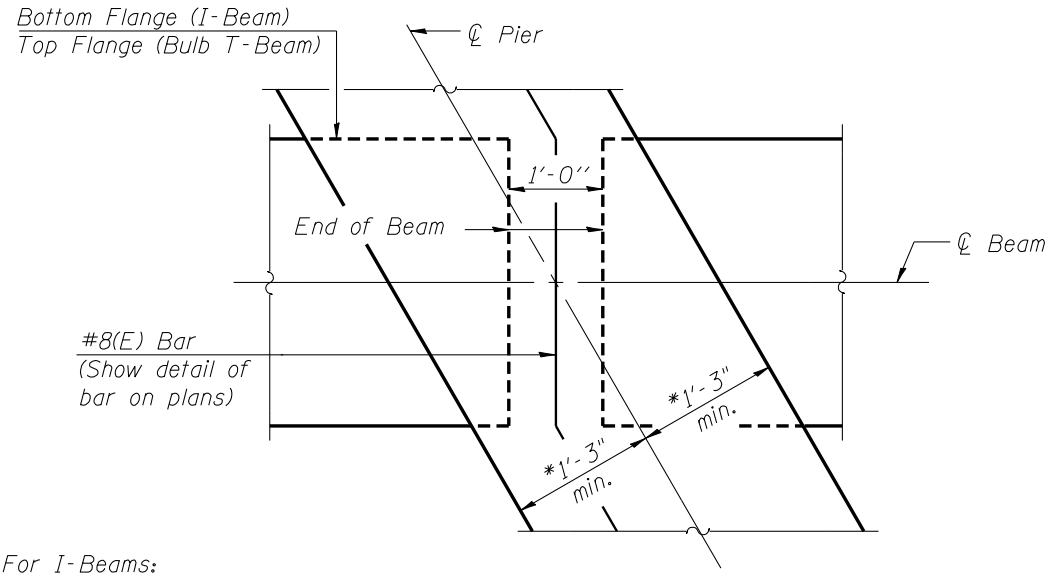

* For I-Beams:
Use 1'-3" up to 45° skew
Use 1'-4½" over 45° skew
For Bulb T-Beams:
Use 1'-3" up to 20° skew
Use 1'-9" for skews between 20° and 40°
Use 2'-3" for skews over 40°

SKEWED DIAPHRAGM

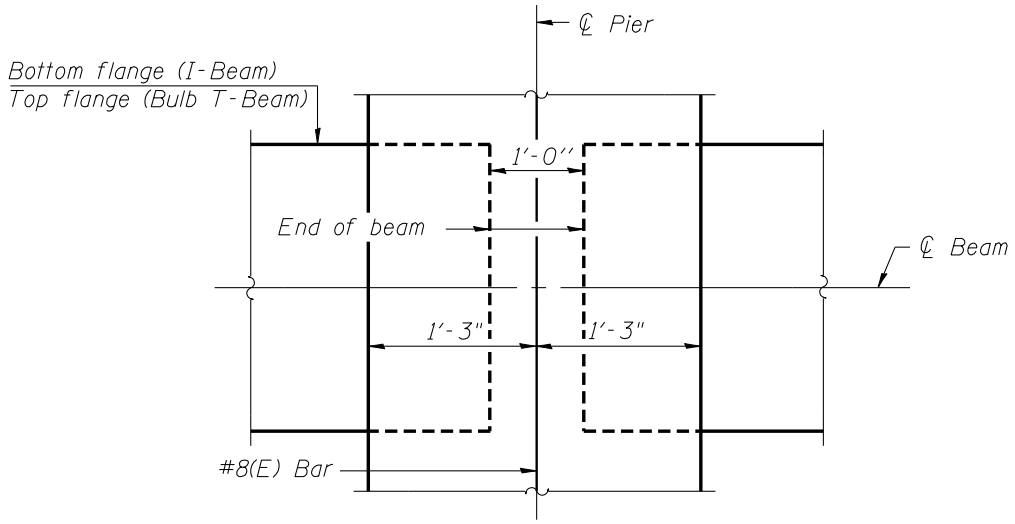

RT. ANGLE DIAPHRAGM

DIAPHRAGM DIMENSIONS
AT PIERS

Figure 3.4.10-5

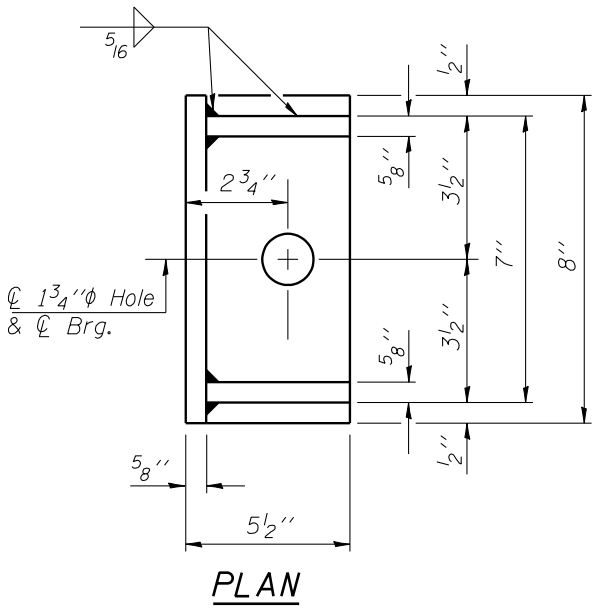

PLAN

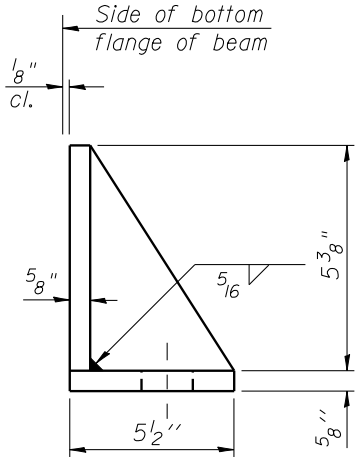

ELEVATION

Notes:

Equivalent rolled angle with stiffeners will be allowed in lieu of welded plates.

The side retainers shall be galvanized after shop fabrication according to AASHTO M 111 and ASTM 385.

SIDE RETAINER
AT FIXED PIERS

Figure 3.4.10-6

3.5 PPC Deck Beams

This section covers the Department's policies and details related to precast prestressed concrete deck beam designs per the AASHTO LRFD Specifications. All deck beams on the State and Local system as well as all replacement beams shall be designed according to LRFD.
General limitations and selection charts based on standard loading cases and design criteria may be found in Section 2.3.6.1.2. These charts help choose an appropriate beam size and strand pattern for a given span length; however, they shall be verified through computations as described in this section and Design Guide 3.5.

Deck beams shall be fixed at all supports for structures with lengths of 300 feet or less. Structures lengths greater than 300 feet shall typically have an expansion joint; however, all fixed supports may be utilized on structures with lengths greater than 300 feet provided all thermal forces are accounted for in the design.

All deck beam structures on State routes shall have an initial 5 inch minimum Concrete Wearing Surface (CWS). The 5 inch minimum CWS is not considered in the resisting moment section modulus or in the live load distribution scheme.

3.5.1 Design Guide

Design Guide 3.5 provides a detailed explanation of the Department's policies for various design components and is followed by a worked design example. The design components covered are:

- Dead Loads
- Live Loads and live load distribution factors
- Transverse tie locations
- Losses / Gains
- Section Properties
- Temporary stresses
- Service stresses
- Fatigue stresses
- Flexural Resistance
- Minimum Reinforcement
- Camber and Deflection

3.5.2 Stress Limits

The provisions for stress limits in Section 3.4.3 are also applicable for Precast Prestressed Deck Beams.

3.5.3 Strand Pattern Tables

Tables 3.5.3-1 through 3.5.3-6 detail standard strand patterns for use with standard IDOT deck beam shapes. The strand alignments are set up in a 2 inch by 2 inch grid similar to I-Beams and Bulb T-Beams rather than a staggered arrangement. This allows for better strand placement versatility and permits a common stressing block and template for all beam sections. The strand patterns are also intentionally configured with the number of strands in the bottom row equal to or less than the second row to provide for better redundancy against corrosion. Strand patterns with the least number of strands for a given section are governed by minimum reinforcement requirements of AASHTO (1.2 M_{cr}). All strand patterns were arranged such that the temporary stresses are satisfied. The upper most strand pattern for any given section is a function of these stresses which are controlled by the concrete strength.

The strand pattern designation format for deck beams is the same format used for I-Beams and Bulb T-Beams in Figure 3.4.4.1-1. Since deck beams are simple spans with straight strand patterns and standard strength concrete, the designations for deck beams is simply the number of strands followed by SS.

LRFD 11x48 Deck Beam Strand Patterns (½ in. ϕ strands)

Strand Pattern	Location of Strands Up from Bottom of Beam											E (in.)
	1 ¾ in.	3 ¾ in.										
8SS	4	4										2.73
10SS	4	6										2.53
12SS	6	6										2.73
14SS	6	8										2.59
16SS	8	8										2.73

LRFD 11x52 Deck Beam Strand Patterns (½ in. ϕ strands)

Strand Pattern	Location of Strands Up from Bottom of Beam											E (in.)
	1 ¾ in.	3 ¾ in.										
8SS	4	4										2.73
10SS	4	6										2.53
12SS	6	6										2.73
14SS	6	8										2.59
16SS	8	8										2.73
18SS	8	10										2.62

Table 3.5.3-1

LRFD 17x36 Deck Beam Strand Patterns (½ in. ϕ strands)

Strand Pattern	Location of Strands Up from Bottom of Beam											E (in.)
	1 ¾ in.	3 ¾ in.	11 ¾ in.									
10SS	4	4	2									3.86
12SS	4	6	2									3.99
14SS	6	6	2									4.37
16SS	6	8	2									4.41
18SS	8	8	2									4.66

LRFD 17x48 Deck Beam Strand Patterns (½ in. ϕ strands)

Strand Pattern	Location of Strands Up from Bottom of Beam											E (in.)
	1 ¾ in.	3 ¾ in.	11 ¾ in.									
12SS	4	6	2									4.01
14SS	6	6	2									4.40
16SS	6	8	2									4.43
18SS	8	8	2									4.68
20SS	8	10	2									4.68
22SS	10	10	2									4.86
24SS	10	12	2									4.85

Table 3.5.3-2

LRFD 21x36 Deck Beam Strand Patterns (½ in. ϕ strands)

Strand Pattern	Location of Strands Up from Bottom of Beam											E (in.)
	1 ¾ in.	3 ¾ in.	5 ¾ in.	7 ¾ in.	15 ¾ in.							
10SS	4	4	2									7.03
12SS	4	4	2	2								6.29
14SS	4	6	2	2								6.34
16SS	6	8			2							5.88
18SS	6	8	2		2							5.74
20SS	8	8	2		2							6.03
22SS	8	10		2	2							5.90

LRFD 21x48 Deck Beam Strand Patterns (½ in. ϕ strands)

Strand Pattern	Location of Strands Up from Bottom of Beam											E (in.)
	1 ¾ in.	3 ¾ in.	5 ¾ in.	7 ¾ in.	15 ¾ in.							
14SS	6	6	2									7.23
16SS	6	6	2	2								6.65
18SS	8	8			2							6.21
20SS	8	10			2							6.25
22SS	10	10			2							6.47
24SS	10	10	2		2							6.32
26SS	10	10	2	2	2							6.04
28SS	10	12	2	2	2							6.08

Table 3.5.3-3

LRFD 27x36 Deck Beam Strand Patterns (½ in. ϕ strands)

Strand Pattern	Location of Strands Up from Bottom of Beam											E (in.)
	1 ¾ in.	3 ¾ in.	5 ¾ in.	7 ¾ in.	21 ¾ in.							
12SS	4	6	2									9.88
14SS	4	6	2	2								9.26
16SS	6	8			2							8.05
18SS	8	8			2							8.43
20SS	8	8	2		2							8.35
22SS	8	10	2		2							8.45
24SS	8	10	2	2	2							8.21

LRFD 27x48 Deck Beam Strand Patterns (½ in. ϕ strands)

Strand Pattern	Location of Strands Up from Bottom of Beam											E (in.)
	1 ¾ in.	3 ¾ in.	5 ¾ in.	7 ¾ in.	21 ¾ in.							
16SS	6	8	2									10.08
18SS	6	8	2	2								9.58
20SS	8	10			2							8.58
22SS	10	10			2							8.86
24SS	10	12			2							8.92
26SS	12	12			2							9.12
28SS	12	12	2		2							9.01
30SS	12	12	2	2	2							8.78

Table 3.5.3-4

LRFD 33x36 Deck Beam Strand Patterns (½ in. ϕ strands)

Strand Pattern	Location of Strands Up from Bottom of Beam											E (in.)
	1 ¾ in.	3 ¾ in.	5 ¾ in.	7 ¾ in.	9 ¾ in.	11 ¾ in.	13 ¾ in.	25 ¾ in.	27 ¾ in.			
14SS	4	6	2	2								12.18
16SS	4	6	2	2	2							11.47
18SS	6	6		2	2	2						11.13
20SS	8	10							2			10.87
22SS	8	10	2						2			10.83
24SS	10	10					2		2			10.47
26SS	10	10	2				2		2			10.47
28SS	10	10	2	2			2		2			10.32

LRFD 33x48 Deck Beam Strand Patterns (½ in. ϕ strands)

Strand Pattern	Location of Strands Up from Bottom of Beam											E (in.)
	1 ¾ in.	3 ¾ in.	5 ¾ in.	7 ¾ in.	9 ¾ in.	11 ¾ in.	13 ¾ in.	25 ¾ in.	27 ¾ in.			
18SS	6	8	2	2								12.52
20SS	6	8	2	2	2							11.92
22SS	8	8		2	2	2						11.61
24SS	8	8	2	2	2	2						11.52
26SS	12	12							2			11.59
28SS	12	12	2						2			11.52
30SS	12	12	2	2					2			11.32
32SS	12	12	2	2	2				2			11.02
34SS	12	14	2	2			2		2			10.87

Table 3.5.3-5

LRFD 42x36 Deck Beam Strand Patterns (½ in. ϕ strands)

Strand Pattern	Location of Strands Up from Bottom of Beam											E (in.)
	1 ¾ in.	3 ¾ in.	5 ¾ in.	7 ¾ in.	9 ¾ in.	11 ¾ in.	13 ¾ in.	15 ¾ in.	17 ¾ in.	33 ¾ in.	35 ¾ in.	
16SS	4	4	2	2	2	2						14.88
18SS	8	8									2	14.21
20SS	8	8	2								2	14.28
22SS	8	8	2	2							2	14.15
24SS	8	8	2	2	2						2	13.88
26SS	8	8	2	2	2	2					2	13.49
28SS	8	10	2	2	2				2		2	13.31
30SS	8	10	2	2	2	2	2				2	13.28
32SS	8	10	2	2	2	2	2	2			2	12.75
34SS	10	10		2	2	2	2	2	2		2	12.41

LRFD 42x48 Deck Beam Strand Patterns (½ in. ϕ strands)

Strand Pattern	Location of Strands Up from Bottom of Beam											E (in.)
	1 ¾ in.	3 ¾ in.	5 ¾ in.	7 ¾ in.	9 ¾ in.	11 ¾ in.	13 ¾ in.	15 ¾ in.	17 ¾ in.	33 ¾ in.	35 ¾ in.	
20SS	8	8	2						2			16.13
22SS	6	8	2	2	2				2			15.12
24SS	10	12									2	15.10
26SS	10	10	2	2							2	14.78
28SS	10	10	2	2	2						2	14.51
30SS	10	12	2	2	2						2	14.67
32SS	10	12	2	2	2	2					2	14.31
34SS	12	12	2	2	2	2					2	14.58
36SS	12	12	2	2	2	2	2				2	14.16
38SS	14	14	2	2	2					2	2	13.78
40SS	14	14	2	2	2	2				2	2	13.53

Table 3.5.3-6

3.5.4 Design Properties and Standard Beam Cross Sections

Table 3.5.4-1 shows pertinent beam section properties necessary for the design of each beam followed by Figures 3.5.4-1 through 3.5.4-12 which detail the twelve standard deck beam cross sections. These figures include the basic cross sectional dimensions and a layout of the standard grid system for location of strands.

Deck Beam Design Properties										
Beam	**Net Area** (in.^{2})	**I** (in.^{4})	**S_b** (in.^{3})	**S_t** (in.^{3})	**K**	**C_b** (in.)	**C_t** (in.)	**Net Weight** (lbs/ft.)	**Solid Weight** (lbs/ft.)	**Shear Key Wt.** (lbs/ft.)
11x48	513.2	5191	947.0	940.8	0.59	5.48	5.52	-	535	13
11x52	557.2	5635	1027.7	1021.5	0.58	5.48	5.52	-	580	13
17x36	471.9	13924	1655.6	1621.0	0.72	8.41	8.59	492	621	14
17x48	615.9	18658	2213.0	2177.4	0.68	8.43	8.57	642	834	14
21x36	527.9	25255	2434.0	2377.2	0.75	10.38	10.62	550	771	14
21x48	679.9	33685	3237.8	3178.9	0.70	10.40	10.60	708	1033	14
27x36	569.9	49697	3738.1	3626.1	0.81	13.30	13.71	594	986	25
27x48	701.9	65288	4896.7	4777.2	0.73	13.33	13.67	731	1323	25
33x36	641.9	84463	5208.4	5032.6	0.87	16.22	16.78	669	1211	25
33x48	773.9	109761	6748.3	6558.3	0.78	16.27	16.74	806	1623	25
42x36	749.9	158672	7692.0	7424.3	0.96	20.63	21.37	781	1548	25
42x48	881.9	202984	9813.7	9522.5	0.84	20.68	21.32	919	2073	25

Table 3.5.4-1

I = Moment of inertia of the prestressed beam

S_b = Non-composite section modulus for the bottom fiber of the prestressed beam

S_t = Non-composite section modulus for the top fiber of the prestressed beam

K = Constant for different types of construction

C_b = Distance from the centroid of the prestressed beam to the bottom of the beam

C_t = Distance from the centroid of the prestressed beam to the top of the beam

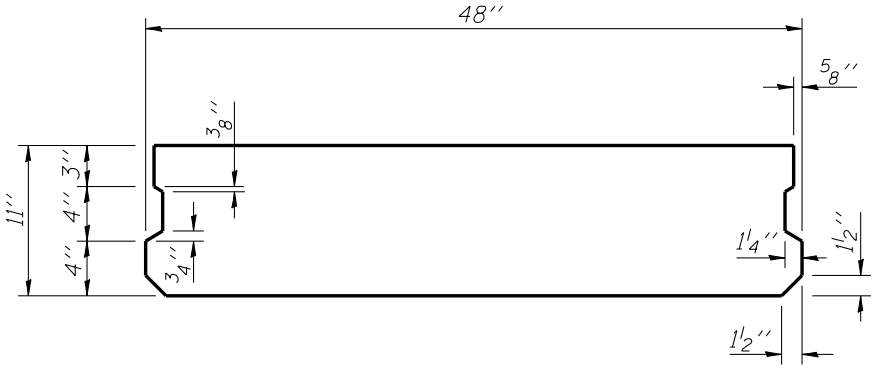

CROSS SECTION
(Showing dimensions)

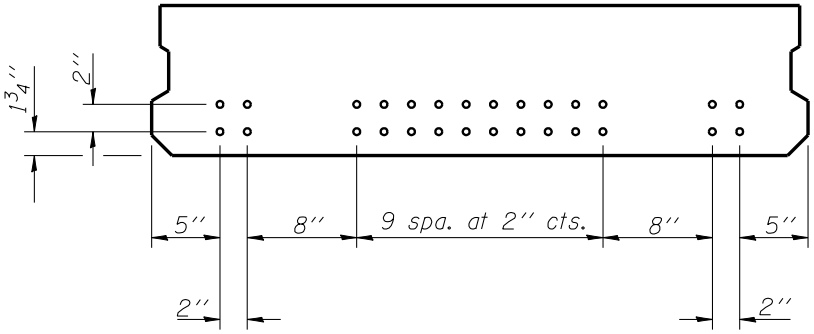

CROSS SECTION
(Showing permissible strand locations)

11'' x 48'' PPC
DECK BEAM

Figure 3.5.4-1

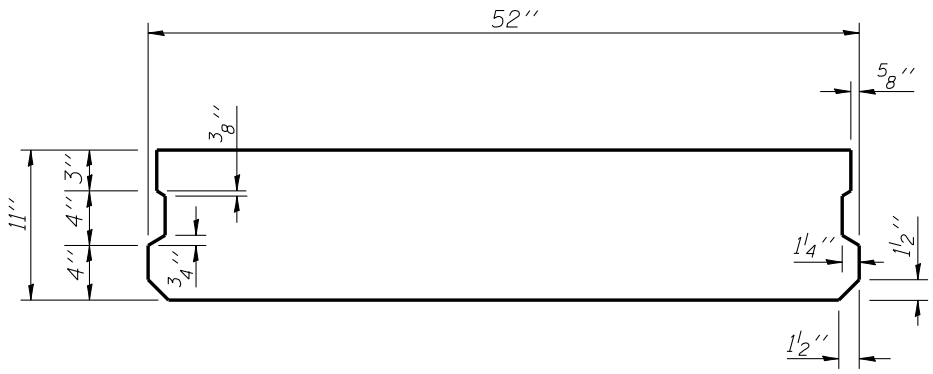

CROSS SECTION
(Showing dimensions)

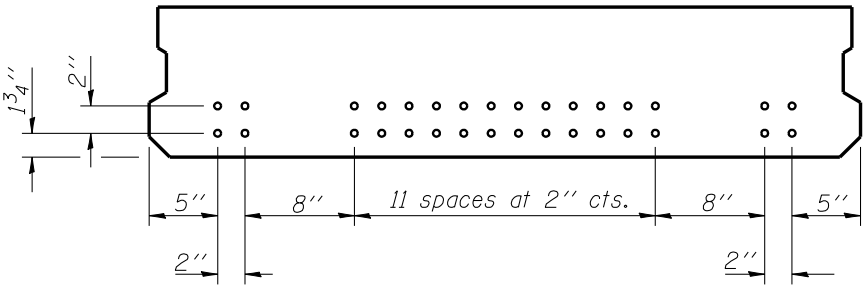

CROSS SECTION
(Showing permissible strand locations)

11'' X 52'' PPC
DECK BEAM

Figure 3.5.4-2

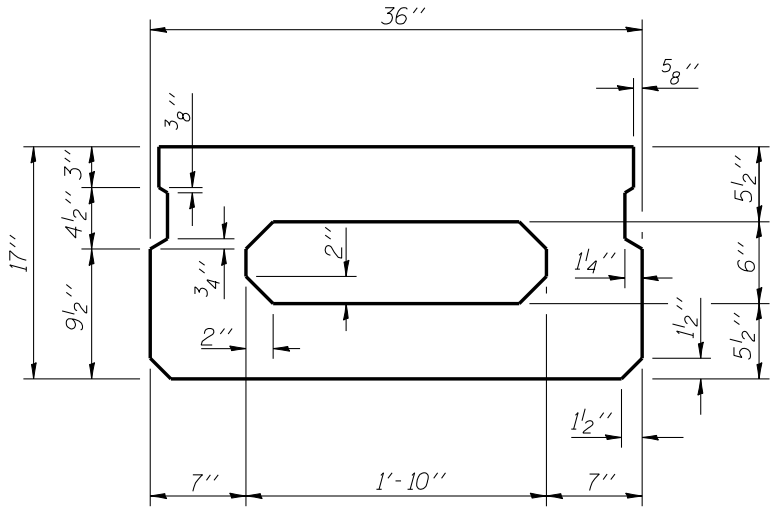

CROSS SECTION
(Showing dimensions)

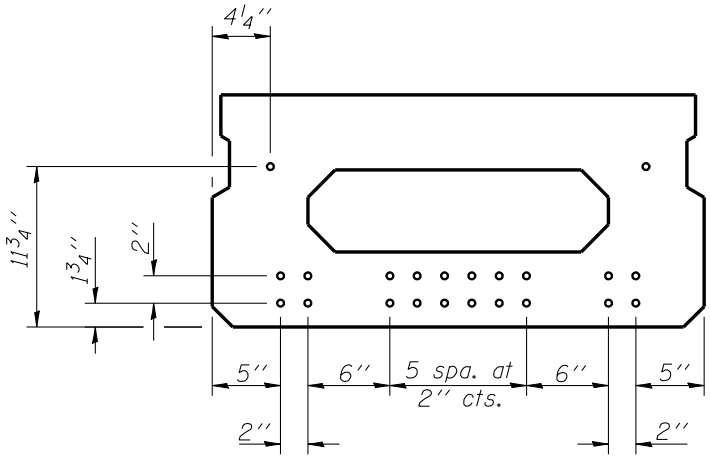

CROSS SECTION
(Showing permissible strand locations)

17'' X 36'' PPC
DECK BEAM

Figure 3.5.4-3

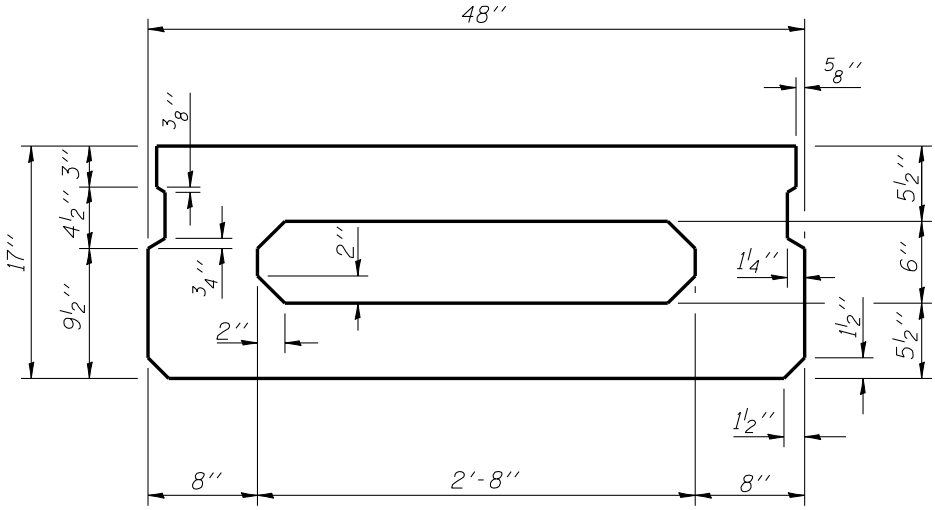

CROSS SECTION
(Showing dimensions)

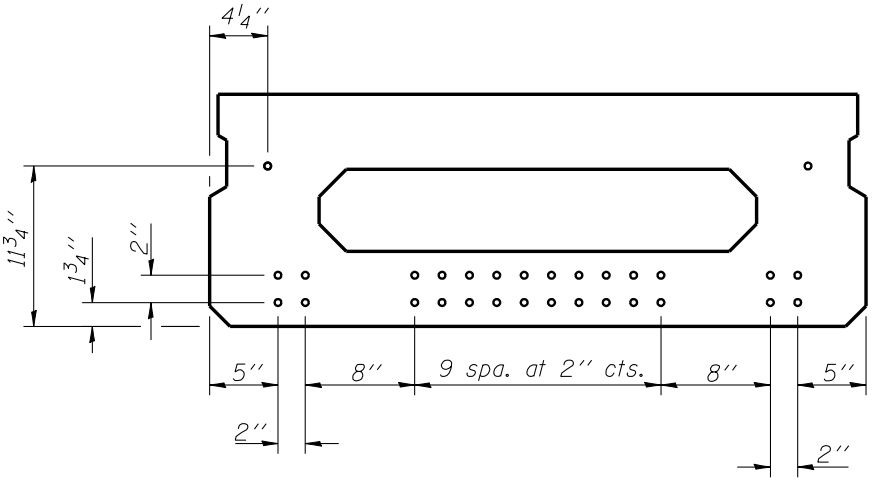

CROSS SECTION
(Showing permissible strand locations)

17'' X 48'' PPC
DECK BEAM

Figure 3.5.4-4

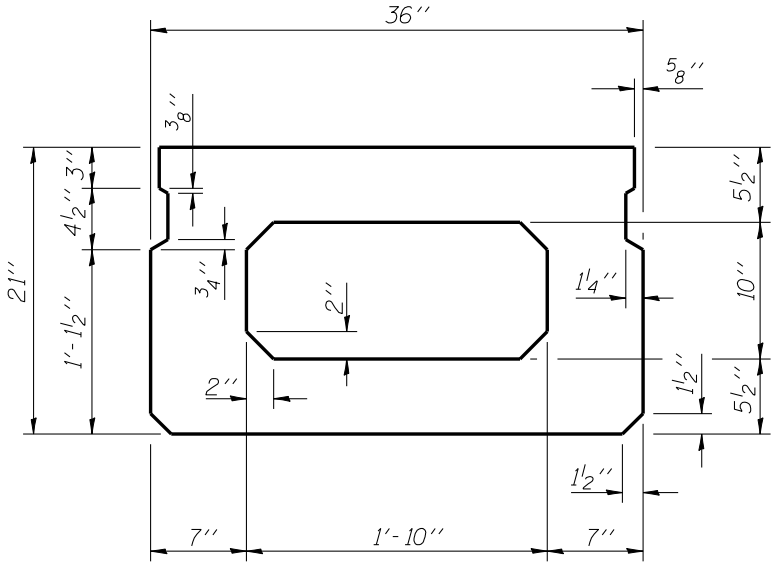

CROSS SECTION
(Showing dimensions)

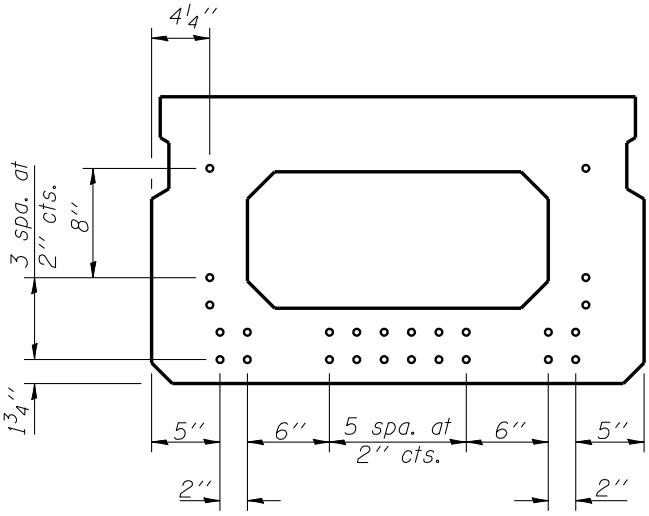

CROSS SECTION
(Showing permissible strand locations)

21'' X 36'' PPC
DECK BEAM

Figure 3.5.4-5

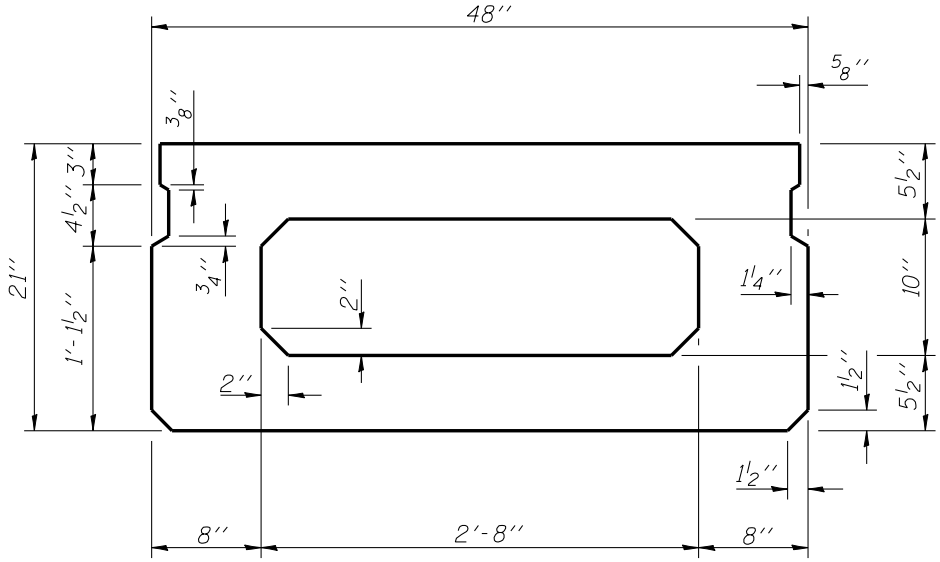

CROSS SECTION
(Showing dimensions)

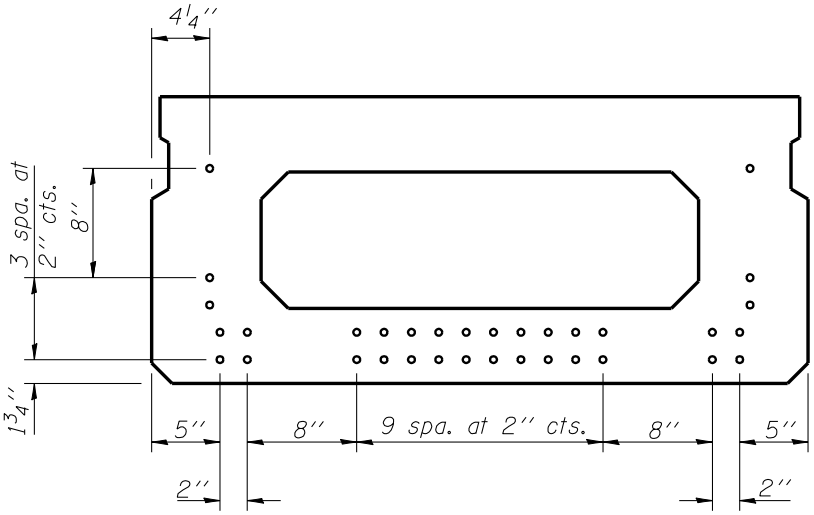

CROSS SECTION
(Showing permissible strand location)

21'' X 48'' PPC
DECK BEAM

Figure 3.5.4-6

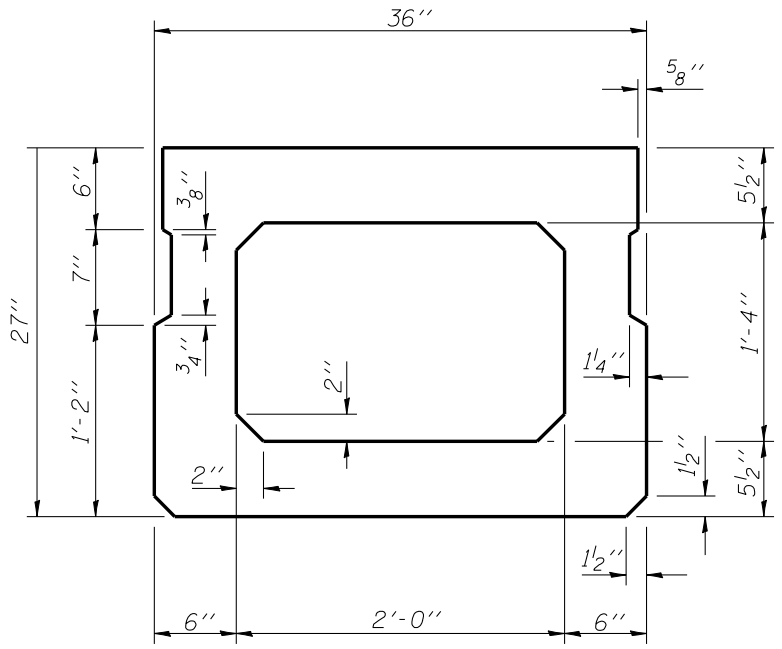

CROSS SECTION
(Showing dimensions)

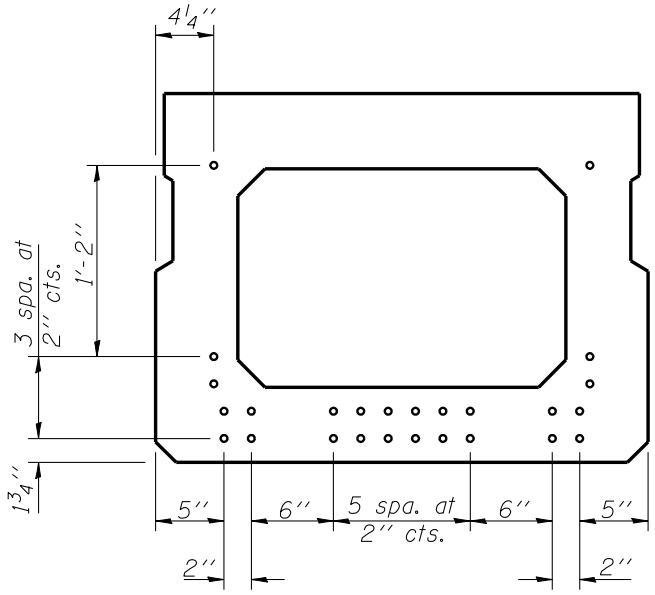

CROSS SECTION
(Showing permissible strand locations)

27'' X 36'' PPC
DECK BEAM

Figure 3.5.4-7

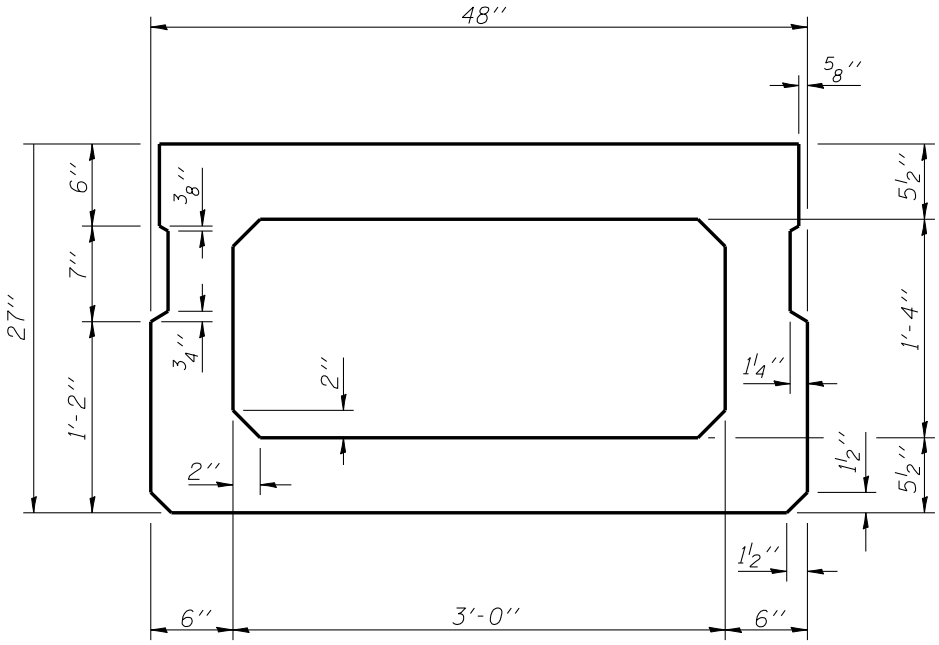

CROSS SECTION
(Showing Dimensions)

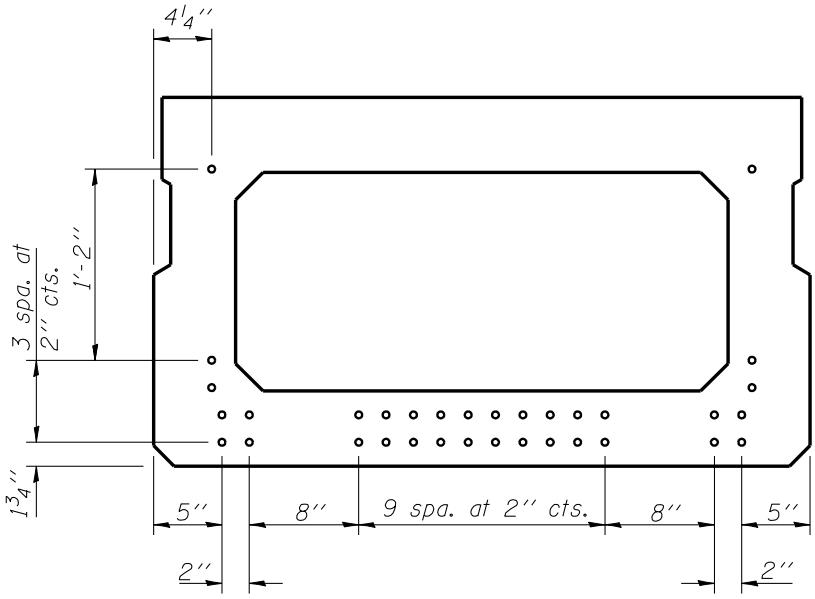

CROSS SECTION
(Showing permissible strand location)

27'' X 48'' PPC
DECK BEAM

Figure 3.5.4-8

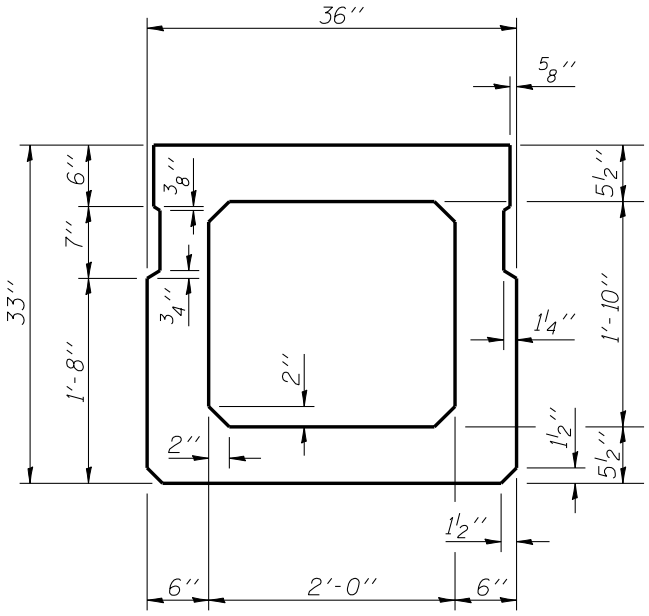

CROSS SECTION
(Showing dimensions)

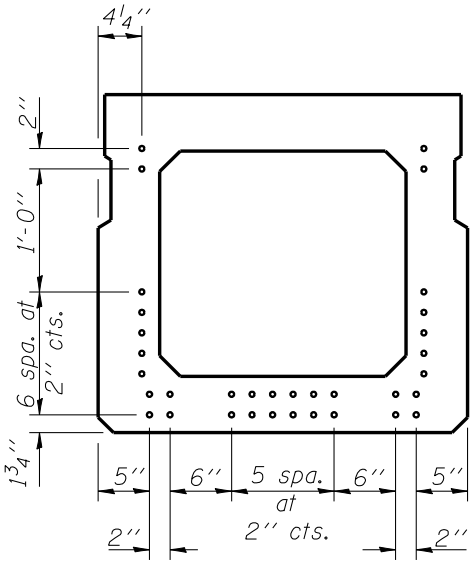

CROSS SECTION
(Showing permissible strand locations)

33'' X 36'' PPC
DECK BEAM

Figure 3.5.4-9

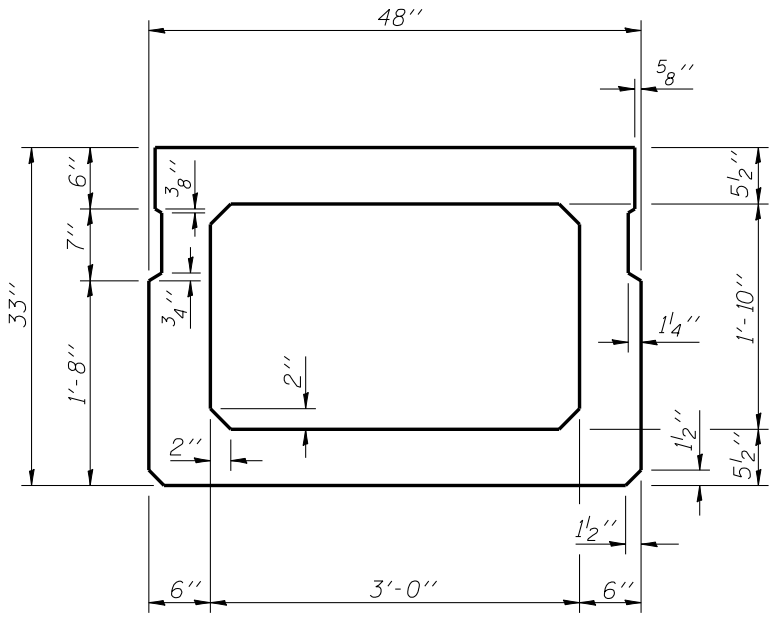

CROSS SECTION
(Showing Dimensions)

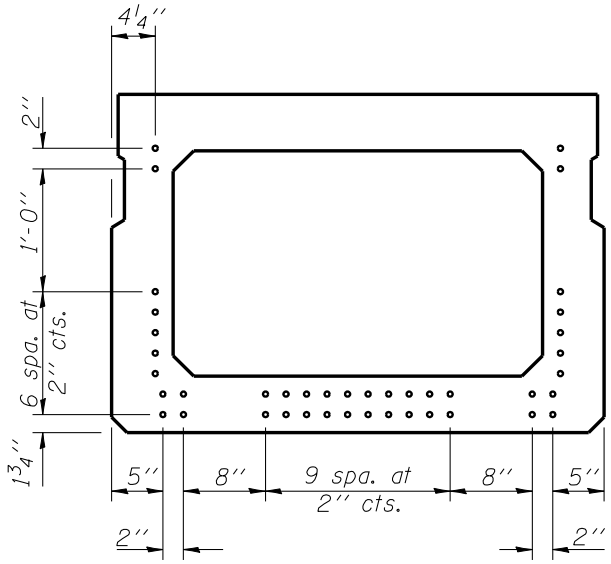

CROSS SECTION
(Showing permissible strand locations)

33'' X 48'' PPC
DECK BEAM

Figure 3.5.4-10

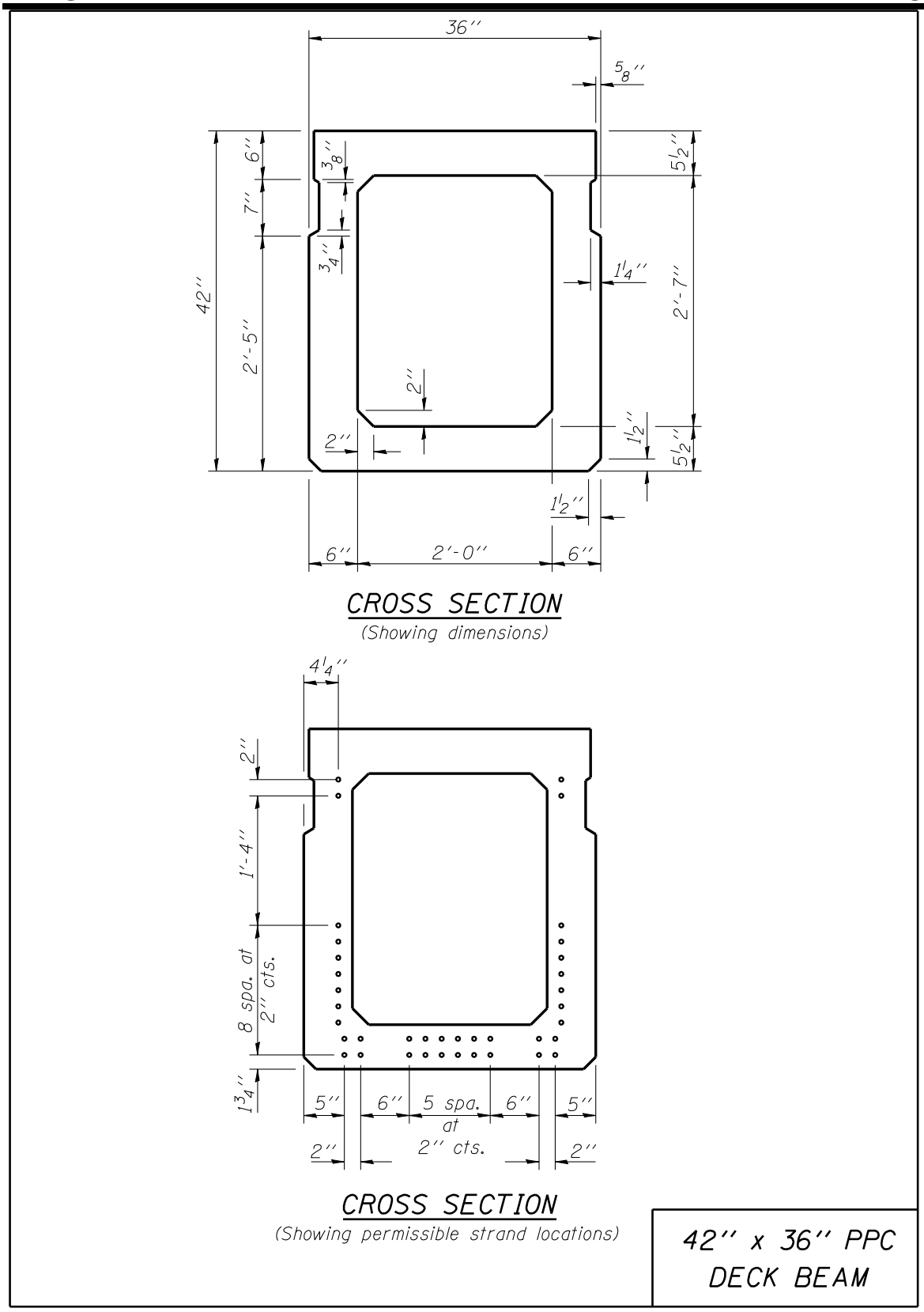

Figure 3.5.4-11

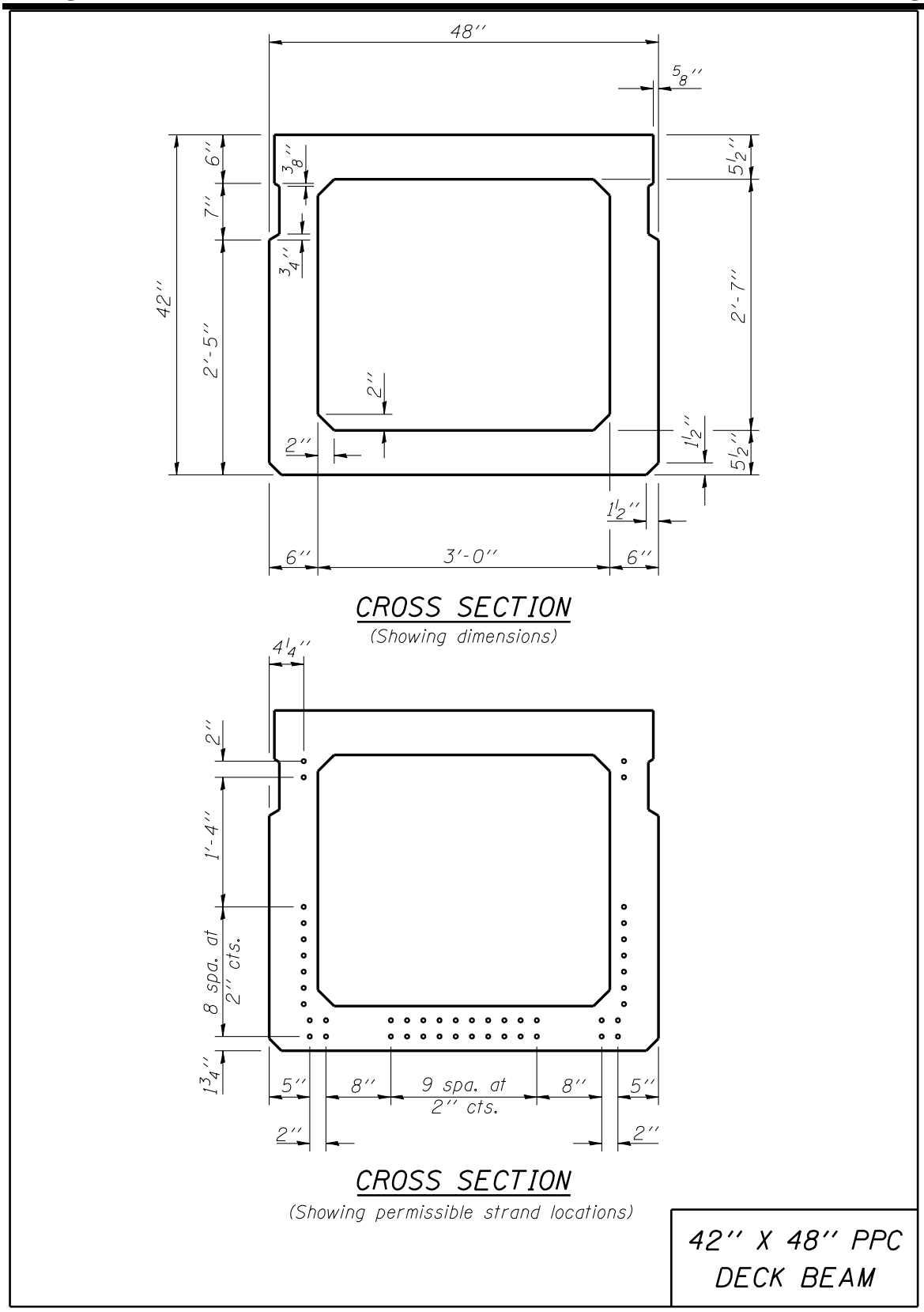

Figure 3.5.4-12

3.5.5 Design for Shear

The shear reinforcement for the standard deck beam sections is shown on the base sheets which are available on the Department's web site. This shear reinforcement satisfies the requirements of the LRFD Specifications for the standard load combinations specified in Section 2.3.6.1.2. Deck beams with skews, design properties and loads (i.e. sidewalks, medians, etc.) other than depicted in this manual and the base sheets shall be independently designed for shear according to the LRFD Specifications. In no case shall an independently designed deck beam have less shear reinforcement than that specified in the base sheets.

3.5.6 Fixed Substructures

Deck beam structures typically have fixed substructure connections as described previously in Section 3.5. The fixity is achieved by drilling and grouting dowel rods through the formed holes in the beam ends. The total sequence of construction is described in more detail in the standard specifications and in notes on the base sheets. Versions of the typical abutment and pier cross sections, suitable for inclusion on the base sheets, are available in the IDOT Detail Library.

3.5.6.1 Abutment Sections

Figures 3.5.6.1-1 through 3.5.6.1-3 show the typical cross sections for the various deck beam depths having either a Concrete Wearing Surface (CWS) or a Hot Mix Asphalt (HMA) wearing surface. A joint is either formed for CWS or sawed for HMA in the wearing surface at the approach slab to deck beam interface where a crack is anticipated. The abutment is notched on the shallow 11 inch deck beams and a backwall is required on the deeper sections. Figure 3.5.6.1-4 shows the typical cross sections with no approach pavements which may be used on Local projects.

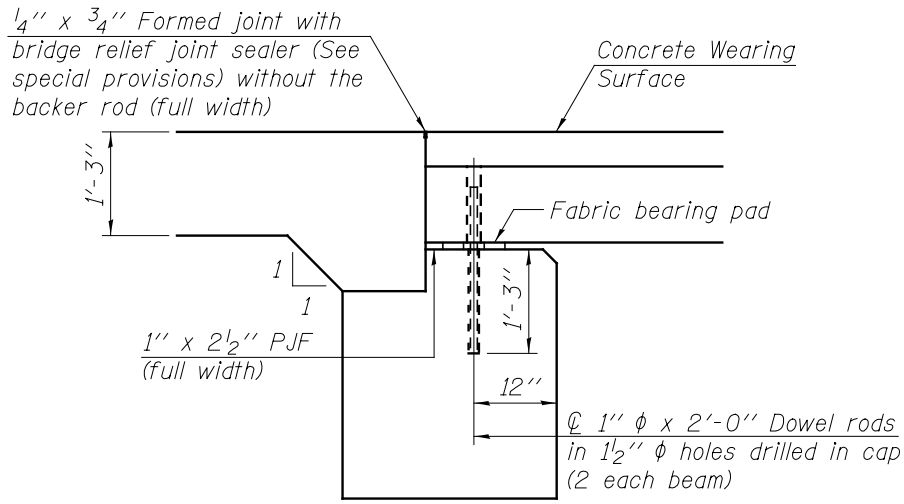

SECTION THRU ABUTMENT

(With concrete wearing surface)
(Dimensions are at Rt. L's)

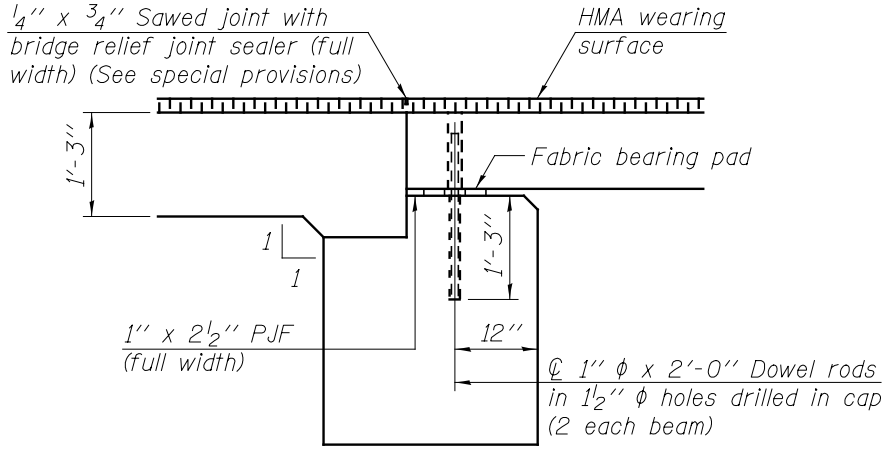

SECTION THRU ABUTMENT

(With HMA wearing surface)
(Dimensions are at Rt. L's)

Notes:
For abutment details and reinforcement, see Fig. 3.8.14-1.

FIXED ABUTMENT SECTIONS 11" BEAMS

Figure 3.5.6.1-1

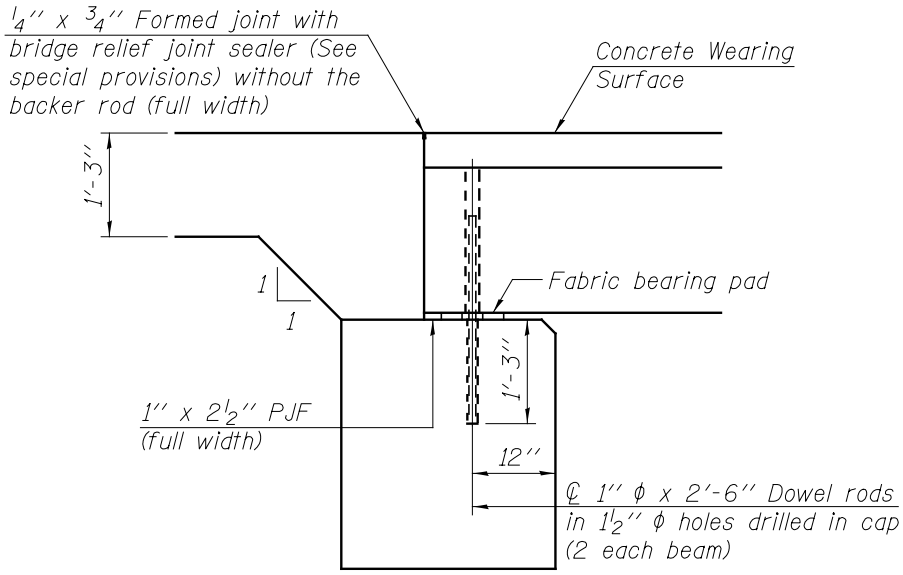

SECTION THRU ABUTMENT

(With concrete wearing surface)
(Dimensions are at Rt. ∟'s)

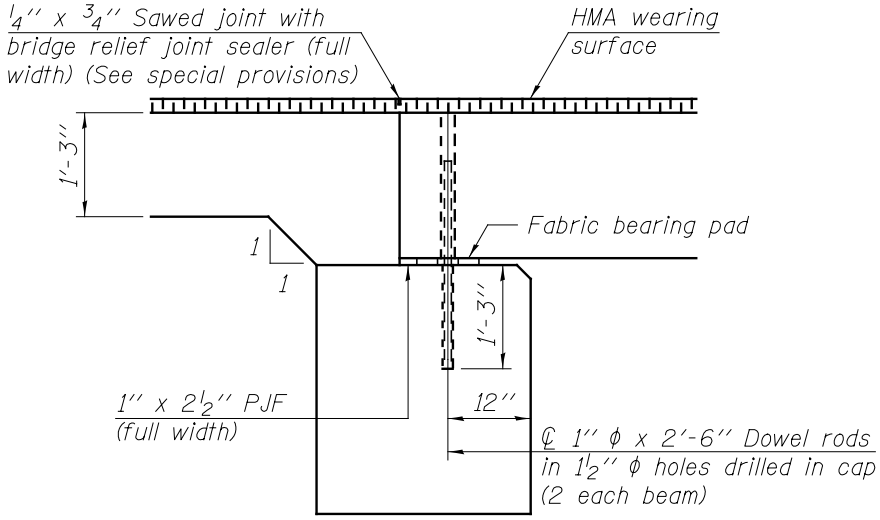

SECTION THRU ABUTMENT

(With HMA wearing surface)
(Dimensions are at Rt. ∟'s)

Notes:
For abutment details and reinforcement, see Fig. 3.8.14-2.

FIXED ABUTMENT SECTIONS 17''-21'' BEAMS

Figure 3.5.6.1-2

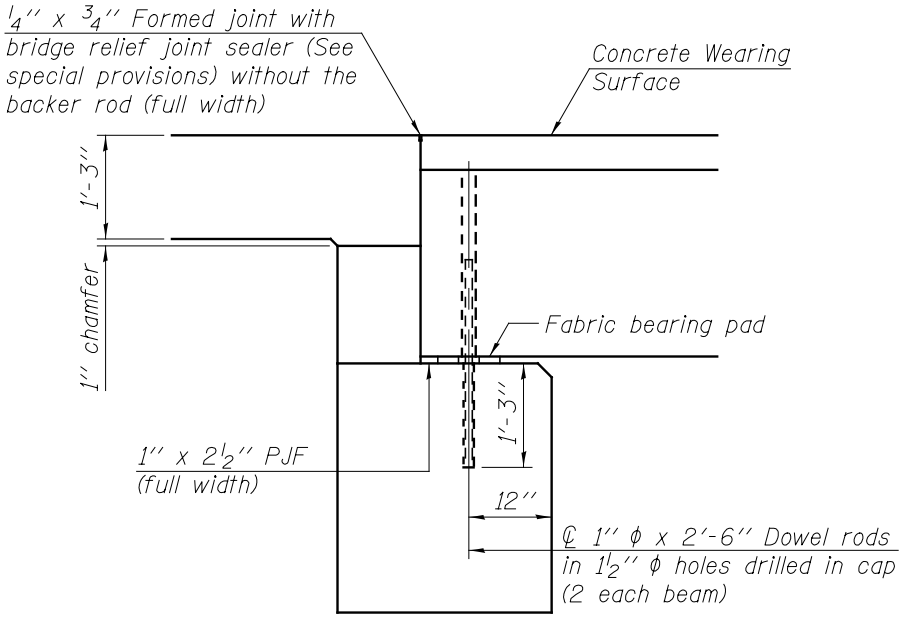

SECTION THRU ABUTMENT

(With concrete wearing surface)
(Dimensions are at Rt. L's)

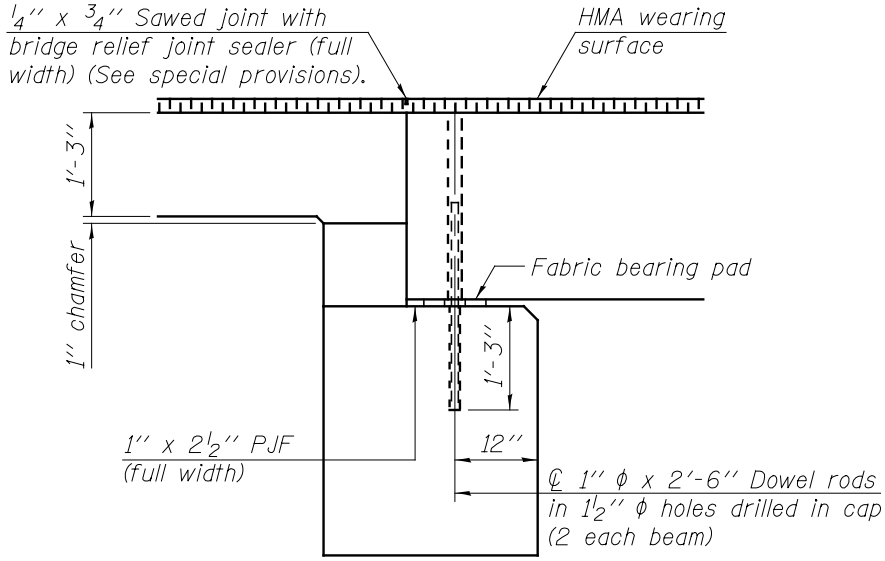

SECTION THRU ABUTMENT

(With HMA wearing surface)
(Dimensions are at Rt. L's)

Notes:
For abutment details and reinforcement, see Fig. 3.8.14-3.

FIXED ABUTMENT SECTIONS 27''-42'' BEAMS

Figure 3.5.6.1-3

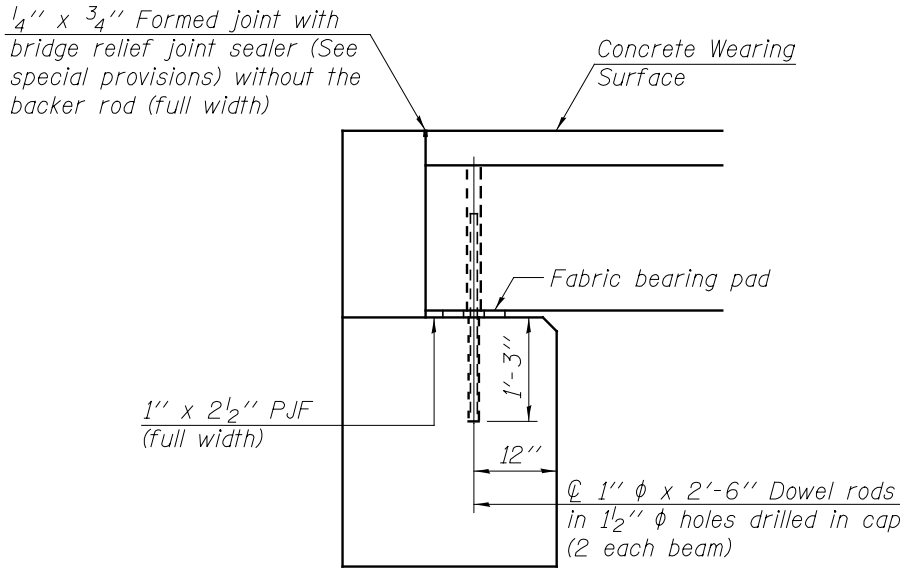

SECTION THRU ABUTMENT

(With concrete wearing surface)
(Dimensions are at Rt. ∟'s)

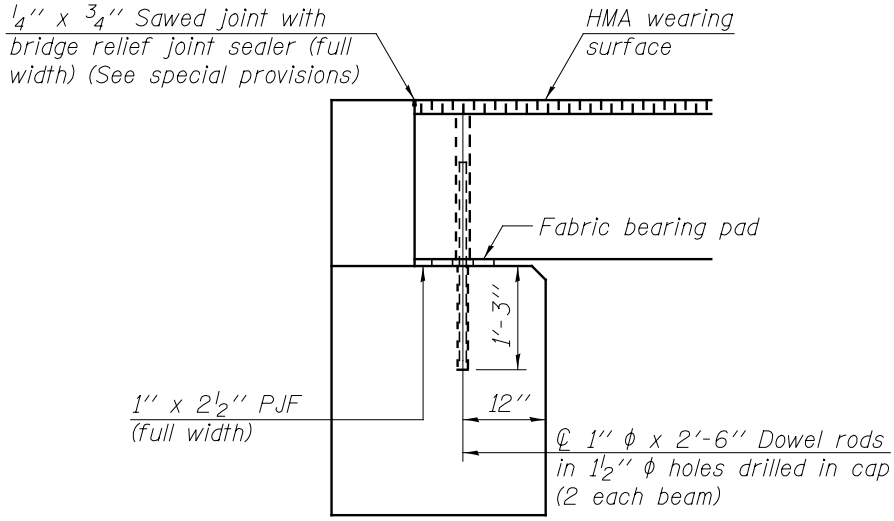

SECTION THRU ABUTMENT

(With HMA wearing surface)
(Dimensions are at Rt. ∟'s)

Notes:
For abutment details and reinforcement, see Fig. 3.8.14-4.

FIXED ABUTMENT SECTIONS
11"-42" BEAMS
NO APPROACH PAVEMENT

Figure 3.5.6.1-4

3.5.6.2 Pier Sections

Figure 3.5.6.2-1 shows the typical cross section with either CWS or HMA. A joint is either formed for CWS or sawed for HMA in the wearing surface at the center line of the pier where a crack is anticipated. A 1 inch gap filled with non-shrink grout shall be provided between the deck beam ends. This gap may vary to account for tolerances in beam lengths.

3.5.6.3 Fixed Bearings

The typical fixed bearings for deck beams are detailed on the base sheets. A 1 inch fabric bearing pad is configured to straddle across two beam sections from dowel rod to dowel rod. Straddling the bearing pad with proper shimming helps to prevent differential beam movement and maintain the integrity of the shear key. If the profile grade of the structure is too steep such that the 1 inch bearing pad is not sufficient to prevent the deck beam from bearing directly on the abutment or pier cap, then the caps shall be sloped as necessary to prevent beam to substructure contact.

Skews larger than 35 degrees are not permitted on State projects because they create fabrication and constructability problems and make it more difficult to prevent differential beam movement. However, on Local projects the skew limit is sometimes permitted to be exceeded. In these cases, an alternate fixed bearing detail shall be used to help prevent differential beam movement. See Figures 3.5.6.3-1 through 3.5.6.3-3 for details.

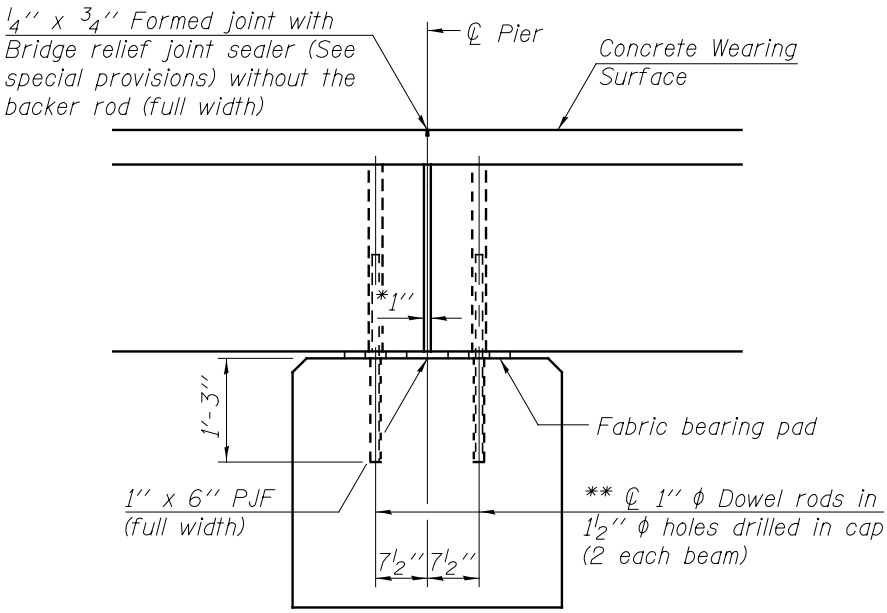

SECTION THRU PIER

(With concrete wearing surface)
(Dimensions are at Rt. L's)

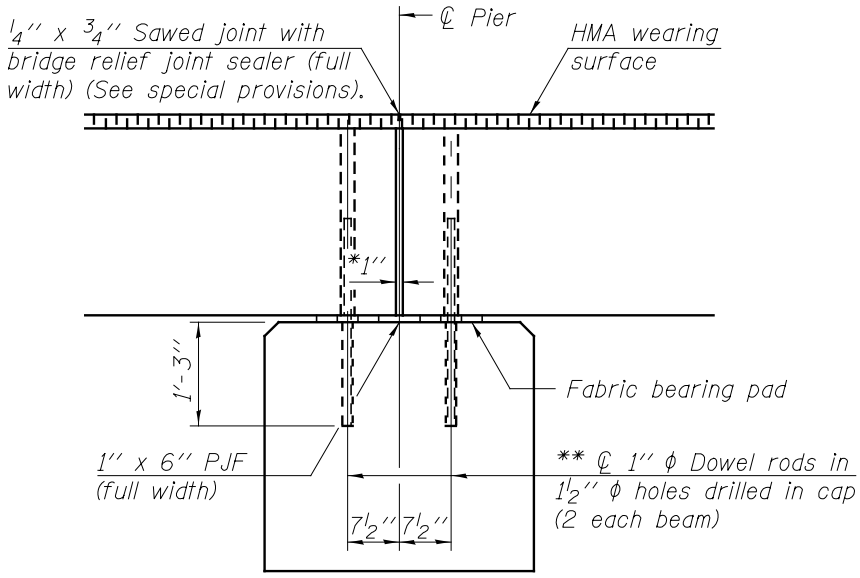

SECTION THRU PIER

(With HMA wearing surface)
(Dimensions are at Rt. L's)

Notes:
For pier details and reinforcement, see Fig. 3.9.8-1.

* 1'' Joint shall be filled with non-shrink grout. 1'' dimension may vary to accommodate tolerance in beam length.

** 2'-0'' long for 11'' beams
2'-6'' long 17'' thru 42'' beams

FIXED PIER SECTIONS
11''-42'' BEAMS

Figure 3.5.6.2-1

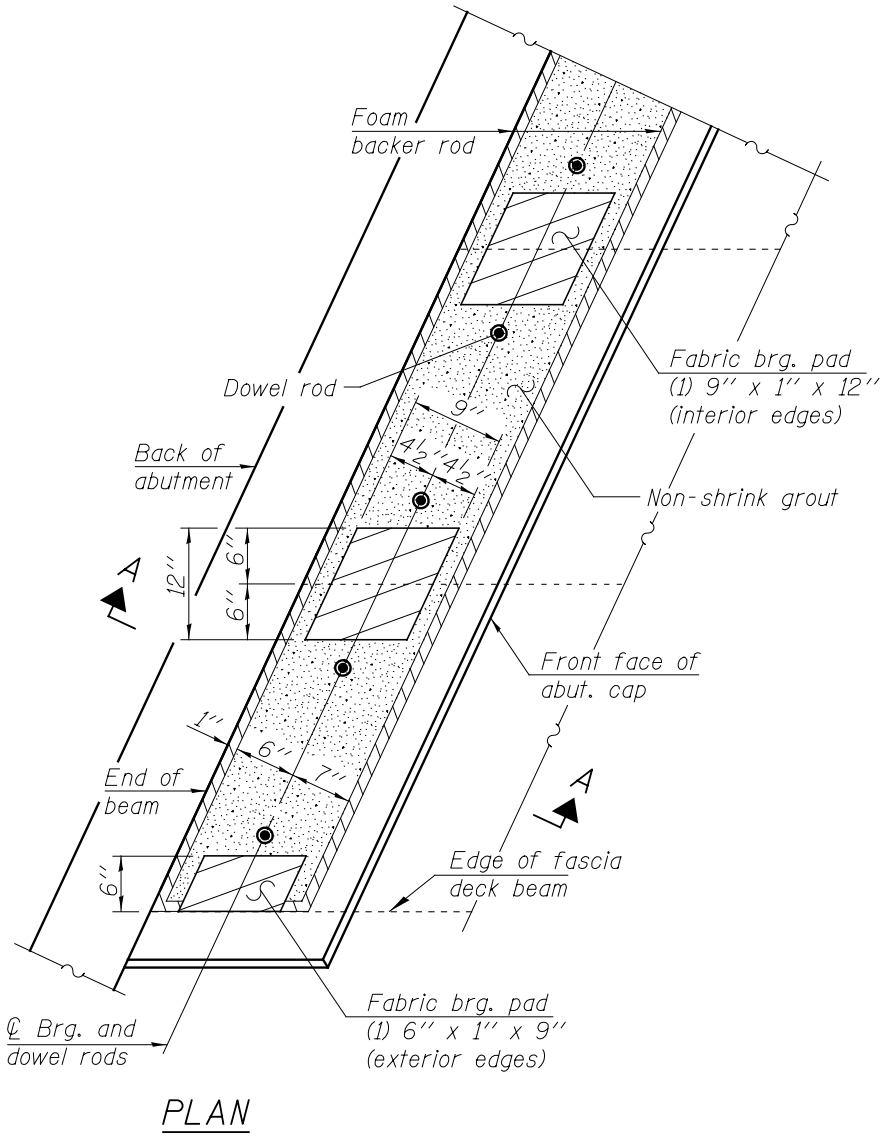

Notes:

The alternate bearing detail shown may be used on a case by case basis to be approved by the Bureau of Bridges and Structures.

The bearing seat surfaces shall be adjusted by shimming the bearing to assure firm and even bearing prior to placement of grout. 2-⅛'' fabric adjusting shims of the dimensions of the exterior bearing pad shown shall be provided for each bearing.

See Fig. 3.5.6.3-3 for Section A-A.

ALTERNATE FIXED BEARINGS AT ABUTMENT

Figure 3.5.6.3-1

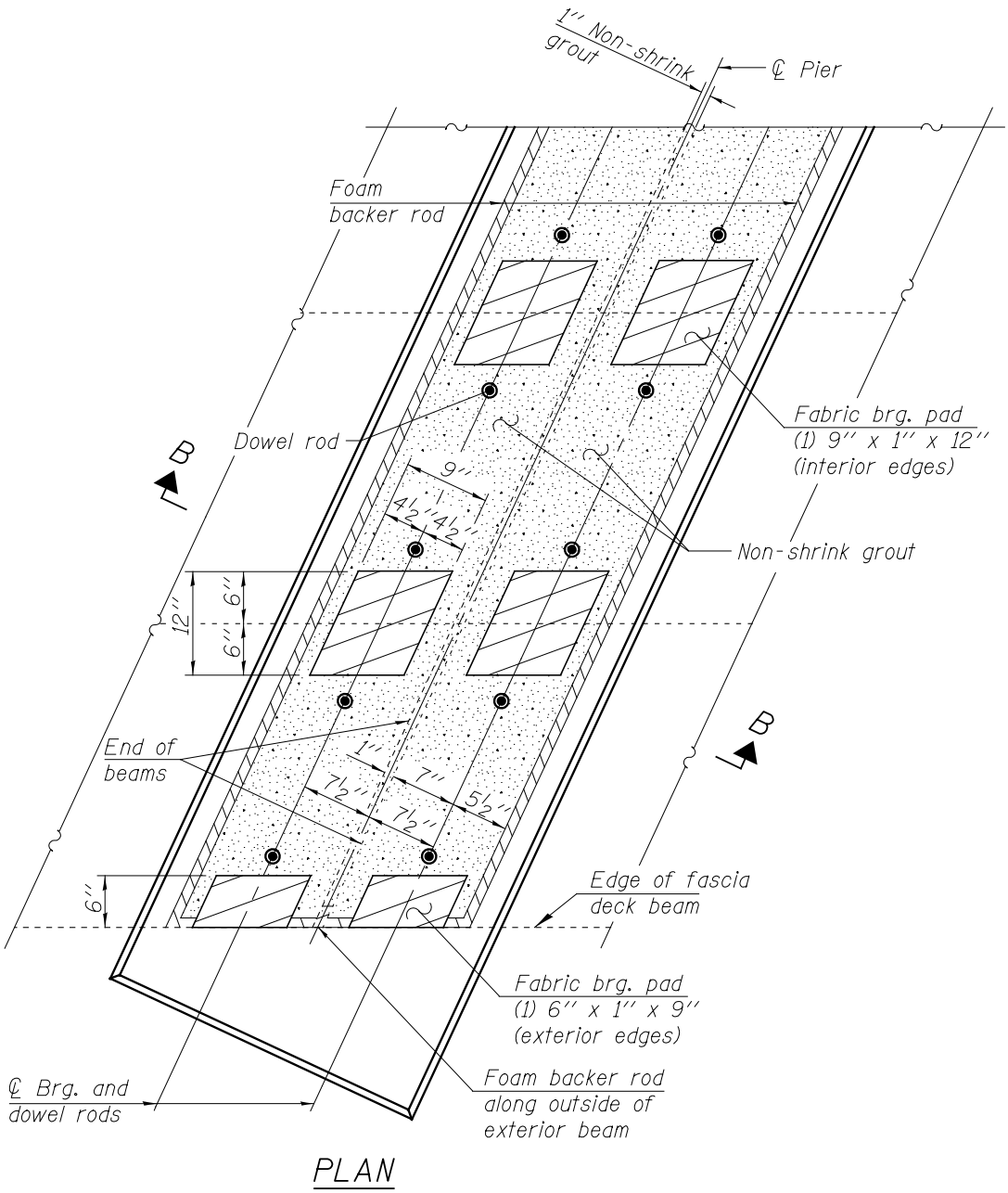

Notes:

The alternate bearing detail shown may be used on a case by case basis to be approved by the Bureau of Bridges and Structures.

The bearing seat surfaces shall be adjusted by shimming the bearing to assure firm and even bearing prior to placement of grout. 2-⅛'' fabric adjusting shims of the dimensions of the exterior bearing pad shown shall be provided for each bearing.

See Fig. 3.5.6.3-3 for Section B-B.

ALTERNATE FIXED BEARINGS AT PIER

Figure 3.5.6.3-2

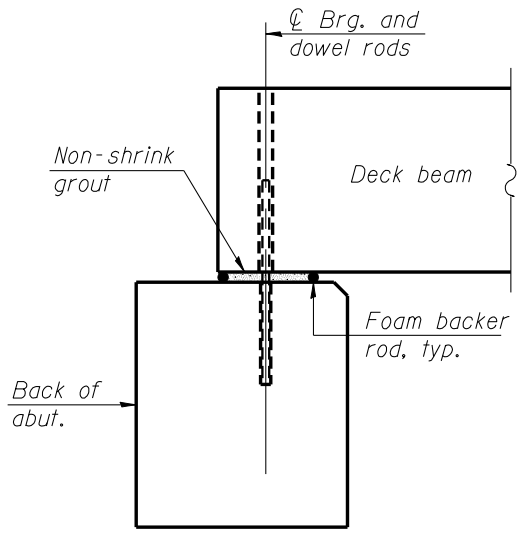

SECTION A-A

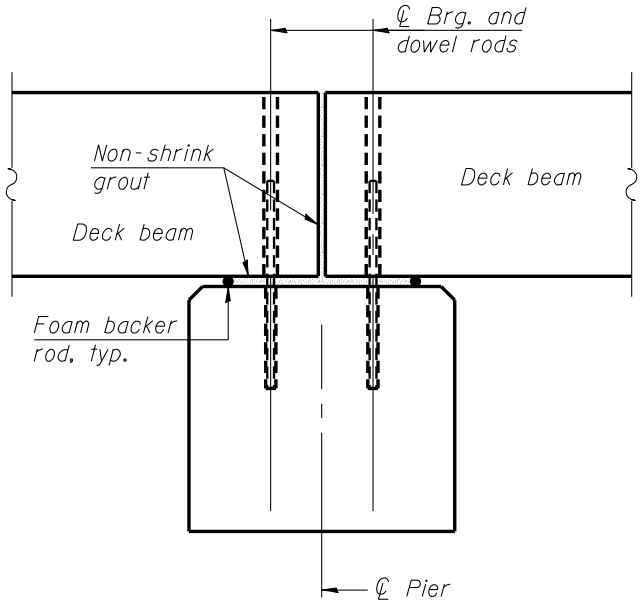

SECTION B-B

ALTERNATE FIXED
BEARING SECTIONS

Figure 3.5.6.3-3

3.5.7 Expansion Substructures

Expansion substructures are necessary when the total deck beam structure length exceeds 300 feet. Versions of the typical abutment and pier cross sections, suitable for inclusion on the base sheets, are available in the IDOT Detail Library. Note that the standard base sheets are set up for fixed substructures since expansion deck beam structures are rare. Therefore, additional modifications to the standard base sheets are necessary when expansion substructures are required.

3.5.7.1 Abutment Sections

Figures 3.5.7.1-1 through 3.5.7.1-3 show the typical cross sections for the various deck beam depths having either a Concrete Wearing Surface (CWS) or a Hot Mix Asphalt (HMA) wearing surface. The abutment is notched on the shallow 11 inch deck beams and a backwall is required on the deeper sections. Figure 3.5.7.1-4 shows the typical cross sections with no approach pavements which may be used on Local projects.

An expansion joint on an 11 inch deck beam superstructure with HMA wearing surface is not permitted because the 11 inch beam is too shallow to notch.

The approach slab is poured flush with the riding surface when an expansion joint is necessary on a deck beam structure with an HMA wearing surface. This is primarily for ease of constructability.

3.5.7.2 Pier Sections

Figure 3.5.7.2-1 shows the typical cross section with either CWS or HMA. Similar to the abutment cross sections, an expansion joint on an 11 inch deck beam superstructure with HMA wearing surface is not permitted.

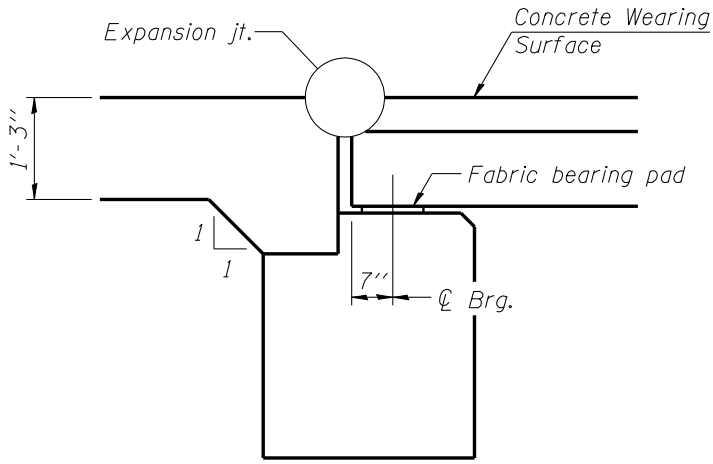

SECTION THRU ABUTMENT

(With concrete wearing surface)
(Dimensions are at Rt. ∟'s)

Notes:

For abutment details and reinforcement, see Fig. 3.8.14-1.

Section with HMA wearing surface not applicable for 11" beams since the notch cast into the end is not allowed for these beams.

EXPANSION ABUTMENT SECTIONS
11" BEAMS

Figure 3.5.7.1-1

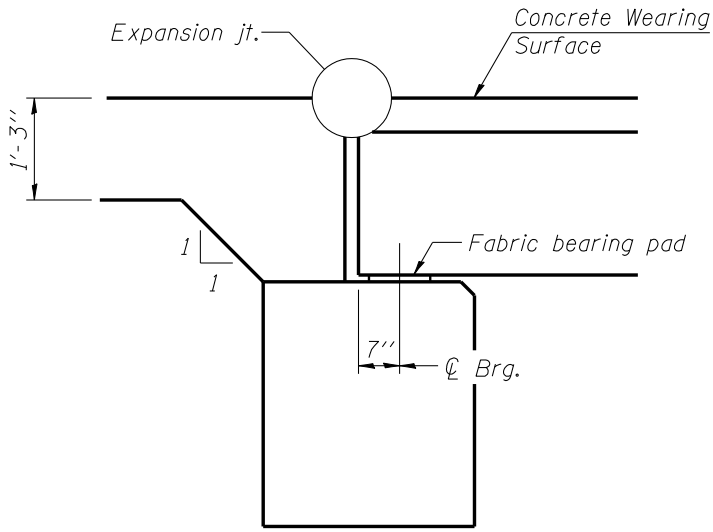

SECTION THRU ABUTMENT
(With concrete wearing surface)
(Dimensions are at Rt. ∟'s)

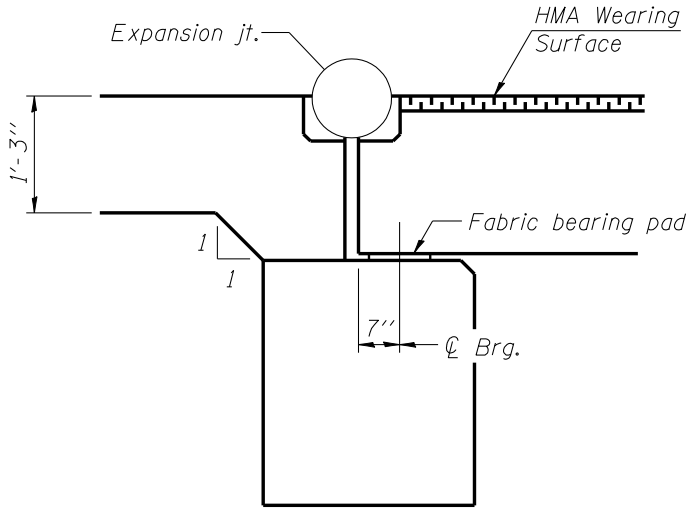

SECTION THRU ABUTMENT
(With HMA wearing surface)
(Dimensions are at Rt. ∟'s)

Notes:
For abutment details and reinforcement, see Fig. 3.8.14-2.

EXPANSION ABUTMENT SECTIONS
17"-21" BEAMS

Figure 3.5.7.1-2

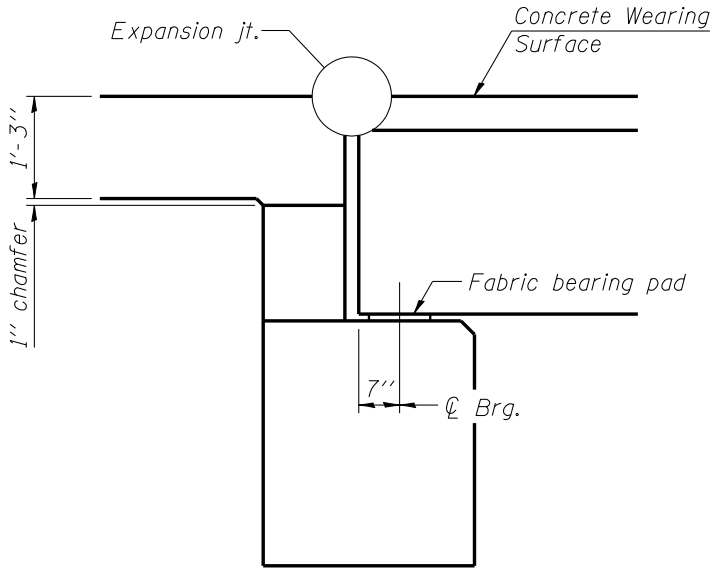

SECTION THRU ABUTMENT
(With concrete wearing surface)
(Dimensions are at Rt. ∟'s)

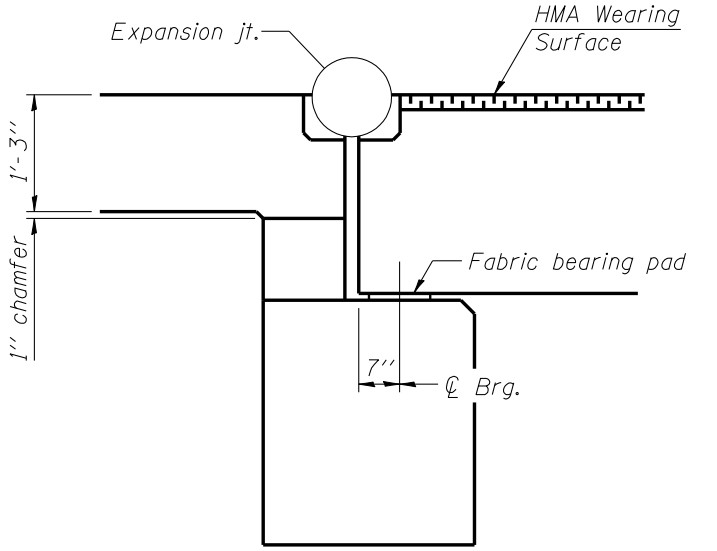

SECTION THRU ABUTMENT
(With HMA wearing surface)
(Dimensions are at Rt. ∟'s)

Notes:
For abutment details and reinforcement, see Fig. 3.8.14-3.

EXPANSION ABUTMENT SECTIONS
27"-42" BEAMS

Figure 3.5.7.1-3

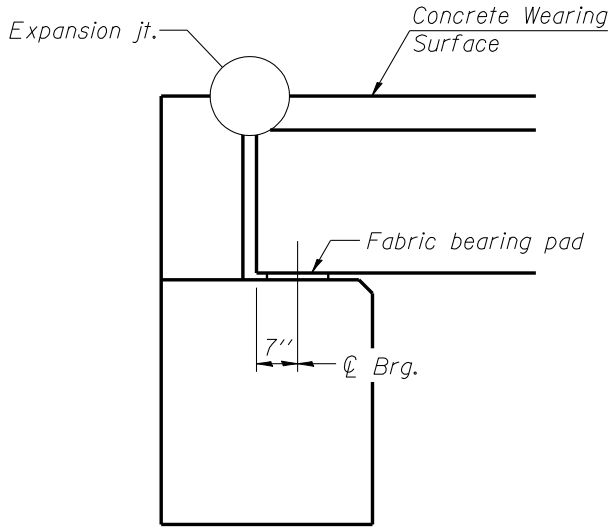

SECTION THRU ABUTMENT
(With concrete wearing surface)
(Dimensions are at Rt. ∟'s)

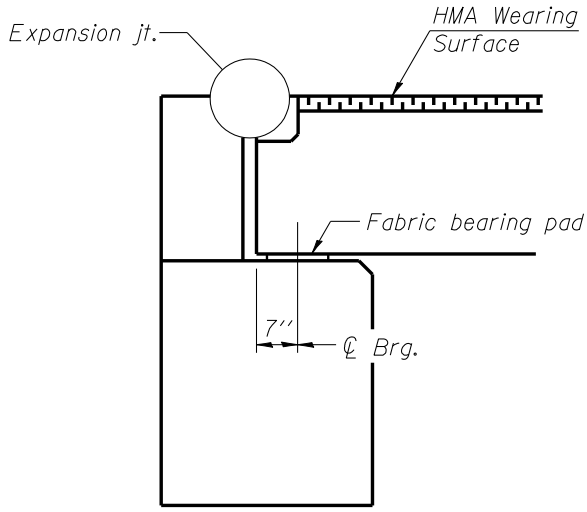

SECTION THRU ABUTMENT
(With HMA wearing surface)
(Dimensions are at Rt. ∟'s)

Notes:
For abutment details and reinforcement, see Fig. 3.8.14-4.

* Section with HMA wearing surface not applicable for 11'' beams since the notch cast into the end is not allowed for these beams.

EXPANSION ABUTMENT SECTIONS
11''-42'' BEAMS
NO APPROACH PAVEMENT

Figure 3.5.7.1-4

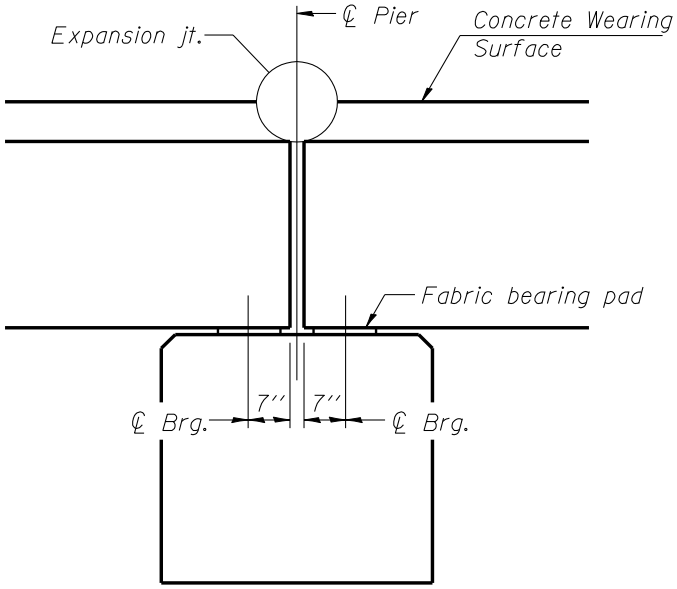

SECTION THRU PIER
(With concrete wearing surface)
(Dimensions are at Rt. ∟'s)

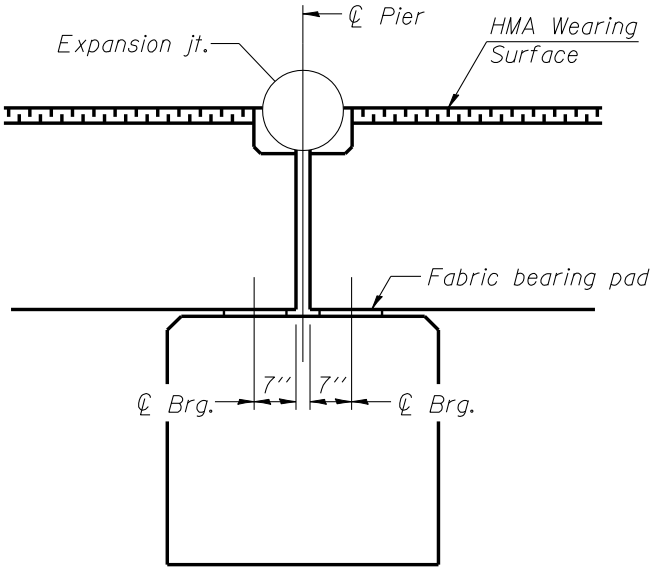

* SECTION THRU PIER
(With HMA wearing surface)
(Dimensions are at Rt. ∟'s)

Notes:
For pier details and reinforcement, see Fig. 3.9.9-1.

* Section with HMA wearing surface not applicable for 11'' beams since the notch cast into the end is not allowed for these beams.

EXPANSION PIER SECTIONS
11''-42'' BEAMS

Figure 3.5.7.2-1

3.5.7.3 Expansion Bearings

Expansion bearing details are similar to the fixed bearing details with two exceptions. The 1 inch fabric bearing pad shall have the same dimensions of the fixed bearing pad except the holes in the fabric bearing pads are not necessary since there are no dowel rods. The pad shall also be bonded to the substructure. These two exception are noted on the base sheets.

3.5.7.4 Expansion Joint Treatments

Figures 3.5.7.4-1 through 3.5.7.4-3 show typical expansion joint treatments for the various standard deck beam depths to be used with the strip seal expansion joint detailed in Figure 3.6.2.1-4. Deck beams with CWS do not need to be notched because the expansion joint is shallow enough to fit within the CWS. Deck beams with HMA require a notch for proper connection of the joint. The beam notch is filled with a field cast reinforced concrete block which enables the joint to be cast flush with the riding surface. The additional bars and inserts necessary to be cast into the beam for the notch/block are not on the standard base sheets and will need to be added when applicable.

3.5.7.5 Retainer Angles

Retainer angles at expansion joints are required and shall remain in place. See Figure 3.5.7.5-1 for details.

X = 1¼″ min. HMA wearing surface plus beam camber.
Y = 5″ min. concrete wearing surface plus beam camber.

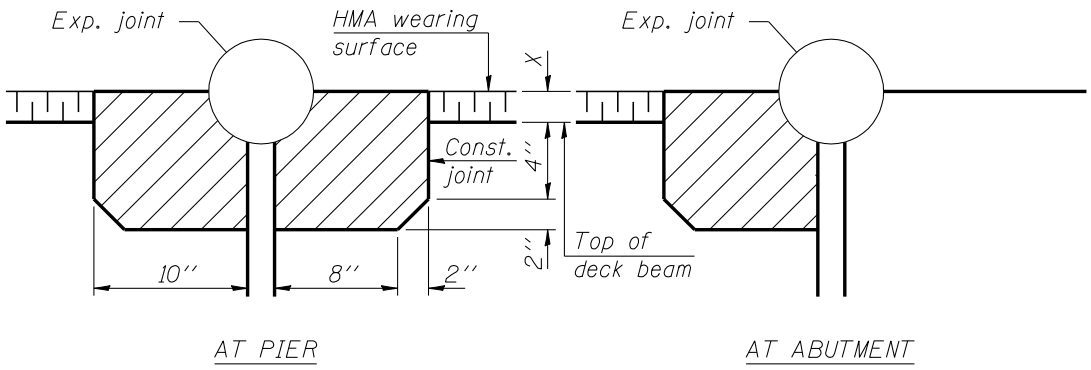

EXPANSION JOINT TREATMENT

(17″-42″ beams, with HMA wearing surface)

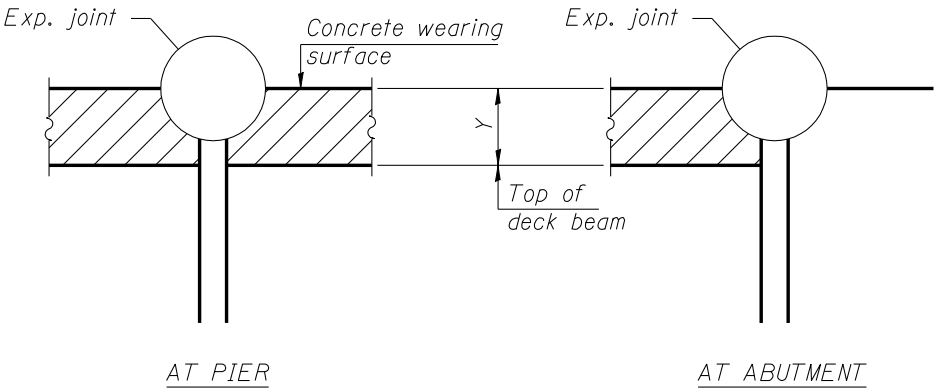

EXPANSION JOINT TREATMENT

(11″-42″ beams, with concrete wearing surface)

Notes:
For expansion joint details, see Fig. 3.6.2.1-4.
For reinforcement details, see Fig. 3.5.7.4-2 & 3.5.7.4-3.
Dimensions are at right angles.
Hatched areas to be poured after beams have been erected and joints grouted. Ends of beams shall be aligned at the expansion joints. Any lineal variation in the beam lengths shall be placed at the fixed joint.

EXPANSION JOINT TREATMENT

Figure 3.5.7.4-1

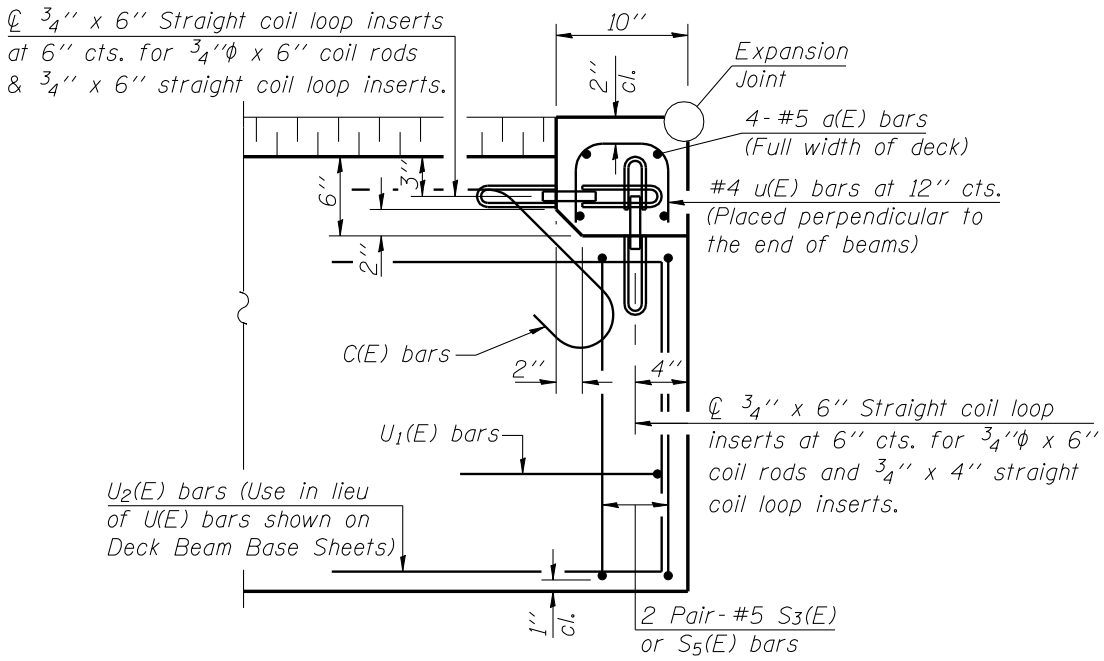

END OF BEAM (EXP. END)

(Dimensions are at Rt. L's)

Notes:

1½'' cl. for reinforcement bars unless otherwise noted.

Typical reinforcement not shown for clarity. See Deck Beam Base Sheets for additional reinforcement details.

Cost of Inserts & Coil Rods included with Precast Prestressed Concrete Deck Beams.

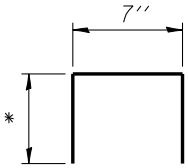

BAR u(E)

* Determined by Designer based on thickness of HMA and the clearances shown.

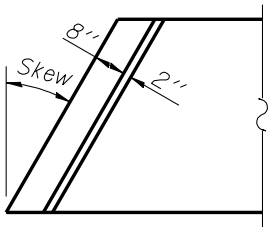

PLAN AT EXPANSION END OF BEAM

END OF DECK BEAM TREATMENT AT EXPANSION JOINT WITH HMA OVERLAY 17''-42'' BEAMS

Figure 3.5.7.4-2

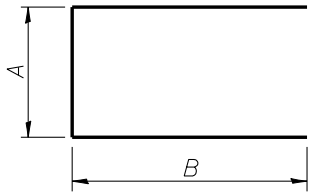

BARS $S_3(E)$, $S_5(E)$ & $U_2(E)$

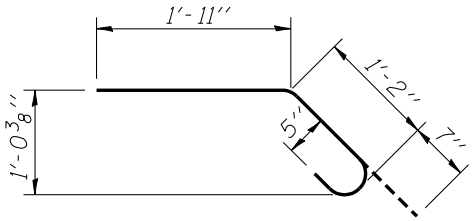

BAR C(E)

Beam Size	C(E) Bars		** $U_1(E)$ Bars		$U_2(E)$ Bar				$S_3(E)$ or $S_5(E)$ Bars			
	No.	Size	No.	Size	No.	Size	A	B	No.	Size	A	B
17" x 36"	5	#5	0	#5	4	#5	7 1/2"	2'-1"	4	#4	8 1/2"	*
17" x 48"	6	#5	0	#5	6	#5	7 1/2"	2'-1"	4	#4	8 1/2"	*
21" x 36"	5	#5	1	#5	4	#5	11 1/2"	2'-1"	4	#4	12 1/2"	*
21" x 48"	6	#5	1	#5	6	#5	11 1/2"	2'-1"	4	#4	12 1/2"	*
27" x 36"	5	#5	1	#5	4	#5	1'-5 1/2"	2'-1"	4	#4	1'-6 1/2"	*
27" x 48"	6	#5	1	#5	6	#5	1'-5 1/2"	2'-1"	4	#4	1'-6 1/2"	*
33" x 36"	5	#5	2	#5	4	#6	1'-11 1/2"	2'-1"	4	#4	2'-0 1/2"	*
33" x 48"	6	#5	2	#5	6	#6	1'-11 1/2"	2'-1"	4	#4	2'-0 1/2"	*
42" x 36"	5	#5	3	#5	4	#6	2'-8 1/2"	2'-1"	4	#4	2'-9 1/2"	*
42" x 48"	6	#5	3	#5	6	#6	2'-8 1/2"	2'-1"	4	#4	2'-9 1/2"	*

* Determined by Designer based on skew and required lap length.

** See Deck Beam Base Sheets for $U_1(E)$ bar details.

END OF DECK BEAM TREATMENT AT EXPANSION JOINT WITH HMA OVERLAY 17"-42" BEAMS

Figure 3.5.7.4-3

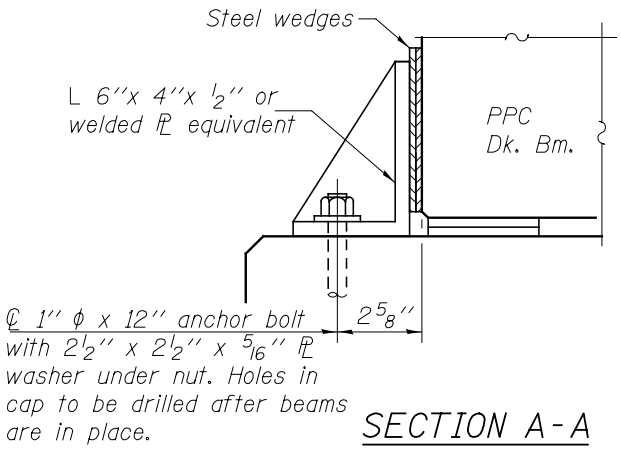

SECTION A-A

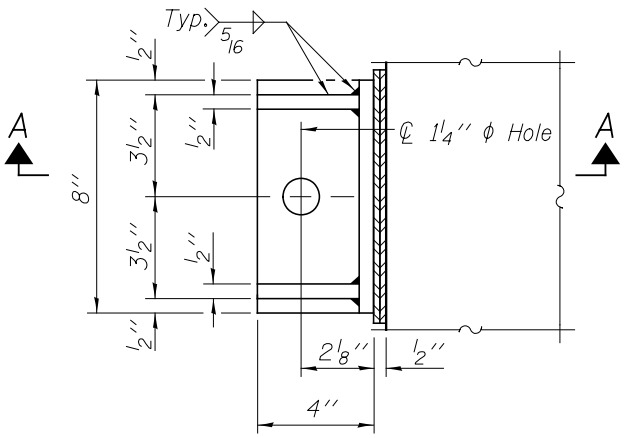

PLAN

Notes:

Cost of retainer and accessories are included with Precast Prestressed Concrete Deck Beams.

Equivalent rolled angle with stiffeners will be allowed in lieu of welded plates.

The side retainers shall be galvanized after shop fabrication according to AASHTO M 111 and ASTM 385.

Anchor bolts and plate washers shall be galvanized according to AASHTO M 232.

After the notch or concrete overlay are poured and cured, the steel wedges shall be removed. See Fig. 3.5.7.4-1 thru 3.5.7.4-3.

RETAINER ANGLE
AT EXPANSION JOINT

Figure 3.5.7.5-1

3.5.8 Railings

Section 2.3.6.1.7 states that the preferred bridge railing is the 34 inch F-Shape parapet and the preferred steel railing is the Type SM side mounted steel bridge railing (IDOT's R-34 label series) and therefore the deck beam base sheets with CWS have been detailed with these railings. Both of these railing are crashworthy for a Test Level 4 (TL-4) and are suitable for structures on the State system. The only exception to note is that the 11 inch deck beam is too shallow for the Type SM railing and therefore a 34 inch F-Shape parapet is required for 11 inch beams on the State system.

The deck beam base sheets with the HMA wearing surface are detailed with the Type SM (R-34) railing. The exception again is with the 11 inch deck beam which cannot use the F-shape parapet or the Type SM railing and therefore it is detailed with a Type T-1 railing with curb. This railing is crashworthy for a Test Level 2 (TL-2).

3.5.9 Miscellaneous Details

Figure 3.5.9-1 shows the general wearing surface profiles for CWS and HMA. The deck beam Design Guide 3.5 demonstrates how to calculate the camber so that the total anticipated wearing surface thickness on the beam ends may be determined and provided on the base sheets.

Figure 3.5.9-2 shows the standard shear key clamping detail which is used along stage construction lines to align and hold the two stages together so that the final stage-line shear key may be properly placed. Similar details of this Figure are available in the Detail Library and shall be placed in the contract plans of applicable projects.

Figure 3.5.9-3 shows how to determine the length of the deck beam end block for skews and for expansion joints.

Figure 3.5.9-4 provides guidance on the proper location, number and embedment depth of lifting loops required for a specific deck beam. Design Guide 3.5 demonstrates how to calculate the beam weight and determine the proper number of lifting loops. The Department funded a research product which produced the report entitled "Development of Standard for Lifting Loops in Precast Deck Beams". This report verified that the IDOT lifting loop data and details satisfies the requirements of PCI.

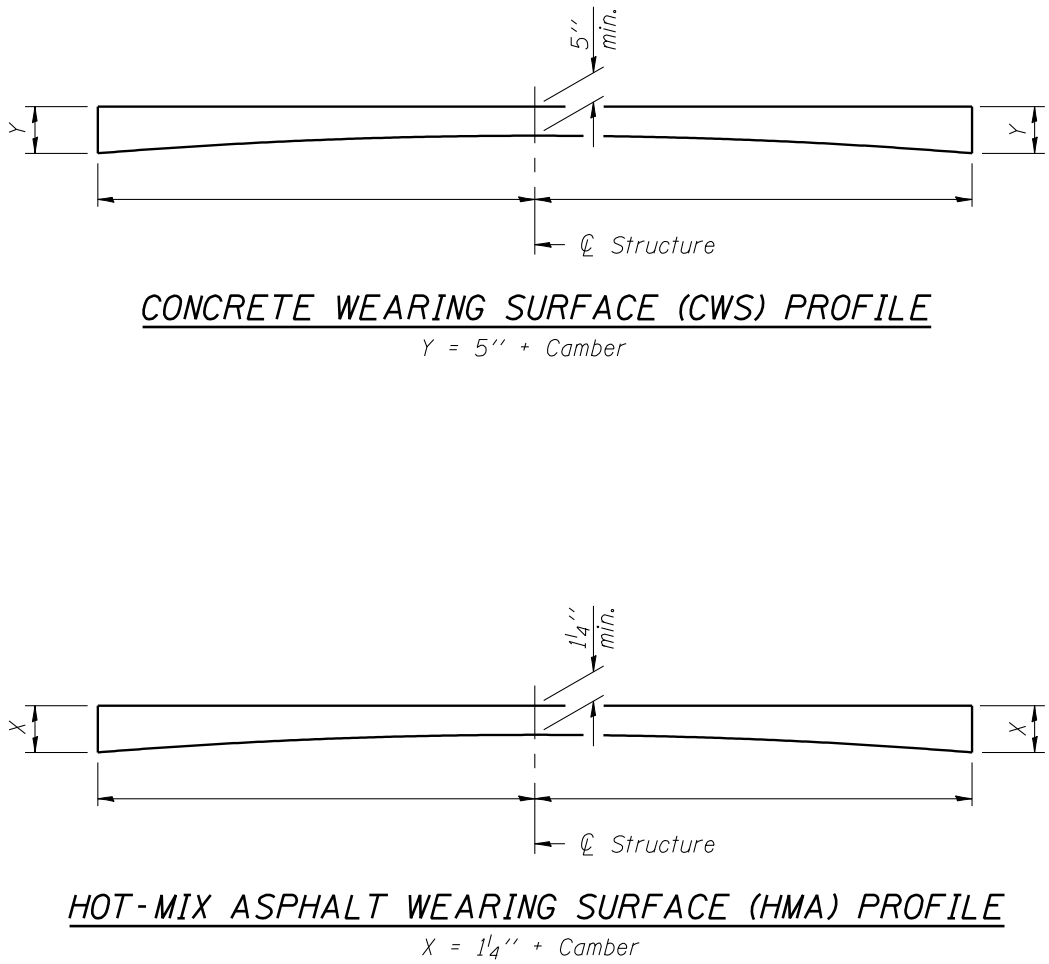

WEARING SURFACE PROFILES

Figure 3.5.9-1

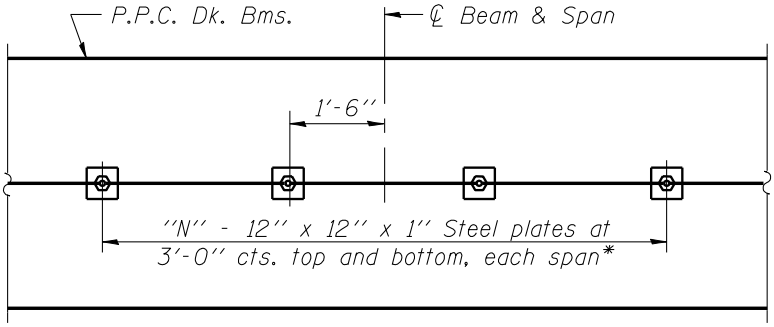

PLAN

* Space plates to miss temporary bridge rail posts. (Add where applicable)

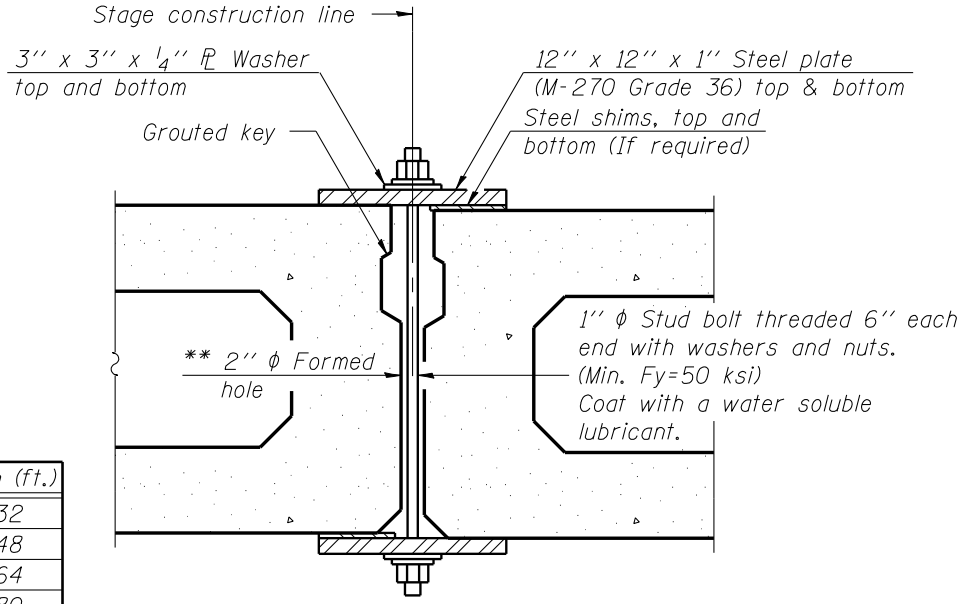

SECTION

N	Span (ft.)
4	≤32
6	≤48
8	≤64
10	≤80
12	>80

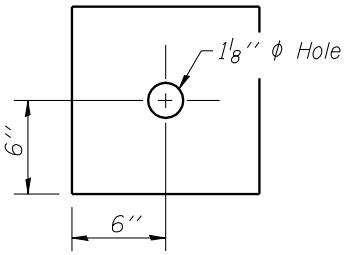

CLAMPING PLATE

** Cast semi-circular recesses in the sides of each beam adjacent to the stage construction line. These recesses should align to form a hole at the appropriate locations for the clamping device bolts.

Notes:
See Stage Construction Detail for traffic lanes.
Cost is included with Precast Prestressed Concrete Deck Beams.

SHEAR KEY CLAMPING DETAIL AT STAGE CONST. JOINT

Figure 3.5.9-2

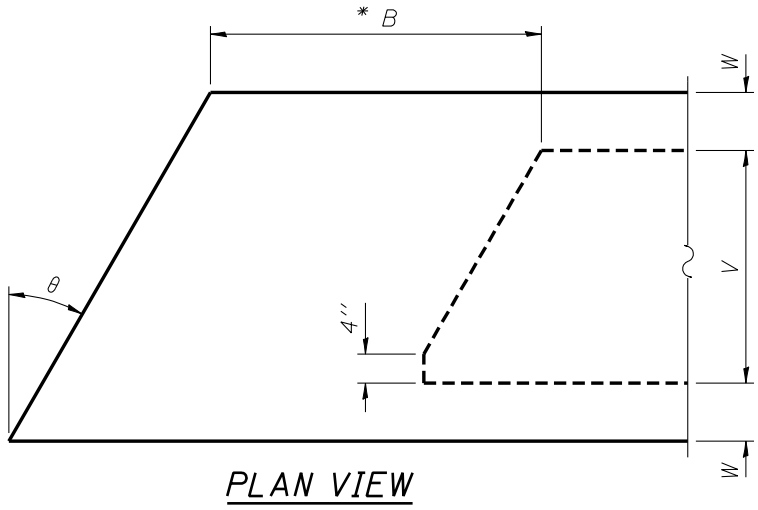

* Increase B by $\frac{10''}{\cos\theta}$ for beam ends that require an expansion joint notch. See Fig. 3.5.7.4-2.

DIMENSIONS TABLE

Beam	A (in.)	W (in.)	V (in.)
11x48 & 11x52	-	-	-
17x36	30	7	22
17x48	30	8	32
21x36	30	7	22
21x48	30	8	32
27x36	30	6	24
27x48	30	6	36
33x36	36	6	24
33x48	36	6	36
42x36	42	6	24
42x48	42	6	36

Note:
Dimension B, in inches, is the larger of the following equations:

$$B = \frac{A}{\cos\theta} - W(\tan\theta)$$

$$B = 27 + V(\tan\theta)$$

END BLOCK DETAILS

Figure 3.5.9-3

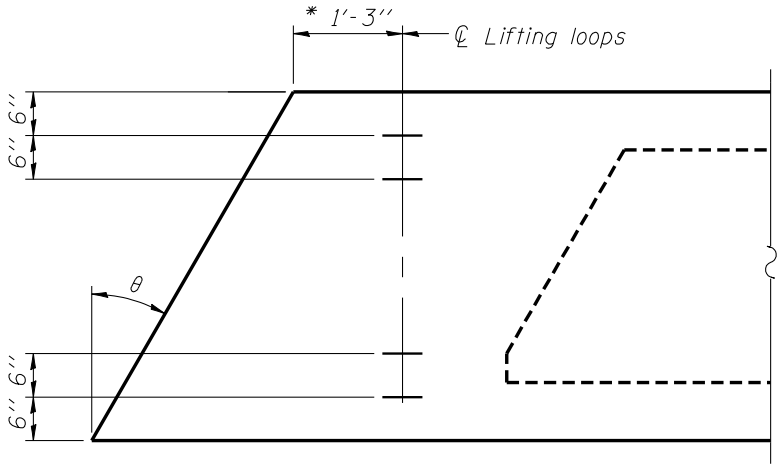

PLAN VIEW
(Showing lifting loop locations)

TABLE A

Beam	Net Weight (lbs/ft)	Solid Weight (lbs/ft)	D
11x48	-	535	7"
11x52	-	580	7"
17x36	492	621	1'-1"
17x48	642	834	1'-1"
21x36	550	771	1'-5"
21x48	708	1033	1'-5"
27x36	594	986	1'-11"
27x48	731	1323	1'-11"
33x36	669	1211	2'-5"
33x48	806	1623	2'-5"
42x36	781	1548	3'-2"
42x48	919	2073	3'-2"

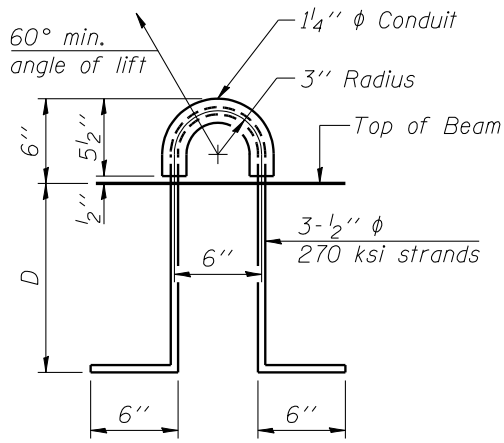

LIFTING LOOP DETAIL

TABLE B

No. of loops each end of beam	Gross wt. of beam (lbs)
** 2	60000
4	120000

* For beam ends that require a notch for the expansion joint, see Fig. 3.5.7.4-2 increase this length by $\frac{10''}{\cos\theta}$

** Use outermost lifting loop locations.

Note:

Table A provides the lifting loop embedment depth and the weights of the net and solid sections of the beam used to calculate the gross weight of the beam.

Table B shows the number of lifting loops required at each end of the beam.

LIFTING LOOP
FOR DECK BEAMS

Figure 3.5.9-4

3.6 Expansion Devices

LRFD and LFD

3.6.1 Expansion Joint Limitations

The type of expansion device to be used on a bridge deck depends upon the contributing expansion length for which the device is provided and the skew angle of the opening. The temperature range for LRFD and LFD designs shall be -30° F to 130° F with a normal installation temperature of 50° F. For design purpose, the coefficient of linear expansion shall be 0.0000065/° F for steel and concrete structures.

Figure 2.3.6.1.6-1 sets the limitations for sealed expansion joints, which includes strip seals, finger plate joints with troughs, and modular joints.

3.6.2 Sealed Expansion Joints

All expansion joints shall be sealed to prevent deck drainage from penetrating the bridge deck joint openings.

3.6.2.1 Strip Seal Joints

Strip seals for expansion joints are detailed in Figures 3.6.2.1-1 to 3.6.2.1-4. A point block detail with a sliding plate at parapets shown in Figure 3.6.2.1-5 shall be included with this joint type for structures with skews over 30°. See Figure 2.3.6.1.6-1. The strip seal joint presented in Figure 3.6.2.1-4 is only intended for PPC deck beam bridges with concrete overlays.

The strip seal bridge joint system shall be used for structures with contributing expansion lengths less than or equal to 280 ft. with skews equal to 0°, reduced to 160 ft. at a skew of 60°. The joint opening at 50° F ensures that the opening at the minimum temperature will not exceed 4 in. in the direction of travel according to AASHTO LRFD Article 14.5.3.2. It also ensures that at the maximum temperature, the opening does not close to less than ½ in. at right angles to the edge rails. In addition, the opening shall not be less than 1 ½ inches at right angles to the edge rails at 50° F to ensure the seal can be installed. This restriction should only affect smaller expansion lengths, larger skews, or a combination thereof. The joint opening less ½ in. (a safety factor which

accounts for the 1.2 load factor in LRFD Table 3.4.1-1) "A" (See Figure 3.6.2.1-1), shall be calculated according to the following formula.

$$\text{"A" (in.)} = \left[L\,(\text{ft.}) \times 80\,(^\circ\text{F}) \times 12\,(\text{in}/\text{ft.}) \times 0.0000065 / (^\circ\text{F}) \right] \times \cos(\text{skew})$$

See Base Sheet EJ-SSJ for details of the expansion strip seal joints.

Joint openings and geometry details for the Rolled Rail Strip Seal Joint shall be dimensioned on the superstructure sheets. When Strip Seal Joints are used at fixed bearing locations, the opening dimension shall be 1 ½". The following note shall be placed with the superstructure sheets to alert the contractor of potential dimensional revisions:

> *Dimensions are based on a Rolled Rail Strip Seal Joint. If the Contractor elects to use the Welded Rail Strip Seal Joint, deck dimensions may require adjustments to satisfy the details on Base Sheet EJ-SSJ.*

3.6.2.2 Finger Plate Expansion Joint with Trough

Finger plate expansion joints may be used when the limits for strip seal expansion joints are exceeded. The design of finger plates is governed by two basic parameters:

1. Expansion length
2. Live load plus impact

A 16 kip wheel load with an impact factor of 1.75 for LRFD and 1.3 for LFD shall be uniformly distributed and applied equally to the fingers for only one side of the joint within a 20 in. design width. The maximum distribution length shall be 10 in. For fingers over 10 in. in length, the distribution shall start at the free end of the finger.

Figure 3.6.2.2-1 assists the designer in determining some of the basic geometry of a finger plate expansion joint, including the finger length. Figure 3.6.2.2-2 provides the required finger thickness and weld length for various design finger lengths. The design parameters included in Figure 3.6.2.2-2 are:

1. Minimum finger length = 6 ¼ in.
2. Maximum finger length = 14 in.
3. Skew range of 0° to 60°.
4. Finger radius = ⅞ in.
5. Finger to stool fillet weld = $\frac{5}{16}$ in.
6. AASHTO M270 Grade 50 steel (NTR) or Grade 50W steel (NTR) shall be used throughout the finger plate joint.
7. Fatigue. Assume category A for the fingers, category C for the stool welds.
   a. LRFD 6.6.1.2.5 Assuming a 35 year design life, 5 cycles per truck.
   b. LFD 10.3 Fatigue Case 1 for 2 million + cycles.
8. $\frac{3}{8}$ in. ≤ stool web thickness ≤ ½ in.
9. Three ¾ in. ϕ studs shall be evenly spaced between stools and connected 2 in. from the back end of the finger plate.
10. Maximum stool spacing between stringers = 2 ft. – 0 in.

Figures 3.6.2.2-3 through 3.6.2.2-10 show additional details for finger plate expansion joints with troughs. Adequate elevations and dimensions shall be furnished on the plans to guide fabricators in detailing the stools, apron plates, and trough support plates.

When a finger plate expansion joint intersects a concrete median or a sidewalk, the finger plate joint shall continue through at the top of bridge deck elevation. The median or sidewalk shall be gapped as necessary for the joint. The gap shall be covered with sliding plates similar to the details shown in Figure 3.6.2.2-9 for spanning the gap in the parapet. The exposed surface of the top sliding plate on a sidewalk shall be textured. The trough shall be continuous under sidewalks and medians and terminate as illustrated in Figures 3.6.2.2-5 and 3.6.2.2-8.

Finger plates should not be used on structures with significantly curved girders (radius < 2000 ft.). When finger plate expansion joints are appropriate for curved structures, the finger joint should be oriented such that the finger expansion is placed along the chord extending from the expansion joint to the fixed substructure.

Joints with finger lengths greater than 14 in. require modular or special expansion joint designs beyond those detailed in this manual. The Bureau of Bridges and Structures should be consulted to verify the viability and acceptability of any proposed special joint design.

Finger plate expansion joints are paid for per ft. furnished according to Article 520.13 of the Standard Specifications.

3.6.2.3 Modular Joints

A modular joint is basically a series of strip seals supported by rails and support bars to form a joint system capable of accommodating movements from 3 ⅛ to 15 in. This system may be used in lieu of a fingerplate and trough system. A hybrid (swivel) modular joint system designed to accommodate differential non-parallel longitudinal movements shall be used for skews greater than 60°, when lateral loadings are large, for flared superstructures, or to account for the effects of curvature. A Guide Bridge Special Provision was developed for and shall be used with this type of expansion joint.

Some basic details for modular joints are shown in Figure 3.6.2.3-1.

3.6.3 Sealed Fixed Joints

A strip seal for a fixed joint is detailed the same as presented in Figures 3.6.2.1-1 to 3.6.2.1-5 with the exception that the minimum opening shall be set at 1 ½ in. at all temperatures for installation purposes as noted on the appropriate figures. There is no upper skew limitation for fixed joints, however it shall be placed along the skew out-to-out of the deck.

Base Sheet EJ-SSJ also depicts the fixed strip seal joint.

3.6.4 Substructure Treatments

The substructure elements under expansion joints shall be protected by an application of Concrete Sealer as an additional protective treatment for the epoxy coated reinforcement. See Sections 3.8.1 and 3.9.1 for more information.

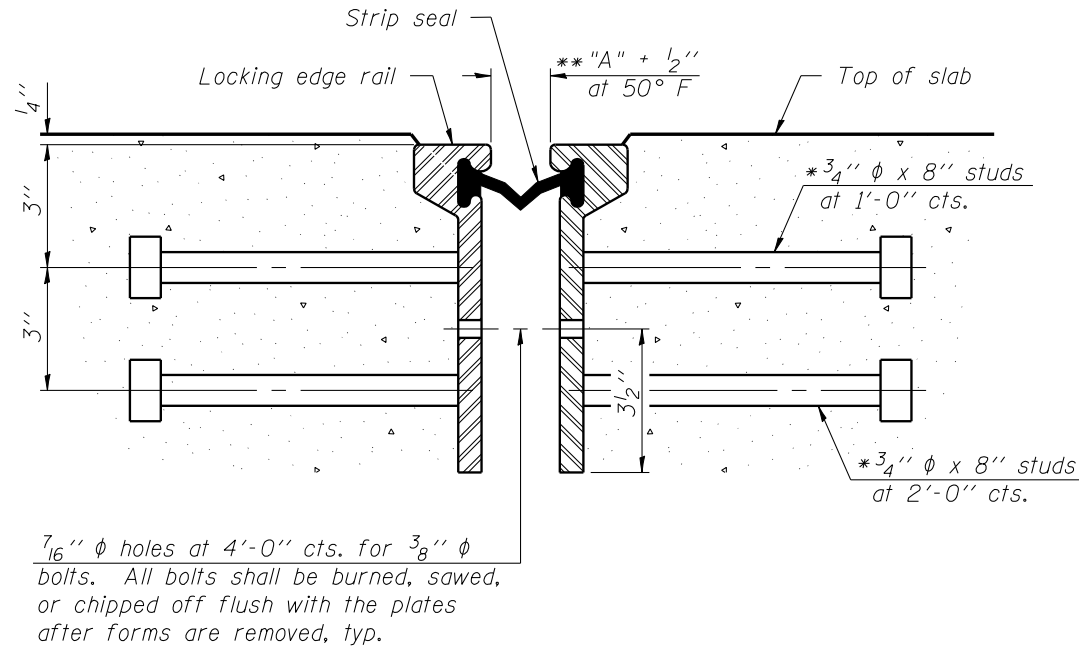

SECTION THRU ROLLED RAIL EXP. JOINT

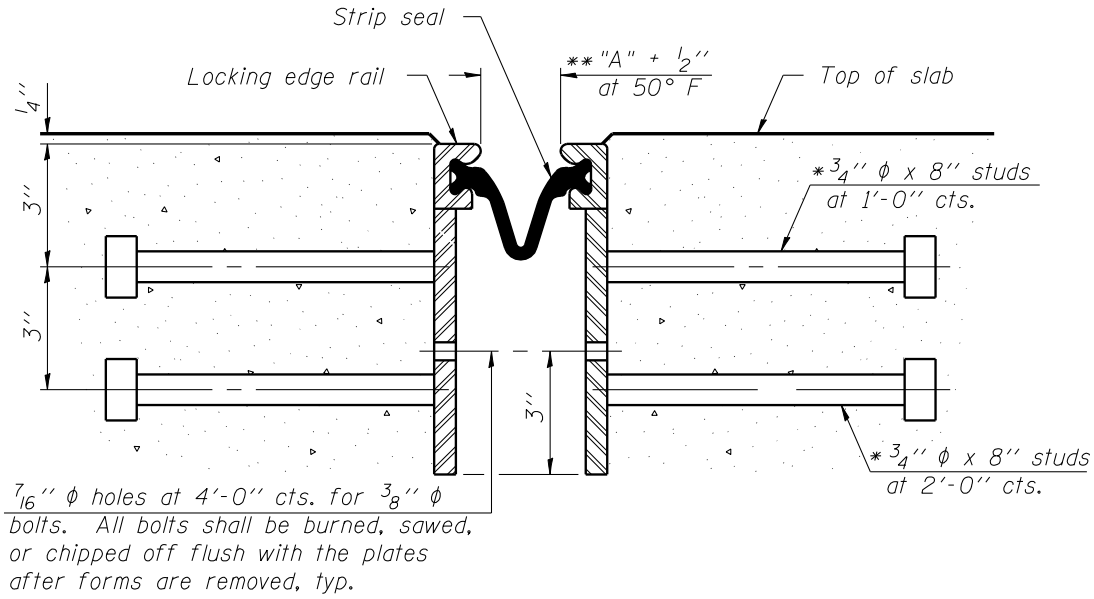

SECTION THRU WELDED RAIL EXP. JOINT

* Granular or solid flux filled headed studs conforming to Article 1006.32 of the Std. Specs., automatically end welded.

** See 3.6.2.1 for determination of "A". The minimum dimension shall be 1 1/2" for installation purposes.

STRIP SEAL
EXPANSION JOINT

Figure 3.6.2.1-1

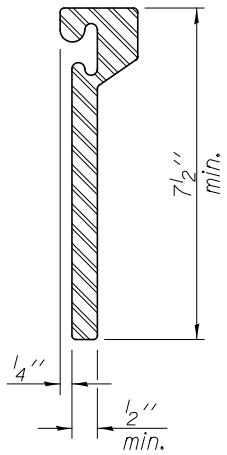

ROLLED (EXTRUDED) RAIL

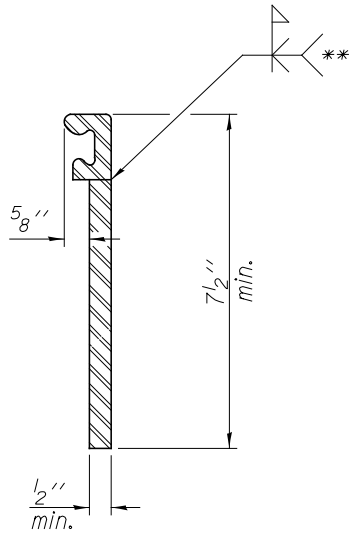

WELDED RAIL

LOCKING EDGE RAILS

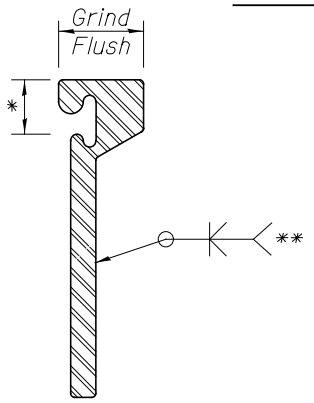

LOCKING EDGE RAIL SPLICE

The inside of the locking edge rail groove shall be free of weld residue.

Rolled rail shown, welded rail similar.

Notes:

The strip seal shall be made continuous and shall have a minimum thickness of 1/4". The configuration of the strip seal shall match the configuration of the Locking Edge Rails.

The height and thickness of the Locking Edge Rails shown are minimum dimensions. The actual configuration of the Locking Edge Rails and matching strip seal may vary from manufacturer to manufacturer. Flanged edge rails will not be allowed. Locking Edge Rails may be spliced at slope discontinuities.

The manufacturer's recommended installation methods shall be followed.

All steel components shall be galvanized after fabrication according to Article 520.03 of the Standard Specifications.

Maximum space between rail segments at stage lines shall be 3/16", sealed with a suitable sealant.

* Omit weld at seal opening.

** Back gouge not required if complete joint penetration is verified by mock-up.

STRIP SEAL EXPANSION JOINT

Figure 3.6.2.1-2

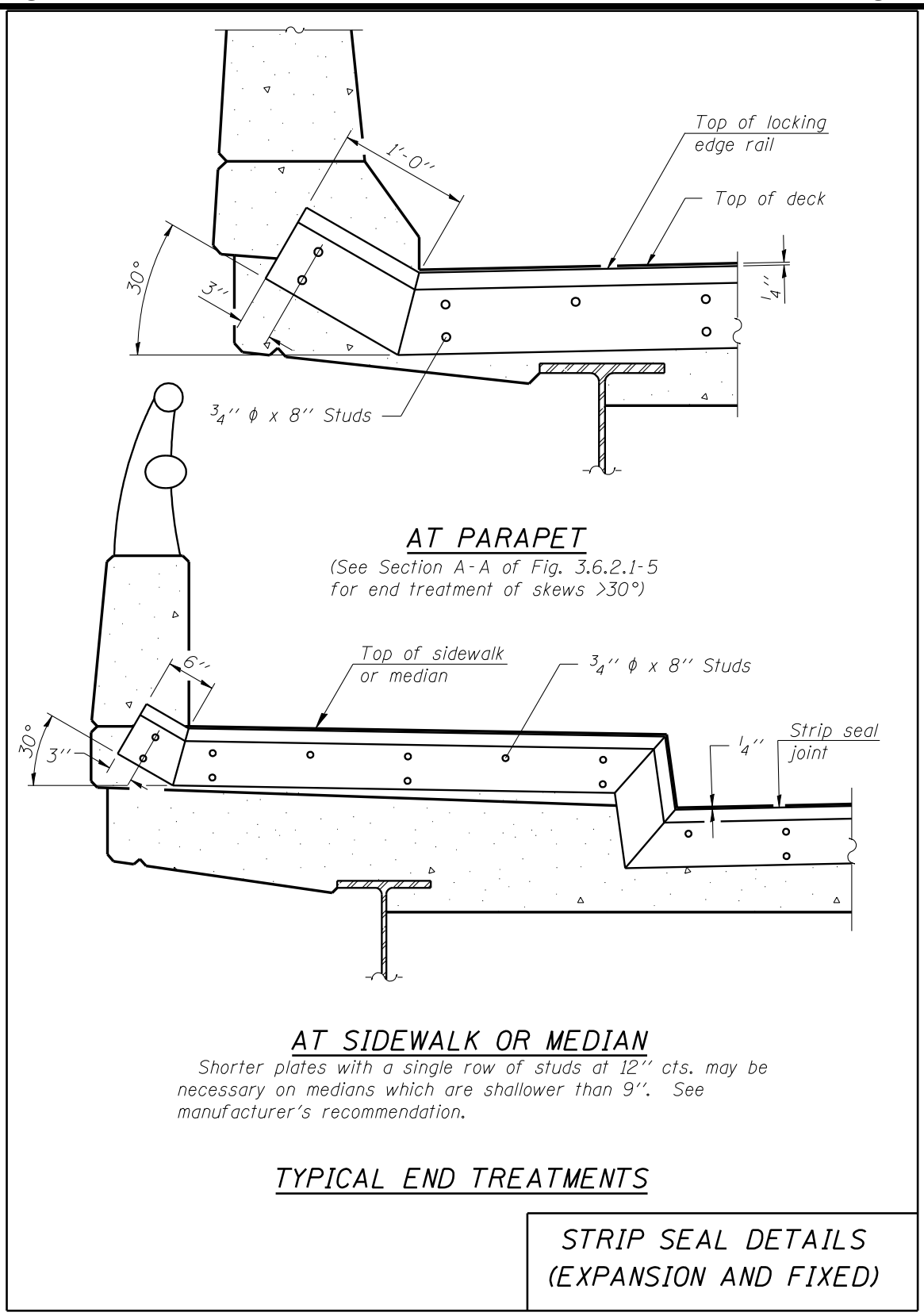

Figure 3.6.2.1-3

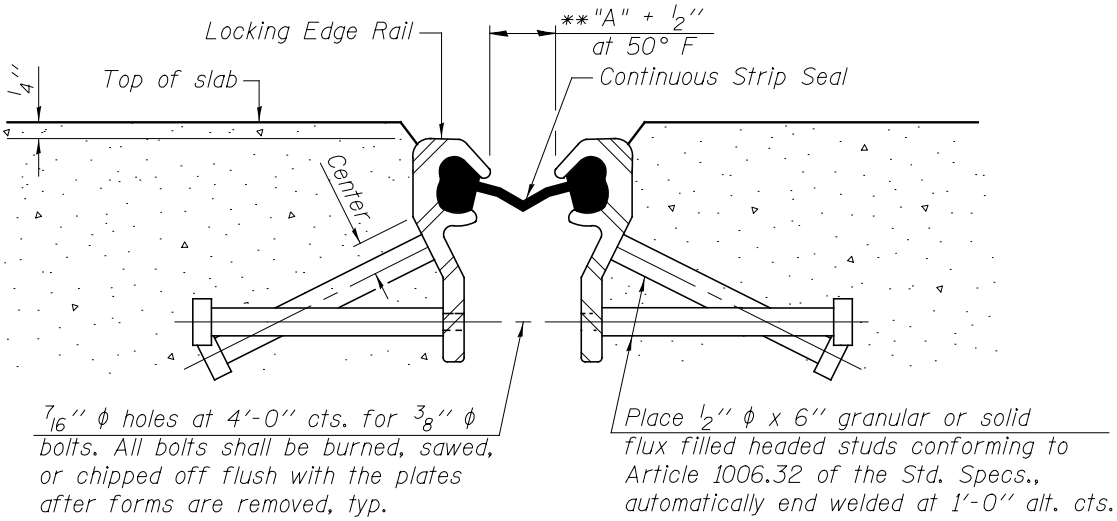

SECTION THRU EXPANSION STRIP SEAL JOINT

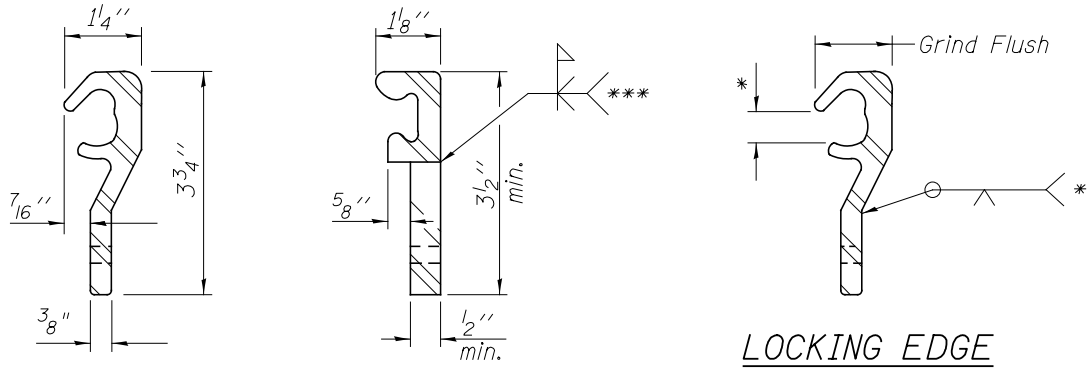

ROLLED (EXTRUDED) RAIL

WELDED RAIL

LOCKING EDGE RAIL

LOCKING EDGE RAIL SPLICE

Rolled rail shown, welded rail similar.

Notes:

The strip seal shall be made continuous and shall have a minimum thickness of 1/4".

The configuration of the strip seal shall match the configuration of the Locking Edge Rails.

The height and thickness of the Locking Edge Rails shown are minimum dimensions. The actual configuration of the Locking Edge Rails and matching strip seal may vary from manufacturer to manufacturer. Flanged edge rails will not be allowed.

The inside of the Locking Edge Rail groove shall be free of weld residue.

Locking Edge Rails may be spliced at slope discontinuities and stage construction joints.

The manufacturer's recommended installation methods shall be followed.

All steel components shall be galvanized after fabrication according to Article 520.03 of the Standard Specifications.

Maximum space between rail segments at stage lines shall be 3/16", sealed with a suitable sealant.

* Omit weld at seal opening.

** The minimum dimension shall be 1 1/2" for installation purposes.

*** Back gouge not required if complete joint penetration is verified by mock-up.

STRIP SEAL JOINTS FOR WEARING SURFACE OVER DECK BEAM

Figure 3.6.2.1-4

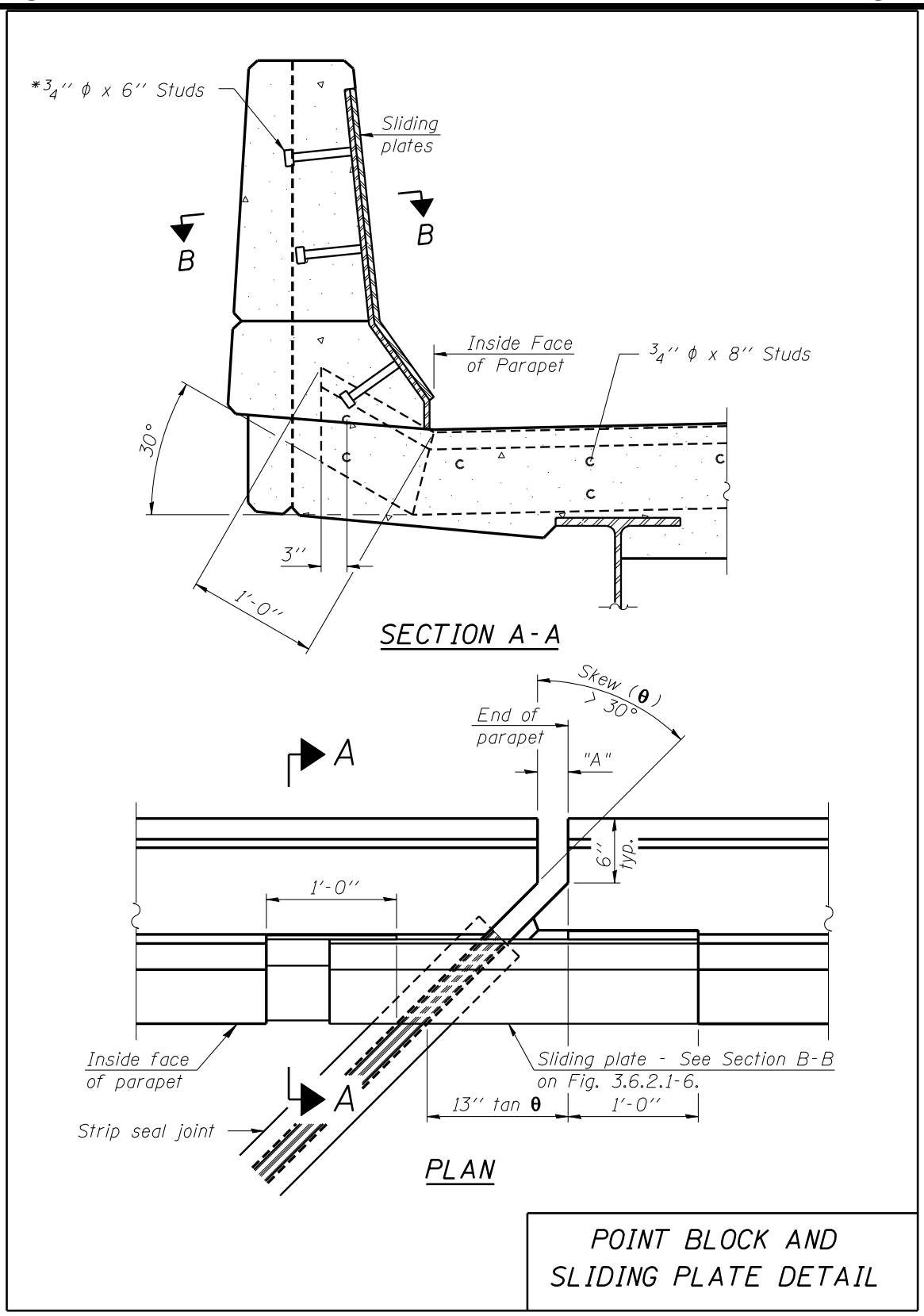

Figure 3.6.2.1-5

* Granular or solid flux filled headed studs conforming to Article 1006.32 of the Std. Specs., automatically end welded.

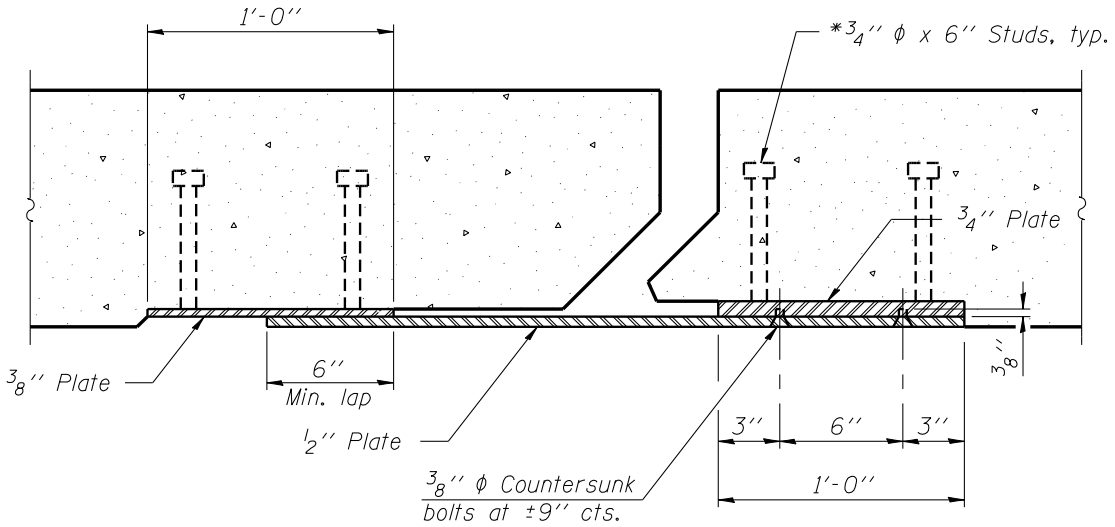

SECTION B-B

POINT BLOCK AND SLIDING PLATE DETAIL

Figure 3.6.2.1-6

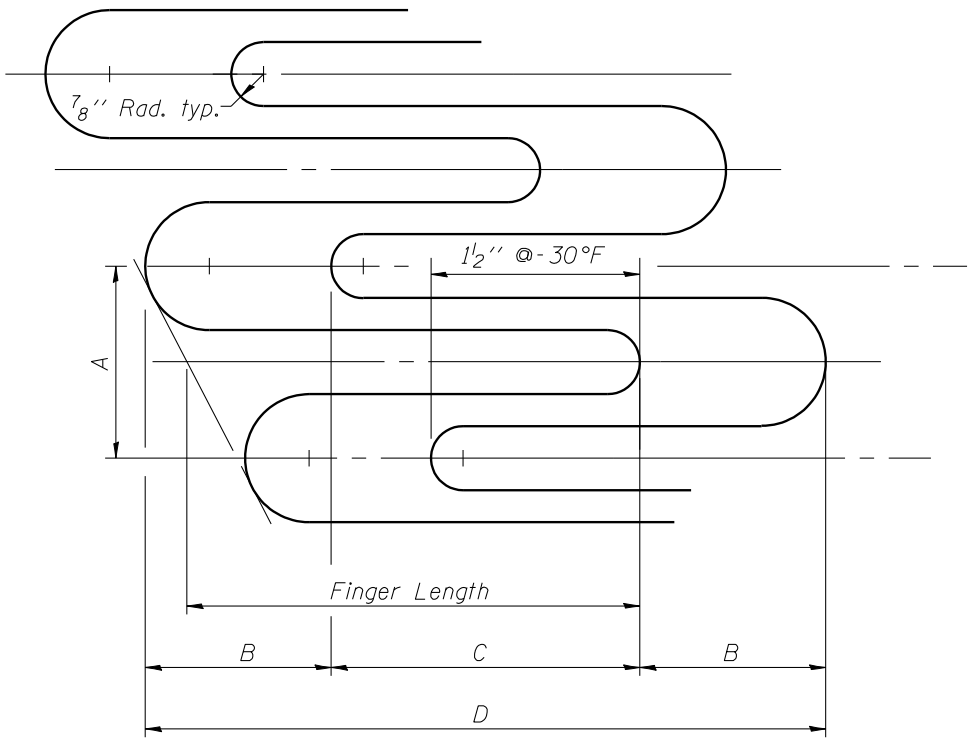

JOINT OPENING AND GEOMETRY DETAIL

Notes:

A = 4'' for skew ≤ 5°
A = 4 1/4'' for skew > 5°
B = Exp. + 3/4'' @ Normal Temp.
C = Exp. @ Normal Temp. + 1 1/2'' + A (Tan skew)
D = 2B+C
Finger Length = B + C - A/2 (Tan skew)

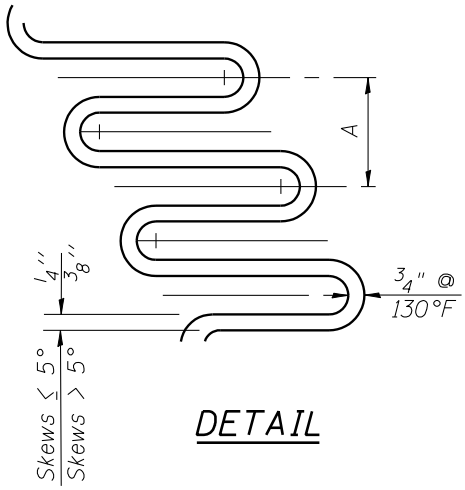

DETAIL

FINGER PLATE DIMENSIONS

Figure 3.6.2.2-1

Finger Length (in.)	Finger Thickness (in.)	Weld Length (in.) each side of stool
5.0	1.0	5.75
5.25	1.125	6.25
5.5	1.125	6.75
5.75	1.25	7.0
6.0	1.25	7.5
6.25	1.375	7.75
6.5	1.375	8.25
6.75	1.5	8.75
7.0	1.5	9.25
7.25	1.625	9.5
7.5	1.625	9.75
7.75	1.625	10.25
8.0	1.75	10.5
8.25	1.75	10.75
8.5	1.875	11.25
8.75	1.875	11.5
9.0	2.0	11.75
9.25	2.0	12.0
9.5	2.125	12.25
9.75	2.125	12.5
10.0	2.25	12.75
10.25	2.25	13.0
10.5	2.375	13.25
10.75	2.375	13.5
11.0	2.5	13.75
11.25	2.5	14.0
11.5	2.75	14.25
11.75	2.75	14.5
12.0	2.75	14.75
12.25	2.75	15.0
12.5	3.0	15.25
12.75	3.0	15.25
13.0	3.0	15.5
13.25	3.0	15.75
13.5	3.0	15.75
13.75	3.25	16.0
14.0	3.25	16.0

FINGER PLATE
DESIGN TABLE

Figure 3.6.2.2-2

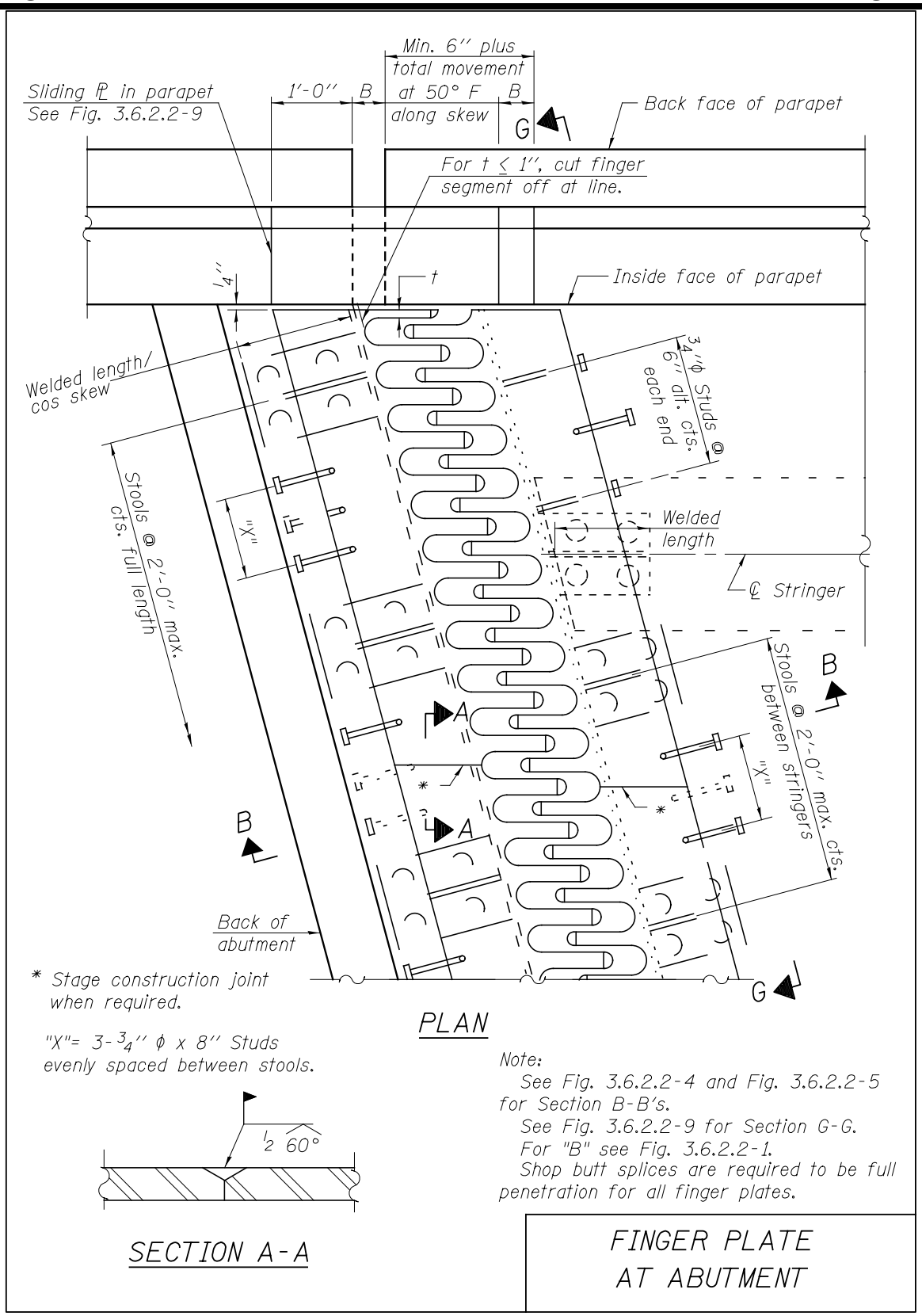

Figure 3.6.2.2-3

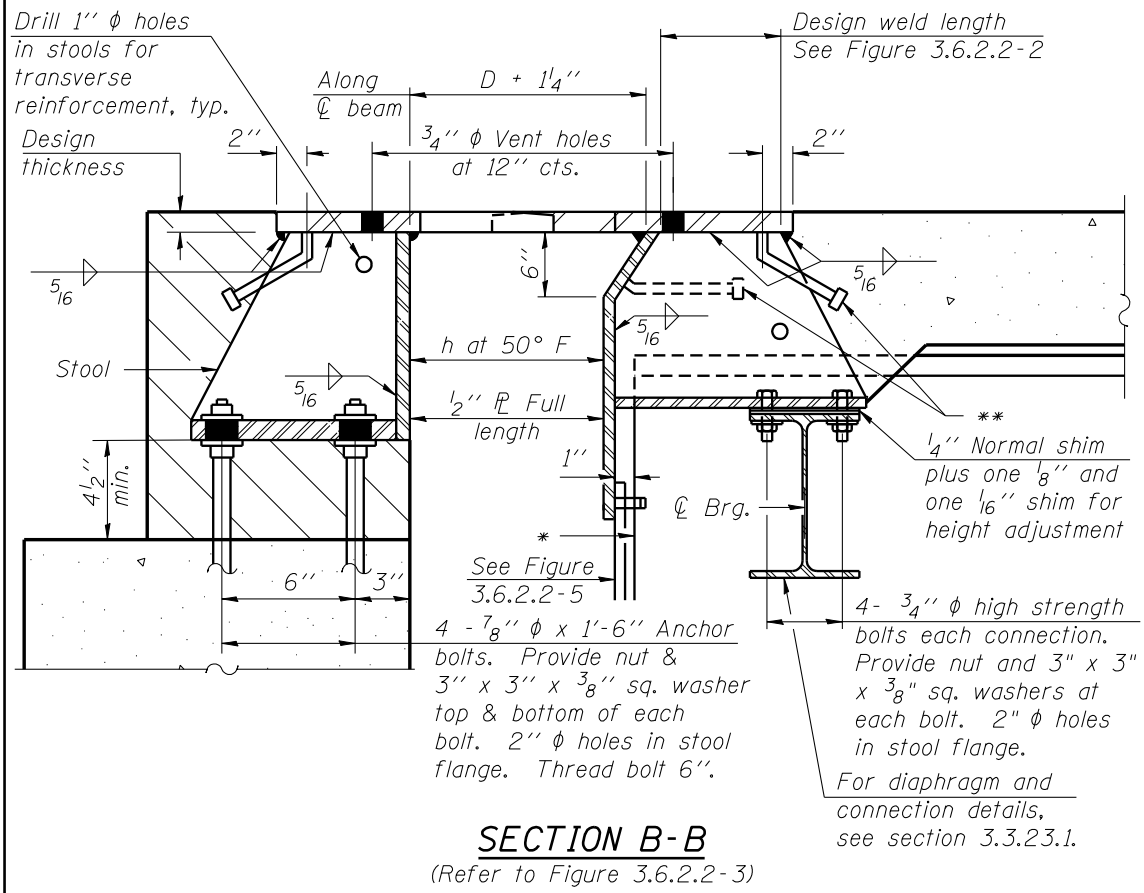

SECTION B-B

(Refer to Figure 3.6.2.2-3)

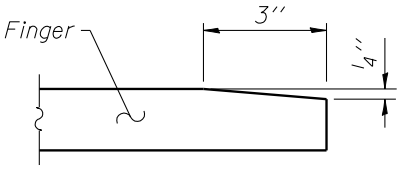

BEVEL DETAIL

* Cut end of beam parallel to skew.

** ¾'' ϕ x 8'' Granular or solid flux filled headed studs conforming to Art. 1006.32 of the Std. Specifications.

Notes

For "D", see Fig. 3.6.2.2-1.

Hatched area to be poured after expansion assembly has been adjusted. Reinforce as shown in Figure 3.8.12-1.

h = 3'' plus (Exp x cos skew)

FINGER PLATE AT ABUTMENT

Figure 3.6.2.2-4

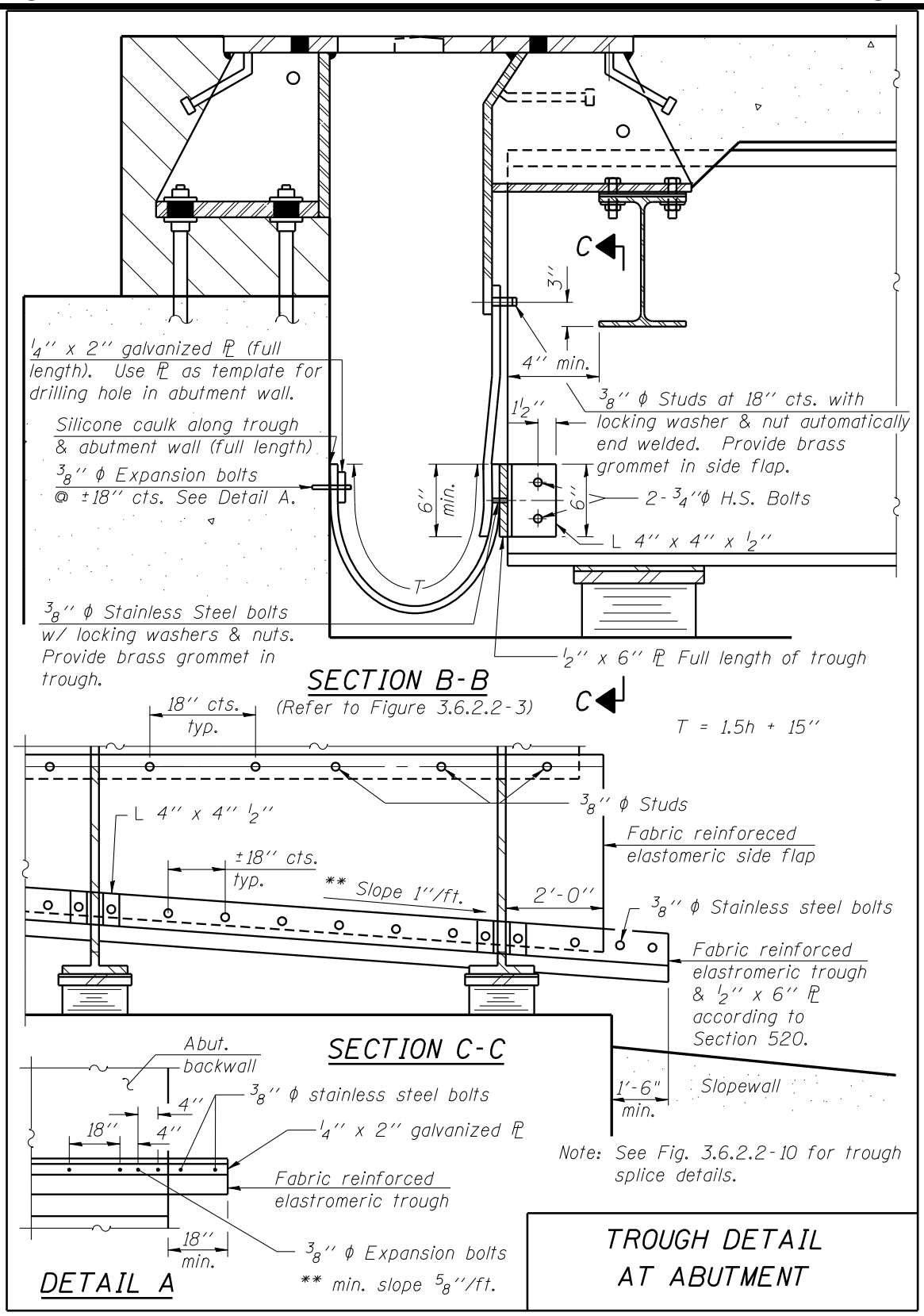

Figure 3.6.2.2-5

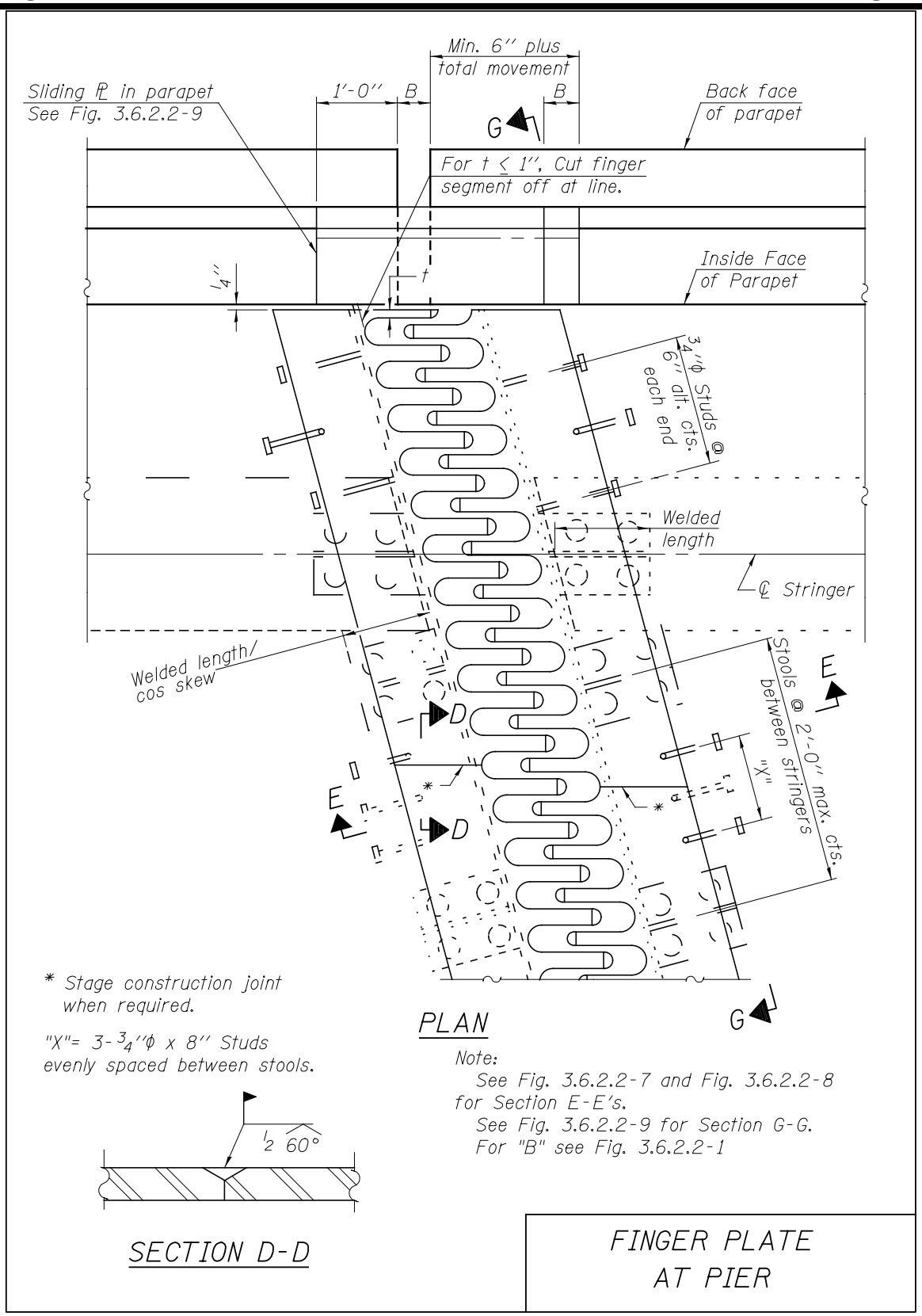

Figure 3.6.2.2-6

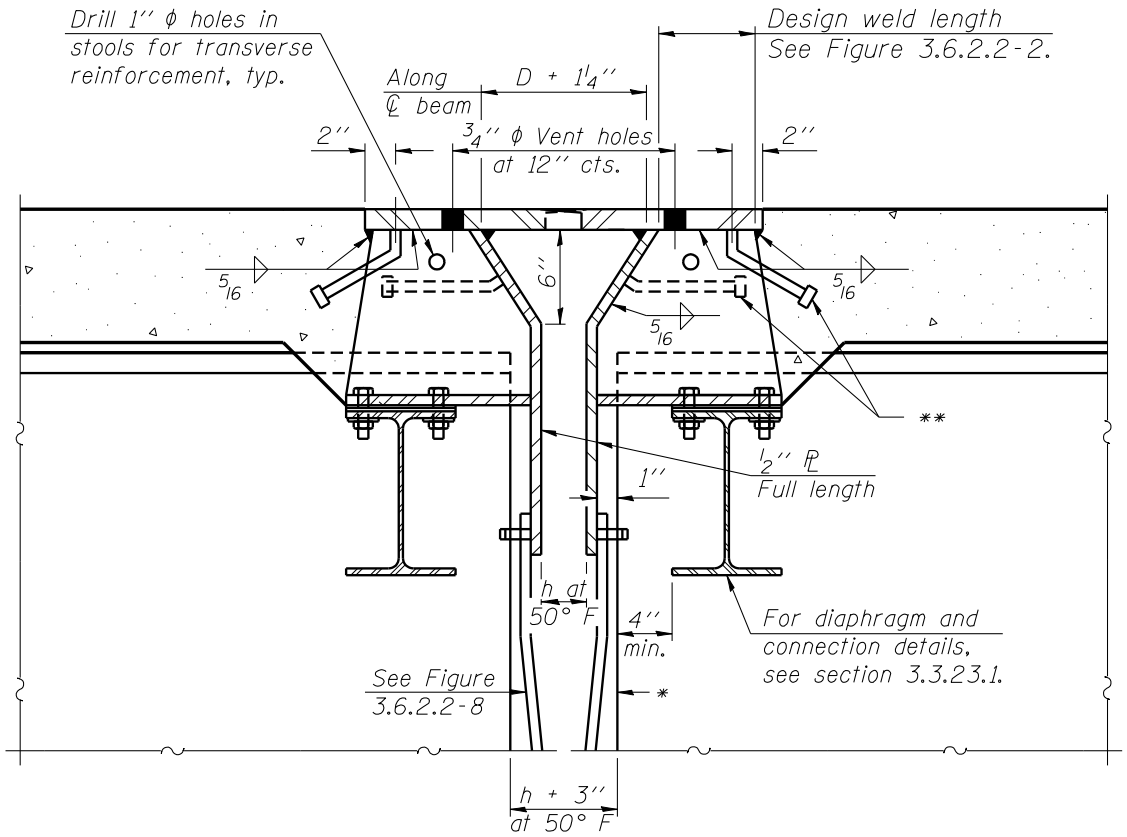

SECTION E-E

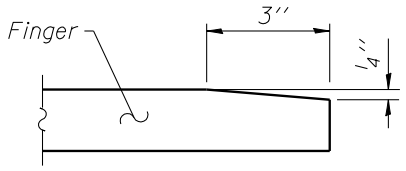

BEVEL DETAIL

* Cut end of beam parallel to skew.

** ¾'' ϕ x 8'' Granular or solid flux filled headed studs conforming to Art. 1006.32 of the Std. Specifications.

Notes
For "D", see Fig. 3.6.2.2-1.
h = 3'' plus (Exp x cos skew)

FINGER PLATE AT PIER

Figure 3.6.2.2-7

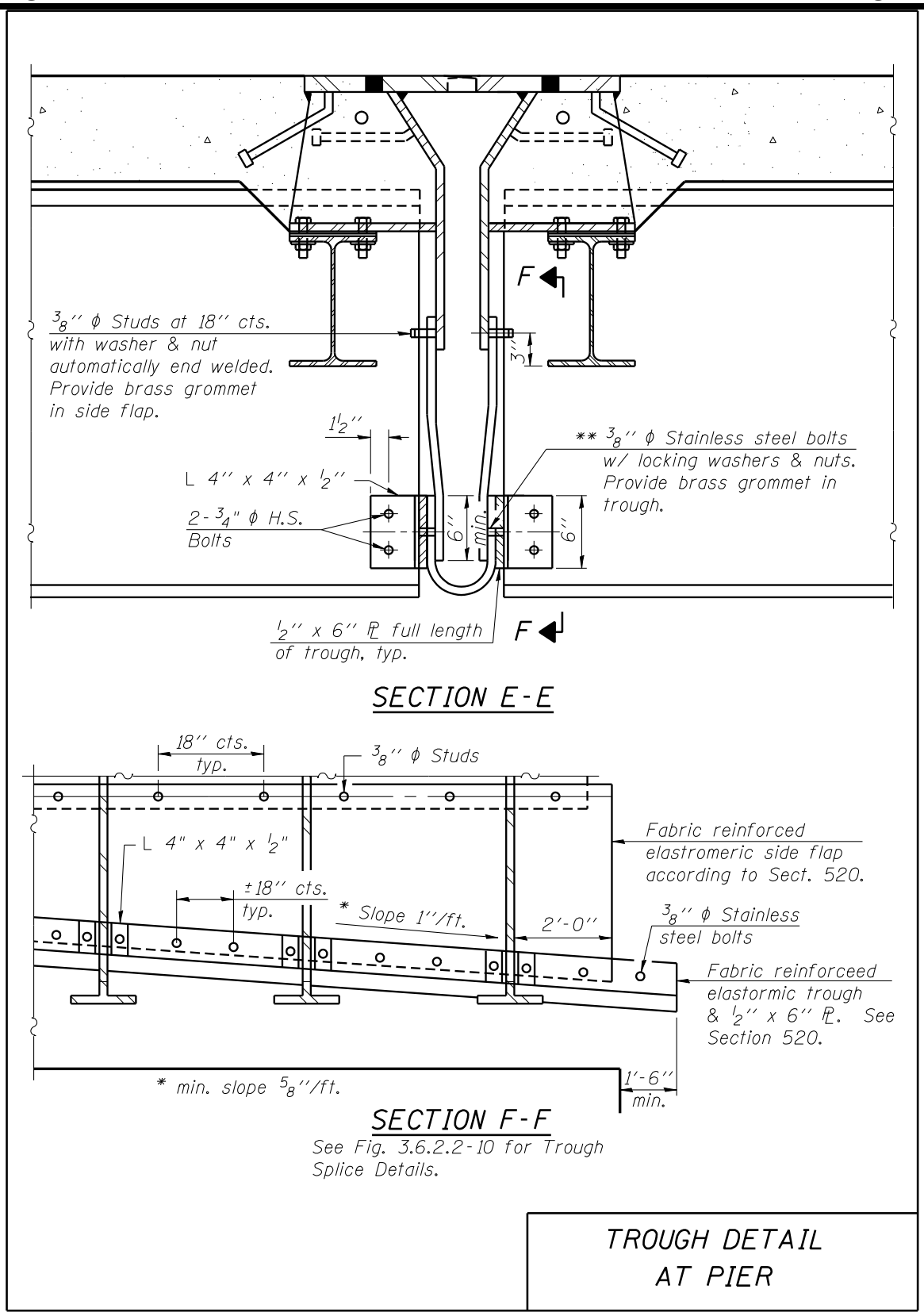

Figure 3.6.2.2-8

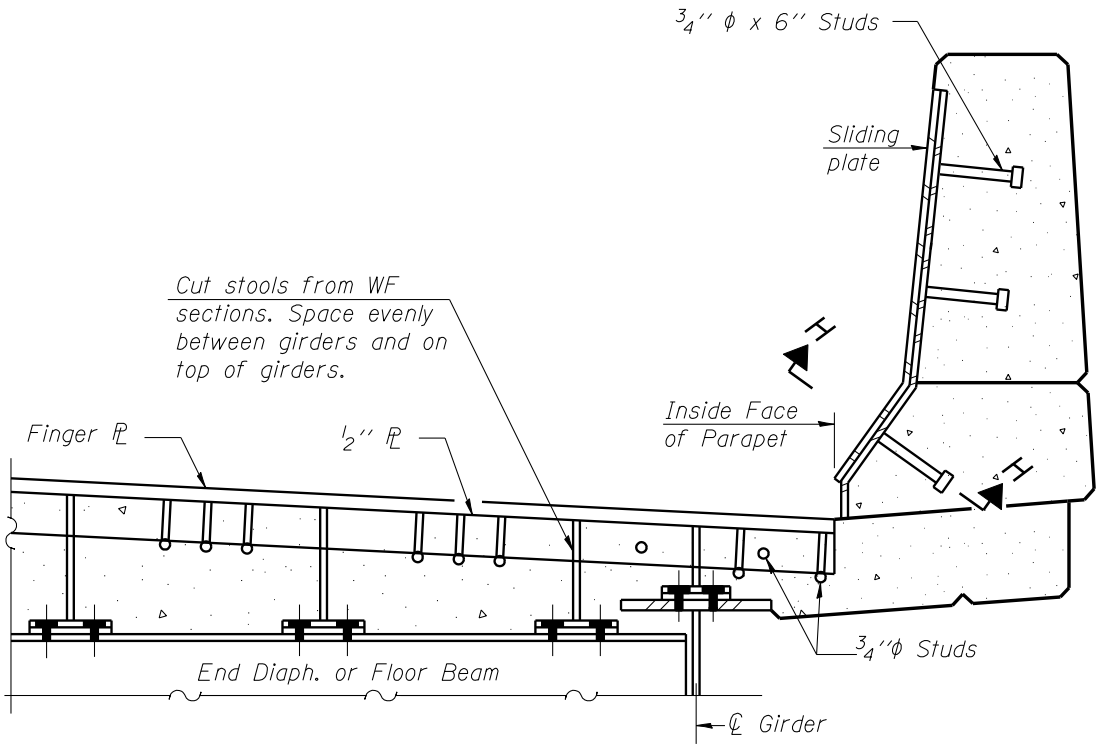

SECTION G-G

(Refer to Figures 3.6.2.2-3 or 3.6.2.2-6)

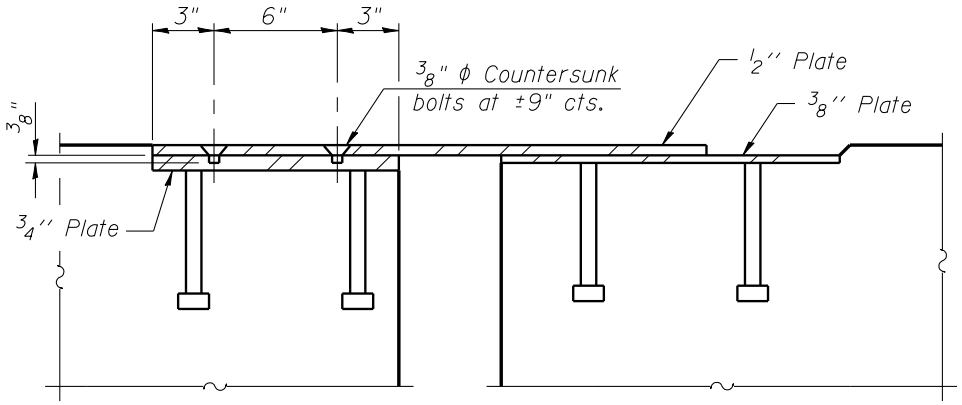

SECTION H-H

FINGER PLATE AND SLIDING PLATE DETAILS

Figure 3.6.2.2-9

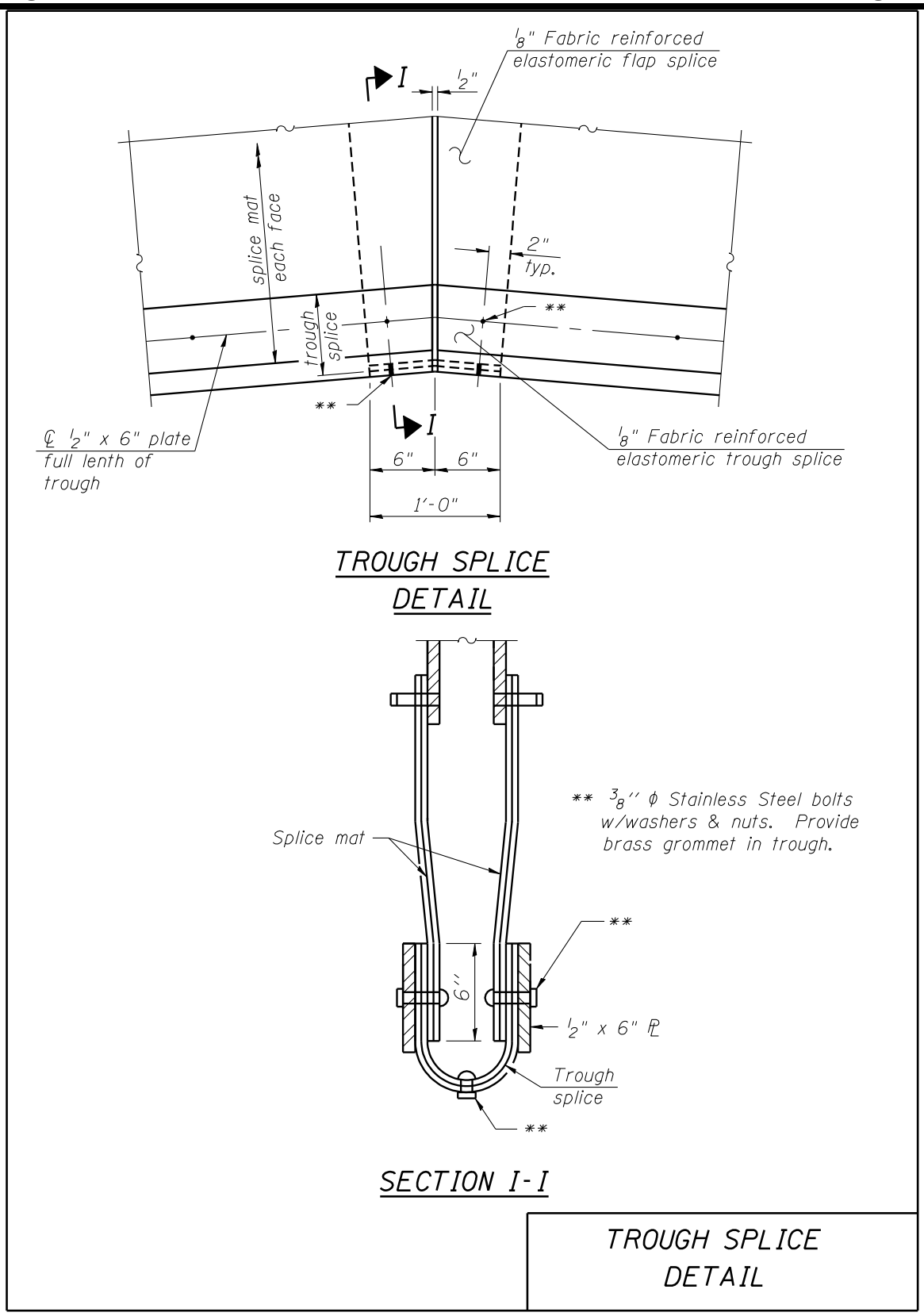

Figure 3.6.2.2-10

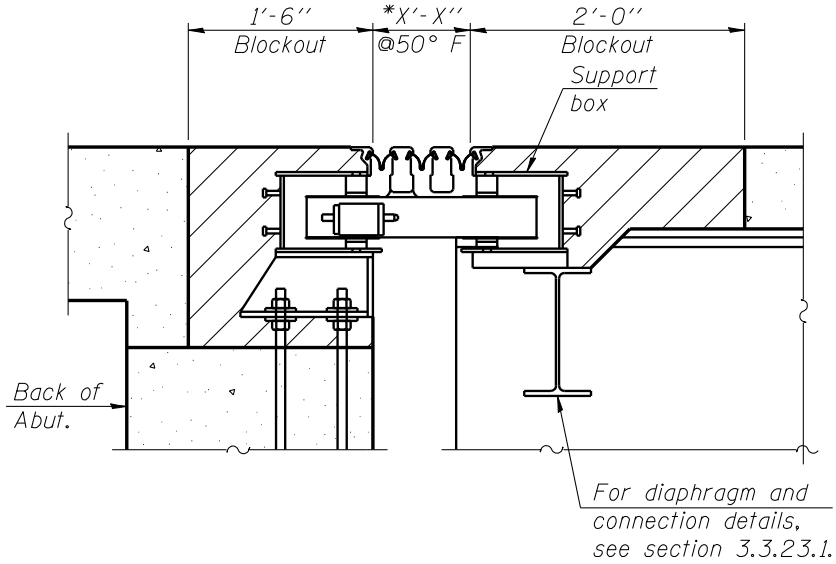

JOINT AT ABUTMENT

* Number of rails determined by manufacturer.

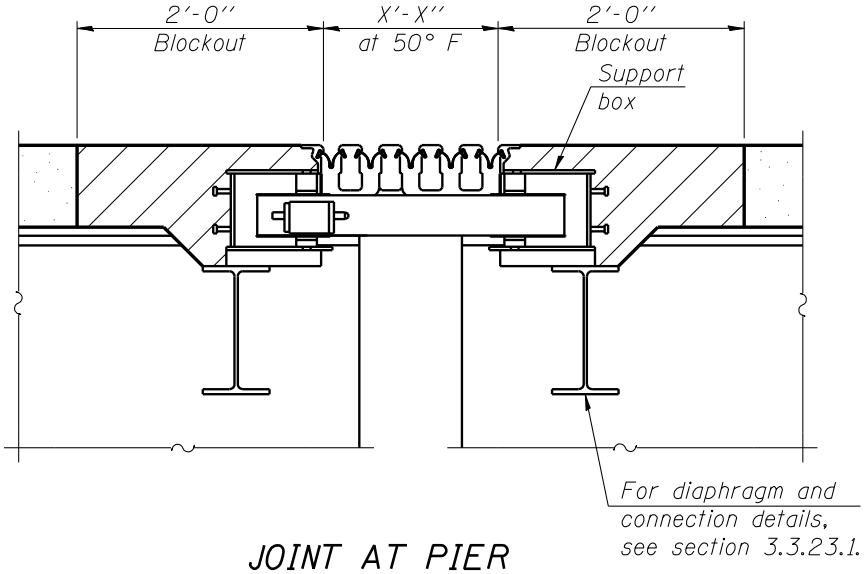

JOINT AT PIER

Support box: Rigidly attached to diaphragms and beams by adjustable brackets, stools or shims.

MODULAR JOINT CONFIGURATIONS

Figure 3.6.2.3-1

3.7 Bearings

3.7.1 Bearing Assemblies

3.7.1.1 Elastomeric Bearings

LRFD and LFD

Standard Elastomeric Expansion Bearing Assemblies for conventional structures are detailed in Section 3.7.4. These bearings shall be utilized for all new designs that are within the parameters outlined in Section 3.7.4 (which include both the AASHTO LRFD and LFD Specifications). The maximum elastomeric bearing size detailed in Section 3.7.4 is based on the Department's capacity for testing. Larger elastomeric bearings may be permitted on certain projects provided the cost of testing the bearing by outside agencies is considered and approval is obtained from the Bureau of Bridges and Structures.

3.7.1.2 Fixed Bearings

LRFD and LFD

The standard fixed bearing used in conjunction with standard elastomeric bearings is the low profile fixed bearing detailed in Figure 3.7.1.2-1. The standard fixed bearing used for steel beams at integral abutments is detailed in Figure 3.7.1.2-2.

Thickness of Plates: Bearing plate thicknesses and connecting weld sizes for standard fixed (non-integral abutment) bearings shall be determined by use of the formulas given in Figure 3.7.1.2-3. The thickness of top bearing plates on girders with bearing stiffeners shall be 80% of the thickness required if no stiffeners were present. For LRFD, the design loadings shall be as detailed in Section 3.7.4.

On steel stringers, top bearing plates shall be beveled if the beam grade is ¼ in. in 12 in. or greater.

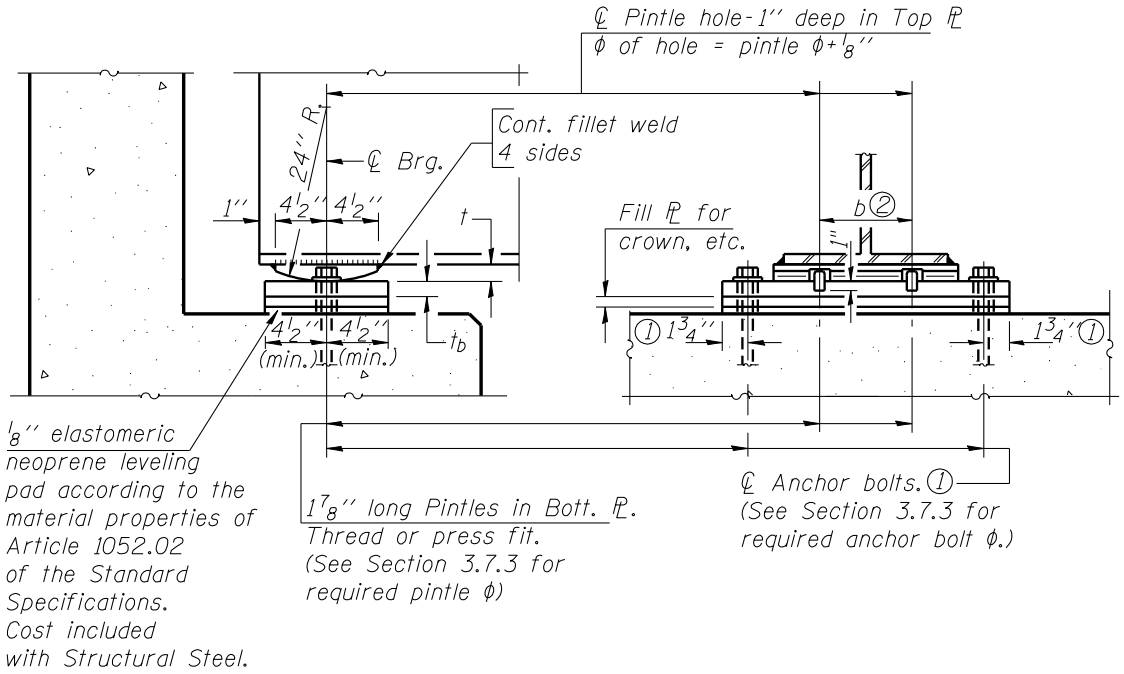

① Use 1.75 x bolt diameter for bolts ≥ 1 1/4'' ϕ.

② b = ±50% of flange width

LOW PROFILE
FIXED BEARING

Figure 3.7.1.2-1

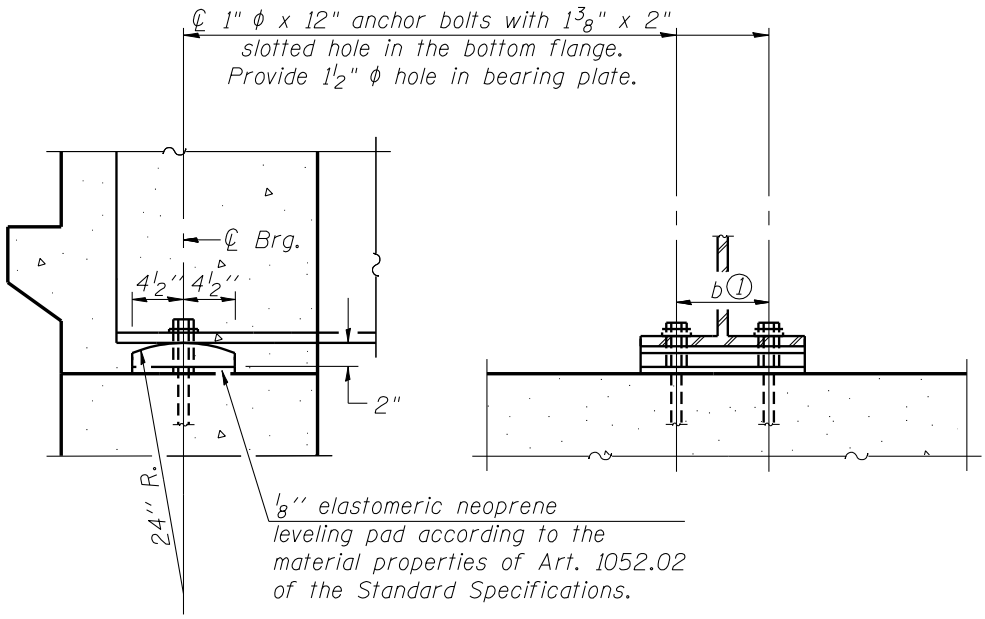

① b = ±50% of flange width

INTEGRAL ABUTMENT BEARING
FOR STEEL BEAMS

Figure 3.7.1.2-2

R= Reaction in kips (Service I)
Include impact for top plate only.
C= 0.167 for f_y = 36 ksi
C= 0.141 for f_y = 50 ksi
ℓ = Bottom flange width + 2(weld size) + $\frac{1}{2}$''

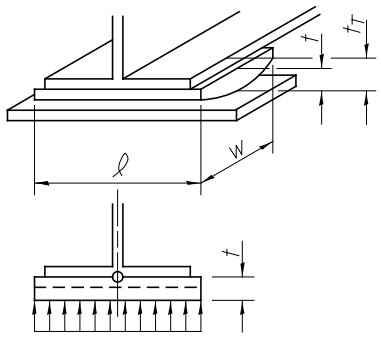

TOP BEARING PLATES

$$t_T = C\sqrt{\frac{R\ell}{w}}$$

*$t = t_T$ - flange thickness
Min. t = 1''

*With bearing stiffeners use 80% t.

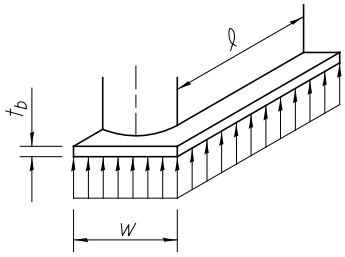

BOTTOM BEARING PLATES

$$w = \frac{R}{f_m\ (\ell + 2t_b)} \geq 9''$$

$$t_b = C\sqrt{\frac{Rw}{(\ell + 2t_b)}}$$

f_m = 0.3 f'c (ksi)
f_m may be increased by a modification factor: $\sqrt{\frac{A_2}{A_1}} \leq 2$

See 8.15.2.1.3 of the AASHTO LFD code or 5.7.5 of the AASHTO LRFD code.

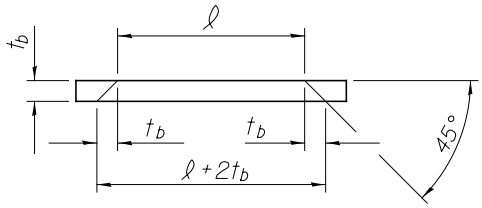

TOP PLATE WELD DESIGN

*(No Bearing Stiffeners)

S_w = Shear per inch of weld (K/in)

$$S_w = \frac{3\ R\ t_F\ t\ \ell}{4(t_F + t)^3\ (\ell + w)}$$

or

$$S_w = \frac{R_{DLE}}{5(2\ell + 2w)}$$

Whichever is larger

R_{DLE} = Sum of all contributing superstructure dead loads in kips at the given bearing under consideration (service).

Final weld size shall be $\frac{5}{16}$'' or greater.

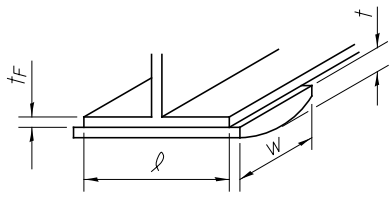

*With bearing stiffeners use $\frac{1}{2}$'' weld.

NON-ELASTOMERIC BEARING PLATE DESIGN

Figure 3.7.1.2-3

3.7.1.3 High Load Multi-Rotational (HLMR) Bearings – Pot and Disc

High Load Multi-Rotational (HLMR) bearings such as pot and disc are better suited for bearing designs beyond the limitations depicted in the charts of Section 3.7.4. They shall be required for structures designed for curvature. They may be required for long span or unique structures. There are a variety of HLMR bearing designs that may or may not conform to the Department's specifications and design requirements. See the Department's website for prequalified HLMR bearings. The Bureau of Bridges and Structures should be consulted to verify the acceptability of any HLMR bearing recommended for use. Section 3.7.5 provides designers with guidance on proper Contract plan details and specific design criteria for HLMR bearings. A Special Provision (GBSP 13) provides information for both pot and disc bearings.

3.7.1.4 Bearings for Prestressed Beam Bridges

Most elastomeric and steel bearings for prestressed concrete I-beams are detailed on the base sheets. The exception is elastomeric bearing details for PPC I-beams on semi-integral abutments which are presented in Figure 3.7.4-17. The design aids and procedures presented in Section 3.7.4, however, may be used to size elastomeric bearings for prestressed concrete I-beams.

3.7.1.5 Seismic Isolation Bearings

IDOT has selectively employed seismic isolation bearings in the southern part of Illinois where earthquake loadings are a concern. It is anticipated that the use of isolation bearings will increase due to the heightened accelerations associated with adoption of the 1000 yr. design earthquake return period into the LRFD Code. For some bridges, either new or retrofitted, seismic isolation bearings may be a viable alternative depending on where they are located in Southern Illinois, the soil type at the bridge site, and other factors. The Bureau of Bridges and Structures shall be consulted to verify if seismic isolation bearings are acceptable and/or warranted for a particular bridge. For bridges designed with the LFD code, if isolation bearings are approved by the BBS, the AASHTO "Guide Specification for Seismic Isolation Design" (1999) should be utilized. For bridges designed with the LRFD code, if isolation bearings are approved by the BBS, the "AASHTO Guide Specifications for LRFD Seismic Bridge Design" (2009) should be utilized.

3.7.1.6 Uncommon or Historical Bearing Types

Details of bearings no longer commonly used are given in the 2003 Edition of the Bridge Manual in Section 3.10. These bearings may be used in special situations and for rehabilitation projects where in-kind replacement or matching of existing bearings is necessitated.

3.7.2 Anchor Bolt Details

Typical Anchor Bolt Details are shown below in Table 3.7.2-1.

ANCHOR BOLT DETAILS		
Bolt Dia. x Length (in.)	Plate Washer (in.)	Bearing Plate Hole Dia (in.)
5/8 x 12	1 3/4 x 1 3/4 x 5/16	1 1/8
3/4 x 12	2 x 2 x 5/16	1 1/4
1 x 12	2 1/4 x 2 1/4 x 5/16	1 1/2
1 1/4 x 15	2 3/4 x 2 3/4 x 5/16	1 3/4
1 1/2 x 18	3 x 3 x 5/16	2
2 x 24	3 1/2 x 3 1/2 x 5/16	2 1/2
2 1/2 x 30	4 x 4 x 5/16	3

Table 3.7.2-1

3.7.3 Seismic Requirements

3.7.3.1 Seismic Requirements for Non-Deck Beam Bridges

LRFD and LFD

The connection of the superstructure to the substructure for bridges in Seismic Performance Zone 1 (LRFD) or Seismic Performance Category A (LFD) shall be designed to withstand the total horizontal forces equal to 20% of the dead load reactions of the superstructure (R-Factor = 1.0) regardless of the specified design earthquake return period, 1000 or 500 yrs. 1000 yrs. (LRFD) is typically specified for new bridges and structures and 500 yrs. (LFD) is generally a standard specified for existing structures which are undergoing seismic retrofit. See Sections 2.1.2, 2.3.10 and 3.15. For Seismic Performance Zones (SPZ) 2 to 4 or Seismic Performance Categories

(SPC) B, C and D, a dynamic analysis, usually equivalent static single mode, is required to determine the horizontal seismic design force for substructure units. However, the design lateral force for anchor bolts for SPZ 2 to 4 or SPC B, C and D shall also be 20% of the dead load reaction of the superstructure (R-Factor = 1.0) when the soil conditions are not poor without regard to the design earthquake level. Poor soil is defined as that in soil Site Class E or Profile Type IV and below depending on the considered design earthquake return period, 1000 or 500 yrs., respectively. When soil conditions are poor or liquefaction is a concern, special analysis and design techniques should be employed. See Sections 3.15 and 3.10 for more information on the design of bridges for seismic loadings as the bearings along with their connections are only one part of an Earthquake Resisting System (ERS) for a bridge.

Given below are equations and tables which provide guidelines for meeting the nominal connection requirements described above for typical bridges in SPZ 1 to 4 or SPC A to D. They are applicable to structures which use a combination of elastomeric bearings and low-profile fixed bearings to support the beams (including bridges with integral abutments). An exception is with the semi-integral bearings in Figures 3.7.4-16 and 3.7.4-17 which detail a 1 in. diameter anchor bolt. These connections are considered to be adequate for all cases which encompass the 20% dead load minimum requirement because of the additional nominal resistance provided by the wingwalls.

Anchor bolts, longitudinal and transverse bearing support lengths, side retainers and pintles are all used in various combinations (depending on the bridge) as part of a design strategy (or ERS) to meet the seismic design requirements of Zones 1 to 4 and Categories A to D. The simple guidelines and methods presented below are primarily intended to prevent a loss of span during an earthquake. The connections (i.e. anchor bolts, side retainers and pintles) are intended to act as “fuses” which are tripped or “blown” at a certain level of acceleration. When these fuses are blown, seat widths or support lengths shall be adequate to prevent span loss. The period of the structure will also, in all likelihood, increase as the connections fail and there will be some level of isolation between the superstructure and substructure. As such, the energy from an earthquake required to be resisted by the substructures and foundations of a bridge should be reduced. It is important to note that some level of damage is expected (and planned for) during a large earthquake event.

Minimum bearing support length requirements for both LRFD and LFD seismic design for specified earthquake return periods of 1000 and 500 yrs. are covered in Section 3.15 of this

manual. An adequate support length in both the transverse and longitudinal directions is the primary tool used to prevent span loss should/when side retainers or pintles fail because they only have "nominal" strength or act as a "fuse". Note as well that the substructures and foundations of bridges are also designed as fuses according to the Department's ERS philosophy. However, these fuses have a much higher "amperage" rating than those of the connection between the superstructure and substructure.

A simple method for nominally designing the anchor bolts is to consider shear as the only failure mode. For this approach, the number of anchor bolts required along each beam line is given by the following equation.

$$N = \frac{C_{il} \times (DL)}{F}$$

Where:

N	=	number of anchor bolts required for the given bearing under consideration
DL	=	superstructure dead load at the given bearing under consideration (service or factored extreme event elastic seismic force)
C_{il}	=	0.2 (20%) for SPZ 1 to 4 (LRFD) and SPC A to D (LFD)
F	=	the allowable shear force per anchor bolt for seismic loadings is given in Table 3.7.3-1 (Based upon the equation $\phi 0.48 A_b F_u$ with ϕ = 0.75. ϕ of 1.0 substituted with 0.75 to nominally account for tension.)

Note that it is not a significant consideration to design the bolted connection between the top bearing plate and the bottom flange for seismic loadings. However, in special cases or situations such as poor soil conditions or when there are certain constraints for a bridge undergoing seismic retrofitting, it may be.

Allowable Anchor Bolt Shear (Seismic Loading)			
Bolt Diameter (in.)	F (kips) A307 Gr. C F1554 Gr. 36 M314 Gr. 36	F (kips) F1554 Gr. 55 M314 Gr. 55	F (kips) F1554 Gr. 105 M314 Gr. 105
5/8	6.6	8.3	16.6
3/4	9.5	11.9	19.9
1	17.0	21.2	35.3
1 1/4	26.5	33.1	55.2
1 1/2	38.2	47.7	79.5
2	67.9	84.8	141.4
2 1/2	106.0	132.5	220.9

Table 3.7.3-1

When feasible, the maximum size of anchor bolts should be limited to not greater than 1 ½ in. diameter.

Side retainers shall be provided on both sides of all elastomeric bearings as shown in Figures 3.7.4-13 through 3.7.4-17. Retainers limit the amount of relative transverse displacement which can occur between bearings below the "fuse capacity" and can also help to keep the transverse moment of inertia of the superstructure from significantly degrading during an earthquake as they become plastic and are pried out from their anchorage. The side retainers presented in Figure 3.7.4-18 are designed to act as fuses for larger seismic design forces but should stay elastic when the forces are smaller. These designs are intended for SPZ 1 to 4 (LRFD) and SPC A to D (LFD). Generally, regardless of Seismic Zone or Category, seismic design forces will become larger as dead loads increase such as for longer span lengths or for PPC I-beam bridges as compared to steel superstructures. As such, the actual fuse level varies somewhat from bridge to bridge. See Section 3.15 for more information and discussion. The lateral seismic design forces for side retainers are identical to those described above for anchor bolts.

Stronger combinations of anchor bolts and side retainers than those given above which stay elastic during an earthquake may be required by design when soil conditions are poor or in special situations such as when it is impractical to enlarge available seat lengths for a bridge undergoing retrofit. For these situations, however, the designer should also strongly consider isolation

bearings as an option. When side retainer-anchor bolt combinations are required to stay elastic during an earthquake; the bolts should be designed for combined shear and tension, and the plate thicknesses of the side retainers, at a minimum, can be increased. It may also be necessary to provide more than one anchor bolt per retainer, or longer embedment lengths of the anchor bolts. The side retainer configuration shown in Figure 3.7.4-18 can be analyzed with simple statics using a strut and tie type model.

The number and size of pintles required at fixed bearings shall be designed for the same horizontal forces as the anchor bolts provided for at that bearing. The allowable pintle loads given in Table 3.7.3-2 are based upon nominal strengths (ϕ = 1.0) for LRFD or LFD design, or 150% of capacity using an ASD formulation. The number of pintles which are required along each beam line is given by the following equation.

$$N_p = \frac{C_{il} \times (DL)}{F_p}$$

Where:

N_p	=	number of pintles required for the given bearing under consideration
DL	=	unfactored superstructure dead load reaction at the given bearing under consideration
C_{il}	=	0.2 (20%) for SPZ 1 to 4 (LRFD) and SPC A to D (LFD)
F_p	=	the allowable shear force per pintle for seismic loading given in Table 3.7.3-2

Pintle Allowable Shear for Seismic Loading		
Pintle Dia. (in.)	Fp (kips) Fy = 36 ksi	Fp (kips) Fy = 50 ksi
1 1/4*	26.5	36.8
1 3/8	32.1	44.5
1 1/2	38.2	53.0
1 5/8	44.8	62.2
1 3/4	52.0	72.2
1 7/8	59.6	82.8
2	67.9	94.2
2 1/8	76.6	106.4

*minimum pintle diameter

Table 3.7.3-2

If in special cases pintles are to remain elastic during an earthquake, they should be designed for shear only.

3.7.3.2 Seismic Requirements for Deck Beam Bridges

Due to typically small dead load reactions per bearing, designing deck beam bearing connections for 0.2DL often necessitates using dowel rods that are unrealistically small. For this reason, deck beam bearing connections should always utilize a one inch dowel rod, and the connection should not be considered a fuse in seismic design. See Section 3.15 for seat width requirements for deck beam bridges.

3.7.4 Elastomeric Expansion Bearing Assemblies

LRFD and LFD

Elastomeric bearing assemblies are divided into three types according to the expansion lengths that they will accommodate. The details of the types are shown in Figure 3.7.4-1.

The Type I assembly is a conventional laminated pad where all of the movement is taken by distortion of the rubber. This type shall be limited to expansion lengths of 75 ft. or less for the 6 in. wide and 200 ft. or less for the 15 in. wide bearing.

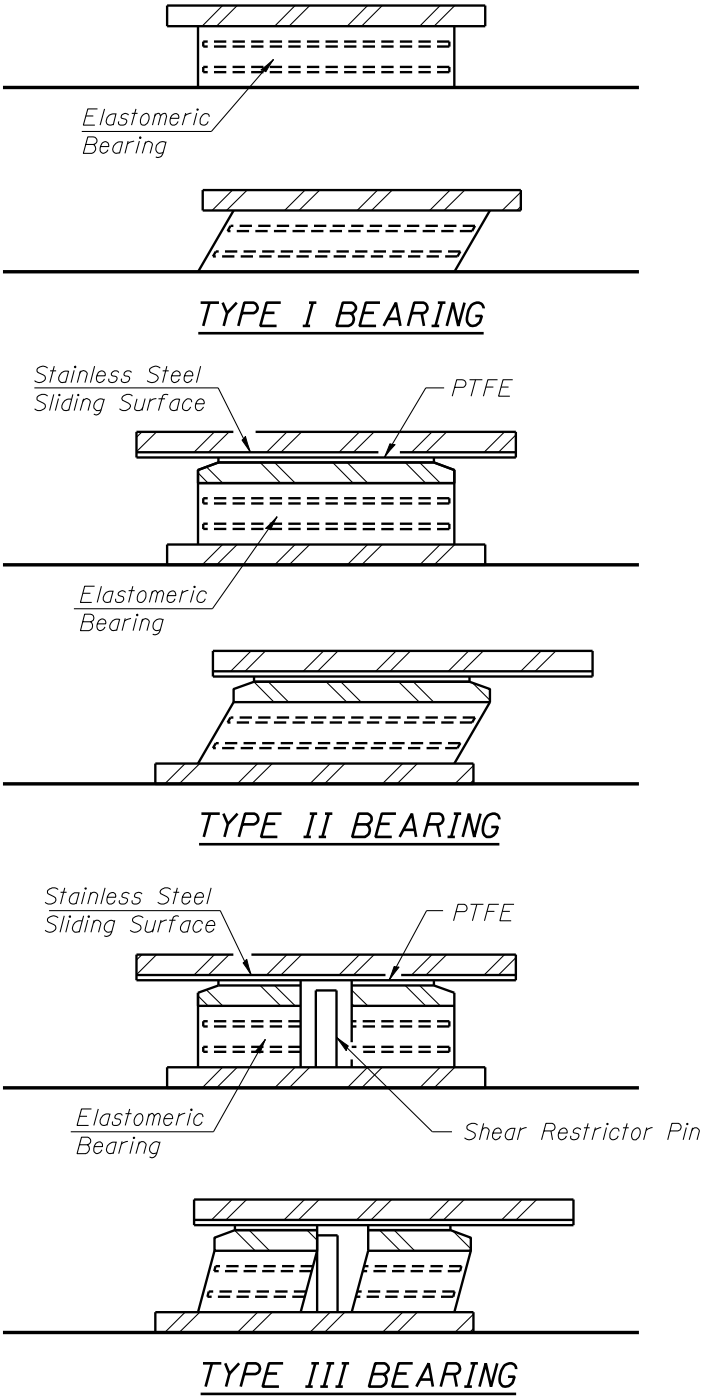

ELASTOMERIC &
PTFE ELASTOMERIC
EXPANSION BEARINGS

Figure 3.7.4-1

The Type II assembly has a teflon sliding surface incorporated to provide additional movement capacity. The movement is accomplished by both deformation of the elastomer and slippage on the teflon surface. The elastomer deforms until the internal shear force equals the friction force required to slip the teflon surface. The expansion length limitations of the Type II assembly shall be 150 ft. for the 6 in. wide bearing and 400 ft. for the 15 in. wide bearing.

The Type III bearing was developed to accommodate expansion lengths which exceed the limitations of the Type II bearing. The Type III is essentially a Type II with a shear restrictor pin added to prevent the rubber from overstressing in shear as movement occurs. The movement in excess of that allowed by the shear restrictor pin is accommodated by slippage on the teflon surface.

There is no limitation on the expansion length for which the Type III may be used as long as sufficient travel capability is provided by the shear restrictor pin and the size of the stainless steel plate. The rubber thickness is based on the deformation allowed by the shear restrictor pin and the rotational requirements for nonparallel load surfaces.

Figures 3.7.4-13, 3.7.4-14 and 3.7.4-15 depict standard details for Type I, Type II, and Type III elastomeric expansion bearings respectively. Figures 3.7.4-16 and 3.7.4-17 depict elastomeric bearing details which are intended to be used on new structures with semi-integral abutments. The machine bolts with threaded bar anchors are required to allow for ease of future bearing removal and replacement. Epoxy grouted anchor bolts with conventional bearing details may be used when an existing abutment is converted into a semi-integral abutment.

The design of elastomeric bearings is governed by four basic parameters. These parameters are as follows:

1. Dead Load Reaction.
2. Dead Load plus Live Load Reaction.
    a. Impact not included.
3. Expansion Length.
    a. Distance from point where bridge superstructure is assumed fixed for thermal expansion to expansion bearing.
4. Percent Slope due to Nonparallel Surfaces.
    a. Dead load rotation.

b. Camber of prestressed beams.
c. Profile grade of beam.

The design criteria are subject to certain limitations. These limitations are in terms of both allowable stresses and minimum dimensions. They are as follows:

1. The total effective rubber thickness (ERT) of the elastomer shall be a least 2 times the total movement for the Type I bearing. See Section 3.6.1 for temperature range and linear expansion coefficient.
   a. The total effective rubber thickness is defined as the summation of the individual layers of rubber including the top and bottom layers.
   b. For the Type II bearing, the ERT need only be equal to the total movement, due to the use of the Teflon and stainless steel sliding surfaces.
   c. For the Type III bearing, the ERT is not directly related to the total movement provided that the sliding surfaces remain in full contact as shown in Figure 3.7.4-1.
2. The width of the bearing parallel to the direction of movement shall be at least 3 times the total effective rubber thickness.
3. The stress due to dead load shall be between 200 and 500 psi.*
4. The stress due to dead load plus live load without impact shall be between 200 and 800 psi.*
5. Sufficient rubber thickness or a tapered plate shall be provided to avoid a lift-off condition on the leading edges of the pad.

   **The 200 psi minimum requirement is intended for preventing the horizontal crawling of the bearing when it is not attached to the top surface. This requirement has been applied to the bearing designs detailed in this manual even though these bearings are detailed with positive attachment to the flange of the girder. Compliance with the requirement is desirable but is not mandatory if it results in a special bearing design or special superstructure treatments.*

Design aids have been produced which incorporate the design parameters and limitations. These aids are shown in Figures 3.7.4-2 through 3.7.4-12 and were developed for LFD. However, they are still applicable for LRFD according to IDOT policy. Only the design loads for bearings using the LRFD Code will be somewhat different from those of LFD due to the HL-93 design loading and load distribution factors detailed in Sections 3 and 4 of the LRFD Provisions.

LRFD factored service reactions from load case Service I (Article 3.4.1) shall govern the design. The end shear/reaction amplification for skewed bridges (Article 4.6.2.2.3c) is not applicable for interior and exterior beam bearing designs at continuous piers. The factored resistance of structural steel in bearing assemblies shall be calculated as currently stipulated in this Manual.

The following is a step-by-step procedure for using the design tables:

1. The size of bearing required is determined by entering dead load reaction and the dead load plus live load reaction in the tables in Figure 3.7.4-2 or 3.7.4-3. The limits of the Type III bearings are reduced because of the reduction in area due to the holes for the shear restrictor pins.

2. The type of bearing required is determined from the table in Figure 3.7.4-4. If a Type III is required, the table in Figure 3.7.4-3 shall be checked to see that the limits of the Type III are not exceeded.

3. The thickness of the bearings is determined from Figures 3.7.4-5 through 3.7.4-11. Each bearing type is divided according to plan dimensions and thicknesses. The thicknesses (series) are designated by letters such as a, b, c, etc. which correspond to dimensions given in Figures 3.7.4-21 through 3.7.4-23. For Type I and II bearings, the thickness required for expansion requirements is found in Figures 3.7.4-5 and 3.7.4-6. The thickness required to satisfy slope requirements for Type II and III bearings is given in Figures 3.7.4-7 through 3.7.4-11. For Type I bearings the slope requirements are shown in Figure 3.7.4-21. Both of these thicknesses shall be determined and the maximum used. If a tapered plate is used, the slope becomes zero and series “a” will satisfy slope requirements only. For Type III bearings, the only requirement is to meet the slope requirements. Therefore, only the tables in Figures 3.7.4-7 through 3.7.4-11 are used to determine which series is required. If a tapered plate is used, again the slope becomes zero and a series “a” is required. After the correct series is determined, the detailing dimensions are found in Figures 3.7.4-20 through 3.7.4-23. Additional figures are included to provide detailing aids.

A force acting in a direction parallel to the movement shall be applied to the substructure at the base of the bearing. This force is due to either the force required to deform the elastomer of the Type I bearing or the friction force required for slippage of the teflon surface on the Types II and III bearings. The magnitude of the force shall be 25 pounds per square inch of bearing area for Type I bearings and .04 times the dead load reaction for Types II and III bearings.

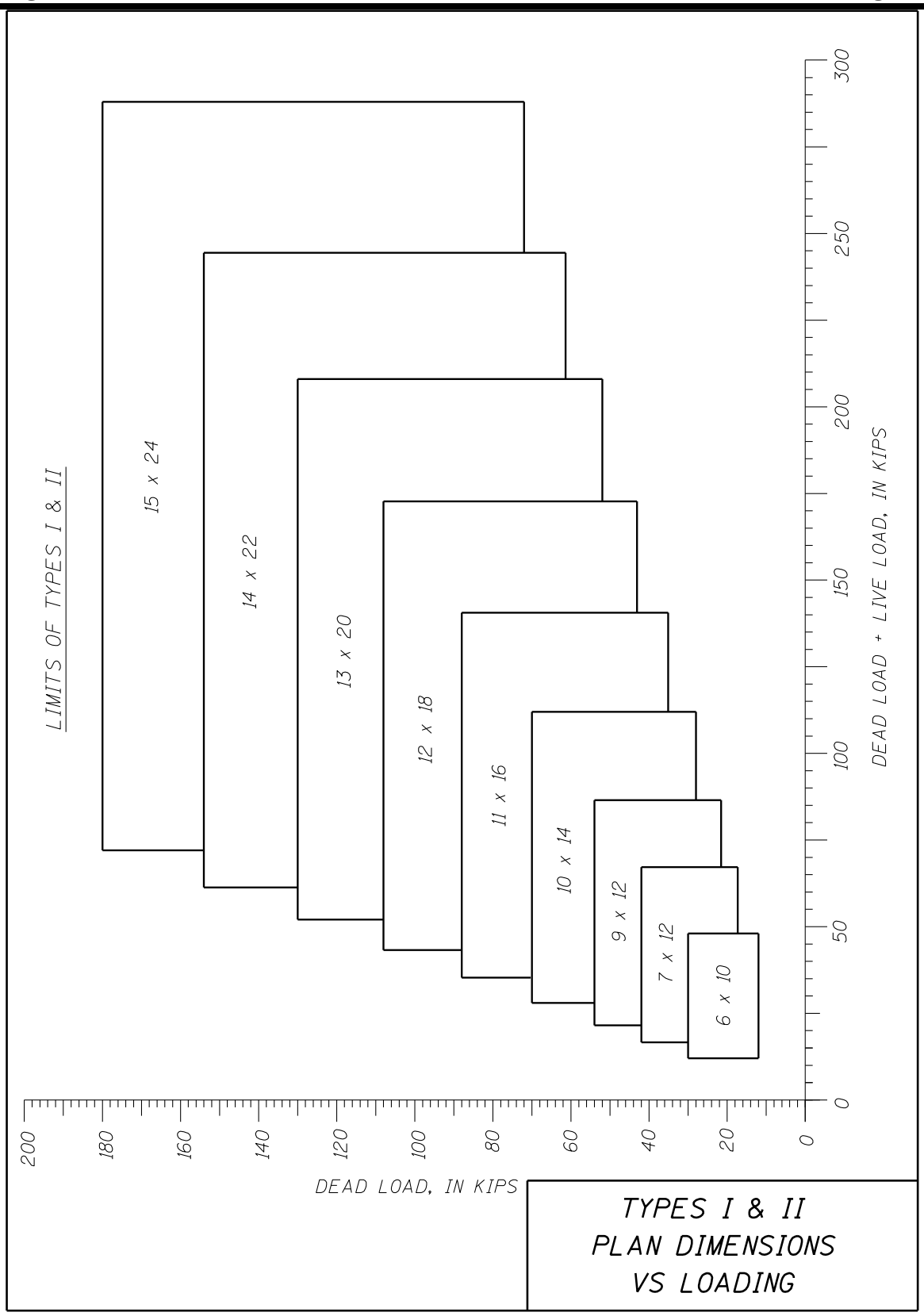
LIMITS OF TYPES I & II
15 x 24
14 x 22
13 x 20
12 x 18
11 x 16
10 x 14
9 x 12
7 x 12
6 x 10
DEAD LOAD + LIVE LOAD, IN KIPS
0
50
100
150
200
250
300
DEAD LOAD, IN KIPS
0
20
40
60
80
100
120
140
160
180
200
TYPES I & II
PLAN DIMENSIONS
VS LOADING

Figure 3.7.4-2

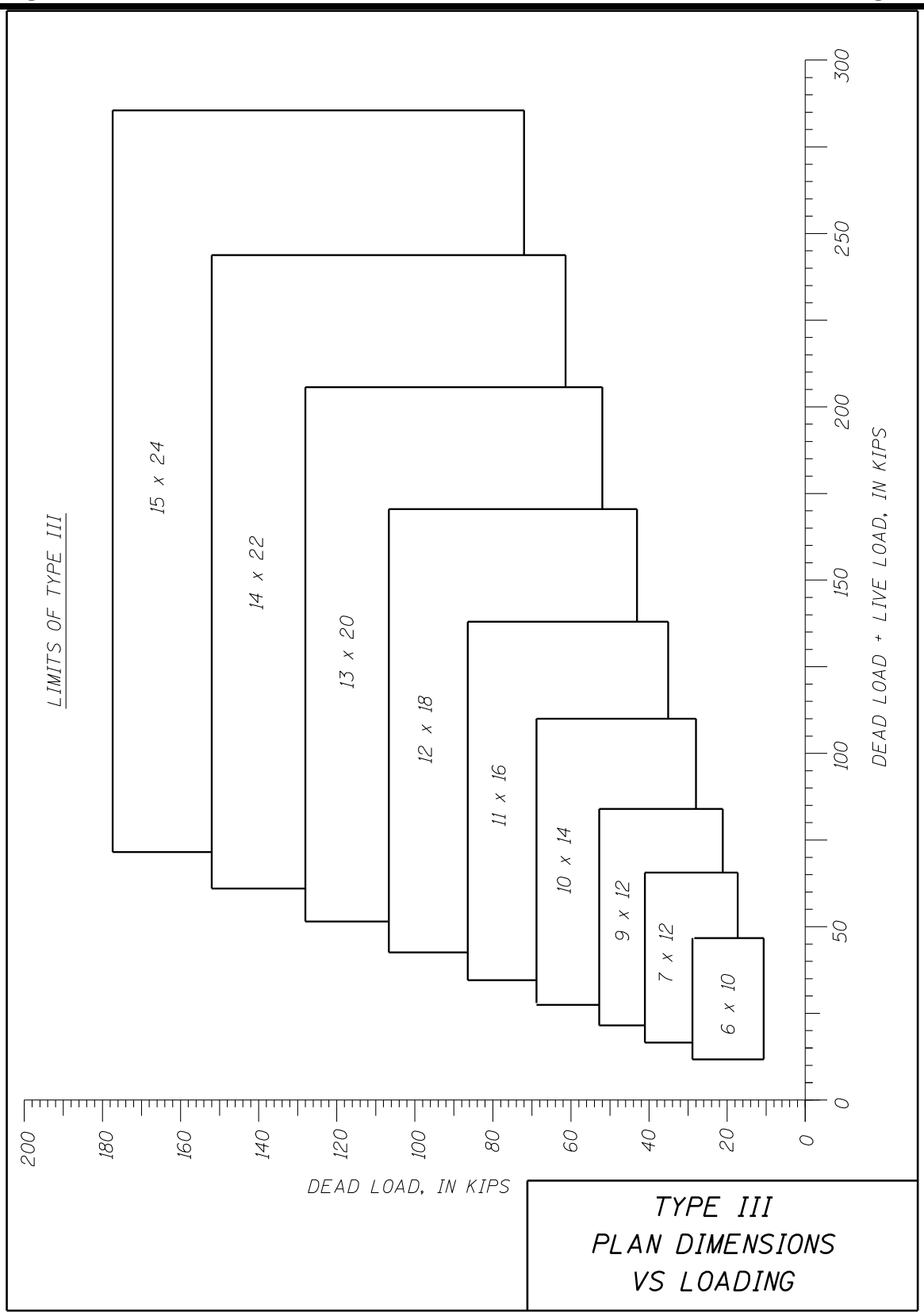
LIMITS OF TYPE III
15 x 24
14 x 22
13 x 20
12 x 18
11 x 16
10 x 14
9 x 12
7 x 12
6 x 10
DEAD LOAD + LIVE LOAD, IN KIPS
0
50
100
150
200
250
300
DEAD LOAD, IN KIPS
0
20
40
60
80
100
120
140
160
180
200
TYPE III
PLAN DIMENSIONS
VS LOADING

Figure 3.7.4-3

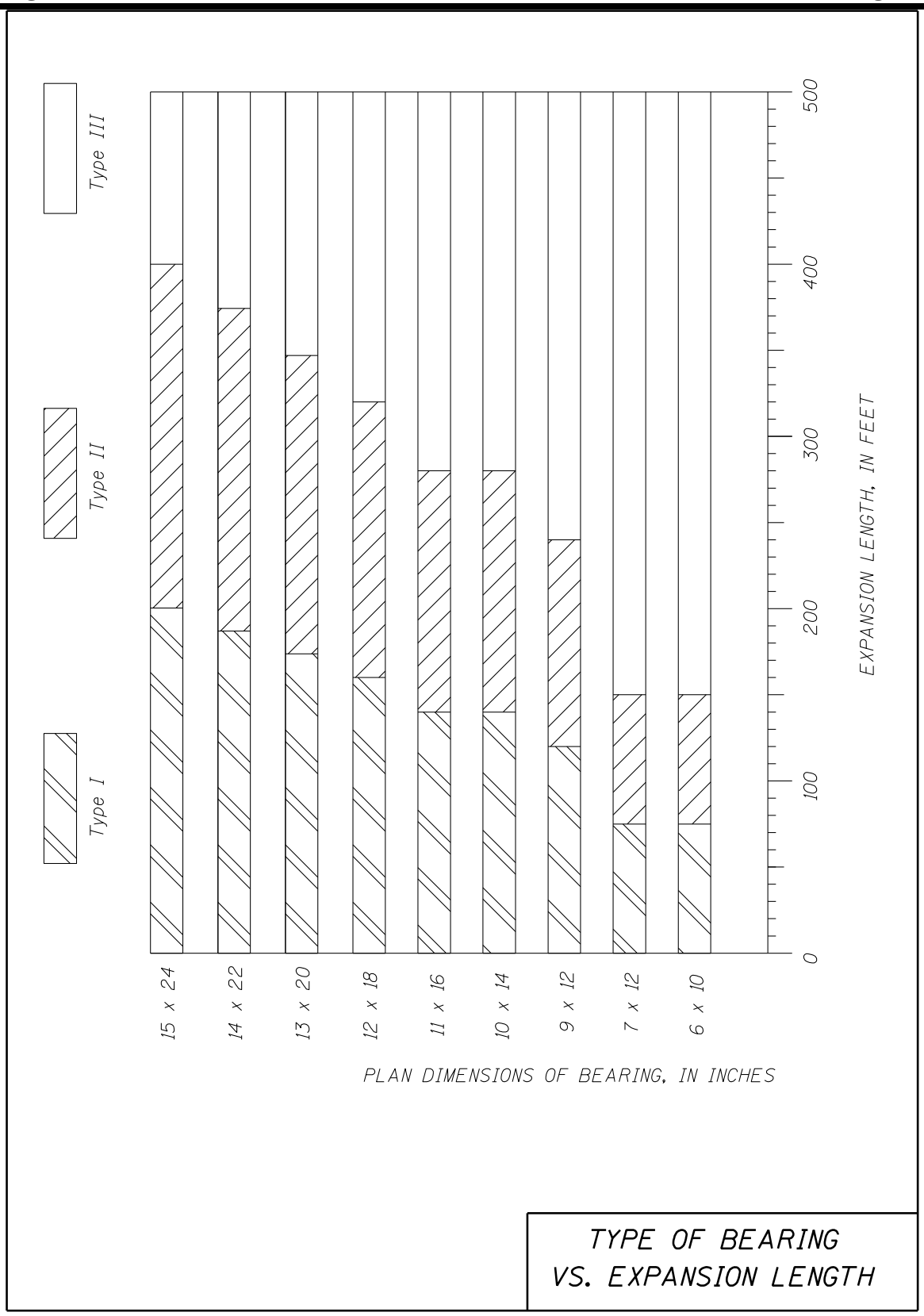
Type I
Type II
Type III
15 x 24
14 x 22
13 x 20
12 x 18
11 x 16
10 x 14
9 x 12
7 x 12
6 x 10
PLAN DIMENSIONS OF BEARING, IN INCHES
0
100
200
300
400
500
EXPANSION LENGTH, IN FEET
TYPE OF BEARING
VS. EXPANSION LENGTH

Figure 3.7.4-4

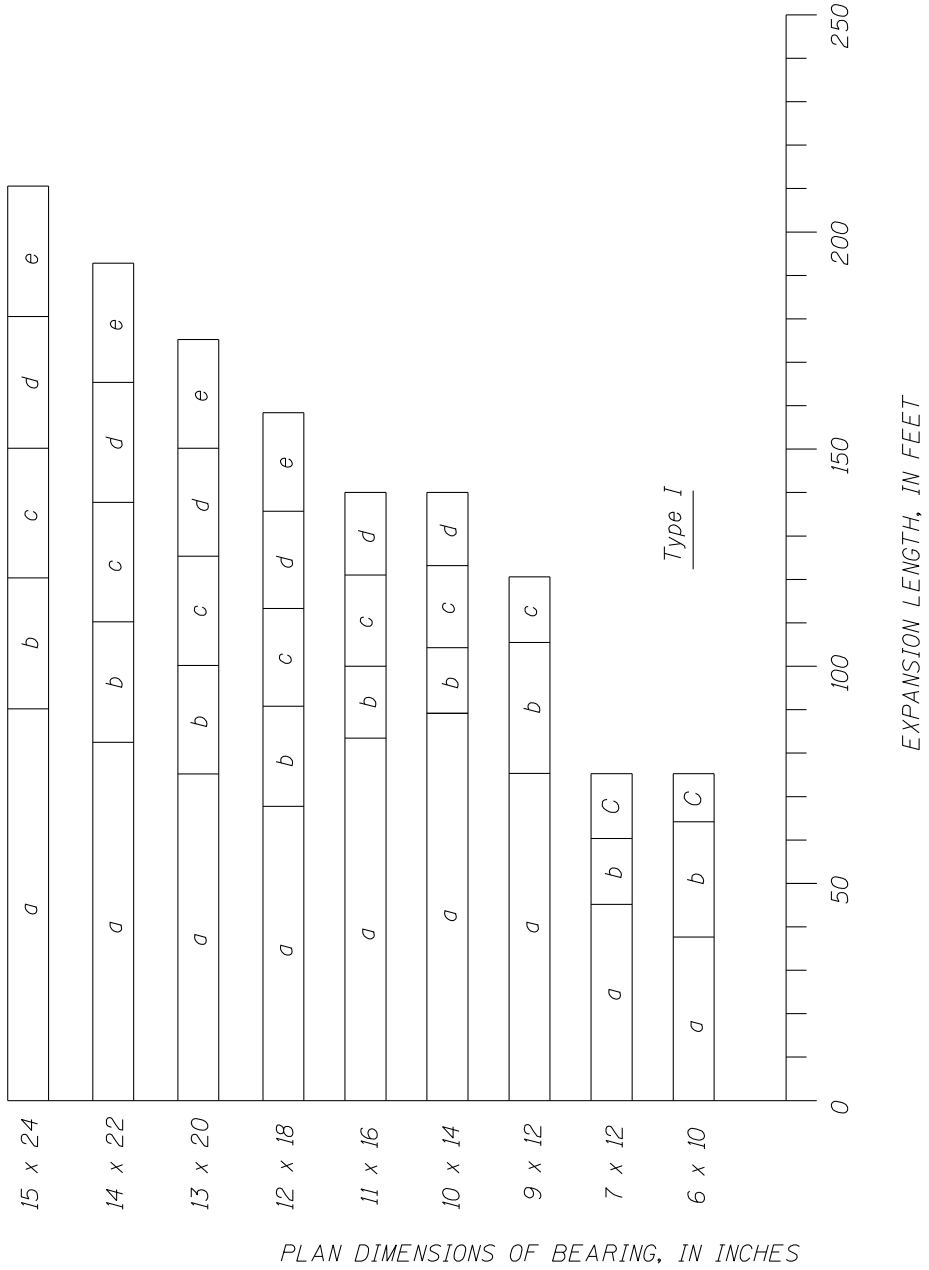

TYPE I
MINIMUM BEARING THICKNESS
VS. EXPANSION LENGTH

Figure 3.7.4-5

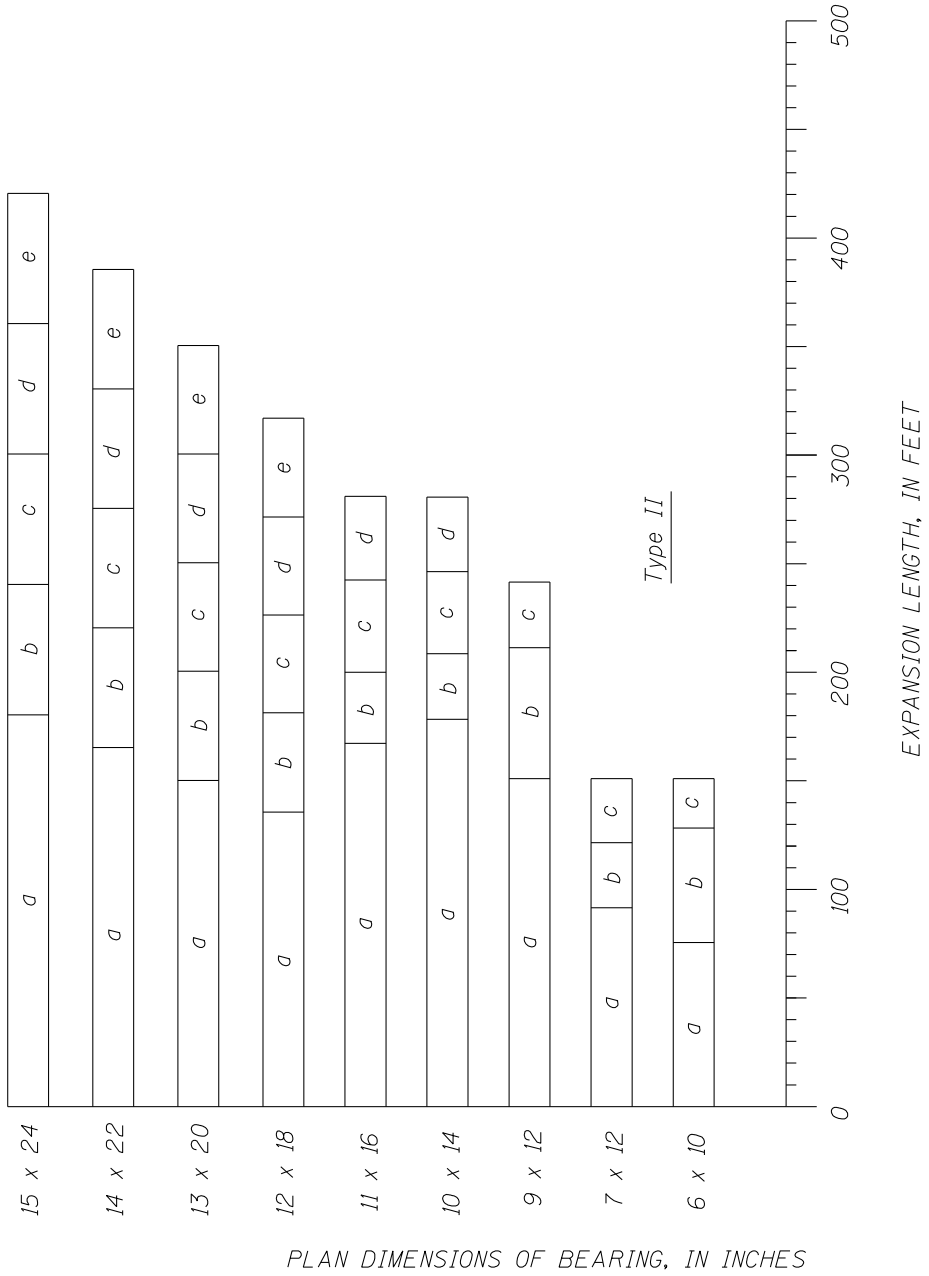

TYPE II
MINIMUM BEARING THICKNESS
VS. EXPANSION LENGTH

Figure 3.7.4-6

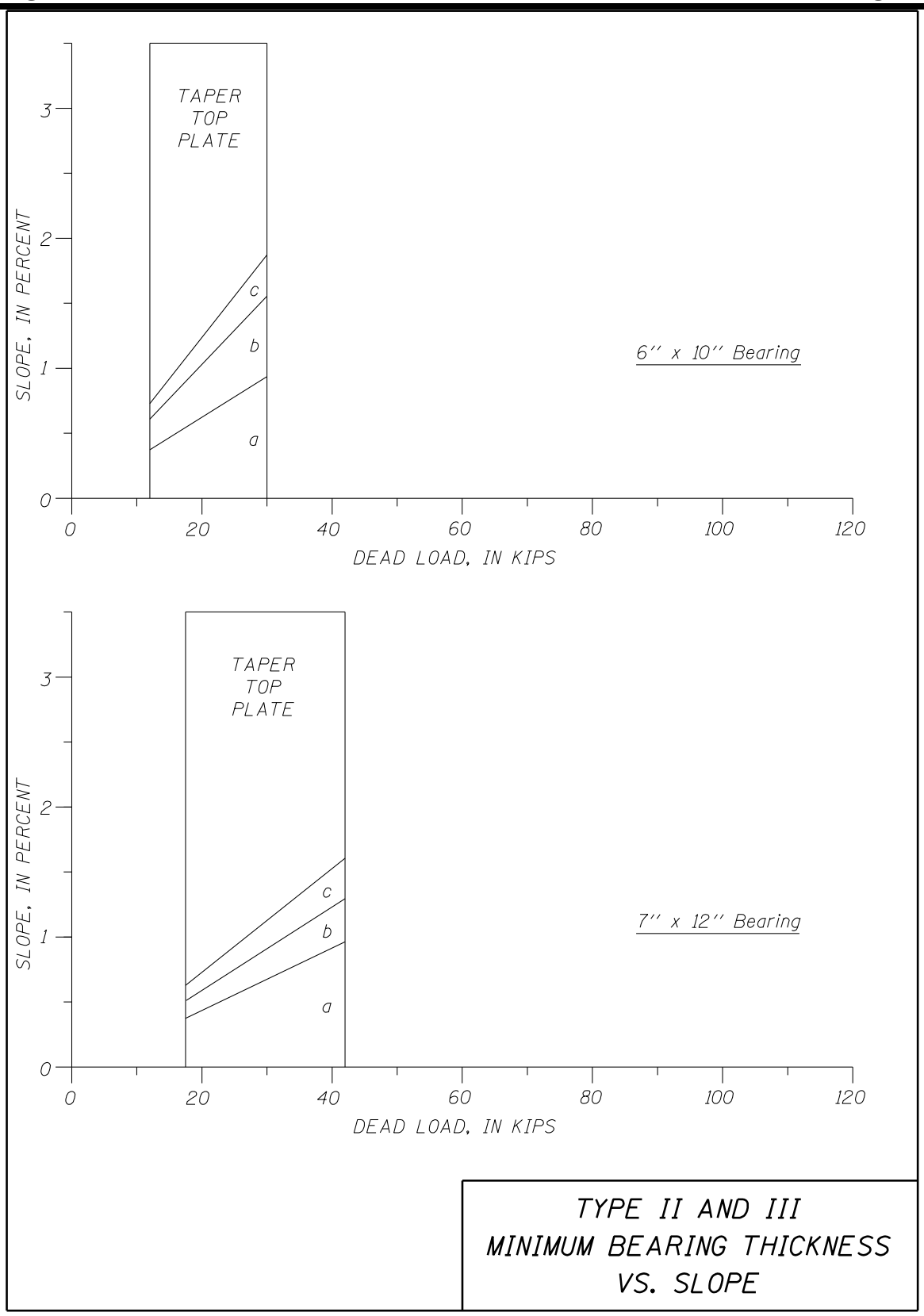
TAPER
TOP
PLATE
SLOPE, IN PERCENT
0
1
2
3
c
b
a
6'' x 10'' Bearing
0
20
40
60
80
100
120
DEAD LOAD, IN KIPS
TAPER
TOP
PLATE
SLOPE, IN PERCENT
0
1
2
3
c
b
a
7'' x 12'' Bearing
0
20
40
60
80
100
120
DEAD LOAD, IN KIPS
TYPE II AND III
MINIMUM BEARING THICKNESS
VS. SLOPE

Figure 3.7.4-7

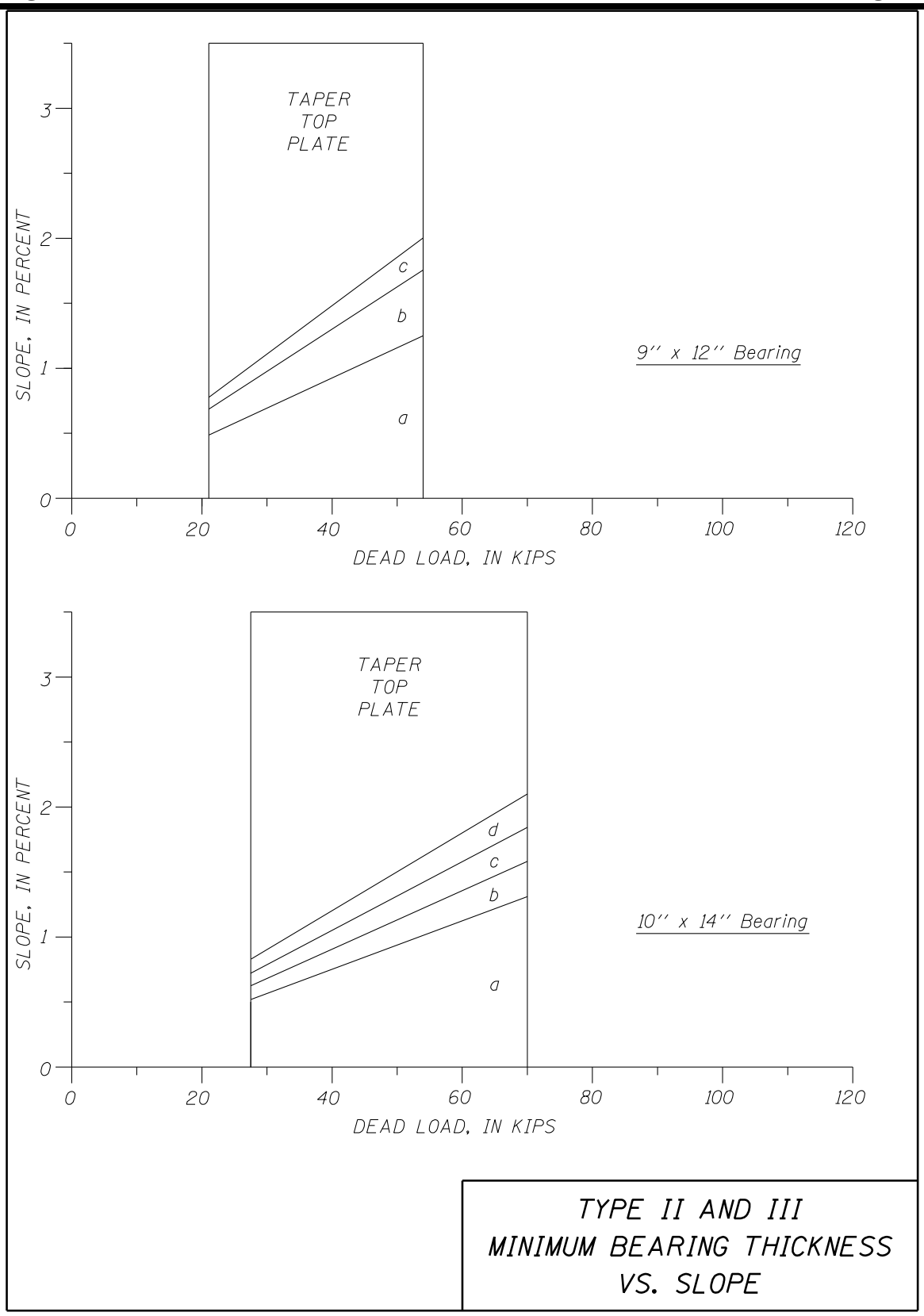
TAPER
TOP
PLATE
c
b
a
9'' x 12'' Bearing
SLOPE, IN PERCENT
DEAD LOAD, IN KIPS
0
1
2
3
0
20
40
60
80
100
120
TAPER
TOP
PLATE
d
c
b
a
10'' x 14'' Bearing
SLOPE, IN PERCENT
DEAD LOAD, IN KIPS
TYPE II AND III
MINIMUM BEARING THICKNESS
VS. SLOPE

Figure 3.7.4-8

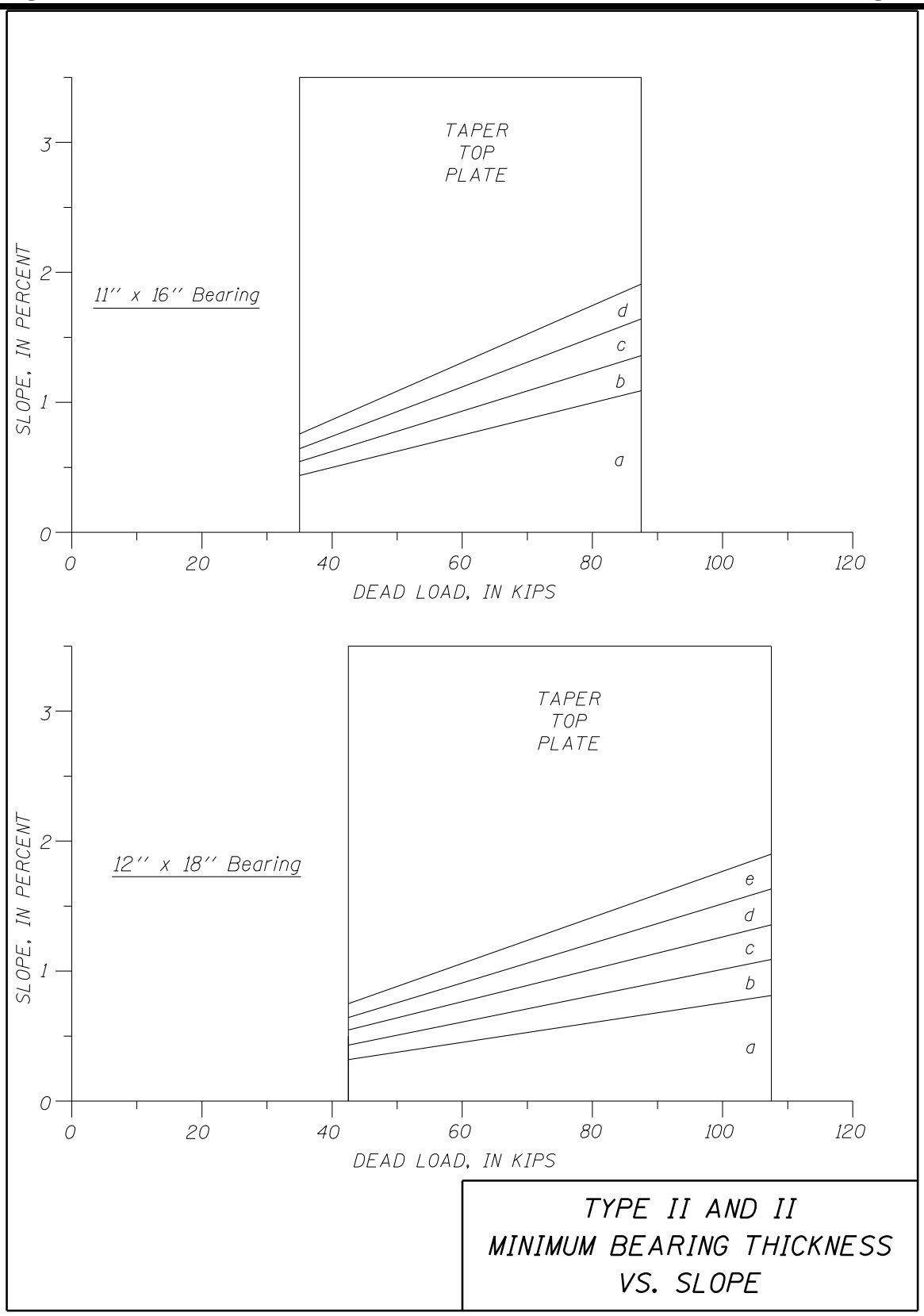
TAPER
TOP
PLATE
11'' x 16'' Bearing
SLOPE, IN PERCENT
DEAD LOAD, IN KIPS
a
b
c
d
0
1
2
3
0
20
40
60
80
100
120
TAPER
TOP
PLATE
12'' x 18'' Bearing
SLOPE, IN PERCENT
DEAD LOAD, IN KIPS
a
b
c
d
e
0
1
2
3
0
20
40
60
80
100
120
TYPE II AND II
MINIMUM BEARING THICKNESS
VS. SLOPE

Figure 3.7.4-9

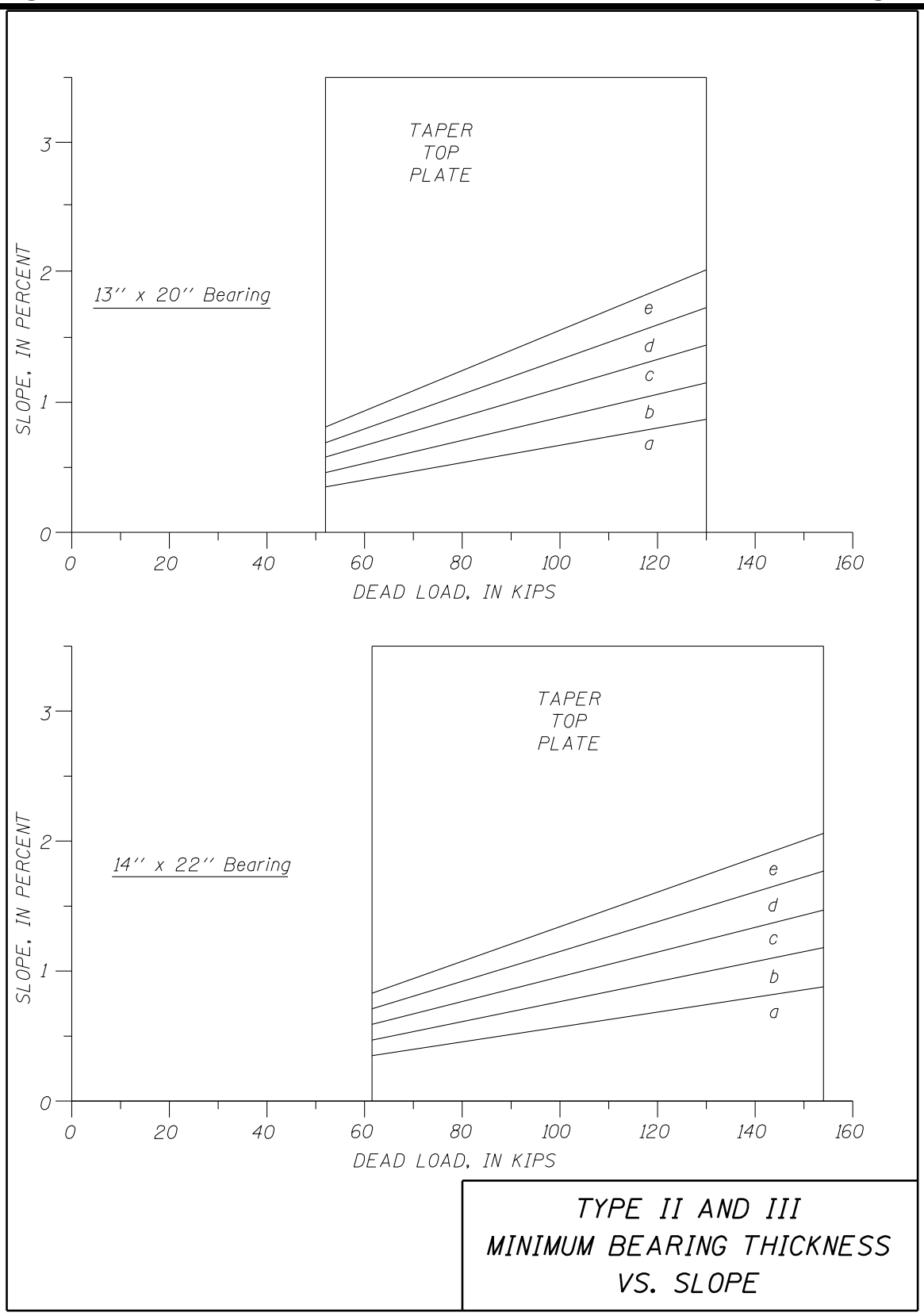

Figure 3.7.4-10

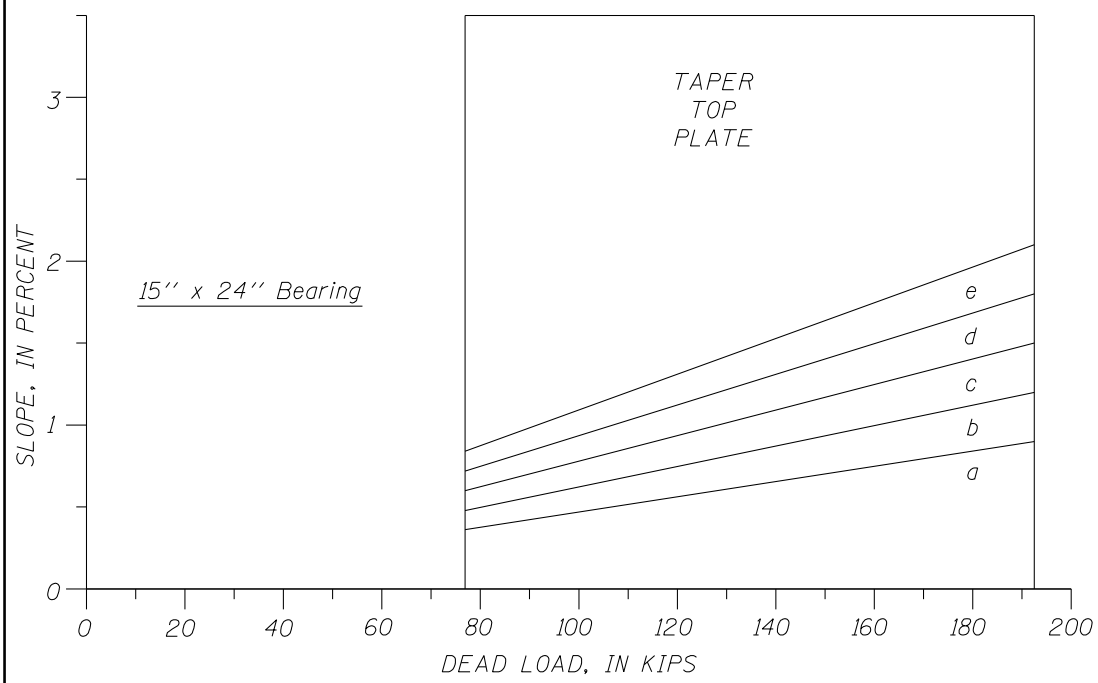

TYPE II AND III
MINIMUM BEARING THICKNESS
VS. SLOPE

Figure 3.7.4-11

TYPE I

(Maximum edge strain due to nonparallelism $\leq$.06 ERT)
(as given in the table on Figure 3.7.4-21)

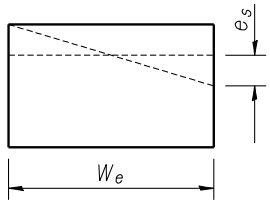

$$e_s = .06\ ERT$$

$$\text{Maximum \% Slope} = \frac{100\ e_s}{W_{e/2}}$$

$$\text{Maximum \% Slope} = \frac{12\ (ERT)}{W_e}$$

TYPE II & III

(No lift-off permitted under dead load)
(Recommended design as given in Figures 3.7.4-7 - 3.7.4-11)

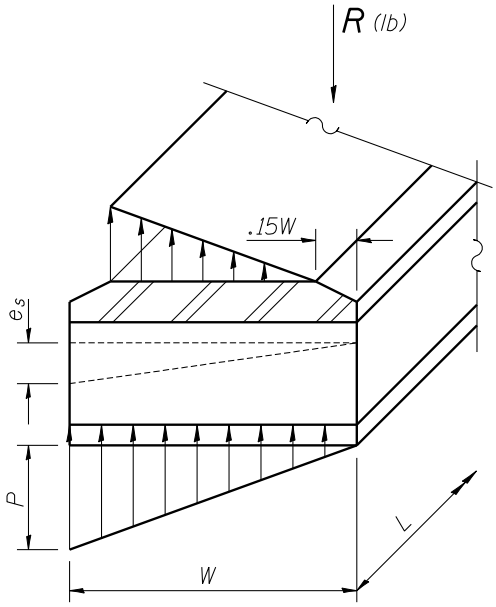

$$P = 1.4\ \frac{R}{WL}$$

$$e_s = \frac{P}{Er}(ERT)$$

$$\text{Maximum \% Slope} = \frac{100\ e_s}{W}$$

$$\text{Maximum \% Slope} = 0.012\ \frac{R\ (ERT)}{W^2 L}$$

$$Er = 1.2 \times 10^4\ \frac{psi}{in./(ERT)}$$

For $4.5 \leq SF \leq 6.0$ &
55±5 Durometer Rubber

SLOPE LIMITATIONS
FOR ELASTOMERIC
EXPANSION BEARINGS

Figure 3.7.4-12

*May be 1½" for smaller W shapes

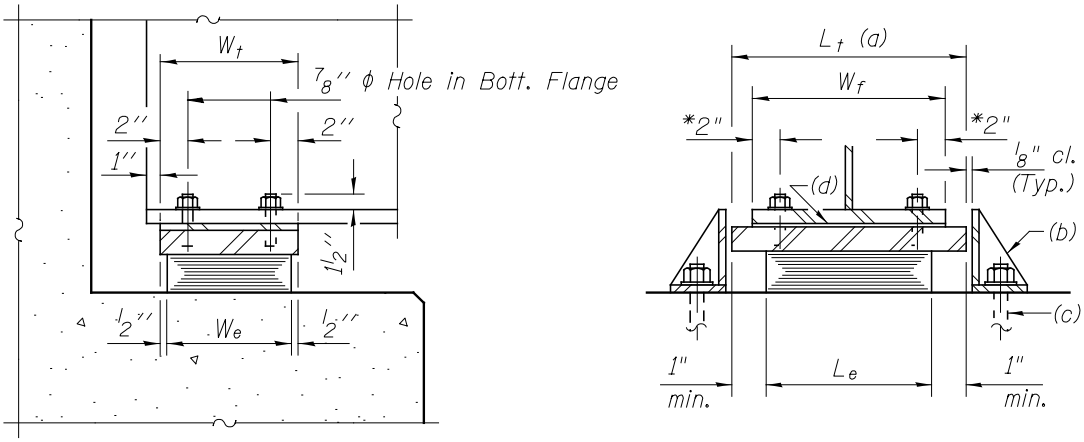

Notes:

(a) $L_t = W_f$ or L_e + 2" whichever is greater.
(b) Side retainer.
(c) Anchor bolt. See Section 3.7.3 for required sizes.
(d) Fill plate for crown and shim plate.
(e) 1½" Minimum thickness.
(f) 1½" + flange thickness + ¼" (for adjusting shims) + thickness of any fill plate for crown.

Side retainers, pintles, anchor bolts, nuts, washers and bearing plates may be galvanized for steel beams and shall be galvanized for PPC I-beams according to AASHTO M111 or M232 (as applicable).

H.S. bolts may be galvanized for steel beams and shall be galvanized for PPC I-beams according to AASHTO M298, Class 50.

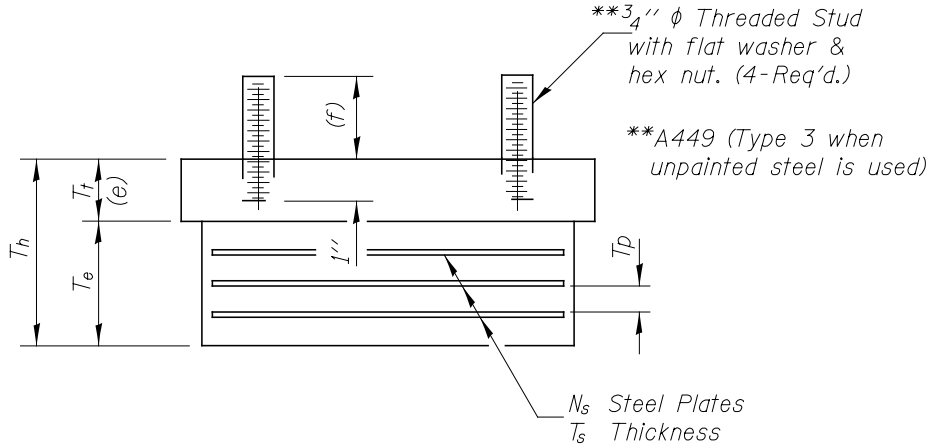

TYPE I
ELASTOMERIC
EXPANSION BEARING

Figure 3.7.4-13

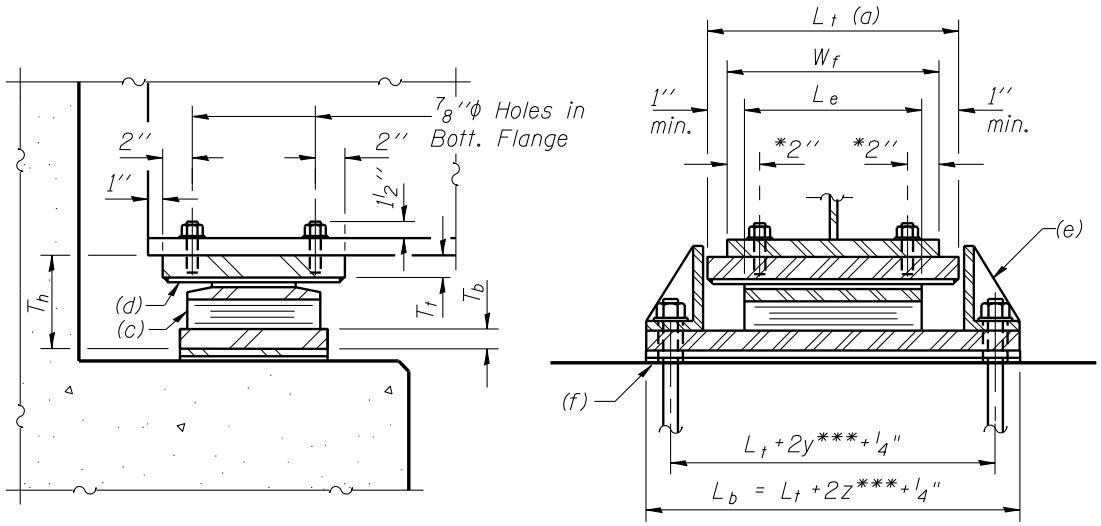

Notes:

(a) $L_t = W_f$ or L_e + 2" whichever is greater.

(b) $W_t = W_e$ - 2A + 2E + 2", E = Expansion from 50° normal temperature

(c) PTFE - Elastomeric bearing.

(d) 1/16" Stainless steel sliding plate, A240, Type 304, 2B finish.

(e) Side retainer.

(f) Fill plate for crown, shim plate and 1/8" elastomeric neoprene leveling pad according to the material properties of Article 1052.02 of the Standard Specifications. Cost of pad included with bearing.

Side retainers, pintles, anchor bolts, nuts, washers and bearing plates may be galvanized for steel beams and shall be for PPC I-beams according to AASHTO M111 or M232 (as applicable).

H.S. bolts may be galvanized for steel beams and shall be galvanized for PPC I-beams according to AASHTO M298, Class 50.

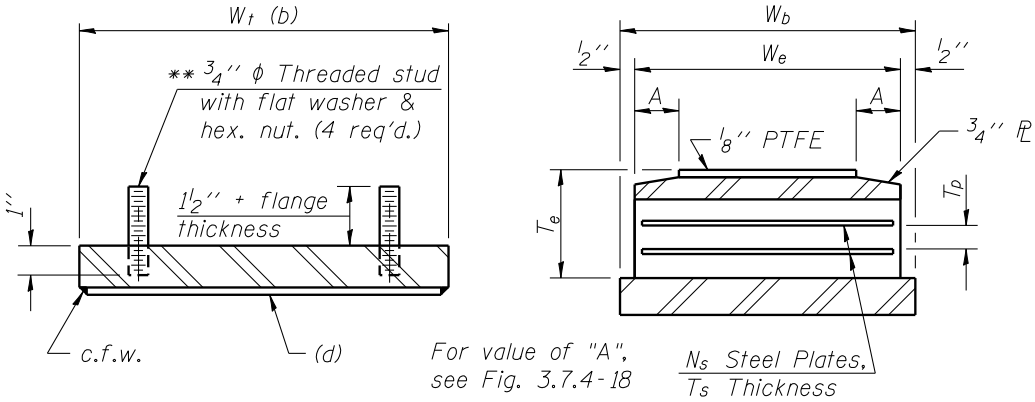

TOP BEARING ASSEMBLY

BOTTOM BEARING ASSEMBLY

* May be 1 1/2" for smaller W shapes.

** (M164, Type 3) when unpainted steel is used.

*** See Fig. 3.7.4-18 for value of y and z.

TYPE II
ELASTOMERIC
EXPANSION BEARING

Figure 3.7.4-14

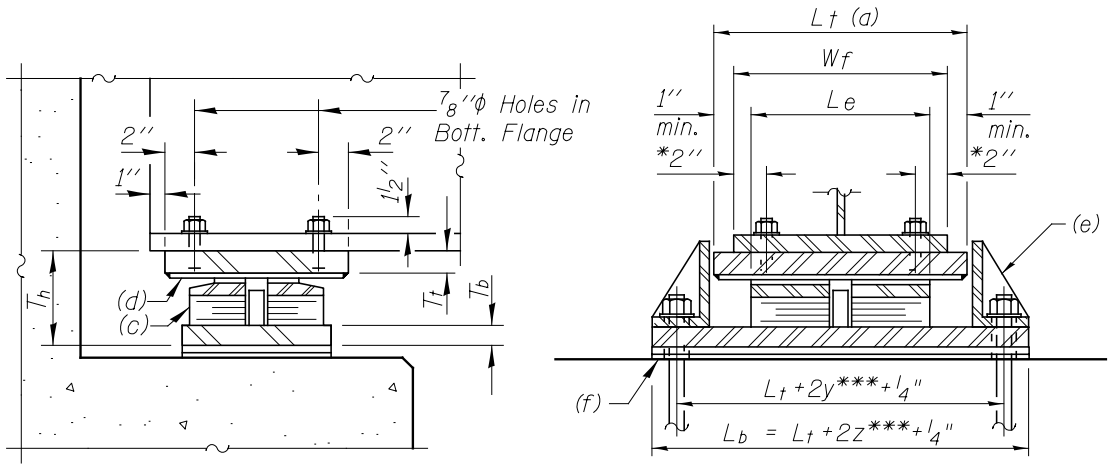

Notes:

(a) $L_t = W_f$ or L_e + 2" whichever is greater.

(b) $W_t = W_e$ - 2A + 2E + 2", E = Expansion from 50° normal temperature

(c) PTFE - Elastomeric bearing.

(d) 1/16" Stainless steel sliding plate, A240, Type 304, 2B finish.

(e) Side retainer.

(f) Fill plate for crown, shim plate and 1/8" elastomeric neoprene leveling pad according to the material properties of Article 1052.02 of the Standard Specifications. Cost of pad included with bearing.

(g) Shear restrictor pin, AISI 4340, quenched and tempered.

Side retainers, pintles, anchor bolts, nuts, washers and bearing plates may be galvanized for steel beams and shall be galvanized for PPC I-beams according to AASHTO M111 or M232 (as applicable).

H.S. bolts may be galvanized for steel beams and shall be galvanized for PPC I-beams according to AASHTO M298, Class 50.

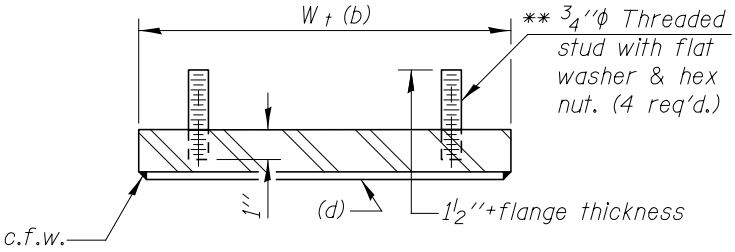

TOP BEARING ASSEMBLY

* May be 1 1/2" for smaller W shapes.

** A449 (Type 3 when unpainted steel is used).

*** See Fig. 3.7.4-18 for value of y and z.

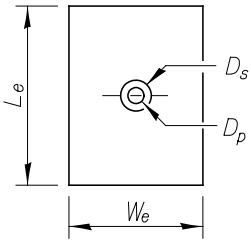

SLOT DETAIL

For value of "A" see Fig. 3.7.4-18

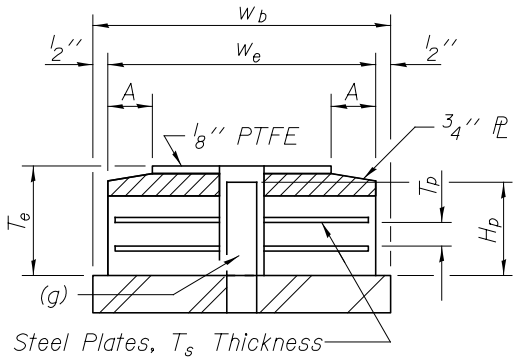

BOTTOM BEARING ASSEMBLY

TYPE III
ELASTOMERIC
EXPANSION BEARING

Figure 3.7.4-15

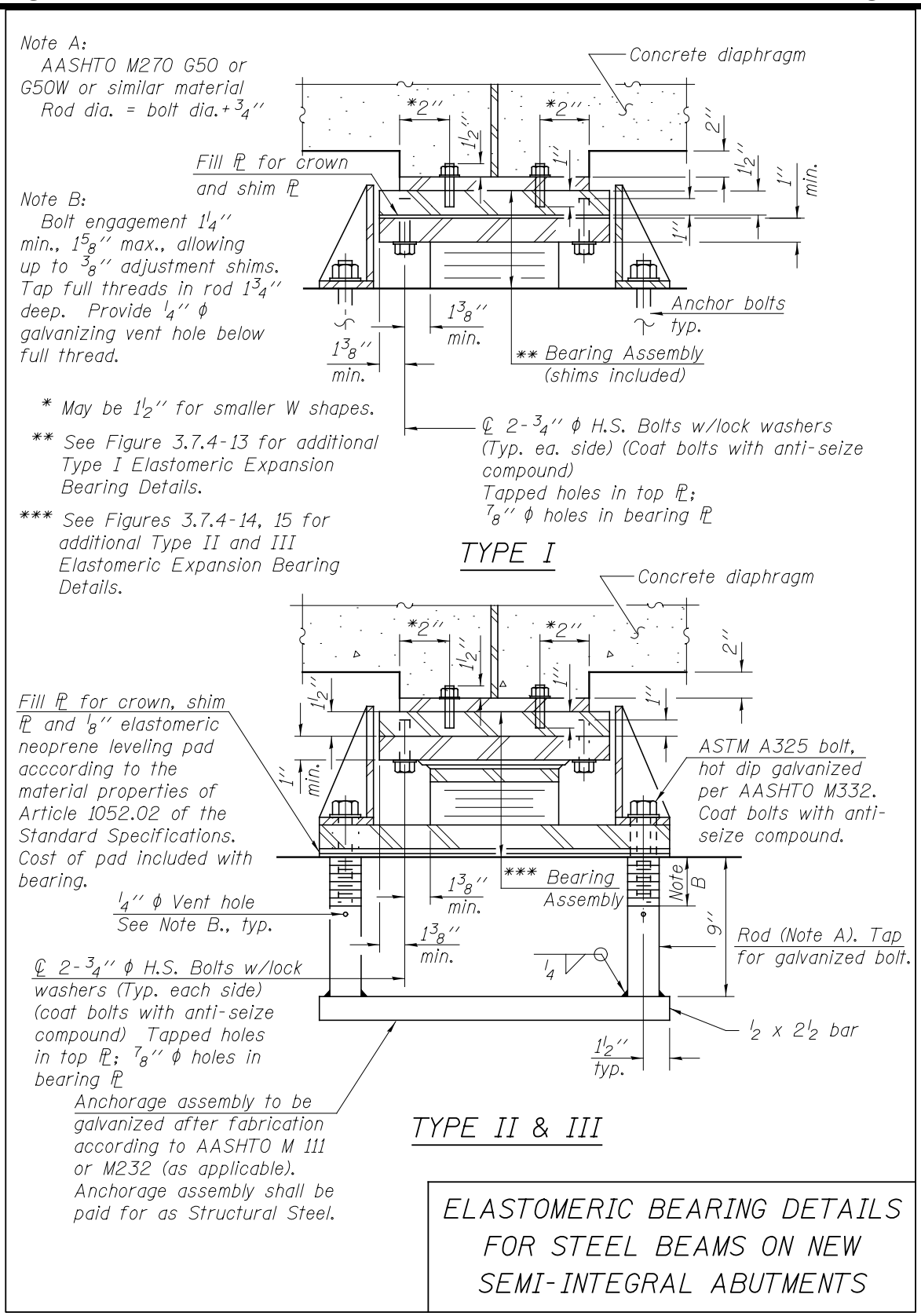

Figure 3.7.4-16

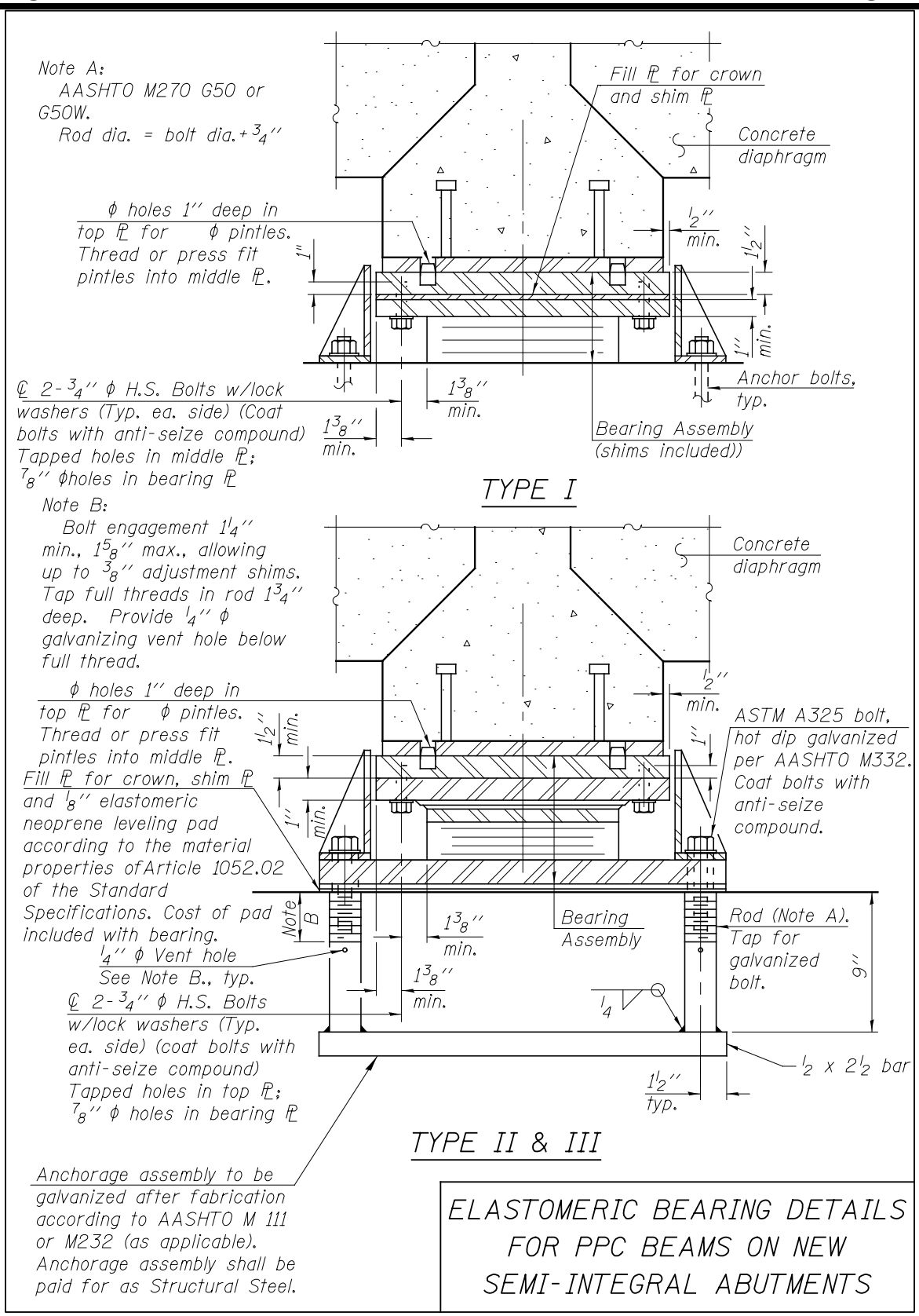

Figure 3.7.4-17

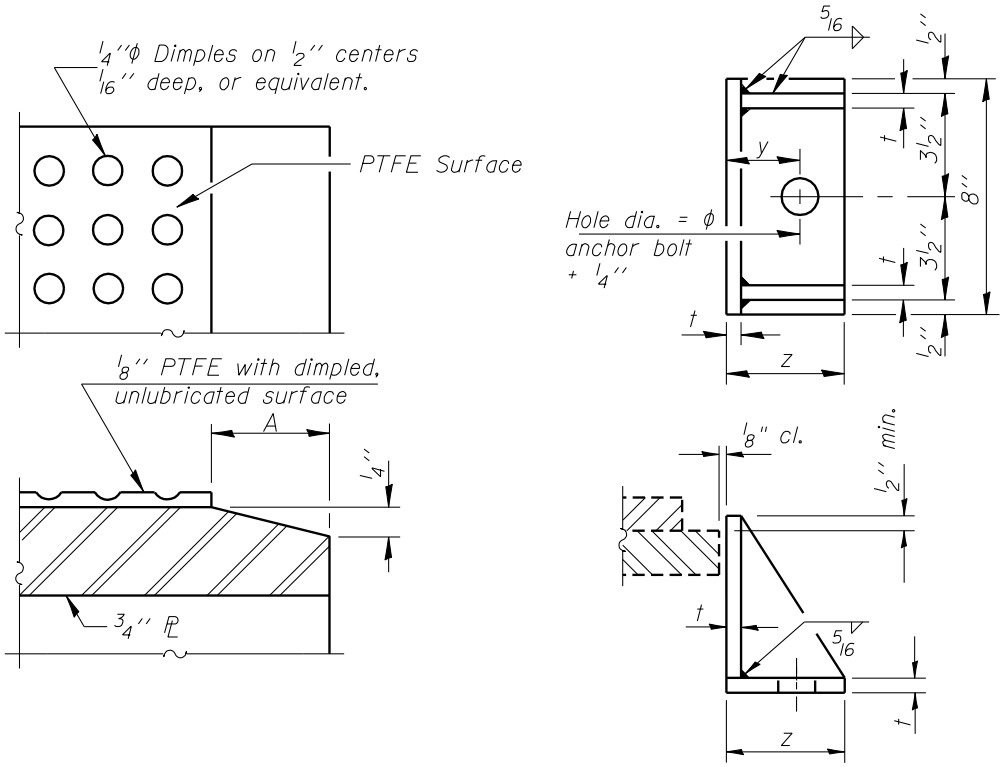

SIDE RETAINER

W_e	6"	7"	9"	10"	11"	12"	13"	14"	15"
A	1"	1"	1 1/2"	1 1/2"	1 1/2"	1 1/2"	1 1/2"	1 1/2"	1 1/2"

Note: The 1/8" PTFE sheet shall be bonded directly to the top steel plate with a two-component, medium viscosity epoxy resin, conforming to the requirements of the Federal Specification MMM-A-134, Type I. The bond agent shall be applied on the full area of the contact surfaces.

Bolt ϕ	y	z	t
5/8"	1 3/4"	3 1/16"	1/2"
3/4"	1 7/8"	3 3/8"	1/2"
1"	2 1/8"	4"	1/2"
1 1/4"	2 3/8"	4 3/4"	1/2"
1 1/2"	2 3/4"	5 1/2"	5/8"
2"	3 1/4"	6 3/8"	5/8"
2 1/2"	3 3/4"	8 1/8"	5/8"

MISCELLANEOUS DETAILS
FOR ELASTOMERIC
EXPANSION BEARINGS

Figure 3.7.4-18

R = Reaction in kips (Service I)
Include impact for top plate only.
C = 0.167 for f_y = 36 ksi.
C = 0.141 for f_y = 50 ksi.

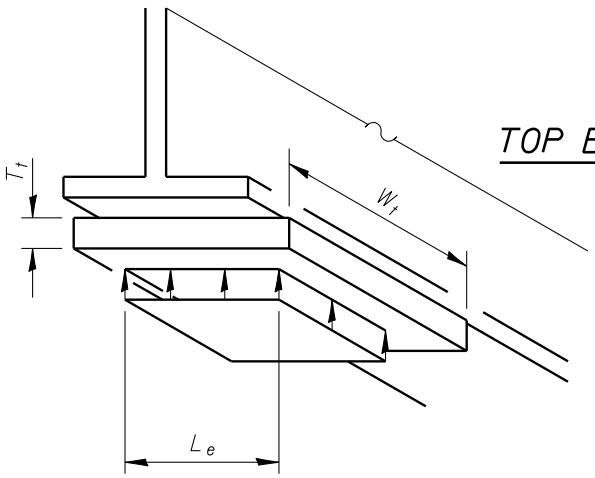

TOP BEARING PLATE THICKNESS

$$*T_t = C\sqrt{\frac{R\,L_e}{W_t}}$$

*With bearing stiffeners use 80% T_t

Minimum T_t = 1½″

BOTTOM BEARING PLATE THICKNESS

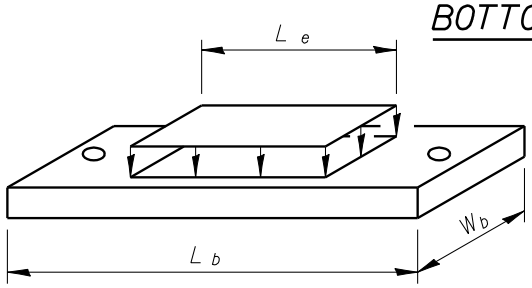

$$T_b = C\,(L_b - L_e)\sqrt{\frac{R}{L_b\,W_b}}$$

Minimum T_b = 1″

For Type III bearings, See Figure 3.7.4-23 for mininum T_b values for bearing.

ELASTOMERIC
BEARING PLATE DESIGN

Figure 3.7.4-19

Load Capacity and Shape Factor -
Type 1, 2, and 3 Bearings

Bearing Size (in.)	Type 1 and 2 (in kips) PSI				Type 3 (in kips) PSI			
	200	500	800	S.F.	200	500	800	S.F.
6 x 10	12.0	30.0	48.0	6.00	11.7	29.1	46.6	5.08
7 x 12	16.8	42.0	67.2	5.89	16.5	41.1	65.8	5.13
9 x 12	21.6	54.0	86.4	6.86	21.1	52.8	84.5	5.93
10 x 14	28.0	70.0	112.0	6.67	27.5	68.8	110.0	5.88
11 x 16	35.2	88.0	140.8	6.52	34.6	86.4	138.3	5.73
12 x 18	43.2	108.0	172.8	6.40	42.6	106.4	170.3	5.71
13 x 20	52.0	130.0	208.0	6.30	51.4	128.4	205.5	5.69
14 x 22	61.6	154.0	246.4	6.22	61.0	152.4	243.9	5.66
15 x 24	72.0	180.0	288.0	6.15	71.4	178.4	285.5	5.65

LOAD CAPACITY AND SHAPE FACTOR TYPE 1, 2, AND 3 BEARINGS

Figure 3.7.4-20

Bearing	W_e	L_e	T_p	N_p	T_s	N_s	ERT	T_e	Slope Max. %
6-a	6"	10"	5/16"	3	14 ga.	2	0.94"	1-1/16"	1.83
6-b	6"	10"	5/16"	5	14 ga.	4	1.56"	1-7/8"	3.12
6-c	6"	10"	5/16"	6	14 ga.	5	1.88"	2-1/4"	3.75
7-a	7"	12"	3/8"	3	3/32"	2	1.13"	1-5/16"	1.93
7-b	7"	12"	3/8"	4	3/32"	3	1.50"	1-3/4"	2.57
7-c	7"	12"	3/8"	5	3/32"	4	1.88"	2-1/4"	3.21
9-a	9"	12"	3/8"	5	3/32"	4	1.88"	2-1/4"	2.50
9-b	9"	12"	3/8"	7	3/32"	6	2.63"	3- 3/16"	3.50
9-c	9"	12"	3/8"	8	3/32"	7	3.00"	3-5/8"	4.00
10-a	10"	14"	7/16"	5	1/8"	4	2.19"	2-11/16"	2.62
10-b	10"	14"	7/16"	6	1/8"	5	2.63"	3-1/4"	3.15
10-c	10"	14"	7/16"	7	1/8"	6	3.06"	3-13/16"	3.68
10-d	10"	14"	7/16"	8	1/8"	7	3.50"	4-3/8"	4.20
11-a	11"	16"	1/2"	4	1/8"	3	2.00"	2-3/8"	2.18
11-b	11"	16"	1/2"	5	1/8"	4	2.50"	3-0"	2.73
11-c	11"	16"	1/2"	6	1/8"	5	3.00"	3-5/8"	3.27
11-d	11"	16"	1/2"	7	1/8"	6	3.50"	4-1/4"	3.82
12-a	12"	18"	9/16"	3	3/16"	2	1.69"	2-1/16"	1.69
12-b	12"	18"	9/16"	4	3/16"	3	2.25"	2-13/16"	2.25
12-c	12"	18"	9/16"	5	3/16"	4	2.81"	3-9/16"	2.81
12-d	12"	18"	9/16"	6	3/16"	5	3.38"	4-5/16"	3.38
12-e	12"	18"	9/16"	7	3/16"	6	3.94"	5-1/16"	3.94
13-a	13"	20"	5/8"	3	3/16"	2	1.88"	2-1/4"	1.73
13-b	13"	20"	5/8"	4	3/16"	3	2.50"	3-1/16"	2.31
13-c	13"	20"	5/8"	5	3/16"	4	3.13"	3-7/8"	2.88
13-d	13"	20"	5/8"	6	3/16"	5	3.75"	4-11/16"	3.46
13-e	13"	20"	5/8"	7	3/16"	6	4.38"	5-1/2"	4.04
14-a	14"	22"	11/16"	3	3/16"	2	2.06"	2-7/16"	1.77
14-b	14"	22"	11/16"	4	3/16"	3	2.75"	3-5/16"	2.36
14-c	14"	22"	11/16"	5	3/16"	4	3.44"	4-3/16"	2.95
14-d	14"	22"	11/16"	6	3/16"	5	4.13"	5-1/16"	3.54
14-e	14"	22"	11/16"	7	3/16"	6	4.81"	5-15/16"	4.13
15-a	15"	24"	3/4"	3	3/16"	2	2.25"	2-5/8"	1.80
15-b	15"	24"	3/4"	4	3/16"	3	3.00"	3-9/16"	2.40
15-c	15"	24"	3/4"	5	3/16"	4	3.75"	4-1/2"	3.00
15-d	15"	24"	3/4"	6	3/16"	5	4.50"	5-7/16"	3.60
15-e	15"	24"	3/4"	7	3/16"	6	5.25"	6-3/8"	4.20

TABLE OF DIMENSIONS
TYPE 1 BEARING

Figure 3.7.4-21

Bearing	W_e	L_e	T_p	N_p	T_s	N_s	ERT	T_e
6-a	6"	10"	5/16"	3	14 ga.	2	0.94"	1-15/16"
6-b	6"	10"	5/16"	5	14 ga.	4	1.56"	2-3/4"
6-c	6"	10"	5/16"	6	14 ga.	5	1.88"	3-1/8"
7-a	7"	12"	3/8"	3	3/32"	2	1.13"	2-3/16"
7-b	7"	12"	3/8"	4	3/32"	3	1.50"	2-5/8"
7-c	7"	12"	3/8"	5	3/32"	4	1.88"	3-1/8"
9-a	9"	12"	3/8"	5	3/32"	4	1.88"	3-1/8"
9-b	9"	12"	3/8"	7	3/32"	6	2.63"	4-1/16"
9-c	9"	12"	3/8"	8	3/32"	7	3.00"	4-1/2"
10-a	10"	14"	7/16"	5	1/8"	4	2.19"	3-9/16"
10-b	10"	14"	7/16"	6	1/8"	5	2.63"	4-1/8"
10-c	10"	14"	7/16"	7	1/8"	6	3.06"	4-11/16"
10-d	10"	14"	7/16"	8	1/8"	7	3.50"	5-1/4"
11-a	11"	16"	1/2"	4	1/8"	3	2.00"	3-1/4"
11-b	11"	16"	1/2"	5	1/8"	4	2.50"	3-7/8"
11-c	11"	16"	1/2"	6	1/8"	5	3.00"	4-1/2"
11-d	11"	16"	1/2"	7	1/8"	6	3.50"	5-1/8"
12-a	12"	18"	9/16"	3	3/16"	2	1.69"	2-15/16"
12-b	12"	18"	9/16"	4	3/16"	3	2.25"	3-11/16"
12-c	12"	18"	9/16"	5	3/16"	4	2.81"	4-7/16"
12-d	12"	18"	9/16"	6	3/16"	5	3.38"	5-3/16"
12-e	12"	18"	9/16"	7	3/16"	6	3.94"	5-15/16"
13-a	13"	20"	5/8"	3	3/16"	2	1.88"	3-1/8"
13-b	13"	20"	5/8"	4	3/16"	3	2.50"	3-15/16"
13-c	13"	20"	5/8"	5	3/16"	4	3.13"	4-3/4"
13-d	13"	20"	5/8"	6	3/16"	5	3.75"	5-9/16"
13-e	13"	20"	5/8"	7	3/16"	6	4.38"	6-3/8"
14-a	14"	22"	11/16"	3	3/16"	2	2.06"	3-5/16"
14-b	14"	22"	11/16"	4	3/16"	3	2.75"	4-3/16"
14-c	14"	22"	11/16"	5	3/16"	4	3.44"	5-1/16"
14-d	14"	22"	11/16"	6	3/16"	5	4.13"	5-15/16"
14-e	14"	22"	11/16"	7	3/16"	6	4.81"	6-13/16"
15-a	15"	24"	3/4"	3	3/16"	2	2.25"	3-1/2"
15-b	15"	24"	3/4"	4	3/16"	3	3.00"	4-7/16"
15-c	15"	24"	3/4"	5	3/16"	4	3.75"	5-3/8"
15-d	15"	24"	3/4"	6	3/16"	5	4.50"	6-5/16"
15-e	15"	24"	3/4"	7	3/16"	6	5.25"	7-1/4"

TABLE OF DIMENSIONS
TYPE 2 AND 3 BEARING

Figure 3.7.4-22

Bearing	T_b*	D_p	D_s	H_p
6-a	1"	1"	1-1/2"	1-1/2"
6-b	1"	1"	1-1/2"	2-1/4"
6-c	1"	1"	1-1/2"	2-1/2"
7-a	1"	1"	1-1/2"	1-3/4"
7-b	1"	1"	1-1/2"	2-1/4"
7-c	1-1/4"	1"	1-1/2"	2-1/2"
9-a	1-1/4"	1-1/4"	1-3/4"	2-1/2"
9-b	1-1/2"	1-1/4"	1-3/4"	3-1/2"
9-c	1-3/4"	1-1/4"	1-3/4"	4"
10-a	1-1/2"	1-1/4"	1-3/4"	3"
10-b	1-1/2"	1-1/4"	1-3/4"	3-1/2"
10-c	1-3/4"	1-1/4"	1-3/4"	4-1/4"
10-d	2"	1-1/4"	1-3/4"	4-3/4"
11-a	1-1/2"	1-1/2"	2"	2-3/4"
11-b	1-1/2"	1-1/2"	2"	3-1/4"
11-c	1-3/4"	1-1/2"	2"	4"
11-d	2"	1-1/2"	2"	4-3/4"
12-a	1-1/4"	1-1/2"	2"	2-1/2"
12-b	1-3/4"	1-1/2"	2"	3-1/4"
12-c	2"	1-1/2"	2"	4"
12-d	2"	1-1/2"	2"	4-3/4"
12-e	2-1/4"	1-1/2"	2"	5-1/2"
13-a	1-1/2"	1-1/2"	2"	2-3/4"
13-b	1-3/4"	1-1/2"	2"	3-1/2"
13-c	1-3/4"	1-1/2"	2"	4-1/4"
13-d	2"	1-1/2"	2"	5-1/4"
13-e	2"	1-1/2"	2"	6”
14-a	1-3/4"	1-1/2"	2"	3"
14-b	1-3/4"	1-1/2"	2"	3-3/4"
14-c	2"	1-1/2"	2"	4-3/4"
14-d	2"	1-1/2"	2"	5-1/2"
14-e	2-1/4"	1-1/2"	2"	6-1/2"
15-a	1-3/4"	1-3/4"	2-1/4"	3"
15-b	1-3/4"	1-3/4"	2-1/4"	4"
15-c	2"	1-3/4"	2-1/4"	5"
15-d	2-1/4"	1-3/4"	2-1/4"	6"
15-e	2-1/4"	1-3/4"	2-1/4"	6-3/4"

- The * T_b thickness for the 12-series bearings and smaller are based on the minimum thickness required for the seating restrictor pin.
- The * T_b thickness for the 13-series and larger bearings are governed by the bearing stress of the pin to plate assuming a bottom plate with a yield strength of 36 ksi.
- $H_p = T_e$ – ((3/4 ÷ 2) + 1/8”) then round up to nearest inch, ¼”, ½” or ¾”

TABLE OF DIMENSIONS TYPE 3 BEARING

Figure 3.7.4-23

LRFD and LFD

The three types of HLMR bearings are fixed, guided expansion and non-guided expansion. Figure 3.7.5-1 presents an illustrative example of typical Contract plan details for fixed HLMR bearings. Typical details for guided expansion HLMR bearings are given in Figure 3.7.5-2. A non-guided expansion HLMR bearing is rarely applicable and, as such, is reserved for unique cases. If employed, it would be detailed similar to a guided expansion HLMR bearing without guide bars. In no case is an inverted HLMR bearing allowed.

The Department's Special Provision for HLMR bearings describes material, fabrication, installation and testing requirements for all types of HLMR bearings.

The following information shall be provided by the designer on the Contract plans near the bearing details for HLMR bearings:

1. Vertical Design Load – Total service axial DL + LL without impact for LRFD and LFD. Note that Service Load Case I (Load Factor = 1.0) is used for LRFD
2. Lateral Design Loads
   a. LRFD
      i. H_u = The larger of the Factored Ultimate (Strength) Design Lateral Load or 20% of the vertical service design load
      ii. θ_u = Maximum Factored Ultimate (Strength) Design Rotation
   b. LFD
      i. H_s = The larger of the Service Design Lateral Load or 20% of the vertical service design load
      ii. θ_s = Maximum Service Design Rotation
3. Total Required Movement
4. L = Transverse length of the piston
5. D = Outside pot diameter
6. T_t = Thickness of top plate
7. T_b = Thickness of bottom plate
8. T_h = Total height of bearing assembly

Plate thicknesses T_t and T_b shall be determined according to Figure 3.7.4-19. T_t shall be calculated based on the "L" dimension shown and T_b shall be calculated based on the diameter "D" dimension shown. If the pot is recessed into the bottom bearing plate, the thickness of the bottom plate shall be T_b plus the depth of the recess.

The IDOT policy for treatment of vertical bearing loads for HLMR and elastomeric bearings using the LRFD Code is analogous. When determining the plate thicknesses T_b and T_t, Load Case Service I using the HL-93 loading shall be used for determining the vertical reaction. See Section 3.7.4.

It is the designer's responsibility to specify HLMR bearing dimensions consistent with producers who can satisfy the AASHTO and Department design and geometry requirements. The overall bearing height and plate thicknesses stated on the Contract plans shall be chosen such that more than one producer is capable of bidding on the project.

Most companies that supply HLMR bearings use standardized bearing dimensions which are designed to provide a lateral resistance of 10% of the total service axial load capacity. If the service lateral design load is greater than (>) 10% but less than or equal to (≤) 20% of the design vertical load, a larger HLMR bearing may be selected based upon the lateral load. When service lateral design load exceeds a threshold value of 20% of the vertical design load, the designer should not select a significantly larger HLMR bearing to satisfy the lateral load requirement. Rather, designers should select a HLMR bearing size based on the vertical design load and the fabricator shall be responsible for modifying any necessary components of the bearing to meet the lateral load and expansion length demands for LRFD or LFD as applicable.

Note that HLMR bearings and their connections to the substructure (anchor bolts) are intended to act as fuses during an earthquake just as elastomeric and fixed bearings are according to the Department's ERS philosophy. The lateral earthquake design force for SPZ 1 to 4 (LRFD) or SPC A to D (LFD) is 20% of the dead load reaction as described previously in Section 3.7.3 according to Departmental policy. Usually, this load is less than 10% of the total service vertical design load. HLMR bearing connections to the substructure should be designed for the greater of the earthquake (20% of dead load reaction) or service design lateral force for the HLMR bearing according to Section 3.7.3.

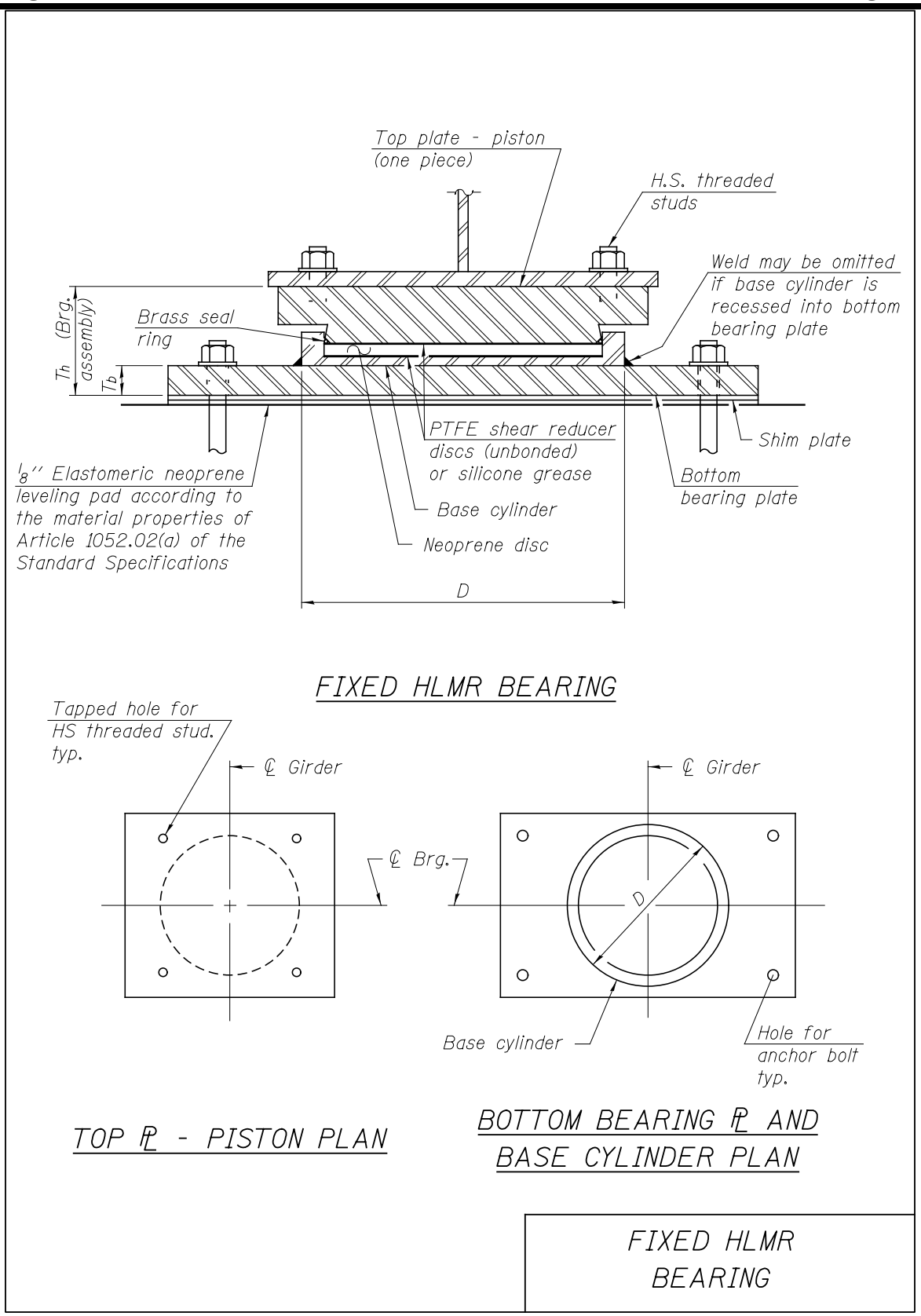
Top plate - piston
(one piece)
H.S. threaded
studs
Weld may be omitted
if base cylinder is
recessed into bottom
bearing plate
Th (Brg. assembly)
Brass seal
ring
Tb
PTFE shear reducer
discs (unbonded)
or silicone grease
Shim plate
1/8" Elastomeric neoprene
leveling pad according to
the material properties of
Article 1052.02(a) of the
Standard Specifications
Bottom
bearing plate
Base cylinder
Neoprene disc
D
FIXED HLMR BEARING
Tapped hole for
HS threaded stud.
typ.
℄ Girder
℄ Girder
℄ Brg.
D
Base cylinder
Hole for
anchor bolt
typ.
TOP ℙ - PISTON PLAN
BOTTOM BEARING ℙ AND
BASE CYLINDER PLAN
FIXED HLMR
BEARING

Figure 3.7.5-1

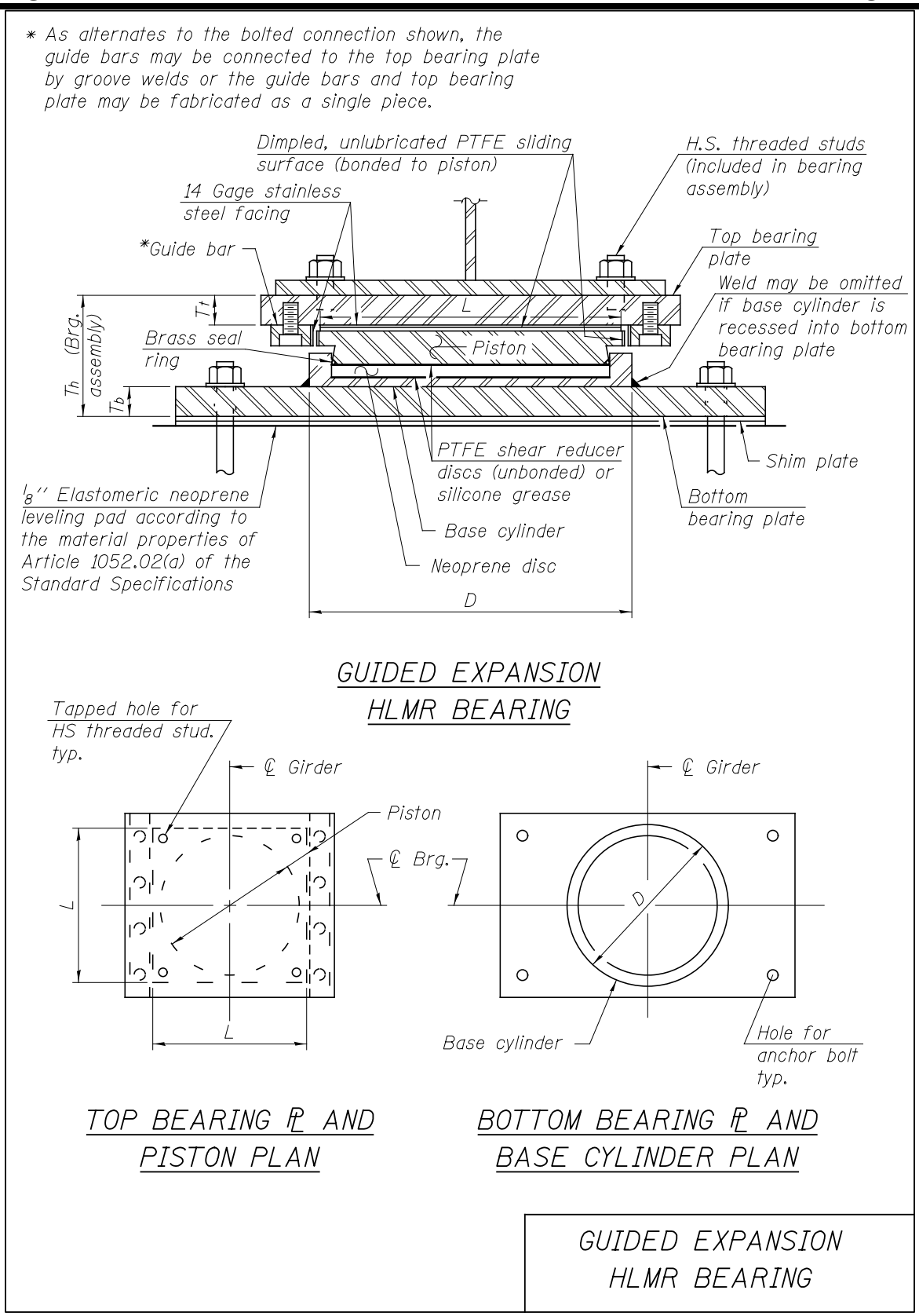
* As alternates to the bolted connection shown, the guide bars may be connected to the top bearing plate by groove welds or the guide bars and top bearing plate may be fabricated as a single piece.
Dimpled, unlubricated PTFE sliding surface (bonded to piston)
H.S. threaded studs (included in bearing assembly)
14 Gage stainless steel facing
*Guide bar
Top bearing plate
Weld may be omitted if base cylinder is recessed into bottom bearing plate
Th (Brg. assembly)
Tt
L
Brass seal ring
Piston
Tb
PTFE shear reducer discs (unbonded) or silicone grease
Shim plate
1/8" Elastomeric neoprene leveling pad according to the material properties of Article 1052.02(a) of the Standard Specifications
Bottom bearing plate
Base cylinder
Neoprene disc
D
GUIDED EXPANSION HLMR BEARING
Tapped hole for HS threaded stud. typ.
℄ Girder
Piston
℄ Brg.
L
L
℄ Girder
D
Base cylinder
Hole for anchor bolt typ.
TOP BEARING ℄ AND PISTON PLAN
BOTTOM BEARING ℄ AND BASE CYLINDER PLAN
GUIDED EXPANSION HLMR BEARING

Figure 3.7.5-2

3.8 Abutments

3.8.1 General

LRFD and LFD

Common abutment types built in Illinois fall into three main categories. These are open, closed, and vaulted. Historically, open abutments have also been referred to as pile bent or spill through. Vaulted abutments are of two types, filled and unfilled. The open category includes integral, semi-integral and stub abutments. Technical details, policies and procedures for the design of each of these common abutments types built in Illinois are contained in the sections below.

The dynamic load allowance (impact) shall not be included in the design of elements below the bearing. Impact, however, shall be included in both the substructures and foundations when the superstructure is poured monolithically with the substructure(s) on which it bears.

If the length of an abutment is greater than 90 ft., a 1 in. expansion relief joint should be located between bearings near mid-length. On stage constructed abutments, a total width of 120 ft. or less may be permitted without requiring a 1 in. expansion joint. The base of an abutment under a superelevated roadway shall be constructed level if the difference between the low and high elevation of the bridge seat is 1 ft. – 6 in. or less. For a difference in elevation greater than 1 ft. – 6 in., the base of the abutment cap shall be stepped with the reinforcement continuous through the transitions. The base of the abutment cap shall always remain level in areas other than sloped transitions.

Abutments under deck joints shall have all exposed surfaces of backwalls, bridge seats, and front faces of pile caps treated with Concrete Sealer. For cases involving both existing and new concrete, such as structure widening, Concrete Sealer shall only be applied to new concrete.

3.8.2 Reinforcement

For Interstate, primary route and grade separation structures, all reinforcement bars in abutment elements shall be epoxy coated.

Placement of reinforcement in abutment caps shall be detailed so as not to interfere with anchor rod locations. Multiple reinforcement layers should be considered to alleviate congestion.

3.8.3 Open Abutments: Integral

The preferred open abutment type for bridges built in Illinois is integral if the limitations detailed in Section 2.3.6.2.1 are satisfied. Use of integral abutments on structures beyond these limitations requires approval of the BBS. Typically, this entails detailed soil/structure interaction studies which prove the acceptability of a proposed design.

Bridges designed with expansion joints and other structural releases allow the superstructure to expand and contract freely with changing temperatures. Integral abutment bridges eliminate expansion joints at the ends of bridge decks. Analysis of the thermal forces introduced into bridge elements when expansion joints and other structural releases are omitted is not required on structures which meet the limitations of Section 2.3.6.2.1.

When utilizing integral abutments, the following design considerations should be made:

1. All abutments shall be provided with “dog-ear” type wingwalls. The length of these wingwalls shall be limited to 10 ft. If wingwall lengths greater than 10 ft. are required, the dog-ear wingwall lengths should extend to 10 ft. with the remaining “wing extension” lengths retained by independent walls, gabions, or rip rap that allows soil to wrap around wingwalls as shown in Figure 3.8.3-1. As shown on the Base Sheets, the wingwalls on skewed structures are typically placed parallel to the centerline of the abutment; however, they may be placed at acute angles to the centerline of the roadway as required with slopes not to exceed 2:1. For design, k_0 (earth pressure at rest) = 0.5 should be used and the equivalent fluid pressure should be 60 pcf.
2. The abutment backfill shall be well drained and compacted. See Figure 3.8.3-2 for details of abutment and backfill.
3. Foundation shall consist of a single row of vertical H-piles or Metal Shell (MS) piles.
    a. For bridge lengths up to 90 ft., H-piles, 12 in. MS piles and 14 in. MS piles are permitted.
    b. For bridge lengths between 90 and 200 ft., H-piles and 14 in. MS piles are permitted.
    c. For bridge lengths between 200 and 410 ft., H-piles are permitted.

See Section 3.10.1 for information on the design of piles.

4. Pile encasements shall be provided for abutments with steel H-piles as shown on Base Sheet F-HP.

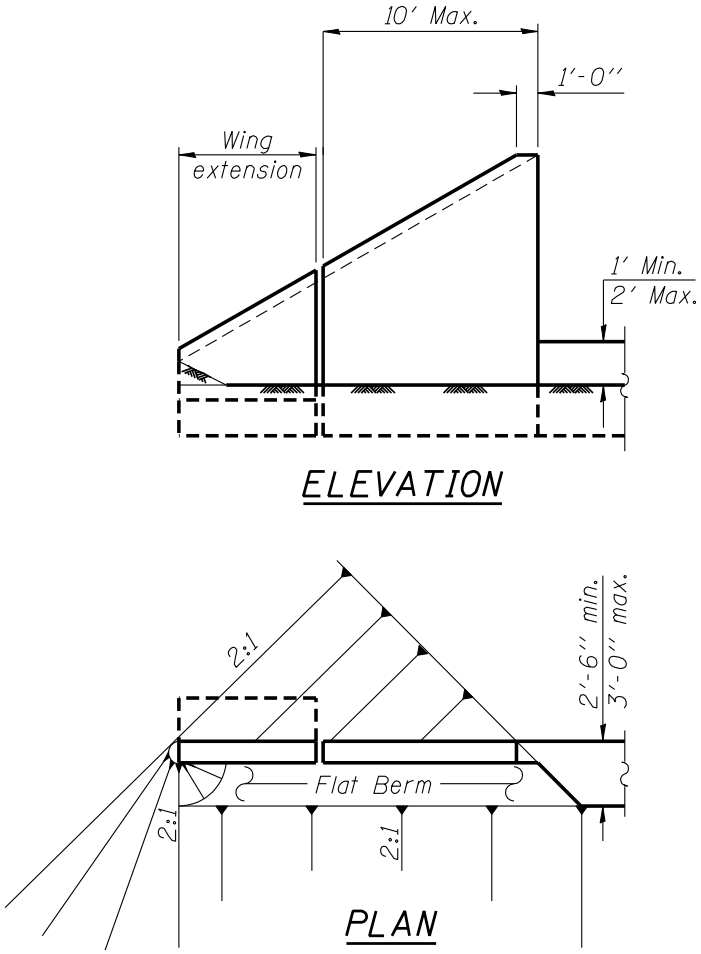

Figure 3.8.3-1

5. Pile reinforcement shall be provided in all metal shell piles at abutments as shown on Base Sheet F-MS.
6. H-piles shall have their strong axis oriented to the centerline of the abutment as shown in Figure 3.8.3-3 and embedded 2 ft. minimum into the cap. Design reactions for the piles and abutment shall include impact. Integral abutments shall have only one row of piles.
7. Steel beams shall be detailed as shown in Figure 3.8.3-4. Steel beams shall be set on 2 in. thick steel rocker plates. The rocker plate shall be the width of the bottom beam flange.

The rocker plates have two 1 ½ in. ϕ holes for the 1 in. ϕ x 12 in. anchor bolts. The rocker plates shall be detailed on the plans similar to Figure 3.7.1.2-2. Shallow steel beams (W 27 and smaller) shall be detailed as shown in Figure 3.8.3-5.

8. PPC I-beams shall be detailed as shown in Figure 3.8.3-6. PPC I-beams shall be set on an initial ½ in. minimum grout (2:1 sand and Portland cement, very dry mix) to provide full bearing. Any excess grout squeezed out from under the beam shall be removed.
9. To ensure stability during construction, cross frames/diaphragms shall be provided near the abutments for all steel plate girders. The cross frames/diaphragms shall be placed 2 ft. into the span from the inside face of the concrete diaphragm.
10. The superstructure shall be connected to the abutment cap with a minimum of #5 bars at 12 in. cts. See Figures 3.8.3-4 to 3.8.3-6.
11. The bridge deck shall be connected to the approach slab with bar splicers for #5 bars at 12 in. cts. See Figures 3.8.3-4 to 3.8.3-6.
12. Beam location details on integral abutments are shown in Figure 3.8.3-7.

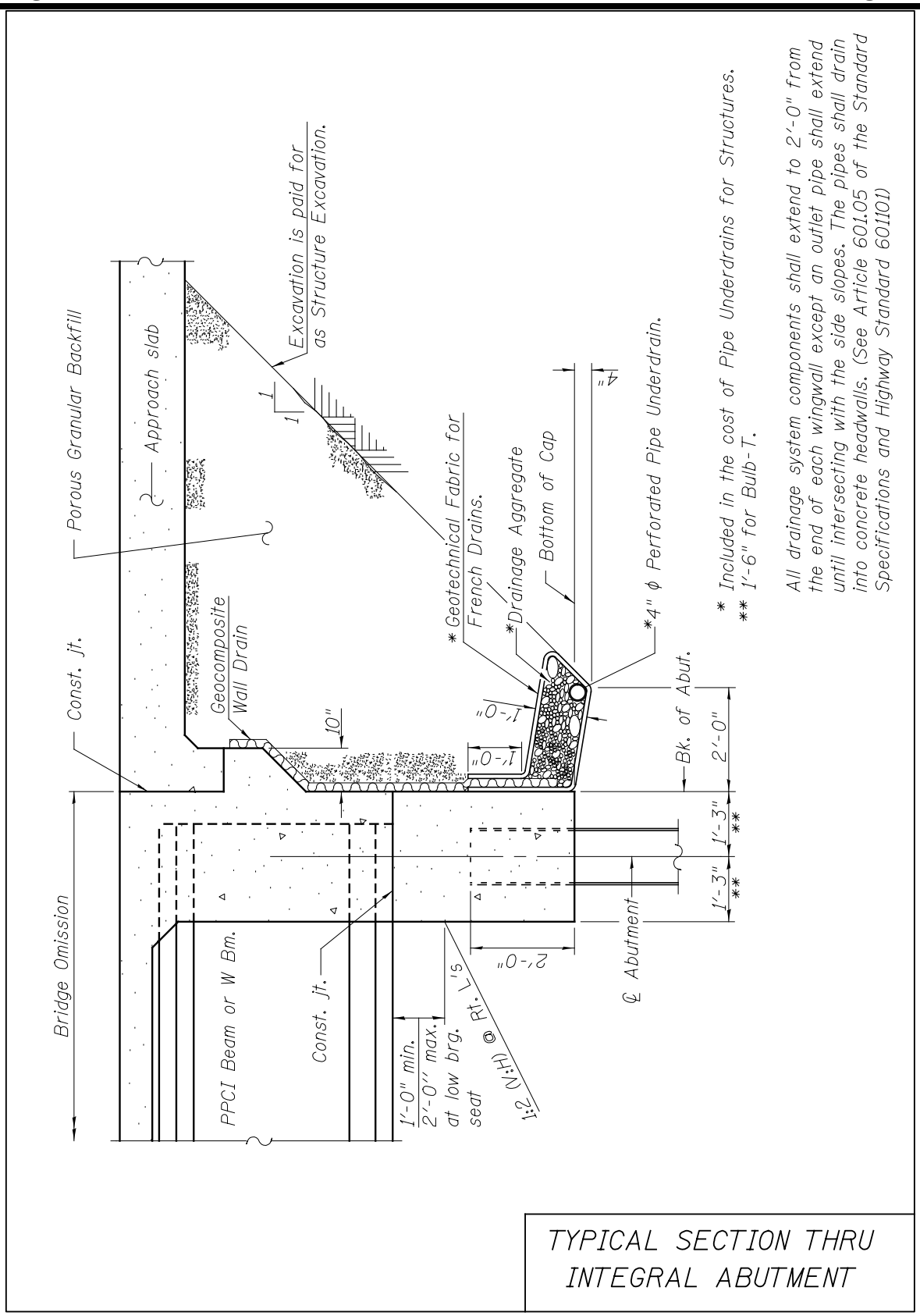
Porous Granular Backfill
Approach slab
Excavation is paid for as Structure Excavation.
1
1
Const. jt.
Geocomposite Wall Drain
10"
* Geotechnical Fabric for French Drains.
*Drainage Aggregate
Bottom of Cap
*4" ϕ Perforated Pipe Underdrain.
4"
1'-0"
1'-0"
* Included in the cost of Pipe Underdrains for Structures.
** 1'-6" for Bulb-T.
All drainage system components shall extend to 2'-0" from the end of each wingwall except an outlet pipe shall extend until intersecting with the side slopes. The pipes shall drain into concrete headwalls. (See Article 601.05 of the Standard Specifications and Highway Standard 601101)
Bridge Omission
PPCI Beam or W Bm.
Const. jt.
1'-0" min.
2'-0" max. at low brg. seat
1:2 (V:H) @ Rt. ∠'s
2'-0"
℄ Abutment
Bk. of Abut.
2'-0"
1'-3" **
1'-3" **
TYPICAL SECTION THRU INTEGRAL ABUTMENT

Figure 3.8.3-2

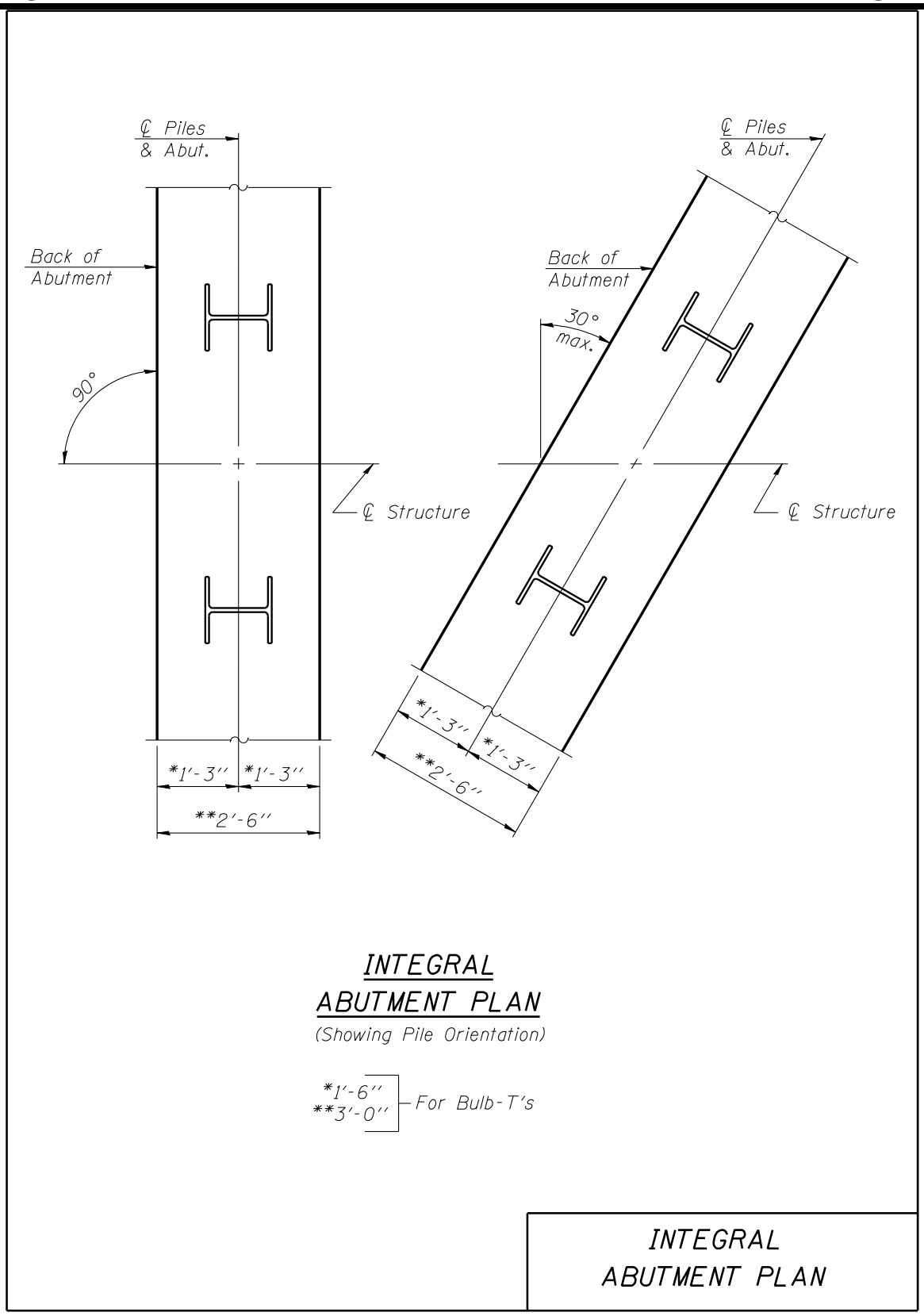
℄ Piles
& Abut.
Back of
Abutment
90°
℄ Structure
*1'-3"
*1'-3"
**2'-6"
℄ Piles
& Abut.
Back of
Abutment
30°
max.
℄ Structure
*1'-3"
*1'-3"
**2'-6"
INTEGRAL
ABUTMENT PLAN
(Showing Pile Orientation)
*1'-6"
**3'-0"
For Bulb-T's
INTEGRAL
ABUTMENT PLAN

Figure 3.8.3-3

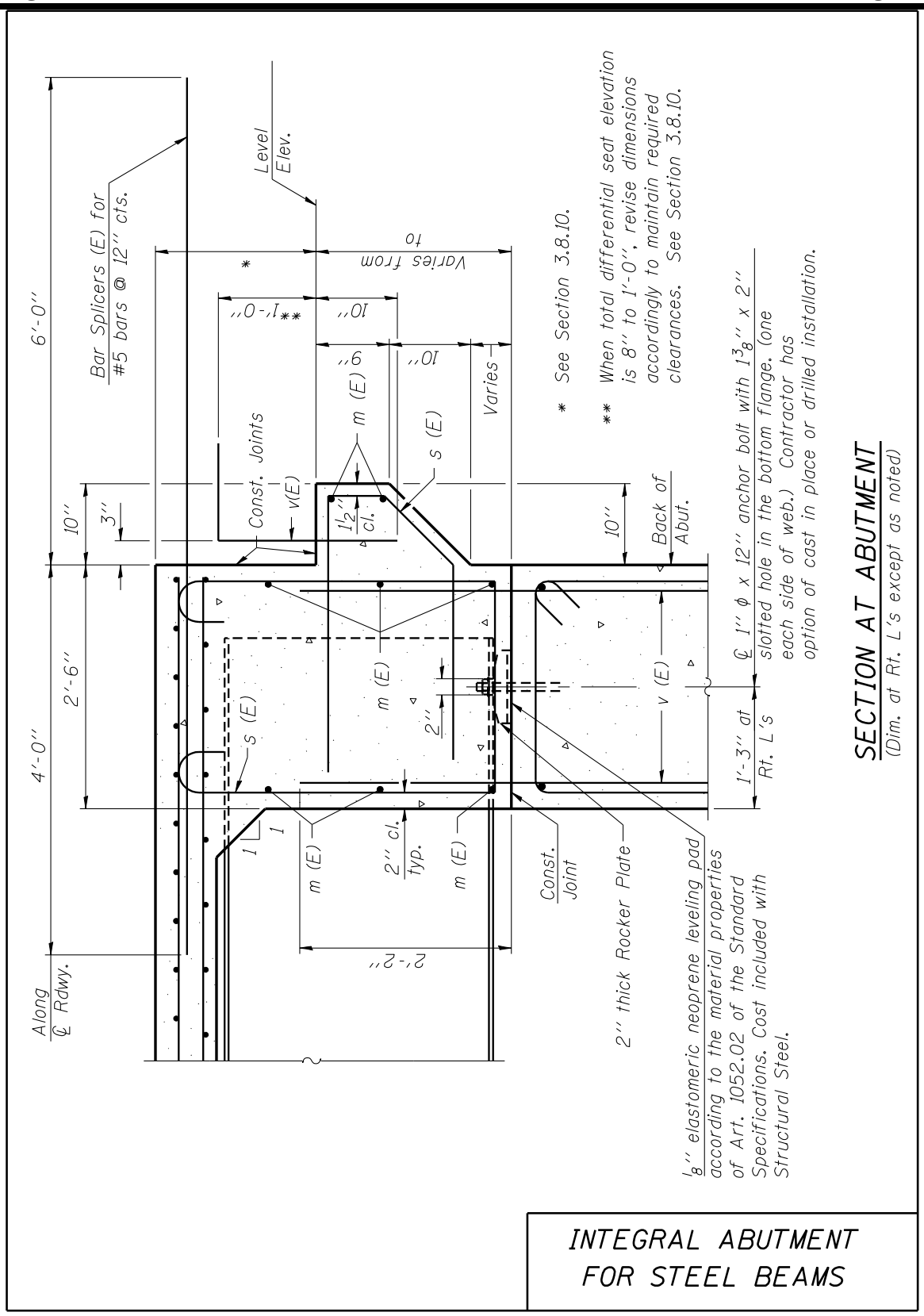
6'-0"
Bar Splicers (E) for
#5 bars @ 12" cts.
Level
Elev.
Varies from
to
*
**1'-0"
10"
9"
10"
Varies
m (E)
s (E)
Const. Joints
v(E)
1½"
cl.
3"
10"
10"
Back of
Abut.
4'-0"
2'-6"
s (E)
m (E)
2"
v (E)
1'-3" at
Rt. L's
1
1
m (E)
2" cl.
typ.
m (E)
Const.
Joint
2'-2"
Along
℄ Rdwy.
* See Section 3.8.10.
** When total differential seat elevation is 8" to 1'-0", revise dimensions accordingly to maintain required clearances. See Section 3.8.10.
℄ 1" ϕ x 12" anchor bolt with 1⅜" x 2" slotted hole in the bottom flange. (one each side of web.) Contractor has option of cast in place or drilled installation.
2" thick Rocker Plate
⅛" elastomeric neoprene leveling pad according to the material properties of Art. 1052.02 of the Standard Specifications. Cost included with Structural Steel.
SECTION AT ABUTMENT
(Dim. at Rt. L's except as noted)
INTEGRAL ABUTMENT
FOR STEEL BEAMS

Figure 3.8.3-4

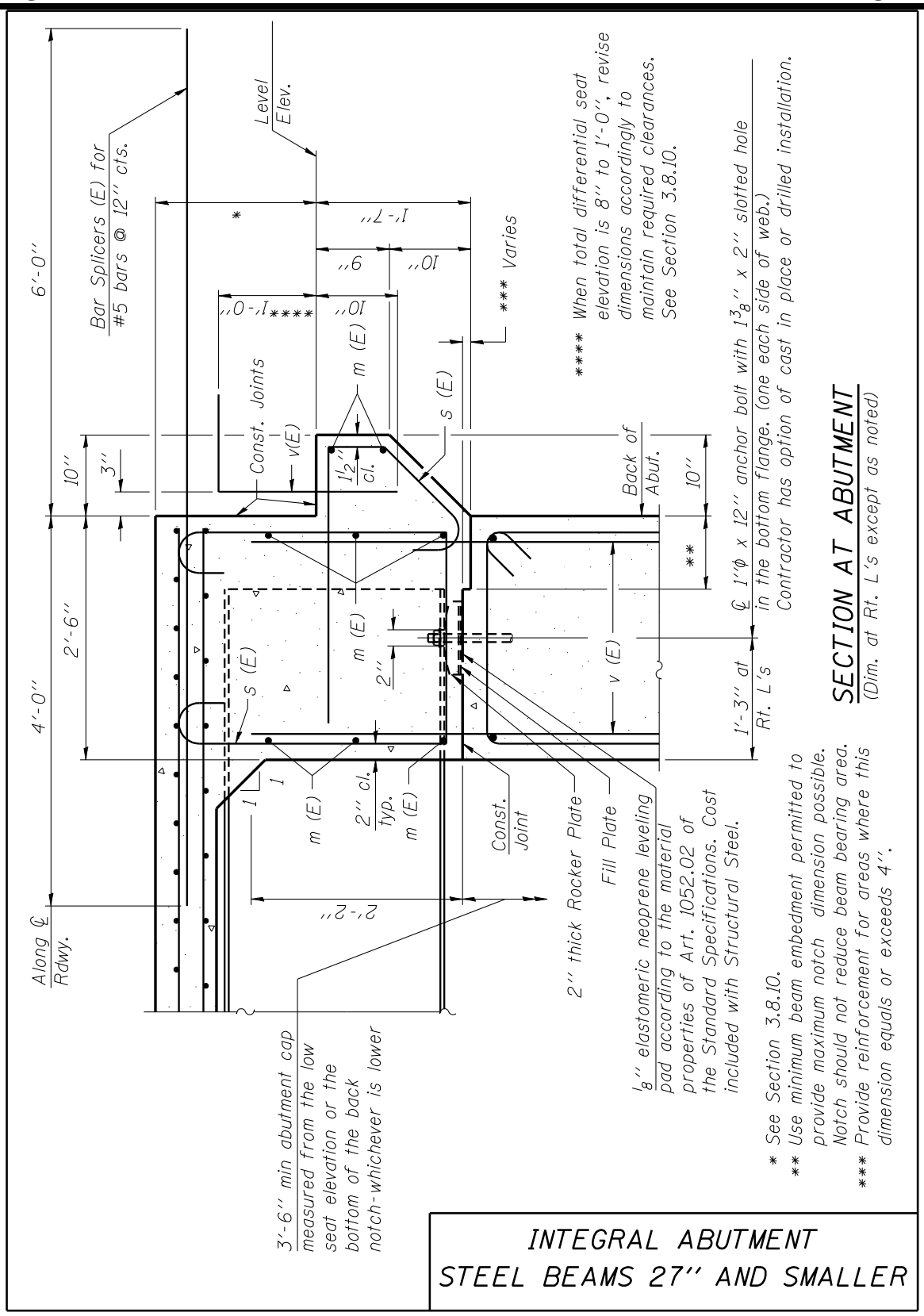
6'-0"
Bar Splicers (E) for
#5 bars @ 12" cts.
Level
Elev.
*
1'-7"
9"
10"
10"
1'-0"****
*** Varies
**** When total differential seat
elevation is 8" to 1'-0", revise
dimensions accordingly to
maintain required clearances.
See Section 3.8.10.
m (E)
s (E)
Const. Joints
v(E)
1½" cl.
10"
3"
Back of
Abut.
10"
**
℄ 1"ϕ x 12" anchor bolt with 1⅜" x 2" slotted hole
in the bottom flange. (one each side of web.)
Contractor has option of cast in place or drilled installation.
2'-6"
4'-0"
s (E)
m (E)
2"
v (E)
1'-3" at
Rt. L's
SECTION AT ABUTMENT
(Dim. at Rt. L's except as noted)
1
1
m (E)
2" cl.
typ.
m (E)
Const.
Joint
Fill Plate
2" thick Rocker Plate
⅛" elastomeric neoprene leveling
pad according to the material
properties of Art. 1052.02 of
the Standard Specifications. Cost
included with Structural Steel.
2'-2"
Along ℄
Rdwy.
3'-6" min abutment cap
measured from the low
seat elevation or the
bottom of the back
notch-whichever is lower
* See Section 3.8.10.
** Use minimum beam embedment permitted to
provide maximum notch dimension possible.
Notch should not reduce beam bearing area.
*** Provide reinforcement for areas where this
dimension equals or exceeds 4".
INTEGRAL ABUTMENT
STEEL BEAMS 27" AND SMALLER

Figure 3.8.3-5

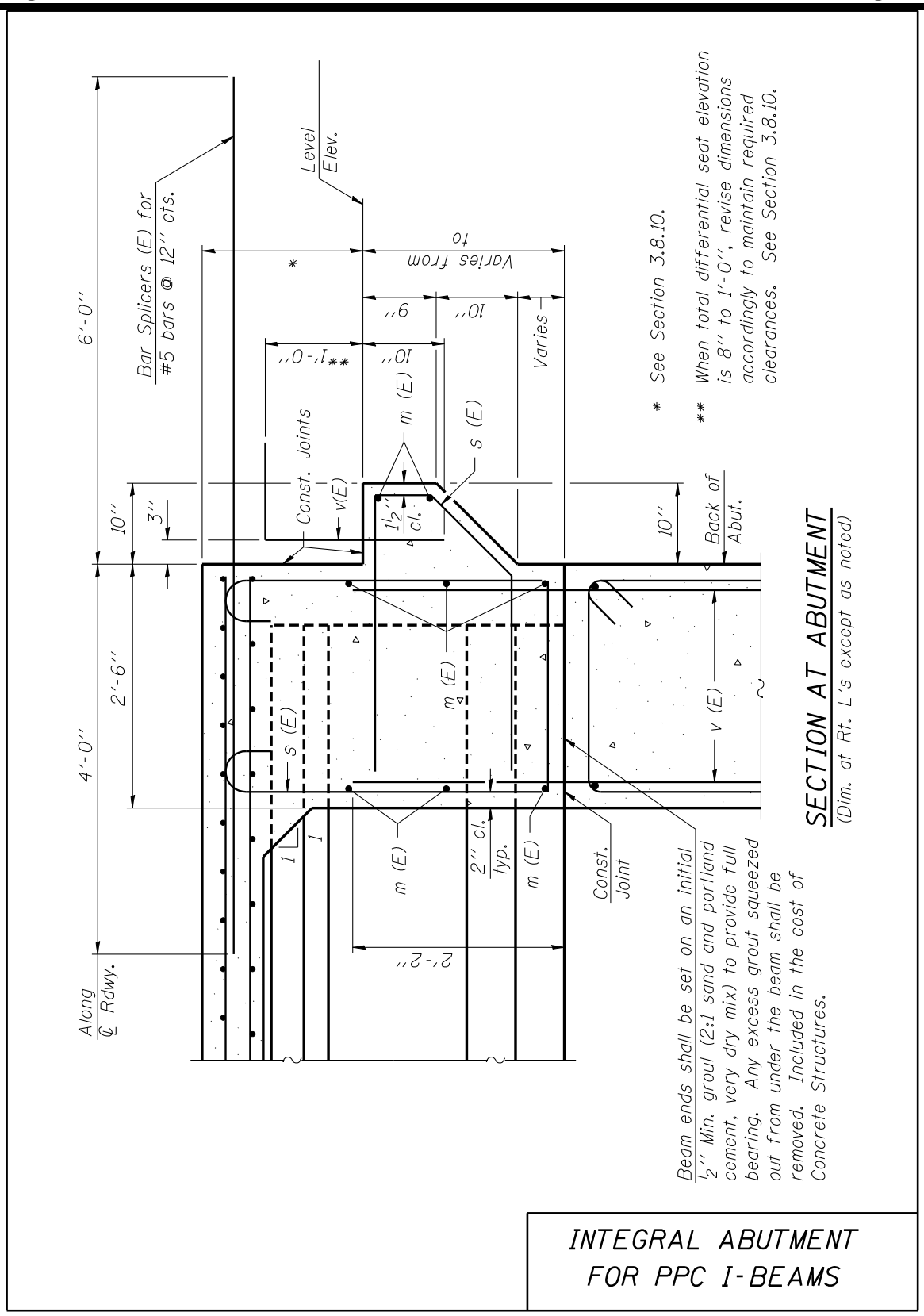
6'-0"
Bar Splicers (E) for
#5 bars @ 12" cts.
Level
Elev.
Varies from
*
9"
10"
10"
Varies
**1'-0"
10"
m (E)
s (E)
Const. Joints
v(E)
1½"
cl.
10"
3"
10"
Back of
Abut.
4'-0"
2'-6"
s (E)
m (E)
v (E)
1
1
m (E)
2" cl.
typ.
m (E)
Const.
Joint
2'-2"
Along
℄ Rdwy.
* See Section 3.8.10.
** When total differential seat elevation is 8" to 1'-0", revise dimensions accordingly to maintain required clearances. See Section 3.8.10.
Beam ends shall be set on an initial ½" Min. grout (2:1 sand and portland cement, very dry mix) to provide full bearing. Any excess grout squeezed out from under the beam shall be removed. Included in the cost of Concrete Structures.
SECTION AT ABUTMENT
(Dim. at Rt. L's except as noted)
INTEGRAL ABUTMENT
FOR PPC I-BEAMS

Figure 3.8.3-6

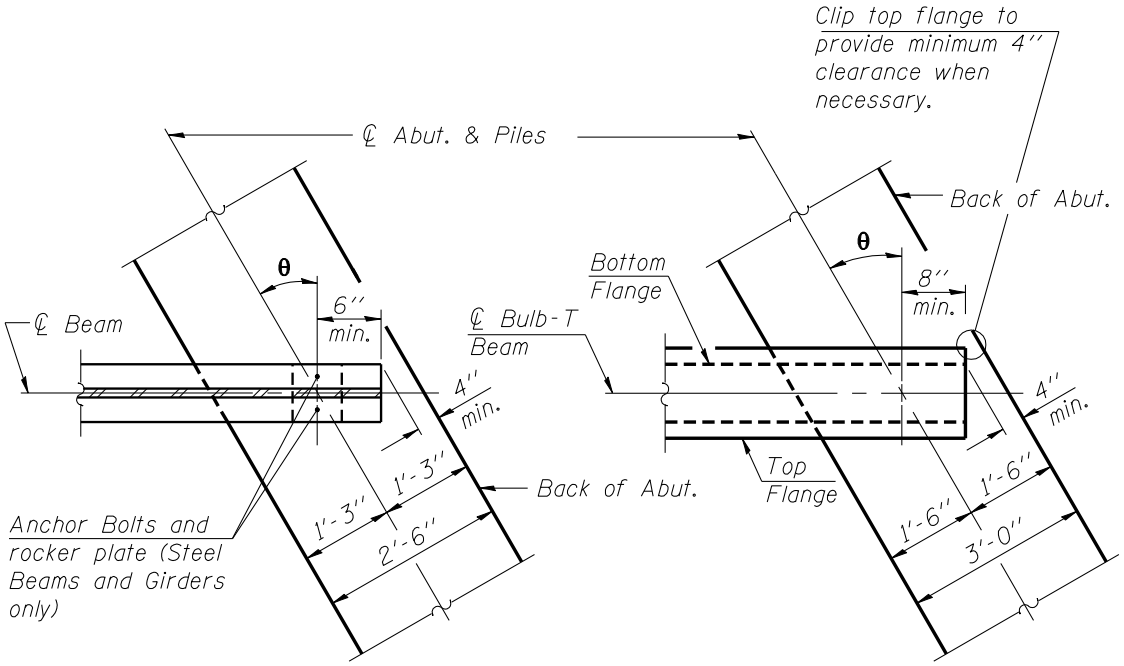

WIDE FLANGE BEAMS
PLATE GIRDERS
AND PPC I-BEAMS

BULB T-BEAMS

θ = Skew

INTEGRAL ABUTMENT
BEAM LOCATION
PLAN VIEW

INTEGRAL ABUTMENT
BEAM LOCATION

Figure 3.8.3-7

3.8.4 Open Abutments: Semi-Integral

Semi-integral jointless abutment details are shown in Figures 3.8.4-1 through 3.8.4-4. Applications for these abutments are described in Sections 2.3.6.2.1 and 2.4.2.3. TSL Ex. 13 (available online) contains an example of an existing abutment converted to a semi-integral abutment. The five general limitations for integral abutment structures outlined in Section 2.3.6.2.1 are also applicable for semi-integral abutment structures. Wingwalls shall not be connected to the superstructure when semi-integral jointless abutments are used. The backwall of existing abutments that are to be made semi-integral shall be completely removed, and the required backwall shall then be constructed. Loads transferred from the bridge approach slab to the substructure shall be considered to act through the bearing, not the backwall.

To ensure stability during construction, semi-integral structures with new steel girders shall be additionally braced as specified in item #9 of Section 3.8.3. The reuse of existing cross frames and diaphragms on a structure which will be made semi-integral will be handled on a case-by-case basis with the concurrence of the BBS.

Figures 3.7.4-16 and 3.7.4-17 show the preferred bearing details for new structures with semi-integral abutments. These details are intended to ease future bearing replacement.

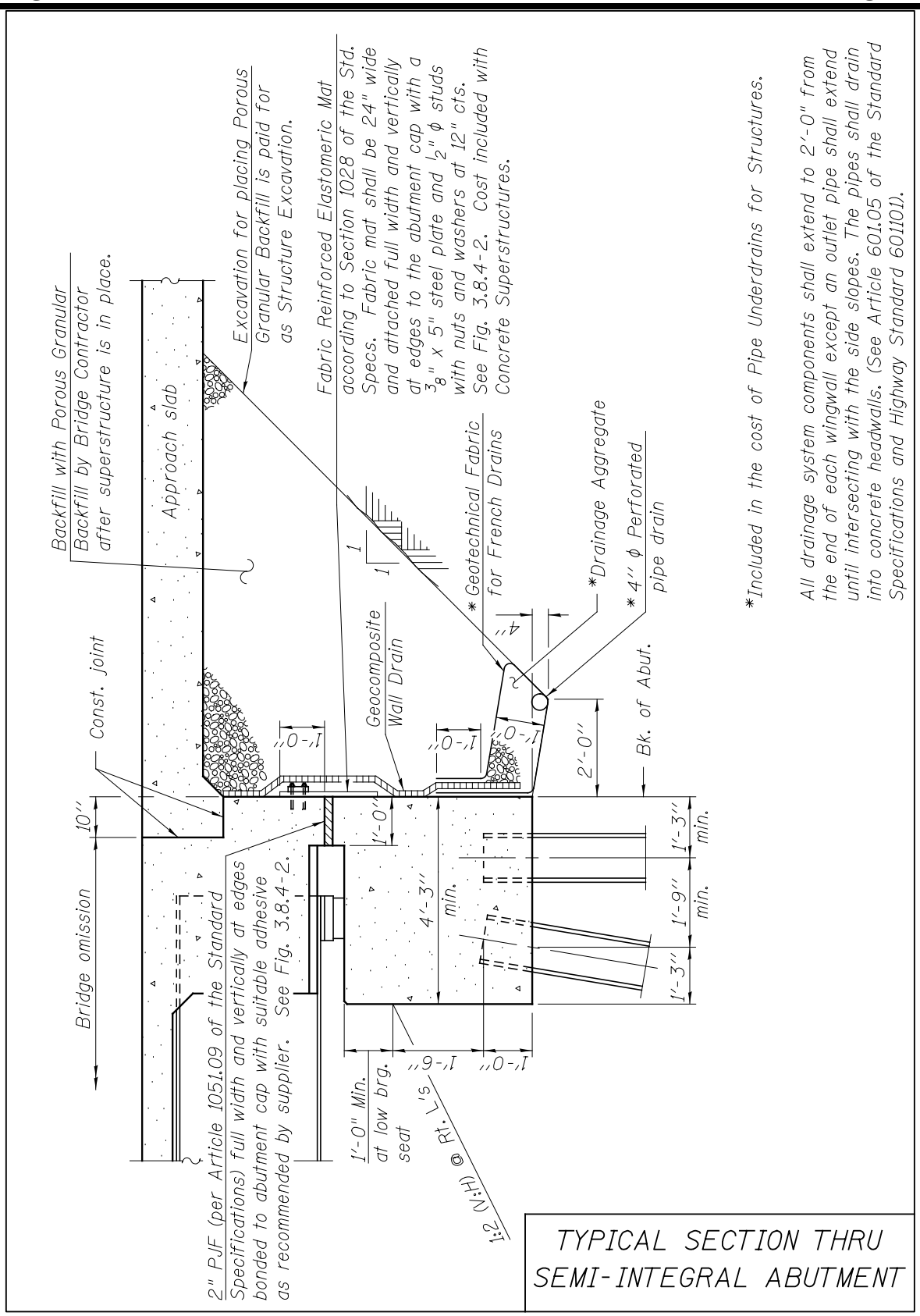
Backfill with Porous Granular
Backfill by Bridge Contractor
after superstructure is in place.
Approach slab
Excavation for placing Porous
Granular Backfill is paid for
as Structure Excavation.
Fabric Reinforced Elastomeric Mat
according to Section 1028 of the Std.
Specs. Fabric mat shall be 24" wide
and attached full width and vertically
at edges to the abutment cap with a
3/8" x 5" steel plate and 1/2" ϕ studs
with nuts and washers at 12" cts.
See Fig. 3.8.4-2. Cost included with
Concrete Superstructures.
1
1
* Geotechnical Fabric
for French Drains
*Drainage Aggregate
* 4" ϕ Perforated
pipe drain
*Included in the cost of Pipe Underdrains for Structures.
All drainage system components shall extend to 2'-0" from
the end of each wingwall except an outlet pipe shall extend
until intersecting with the side slopes. The pipes shall drain
into concrete headwalls. (See Article 601.05 of the Standard
Specifications and Highway Standard 601101).
Const. joint
Geocomposite
Wall Drain
4"
1'-0"
1'-0"
1'-0"
2'-0"
Bk. of Abut.
10"
1'-0"
1'-3"
min.
1'-9"
min.
1'-3"
Bridge omission
4'-3"
min.
2" PJF (per Article 1051.09 of the Standard
Specifications) full width and vertically at edges
bonded to abutment cap with suitable adhesive
as recommended by supplier. See Fig. 3.8.4-2.
1'-0" Min.
at low brg.
seat
1'-9"
1'-0"
1:2 (V:H) @ Rt. L's
TYPICAL SECTION THRU
SEMI-INTEGRAL ABUTMENT

Figure 3.8.4-1

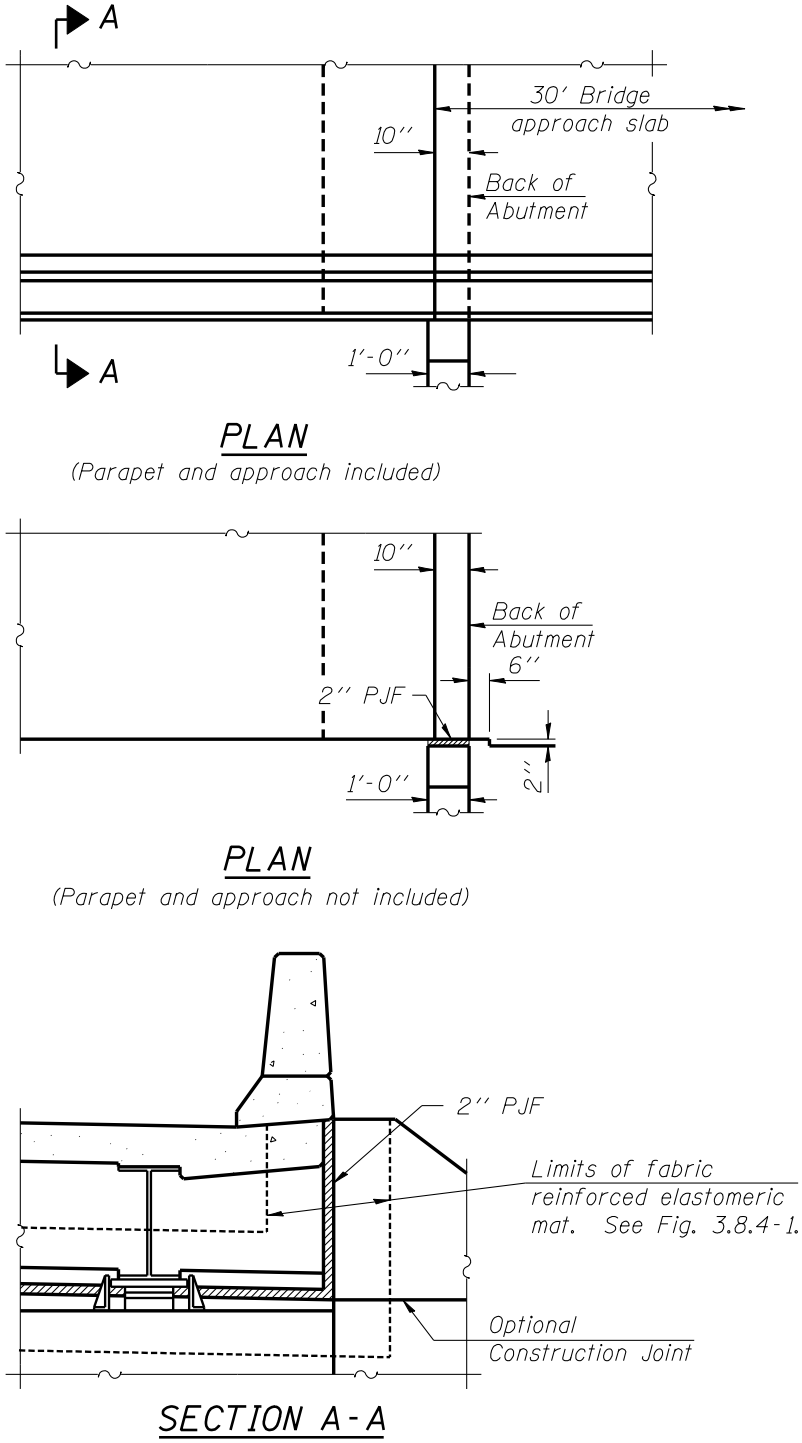

SEMI-INTEGRAL
ABUTMENT DETAILS

Figure 3.8.4-2

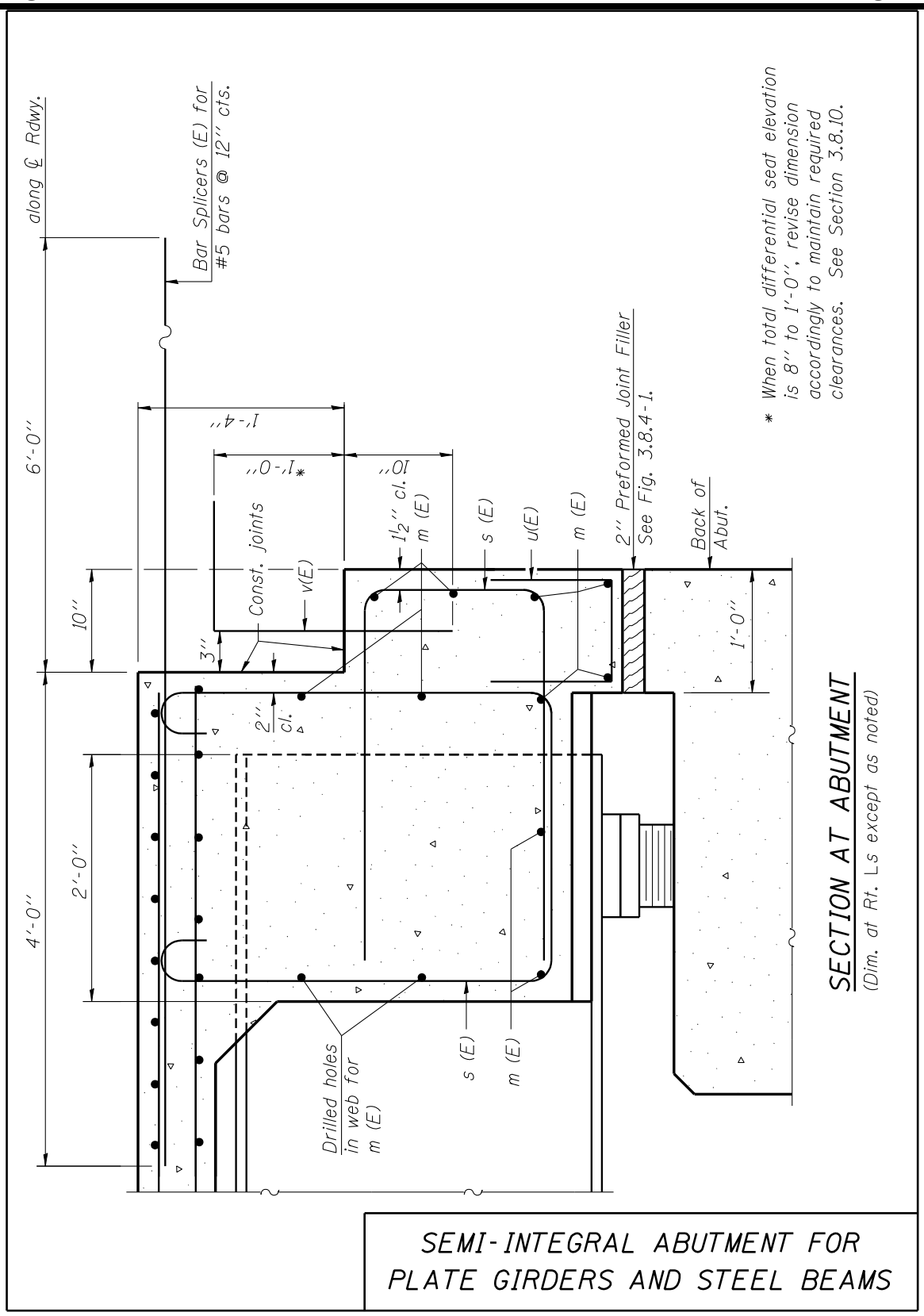
along ℄ Rdwy.
Bar Splicers (E) for
#5 bars @ 12'' cts.
6'-0''
1'-4''
*1'-0''
10''
1½'' cl.
m (E)
s (E)
u(E)
m (E)
2'' Preformed Joint Filler
See Fig. 3.8.4-1.
Back of
Abut.
* When total differential seat elevation
is 8'' to 1'-0'', revise dimension
accordingly to maintain required
clearances. See Section 3.8.10.
Const. joints
v(E)
10''
3''
2''
cl.
1'-0''
4'-0''
2'-0''
Drilled holes
in web for
m (E)
s (E)
m (E)
SECTION AT ABUTMENT
(Dim. at Rt. Ls except as noted)
SEMI-INTEGRAL ABUTMENT FOR
PLATE GIRDERS AND STEEL BEAMS

Figure 3.8.4-3

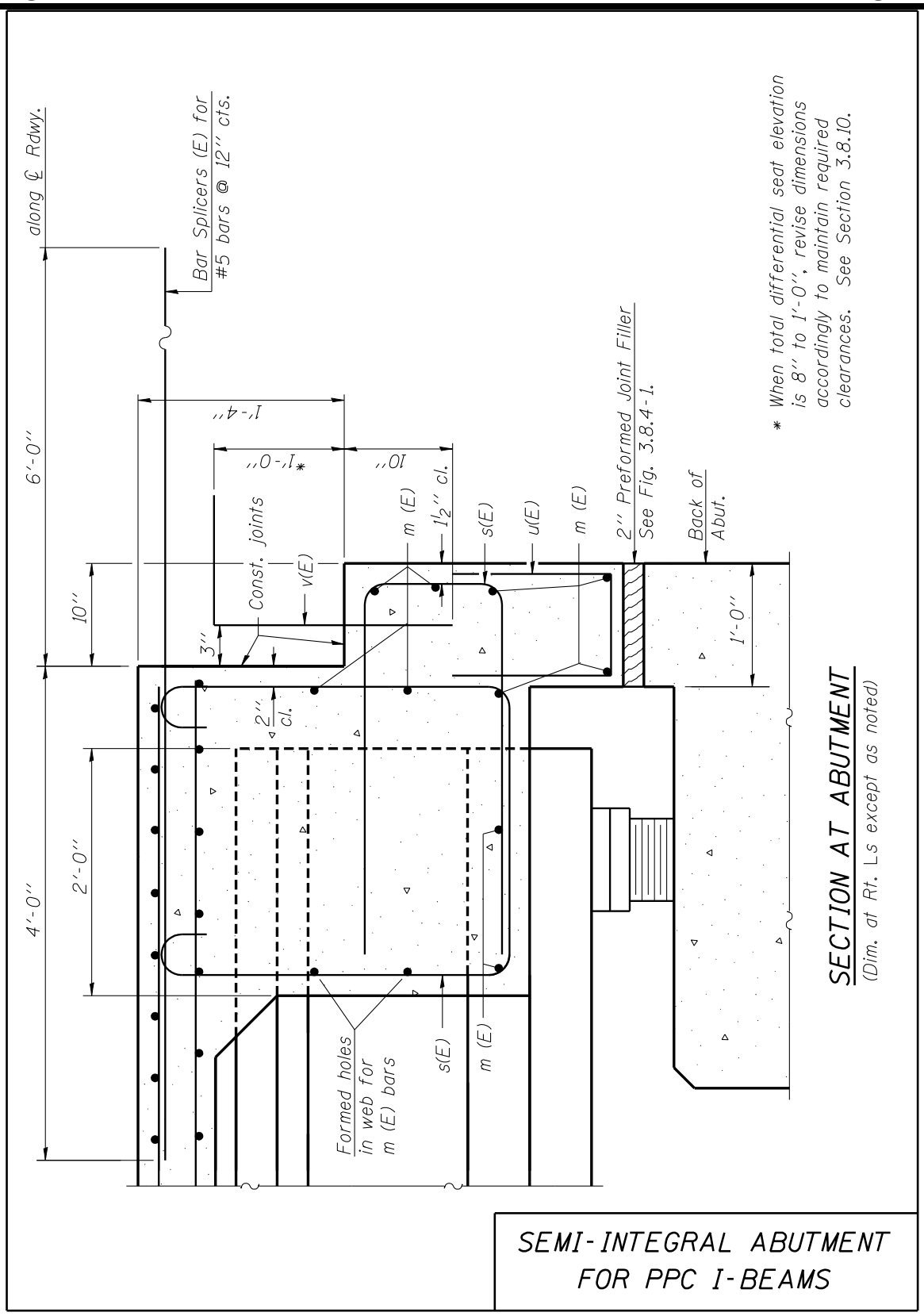
along ℄ Rdwy.
Bar Splicers (E) for
#5 bars @ 12'' cts.
6'-0''
1'-4''
*1'-0''
10''
Const. joints
v(E)
m (E)
1½'' cl.
s(E)
u(E)
m (E)
2'' Preformed Joint Filler
See Fig. 3.8.4-1.
Back of
Abut.
* When total differential seat elevation
is 8'' to 1'-0'', revise dimensions
accordingly to maintain required
clearances. See Section 3.8.10.
10''
3''
2'' cl.
1'-0''
4'-0''
2'-0''
Formed holes
in web for
m (E) bars
s(E)
m (E)
SECTION AT ABUTMENT
(Dim. at Rt. Ls except as noted)
SEMI-INTEGRAL ABUTMENT
FOR PPC I-BEAMS

Figure 3.8.4-4

3.8.5 Open Abutments: Stub

The general details and design criteria for standard stub abutments supported by piles are shown in Figures 3.8.5-1 and 3.8.5-2.

An alternate stub abutment supported by piles is shown in Figure 3.8.5-3. Generally, short right angle wings are used with this detail rather than the standard end posts.

A stub abutment supported by piles for a fixed slab bridge is shown in Figure 3.8.5-4. The slab shall be connected to the abutment cap with a minimum of #5 bars at 12 in. cts. However, no reinforcement shall connect the slab to the approach. A single row of piles is preferred for fixed conditions.

When calculating pile reactions, the live load may be placed on either the approach span or the bridge span to maximize the live load reaction. A live load surcharge equal to two feet of soil shall be applied when no approach slab is provided.

Drainage details for stub abutments are presented in Figure 3.8.5-5.

Figure 3.8.5-6 provides expansion bearing locations for PPC beams on stub abutments.

Figure 3.8.5-7 shows end diaphragm details for PPC beams with fixed bearings at sealed fixed joints.

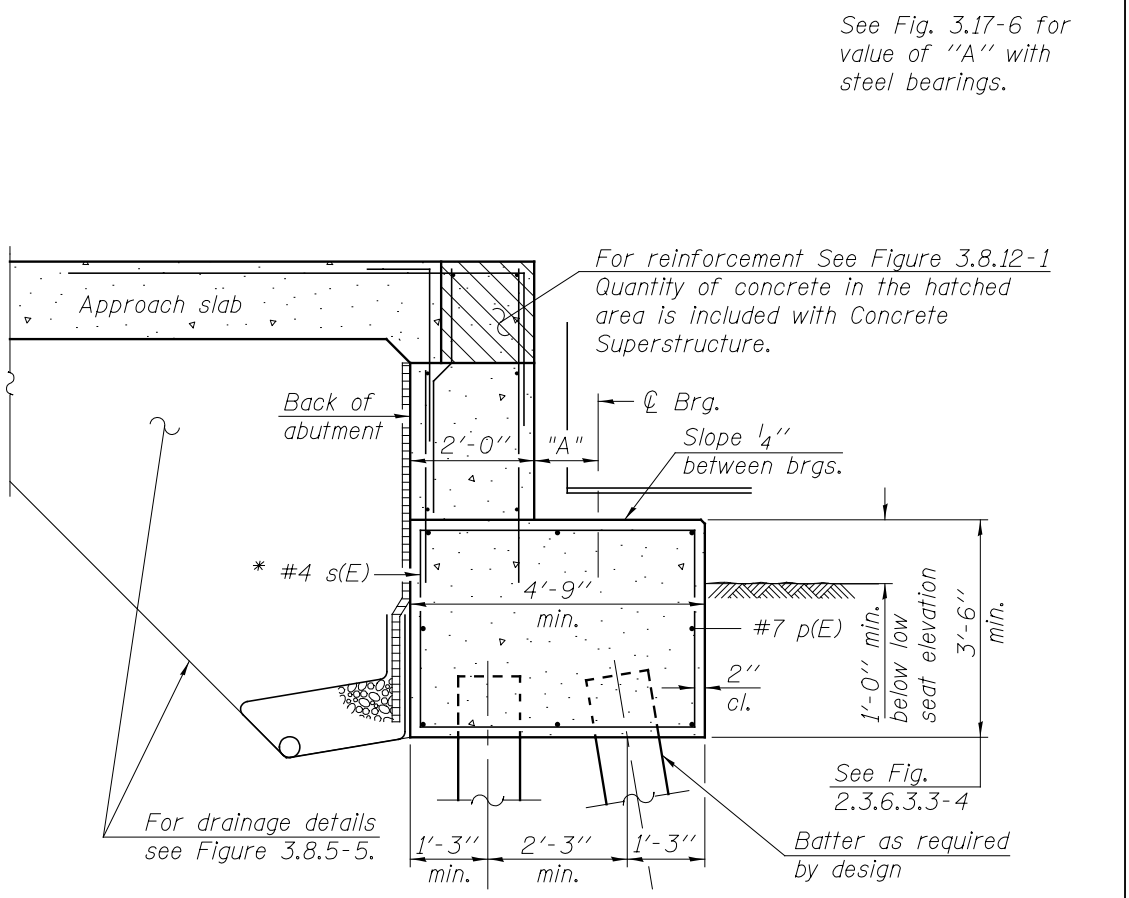

PILE SUPPORTED STUB ABUTMENT

Figure 3.8.5-1

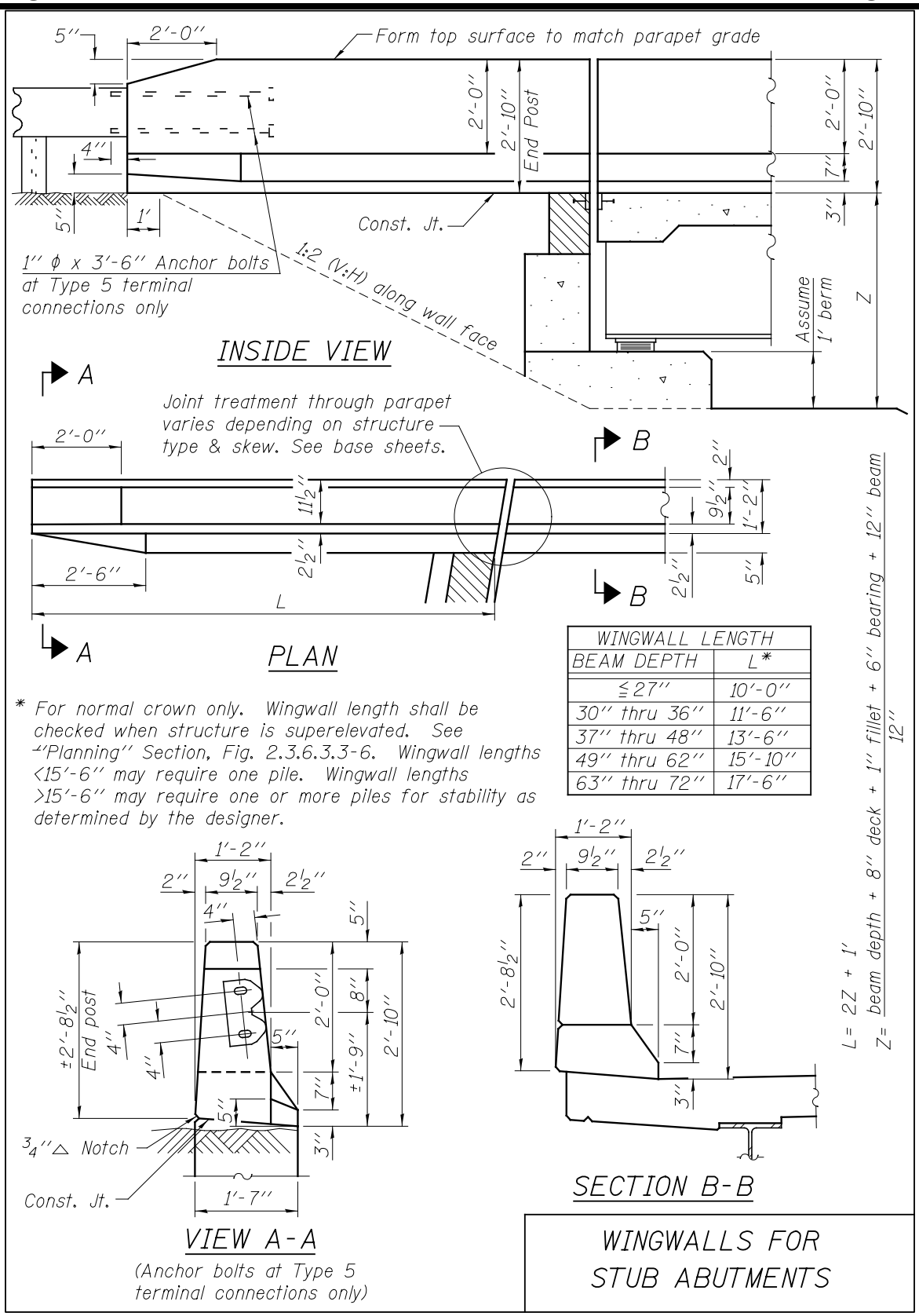

WINGWALL LENGTH	
BEAM DEPTH	L*
≦27''	10'-0''
30'' thru 36''	11'-6''
37'' thru 48''	13'-6''
49'' thru 62''	15'-10''
63'' thru 72''	17'-6''

* For normal crown only. Wingwall length shall be checked when structure is superelevated. See "Planning" Section, Fig. 2.3.6.3.3-6. Wingwall lengths <15'-6'' may require one pile. Wingwall lengths >15'-6'' may require one or more piles for stability as determined by the designer.

Figure 3.8.5-2

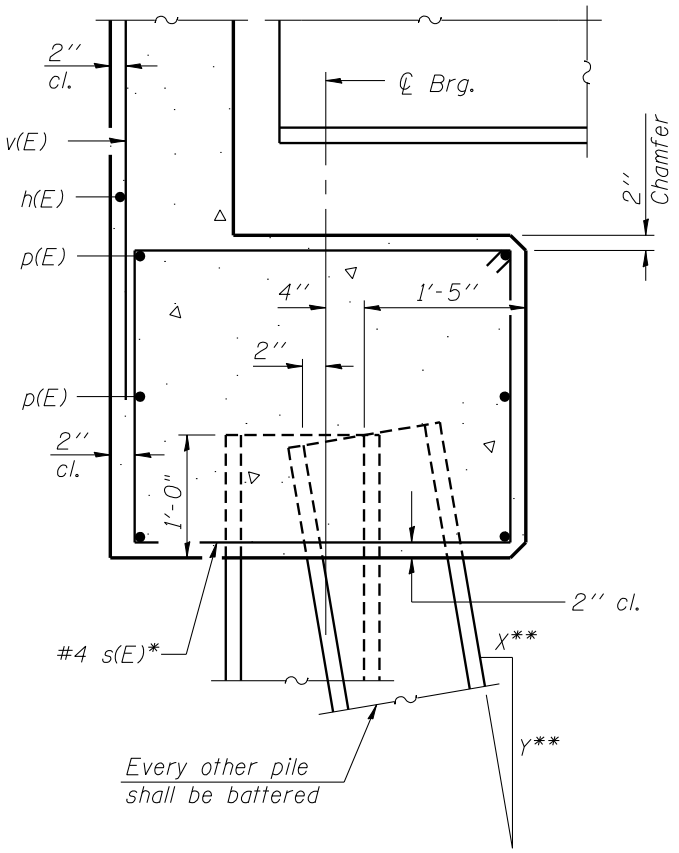

* Space s(E) bars to satisfy minimum shear requirements.
** Batter as required by design

ALTERNATE PILE
SUPPORTED STUB ABUTMENT

Figure 3.8.5-3

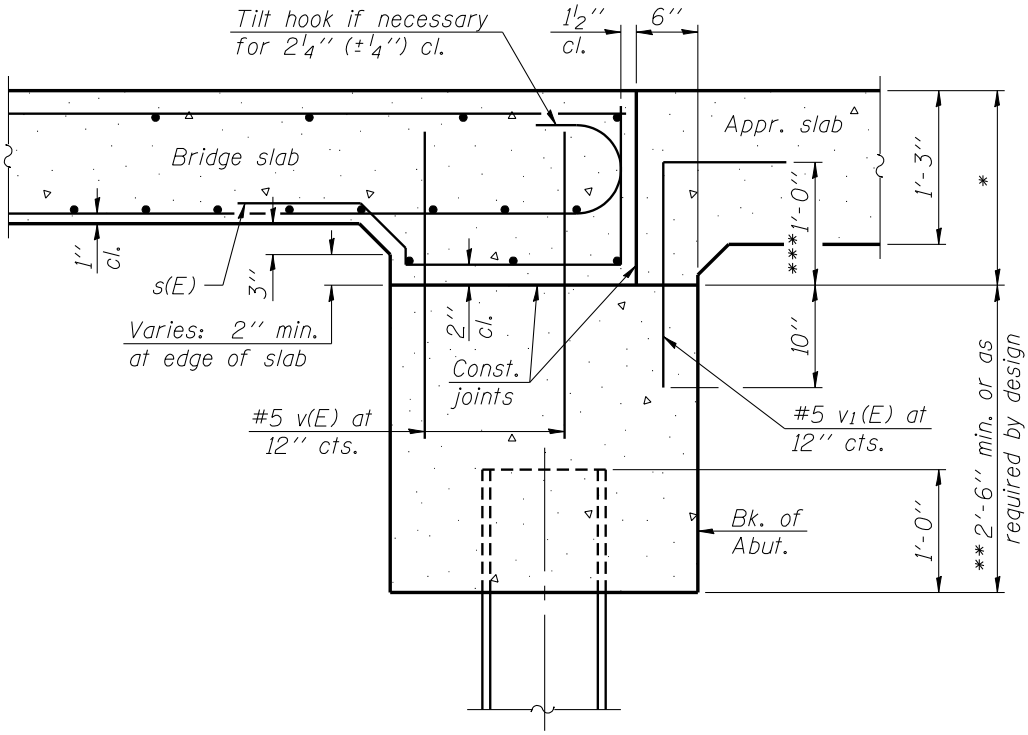

SECTION
AT ABUTMENT

* See Section 3.8.10. Pour bridge slab before pouring approach slab.

** See Figure 2.3.6.3.3-2.

*** When total differential crown elevation is 8'' to 1'-0'', revise dimensions accordingly to maintain required clearances. See Section 3.8.10.

PILE SUPPORTED
STUB ABUTMENT FOR
FIXED SLAB BRIDGES

Figure 3.8.5-4

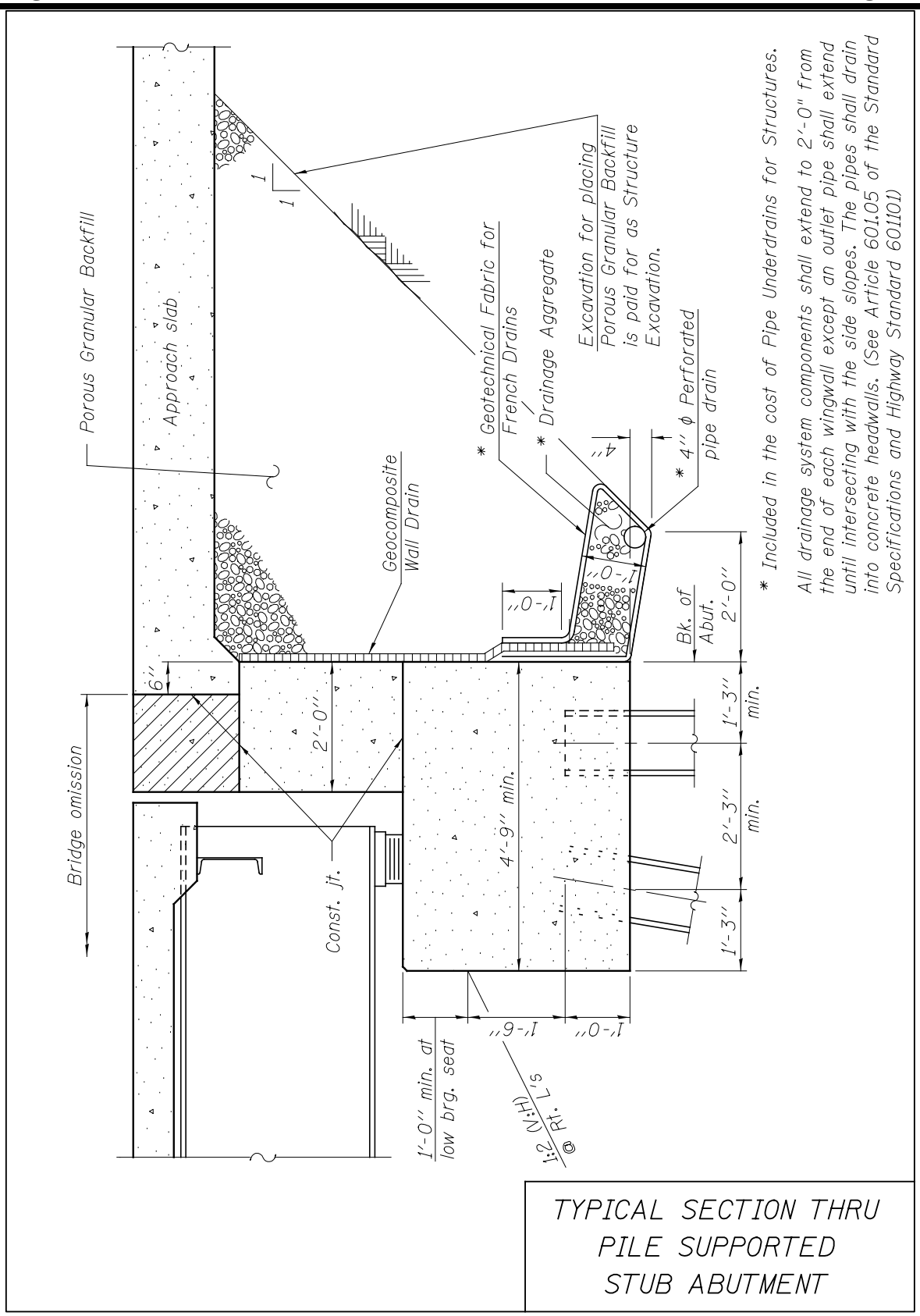
Porous Granular Backfill
Approach slab
1
1
* Geotechnical Fabric for French Drains
* Drainage Aggregate
Excavation for placing Porous Granular Backfill is paid for as Structure Excavation.
* 4'' ϕ Perforated pipe drain
4''
Geocomposite Wall Drain
1'-0''
1'-0''
Bk. of Abut.
2'-0''
1'-3'' min.
2'-3'' min.
1'-3''
6''
2'-0''
4'-9'' min.
Bridge omission
Const. jt.
1'-0'' min. at low brg. seat
1:2 (V:H) @ Rt. L's
1'-6''
1'-0''
* Included in the cost of Pipe Underdrains for Structures.
All drainage system components shall extend to 2'-0" from the end of each wingwall except an outlet pipe shall extend until intersecting with the side slopes. The pipes shall drain into concrete headwalls. (See Article 601.05 of the Standard Specifications and Highway Standard 601101)
TYPICAL SECTION THRU PILE SUPPORTED STUB ABUTMENT

Figure 3.8.5-5

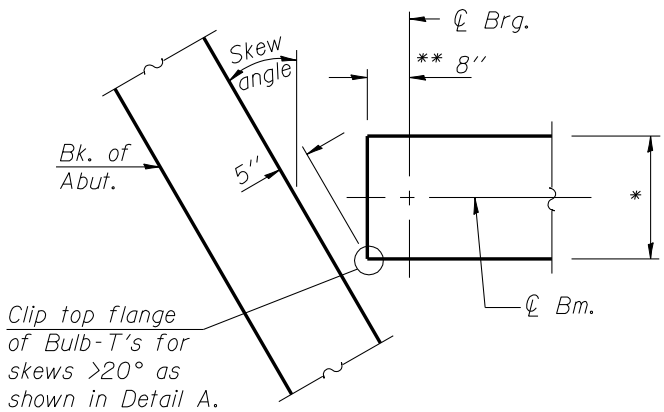

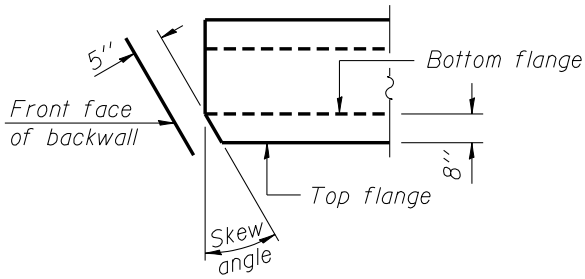

DETAIL A

* 18'' (36'' I-Beam)
22'' (42'',48'' & 54'' I-Beam)
42'' (63'' & 72'' Bulb-T (top flange))

** The 8'' dimension is intended for use with bearings given in Section 3.7. When bearings outside the limits of the Bridge Manual are used this dimension may need to be increased.

Note:
For seismic design of seat lengths see Section 3.15.

EXPANSION BEARING LOCATION AT STUB ABUTMENTS FOR PPC BEAMS

Figure 3.8.5-6

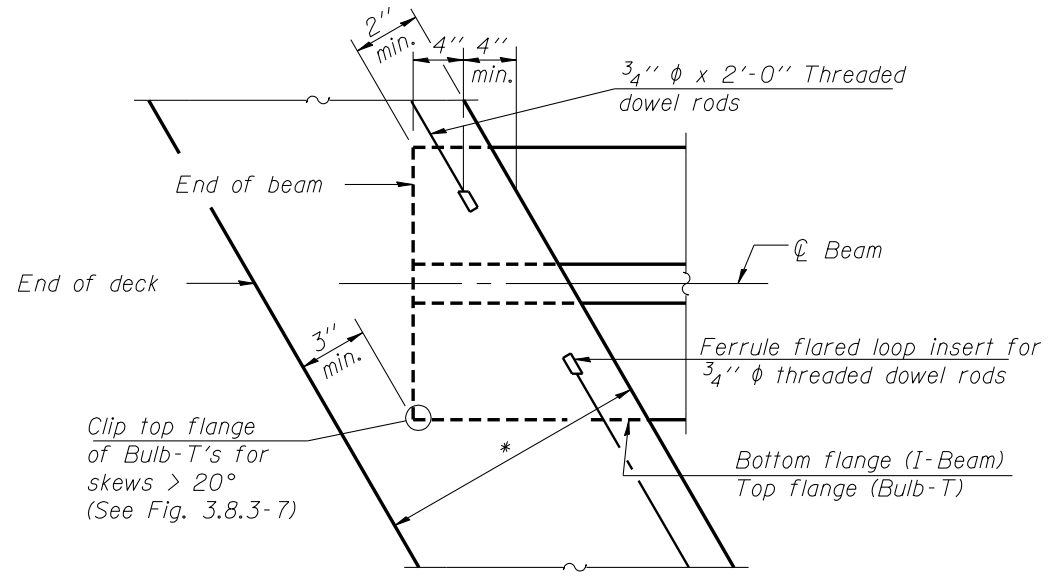

SKEWED DIAPHRAGM

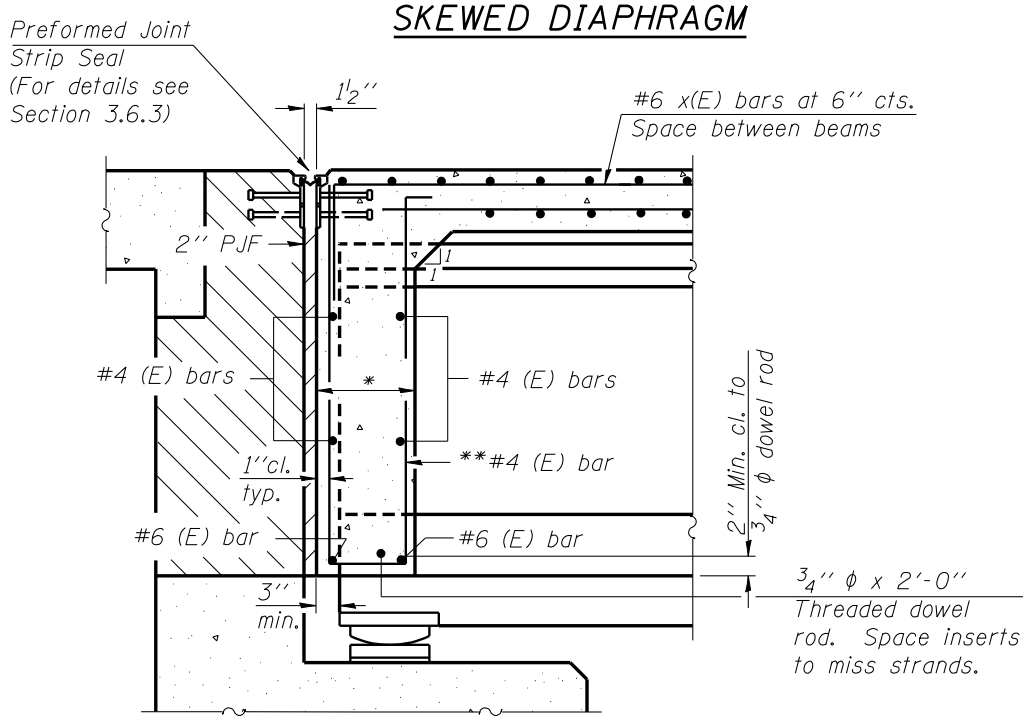

SECTION THRU ABUTMENT

* 1'-6'' for I-Beams
2'-0'' for Bulb-T's

** Place parallel to beams and space at right angles to beams.

END DIAPHRAGM AT FIXED BEARING FOR PPC BEAMS AT SEALED FIXED JOINT

Figure 3.8.5-7

3.8.6 Closed Abutments – General

Joints in closed concrete abutments shall be similar to those illustrated in Figure 3.11.2-1. Reinforcement shall be continuous through construction joints, but no reinforcement shall pass through expansion joints. Only construction joints are permitted in the footings.

Wingwalls of a closed abutment shall not be poured integrally with the abutment wall, but shall be separated from the abutment wall with a ½ in. joint filled with preformed joint filler. The front face of the wingwall shall be set back 2 in. from the face of the abutment wall at the top. See Figure 3.8.6-1 for wingwall dimensions and heights. The footing under the wingwall shall be poured continuously with and have the same thickness as the abutment footing. The wingwall footing thickness is usually constant. However, for long wings, the footing width may be reduced, reflecting the reduced overturning moment.

The longitudinal reinforcement (w bars) in a pile supported footing shall be #5 bars at 12 in. cts. minimum placed between piles. The transverse reinforcement (t bars) shall be designed. See Section 3.10.1 for pile spacing requirements of pile supported footings. For the design of a pile supported footing in flexure and in shear, the pile load shall be distributed over a width equal to $0.8X + 3.75$ ft. but not wider than the longitudinal pile spacing, where X is the distance from the edge of the vertical wall to the center line of the pile under consideration.

Wingwalls shall be designed according to the criteria given in the Culvert Manual with batter on the front face up to a maximum of ½ in. per ft. of height. If a greater wall thickness is required, place the additional batter on the backface. The batter shall be constant for the full length of the wing. The minimum thickness of any wingwall with a closed abutment shall be 12 in.

Weep holes are to be provided at 8 ft. centers in all closed abutment walls and wingwalls unless the sidewalks or roadways near the face would be affected by drainage or ice. Figure 3.8.6-2 illustrates a typical section through a closed abutment with a weep hole. If weep holes are not provided, an alternate system of pipe underdrains should be employed. Figure 3.8.6-3 includes a pipe underdrain detail.

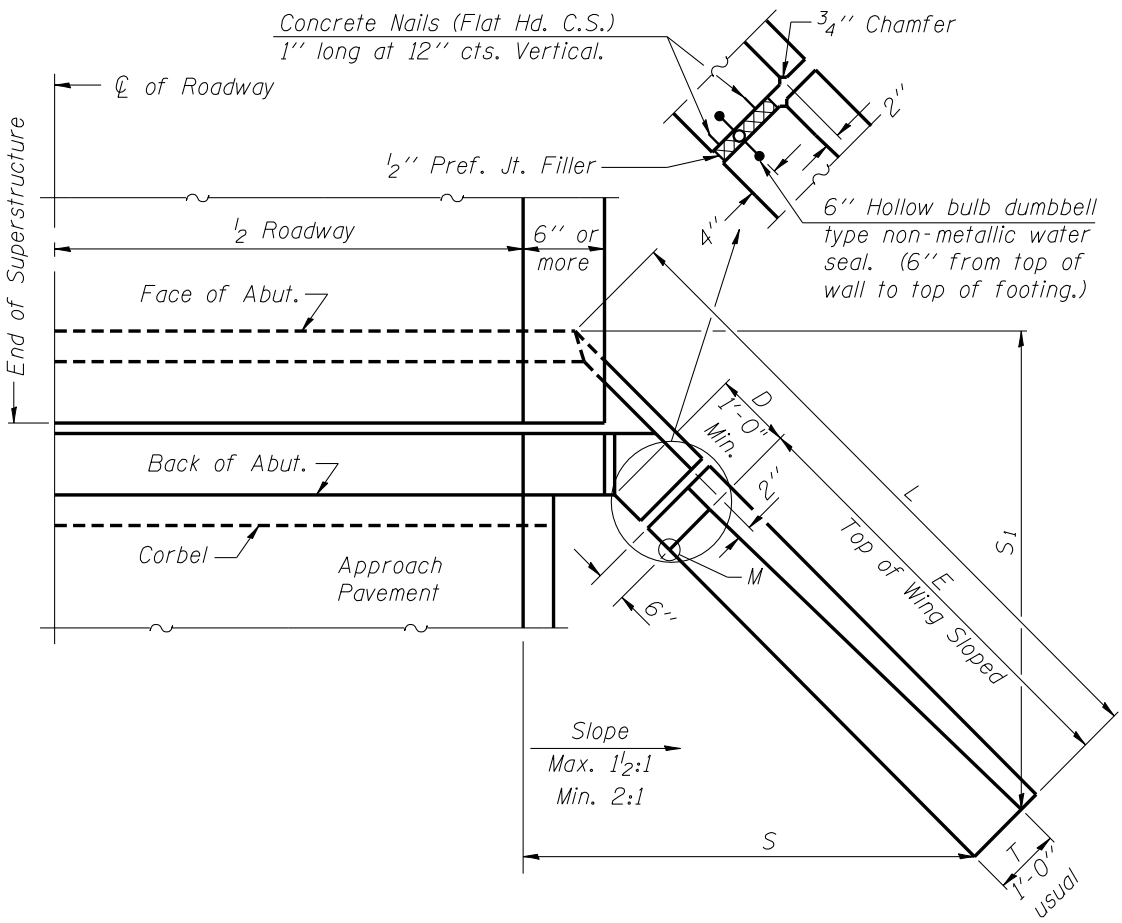

D (From angle in back face of wall) = 12''.

Wing Length-L:

(1) If roadway slopes are $1\frac{1}{2}$: 1, figure L to nearest 6'' to allow $1\frac{1}{2}$: 1 slope along $S + T + S_1$ from actual shoulder elevation to stream bed elevation.

(2) If roadway slopes are 2 : 1 or flatter, design wings for 2 : 1 slope along $S + T + S_1$ instead of $1\frac{1}{2}$: 1. Otherwise as above.

Wing Heights & Drop:

(1) Top of wing to be at top of curb or sidewalk along distance D to M.

(2) Figure drop to nearest 3'' so that inside face at end is same distance above earth slope as M is exposed above ground.

DIMENSIONS
CLOSED ABUTMENTS

Figure 3.8.6-1

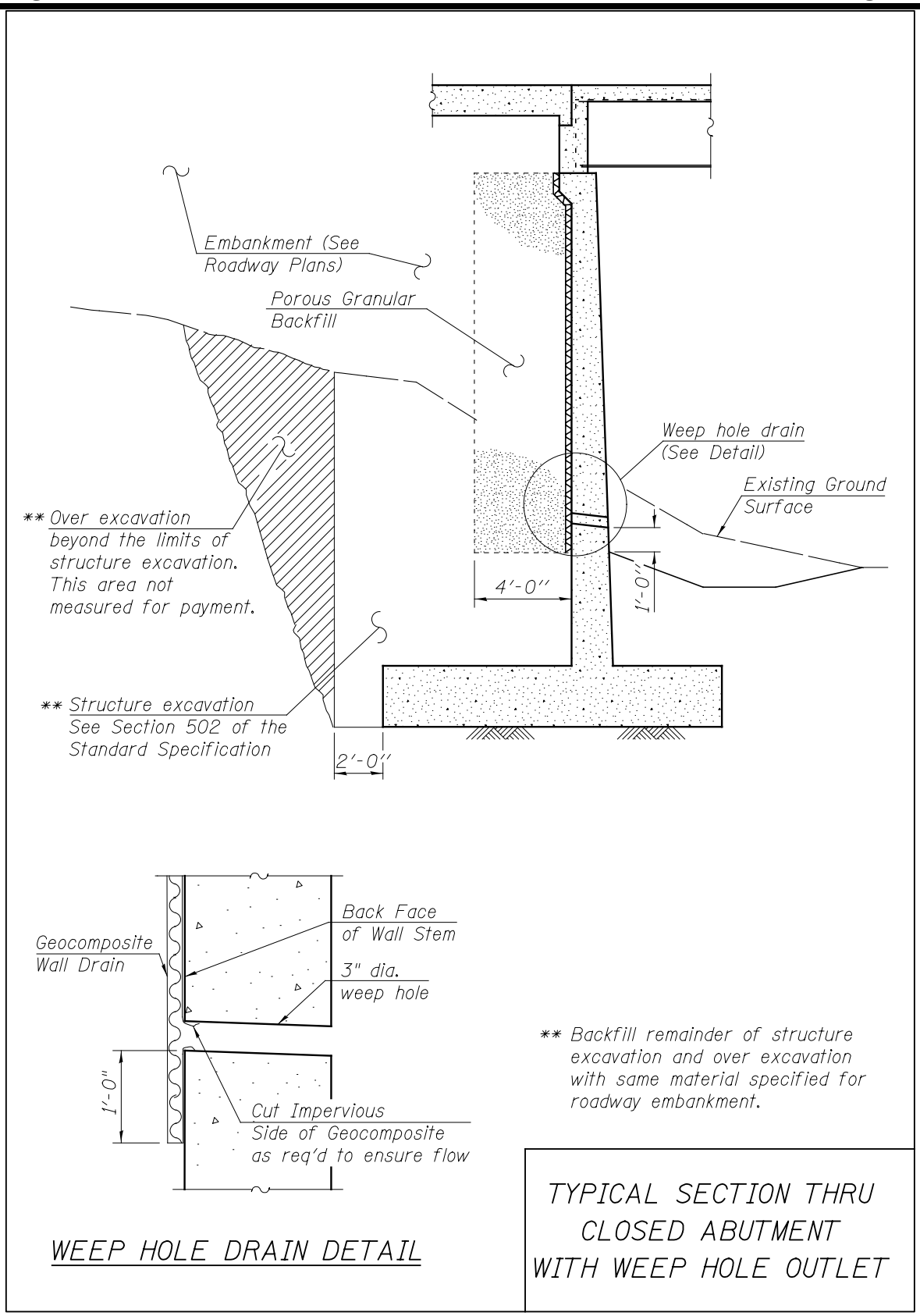
Embankment (See Roadway Plans)
Porous Granular Backfill
Weep hole drain (See Detail)
Existing Ground Surface
** Over excavation beyond the limits of structure excavation. This area not measured for payment.
4'-0"
1'-0"
** Structure excavation See Section 502 of the Standard Specification
2'-0"
Back Face of Wall Stem
Geocomposite Wall Drain
3" dia. weep hole
1'-0"
Cut Impervious Side of Geocomposite as req'd to ensure flow
** Backfill remainder of structure excavation and over excavation with same material specified for roadway embankment.
WEEP HOLE DRAIN DETAIL
TYPICAL SECTION THRU CLOSED ABUTMENT WITH WEEP HOLE OUTLET

Figure 3.8.6-2

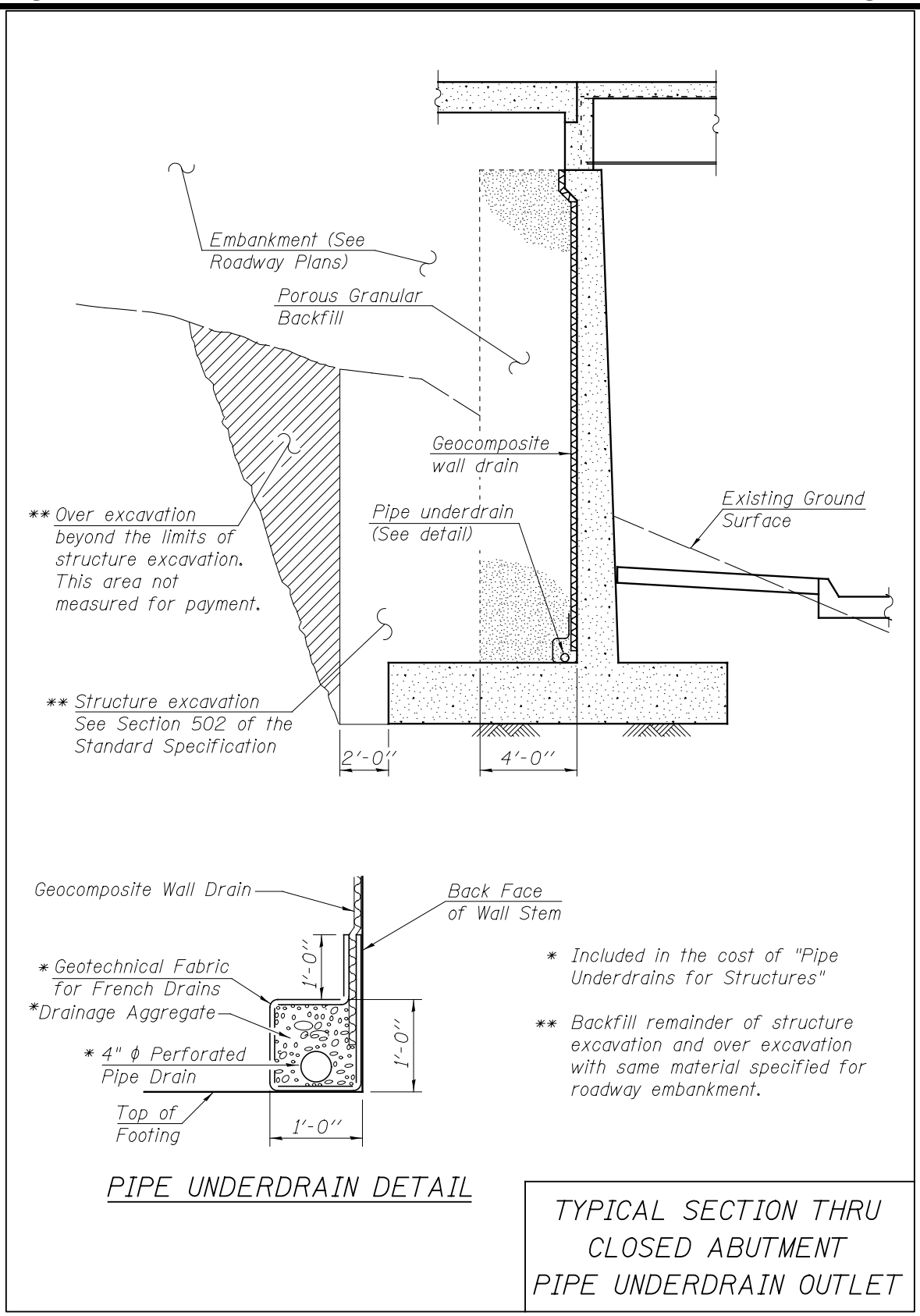
Embankment (See Roadway Plans)
Porous Granular Backfill
Geocomposite wall drain
Existing Ground Surface
** Over excavation beyond the limits of structure excavation. This area not measured for payment.
Pipe underdrain (See detail)
** Structure excavation See Section 502 of the Standard Specification
2'-0''
4'-0''
Geocomposite Wall Drain
Back Face of Wall Stem
* Geotechnical Fabric for French Drains
*Drainage Aggregate
* 4" ϕ Perforated Pipe Drain
Top of Footing
1'-0''
1'-0''
1'-0''
* Included in the cost of "Pipe Underdrains for Structures"
** Backfill remainder of structure excavation and over excavation with same material specified for roadway embankment.
PIPE UNDERDRAIN DETAIL
TYPICAL SECTION THRU CLOSED ABUTMENT PIPE UNDERDRAIN OUTLET

Figure 3.8.6-3

3.8.7 Closed Abutments – Restrained Top and Bottom

Simple spans supported on closed abutments may be fixed at both supports when the back-to-back of abutment dimension measured along the centerline of roadway does not exceed 45 ft. When both supports are fixed, the abutments shall be designed as restrained top and bottom. The design earth pressure should be calculated assuming at-rest conditions. If the approach roadway is a non-rigid type, a live load surcharge of 2 ft. of soil shall be added to the earth pressure.

Figure 3.8.7-1 presents general design details for closed abutments restrained top and bottom.

Figures 3.8.7-2, 3.8.7-3 and 3.8.7-4 detail closed abutments with fixed supports for slab bridges, R.C. girder bridges and steel stringer bridges, respectively. These details are generally associated with closed abutments restrained top and bottom.

The longitudinal reinforcement (w bars) in a pile supported footing shall be #5 bars at 12 in. cts. minimum placed between piles. The transverse reinforcement (t bars) shall be designed. See Section 3.10.1 for pile spacing requirements of pile supported footings. For the design of a pile supported footing in flexure and in shear, the pile load shall be distributed over a width equal to $0.8X + 3.75$ ft. but not wider than the longitudinal pile spacing, where X is the distance from the edge of the vertical wall to the center line of the pile under consideration.

Drainage details similar to those in Figures 3.8.6-2 and 3.8.6-3 shall apply.

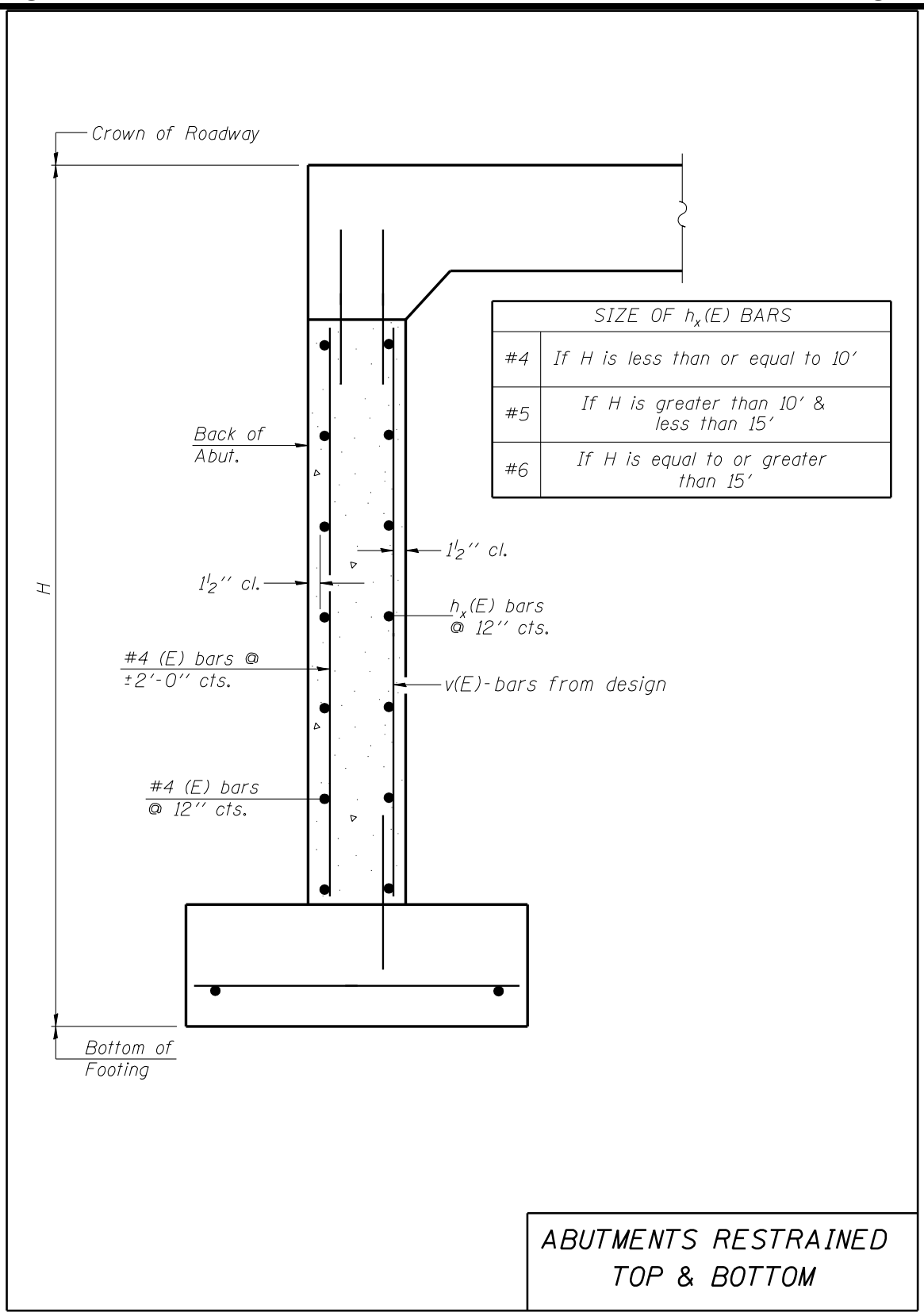
Crown of Roadway
H
Back of
Abut.
1½'' cl.
1½'' cl.
hx(E) bars
@ 12'' cts.
#4 (E) bars @
±2'-0'' cts.
v(E)-bars from design
#4 (E) bars
@ 12'' cts.
Bottom of
Footing
SIZE OF hx(E) BARS
#4 If H is less than or equal to 10'
#5 If H is greater than 10' & less than 15'
#6 If H is equal to or greater than 15'
ABUTMENTS RESTRAINED
TOP & BOTTOM

Figure 3.8.7-1

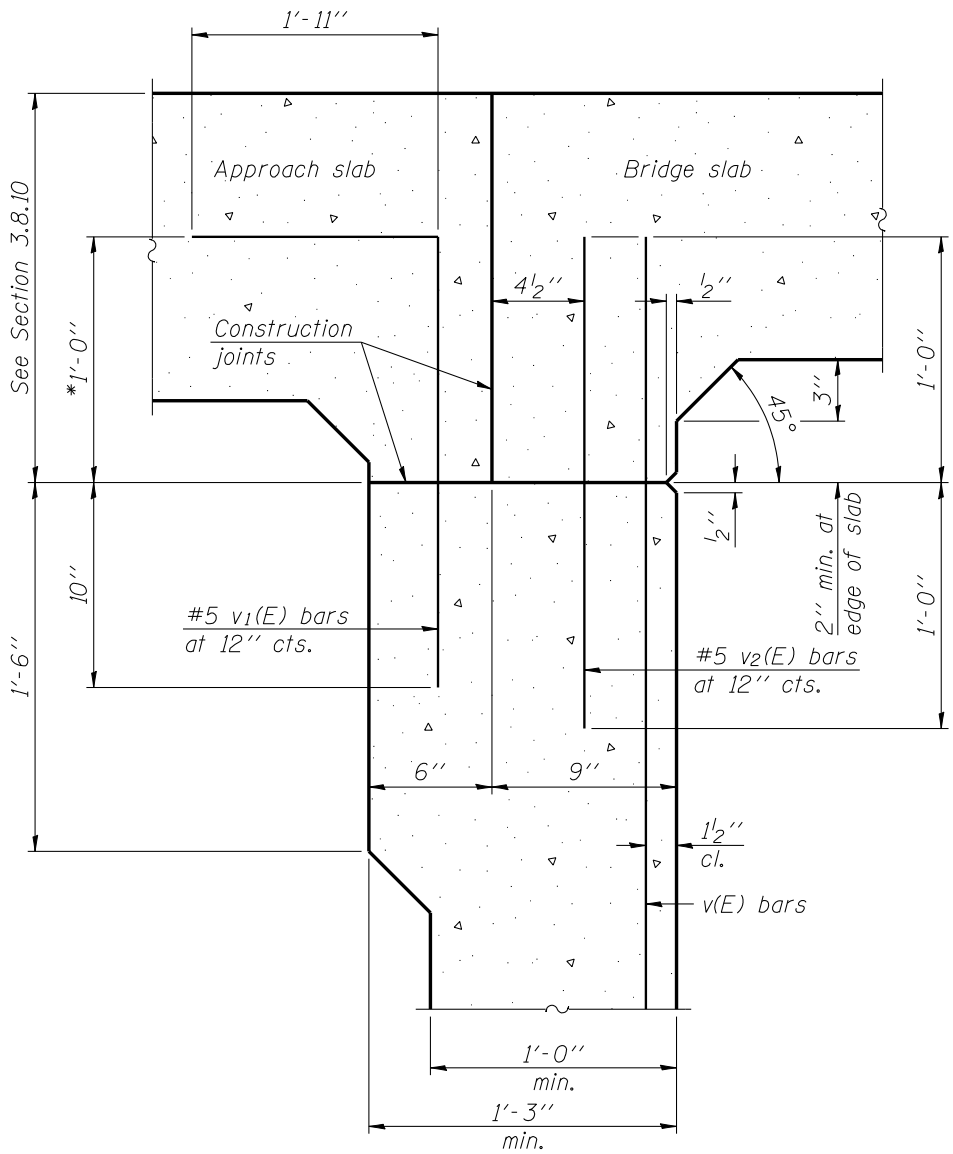

* When total differential crown elevation is 8" to 1'-0", revise dimensions accordingly to maintain required clearances. See Section 3.8.10.

CLOSED ABUTMENTS
SLAB BRIDGES

Figure 3.8.7-2

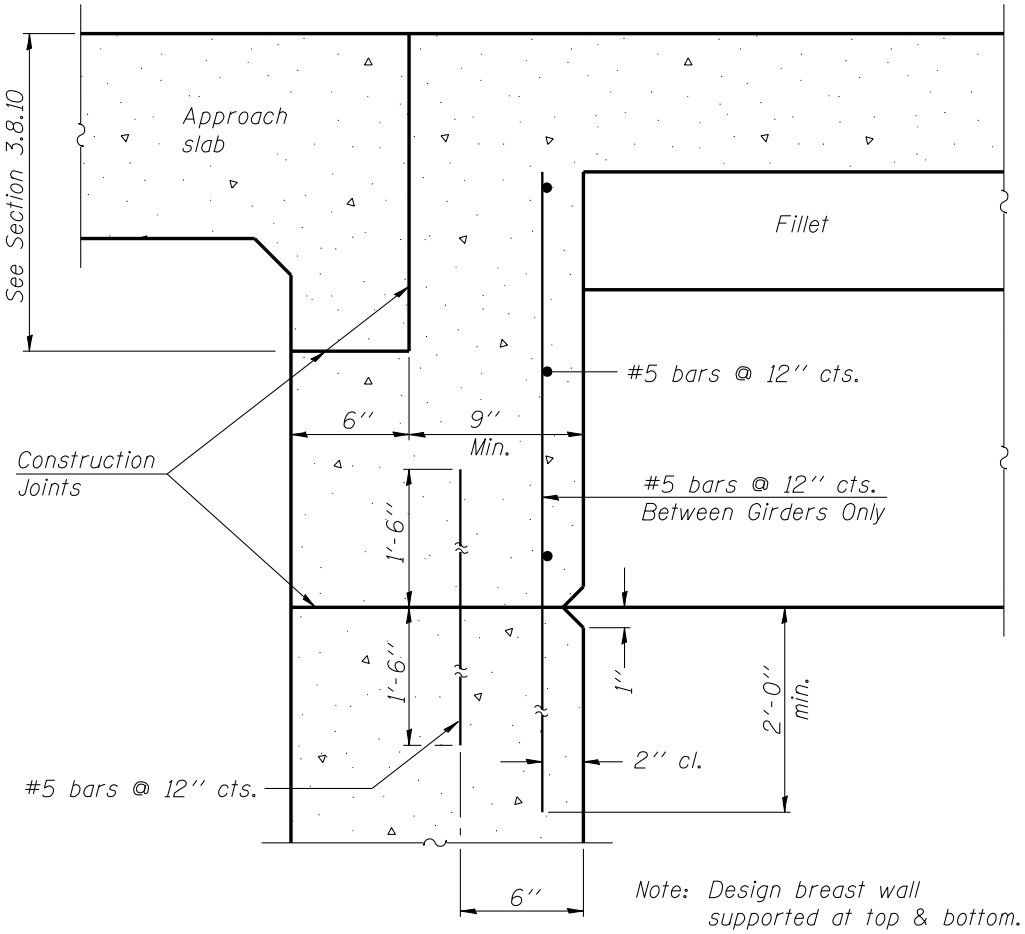

FOR SINGLE SPAN UNDER 45 FT.

CLOSED ABUTMENTS
R.C. GIRDER BRIDGES

Figure 3.8.7-3

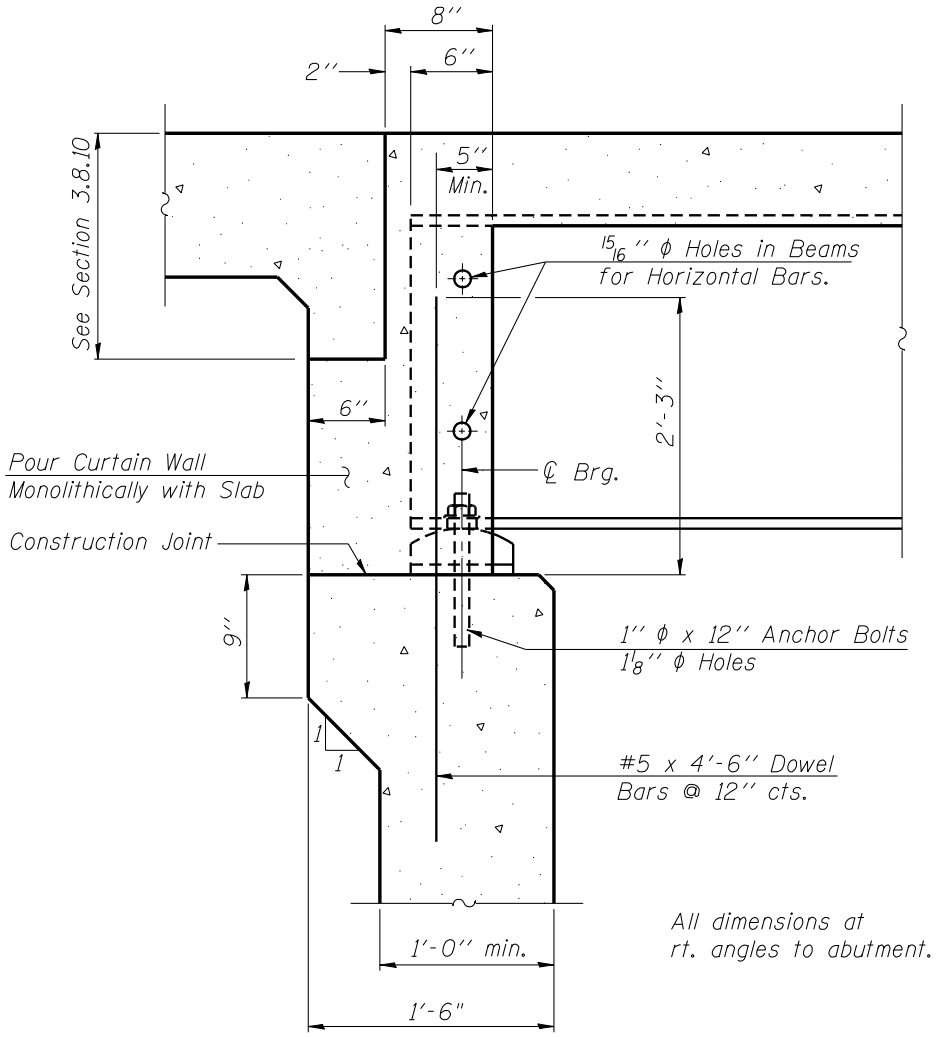

FOR SINGLE SPAN UNDER 45 FT.

CLOSED ABUTMENTS
STEEL STRINGER BRIDGES

Figure 3.8.7-4

3.8.8 Closed Abutments – Cantilever Type

When the back-to-back dimension between closed abutments exceeds 45 ft., the supports for a simple span shall be fixed at one end and expansion at the other end. For this situation, both closed abutments shall be designed as free cantilevers. The wall stem should be designed to minimize wall deflections and maintain the required joint opening. This may entail use of at-rest earth pressures instead of active earth pressures. If the approach roadway is a non-rigid type, there shall be added to the earth pressure a live load surcharge of 2 ft. of soil.

The vertical reinforcement in the back face shall be designed neglecting vertical loads. Vertical reinforcement in the front face shall be #4 bars at ± 4 ft. – 0 in. cts. Horizontal temperature reinforcement in the front face shall be based on the maximum wall thickness. For walls up to 15 in. thick, use #4 bars at 12 in. cts., and for walls thicker than 15 in., use #5 bars at 12 in. cts. Horizontal reinforcement in the back face shall be #4 bars at ± 3 ft. – 0 in. centers. Batter requirements shall be the same as that specified for wingwalls.

The longitudinal reinforcement (w bars) in a pile supported footing shall be #5 bars at 12 in. cts. minimum placed between piles. The transverse reinforcement (t bars) shall be designed. See Section 3.10.1 for pile spacing requirements of pile supported footings. For the design of a pile supported footing in flexure and in shear, the pile load shall be distributed over a width equal to $0.8X + 3.75$ ft. but not wider than the longitudinal pile spacing, where X is the distance from the edge of the vertical wall to the center line of the pile under consideration.

Drainage details similar to those in Figures 3.8.6-2 and 3.8.6-3 shall apply.

3.8.9 Vaulted Abutments

The general configuration of the standard vaulted abutment utilizing precast, prestressed beams to support the abutment span is illustrated in Figure 3.8.9-1. This abutment is generally used when the abutment design span at right angles is greater than 21 ft. Access to the inside of the vault shall be provided for in this type of abutment.

The space provided between the curtain wall and the adjacent precast beam should be large enough to allow for inspection. The distance from the center of the curtain wall to the center of the adjacent precast beam may be as large as the center-to-center spacings of the precast

beams. The curtain wall shall be designed to carry its share of vertical load and may be designed for the loadings specified for outside or exterior roadway beams.

Figures 3.8.9-2 and 3.8.9-3 provide the information necessary to determine the critical abutment dimensions.

Figure 3.8.9-4 provides details for end diaphragm reinforcement for PPC beams on vaulted abutments.

Figure 3.8.9-5 shows the general configuration and standard dimensions of the filled vaulted abutment using a reinforced concrete slab as the abutment slab. This abutment is generally used when the right angle design span is 21 ft. or less.

The vertical steel extending from the footing into the front wall of the sand filled vault shall be #7 bars at 12 in. cts. minimum. The vertical steel in the wall shall be #6 at 12 in. cts. minimum.

Figures 3.17-6 and 3.17-7 show the main span bearing location for both types of abutments.

Vaulted abutment footings may be supported by piles or drilled shafts. See Sections 3.10.1 and 3.10.2, respectively, for more information. When the existing ground has adequate bearing capacity, the abutment may also be supported by a spread footing instead of using piles or drilled shafts. See Section 3.10.3 for guidance.

The minimum transverse distance between the outside rows of piles in the footings of the sand filled vault shall be 6 ft. – 0 in. The footing shall be reinforced transversely top and bottom. The minimum reinforcement in the top of the footing shall be #6 bars at 12 in. cts. The bottom steel (t bars) shall be designed. The longitudinal reinforcement (w bars) in a pile supported footing shall be #5 bars at 12 in. cts. minimum placed between piles. See Section 3.10.1 for pile spacing requirements of pile supported footings. For the design of a pile supported footing in flexure and in shear, the pile load shall be distributed over a width equal to $0.8X + 3.75$ ft. but not wider than the longitudinal pile spacing, where X is the distance from the edge of the vertical wall to the center line of the pile under consideration.

Figure 3.8.9-6 presents drainage details for vaulted abutments.

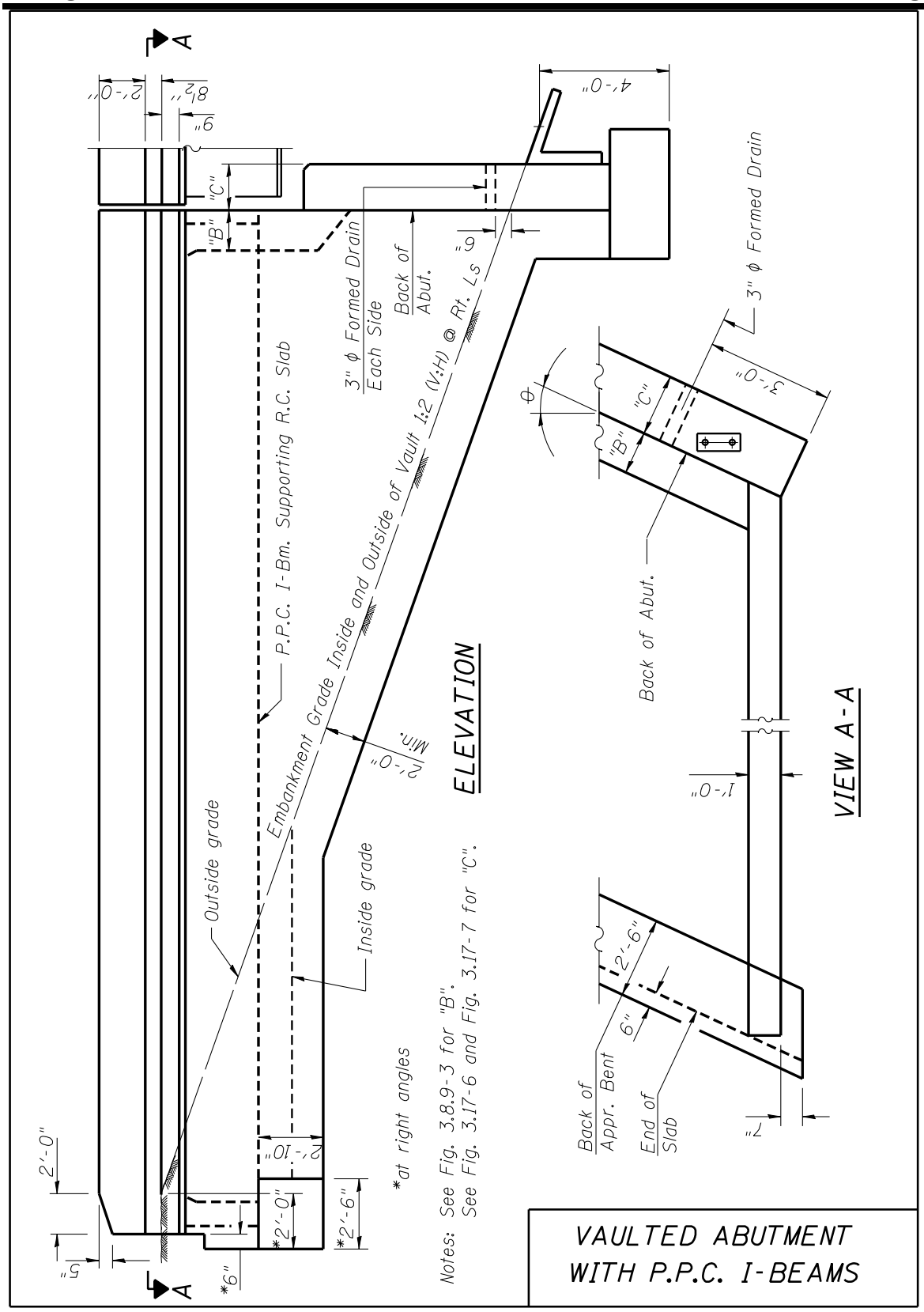
ELEVATION
VIEW A-A
VAULTED ABUTMENT
WITH P.P.C. I-BEAMS
P.P.C. I-Bm. Supporting R.C. Slab
Embankment Grade Inside and Outside of Vault 1:2 (V:H) @ Rt. ∠s
3" ϕ Formed Drain
Each Side
Back of
Abut.
3" ϕ Formed Drain
Back of Abut.
Outside grade
Inside grade
Min. 2'-0"
*at right angles
Notes: See Fig. 3.8.9-3 for "B".
See Fig. 3.17-6 and Fig. 3.17-7 for "C".
Back of
Appr. Bent
End of
Slab
2'-6"
6"
1'-0"
3'-0"
4'-0"
2'-10"
*2'-0"
*2'-6"
2'-0"
5"
*9"
9"
8½"
2'-0"
"B"
"C"
ϕ

Figure 3.8.9-1

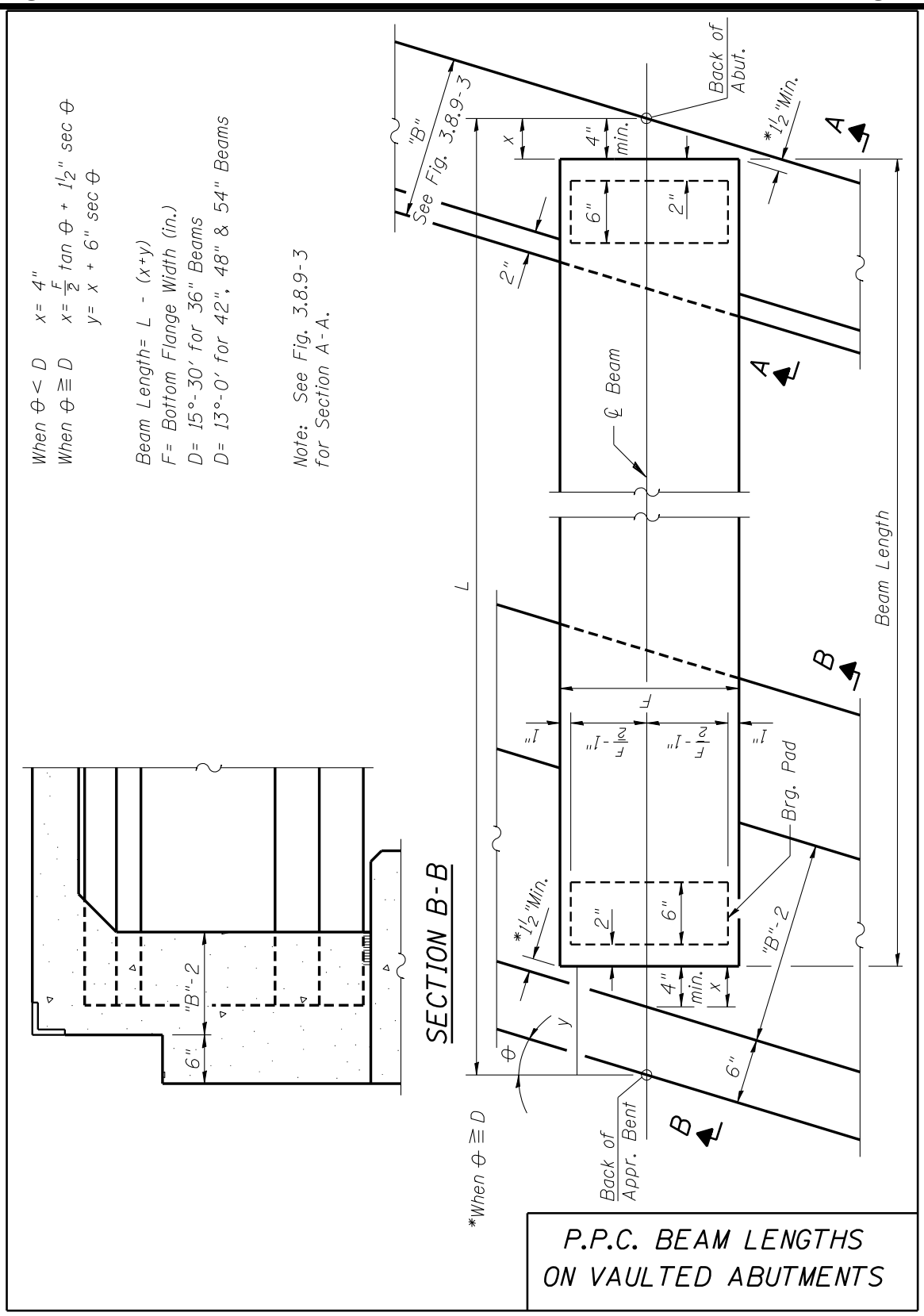
When Φ < D x= 4"
When Φ ≧ D x= F/2 tan Φ + 1½" sec Φ
y= x + 6" sec Φ
Beam Length= L - (x+y)
F= Bottom Flange Width (in.)
D= 15°-30' for 36" Beams
D= 13°-0' for 42", 48" & 54" Beams
Note: See Fig. 3.8.9-3 for Section A-A.
"B"
See Fig. 3.8.9-3
Back of Abut.
*1½"Min.
A
4" min.
x
6"
2"
℄ Beam
L
Beam Length
B
F
F/2 - 1"
1"
Brg. Pad
"B"-2
y
Φ
*When Φ ≧ D
Back of Appr. Bent
SECTION B-B
P.P.C. BEAM LENGTHS
ON VAULTED ABUTMENTS

Figure 3.8.9-2

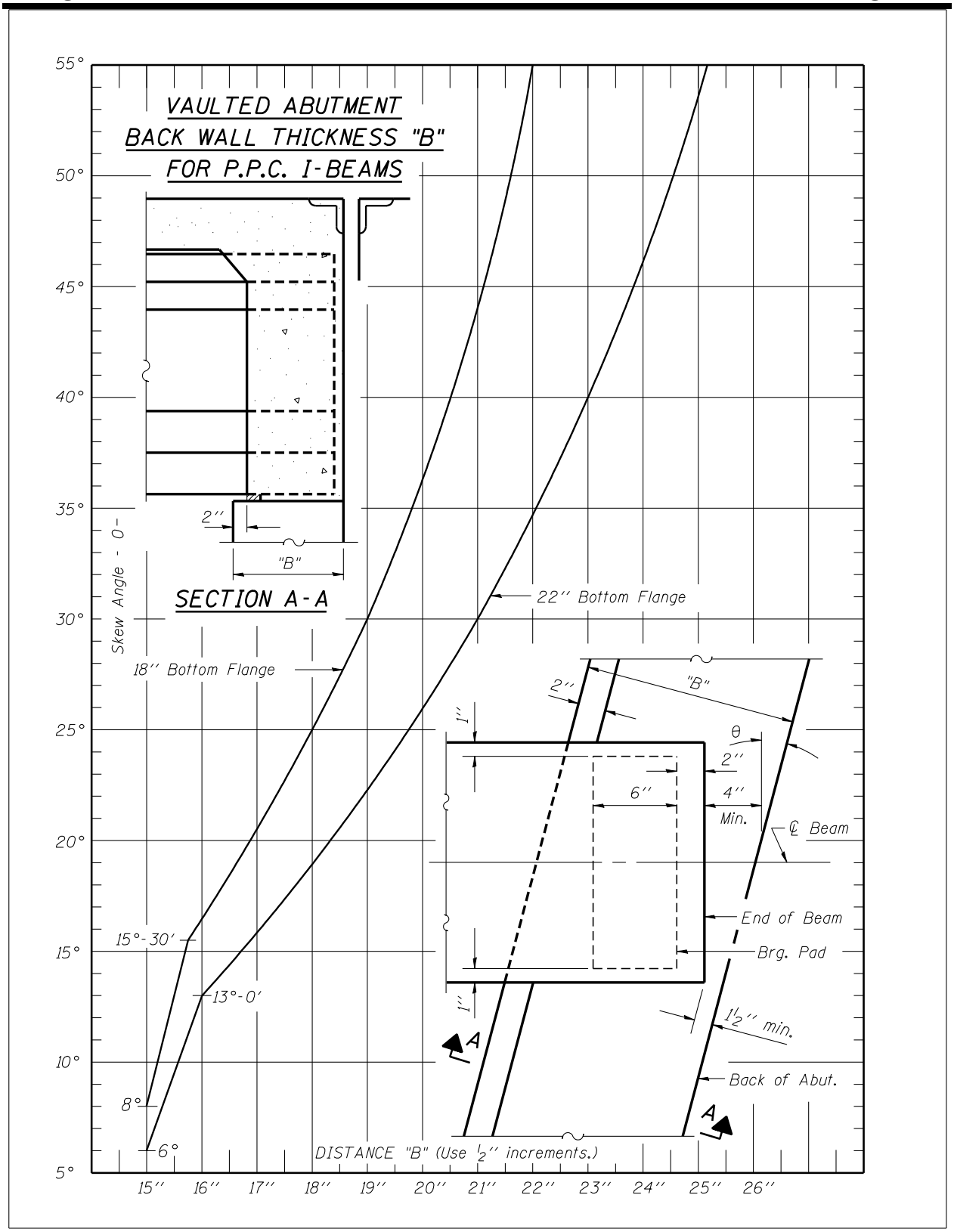
VAULTED ABUTMENT
BACK WALL THICKNESS "B"
FOR P.P.C. I-BEAMS
SECTION A-A
2''
"B"
Skew Angle - 0-
22'' Bottom Flange
18'' Bottom Flange
15°-30'
13°-0'
8°
6°
55°
50°
45°
40°
35°
30°
25°
20°
15°
10°
5°
15''
16''
17''
18''
19''
20''
21''
22''
23''
24''
25''
26''
DISTANCE "B" (Use 1/2'' increments.)
1''
6''
4''
Min.
θ
℄ Beam
End of Beam
Brg. Pad
1 1/2'' min.
Back of Abut.
A

Figure 3.8.9-3

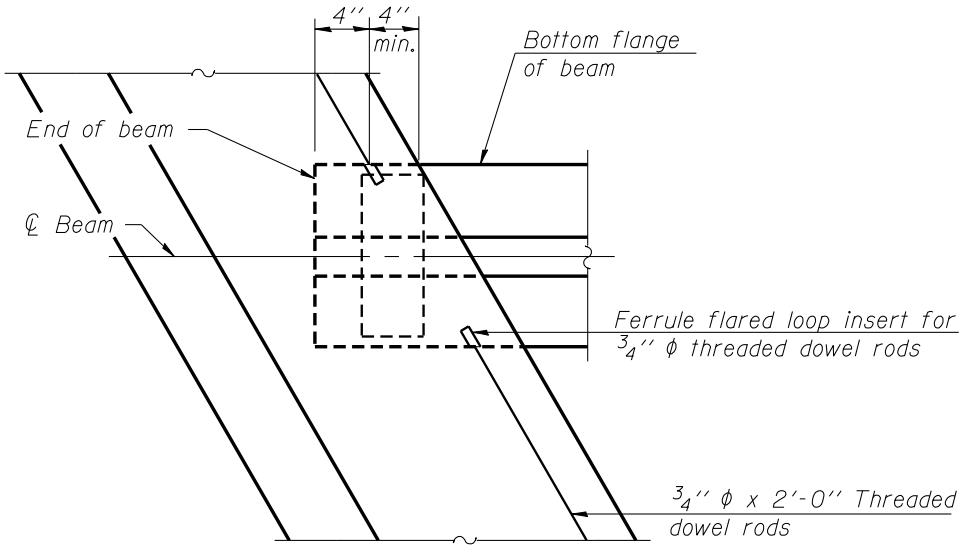

SKEWED DIAPHRAGM

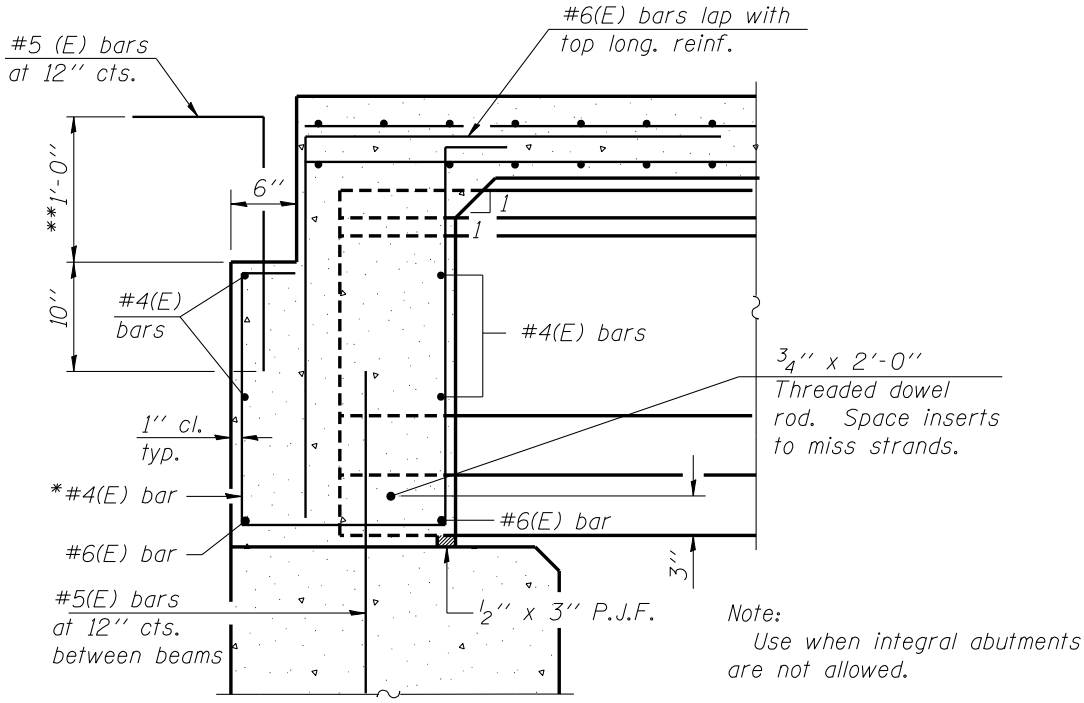

Note:
Use when integral abutments are not allowed.

SECTION THRU ABUTMENT

* Place parallel to beams and space at right angles to beams.

** When total differential seat elevation is 8'' to 1'-0'', revise dimension accordingly to maintain required clearances.

END DIAPHRAGM AT FIXED BEARING FOR PPC BEAMS ON VAULTED ABUTMENTS

Figure 3.8.9-4

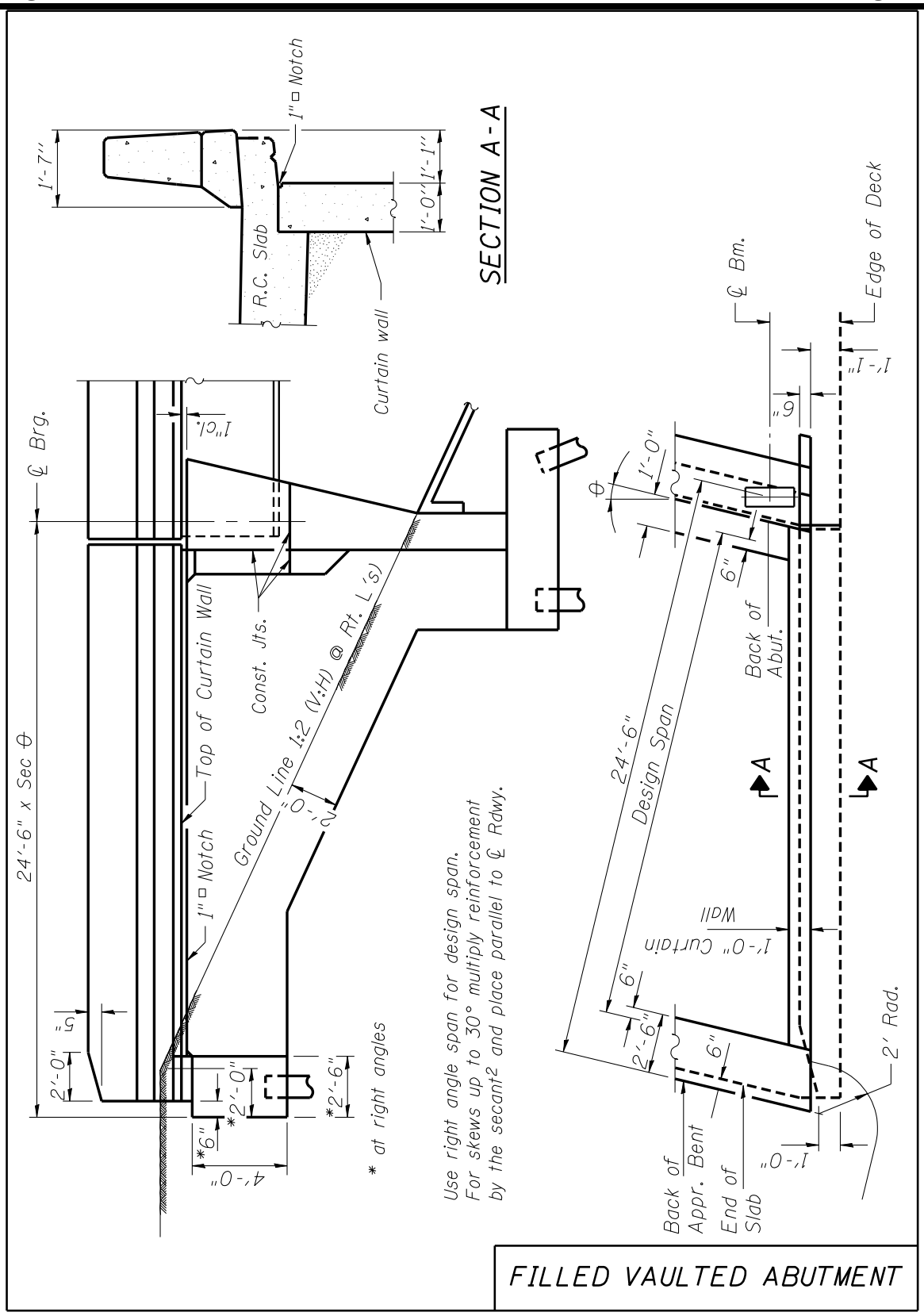
SECTION A-A
1" □ Notch
1'-7"
1'-0"
1'-1"
R.C. Slab
Curtain wall
℄ Brg.
1"℄
24'-6" x Sec θ
Top of Curtain Wall
Const. Jts.
Ground Line 1:2 (V:H) @ Rt. L's)
1" □ Notch
5"
2'-0"
*2'-0"
*2'-6"
*6"
4'-0"
* at right angles
Use right angle span for design span.
For skews up to 30° multiply reinforcement
by the secant² and place parallel to ℄ Rdwy.
℄ Bm.
Edge of Deck
1'-1"
6"
1'-0"
θ
6"
Back of Abut.
24'-6"
Design Span
A
A
1'-0" Curtain Wall
6"
2'-6"
6"
2' Rad.
Back of Appr. Bent
End of Slab
1'-0"
FILLED VAULTED ABUTMENT

Figure 3.8.9-5

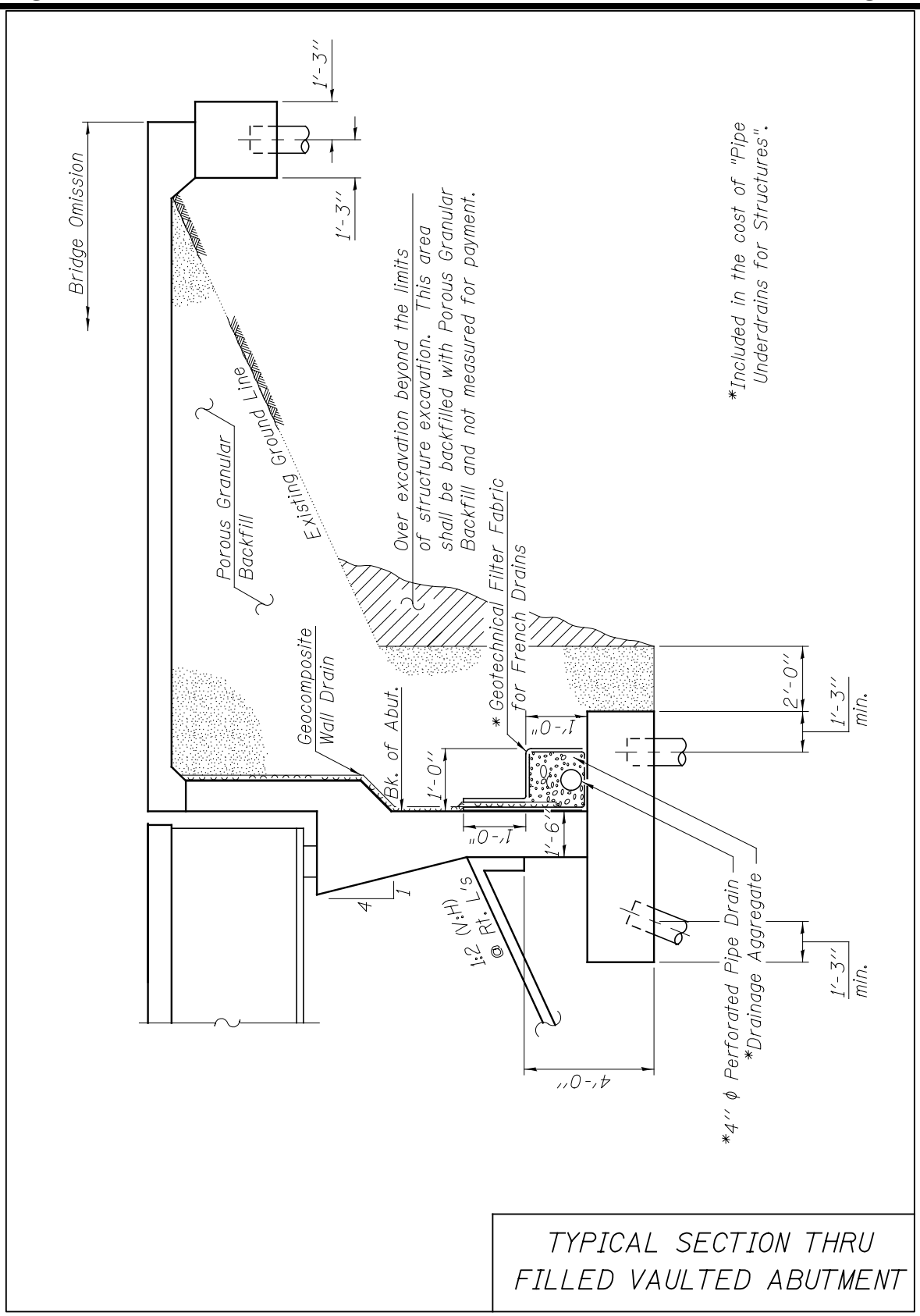
Bridge Omission
1'-3"
1'-3"
Existing Ground Line
Porous Granular Backfill
Over excavation beyond the limits of structure excavation. This area shall be backfilled with Porous Granular Backfill and not measured for payment.
*Included in the cost of "Pipe Underdrains for Structures".
Geocomposite Wall Drain
Bk. of Abut.
* Geotechnical Filter Fabric for French Drains
1'-0"
1'-0"
1'-0"
1'-6"
2'-0"
1'-3" min.
1'-3" min.
4
1
1:2 (V:H) @ Rt. L's
4'-0"
*4" ϕ Perforated Pipe Drain
*Drainage Aggregate
TYPICAL SECTION THRU
FILLED VAULTED ABUTMENT

Figure 3.8.9-6

3.8.10 Approach Slab Support

Except as noted below for semi-integral structures, the approach slab support shall be constructed level unless the total differential seat elevation is greater than 1 ft. – 0 in. When the approach seat is constructed level, the top of approach footing elevation shall be 1 ft. – 4 in. lower than the lowest back-of-abutment elevation of the bridge deck, which typically occurs at the face of parapet. When total differential seat elevation is greater than 1 ft. – 0 in., the approach seat shall follow the slope as defined at the edges of the approach slab and the dimension from the top of the approach pavement down to the approach support shall be 1 ft. – 4 in. at these locations.

For semi-integral structures, the approach support shall follow the crown of the roadway. The dimension from the top of the approach slab down to the approach support shall be 1 ft. – 4 in.

The unfactored dead load reaction of the standard approach pavement without parapets is 3.0 kips per ft. of width. The addition of two 15 ft. parapets increases the reaction to 3.4 kips for a 30 foot wide bridge. These reactions should not be considered if it reduces the load on the piles or drilled shafts. On all abutments, regardless of the type of planned approach roadway, a support shall be provided for a rigid-type approach pavement.

3.8.11 Bridge Seats

The bridge seats shall be constructed in steps poured monolithically with the abutment. The minimum step shall be ¾ in. Provide steel fill plates at bearings if steps are less than ¾ in. The elevation of each seat shall be shown on the plans. Steps 4 in. or larger shall be reinforced (see Figure 3.8.11-1). All steps shall be perpendicular to the face of the abutment cap (with a possible exception at stage construction joints). In all cases, the bridge seats between the bearings shall be sloped to drain. Figure 3.8.11-1 presents a simple sketch of typical bridge seats. See Section 3.15.4.2 for minimum required seat widths for seismic design considerations.

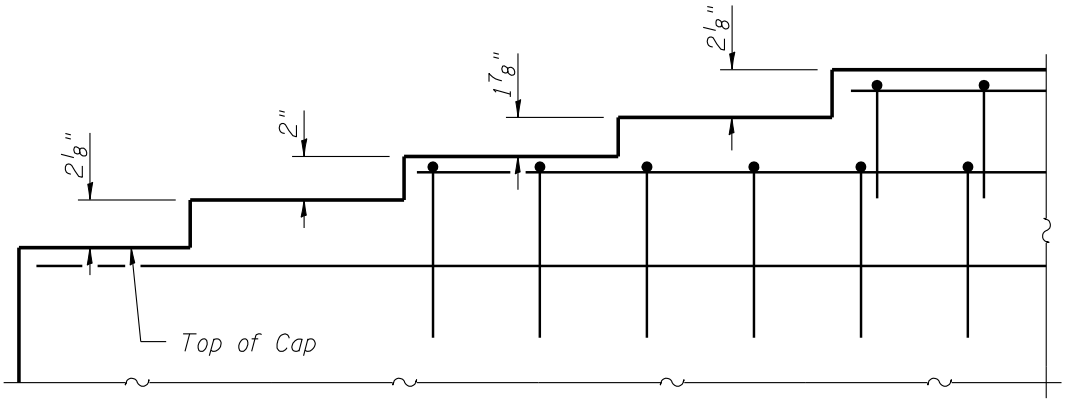

Figure 3.8.11-1

3.8.12 End of Slab Treatment

Figure 3.8.12-1 details the backwall and hatch block reinforcement at an expansion joint with rigid approach slab.

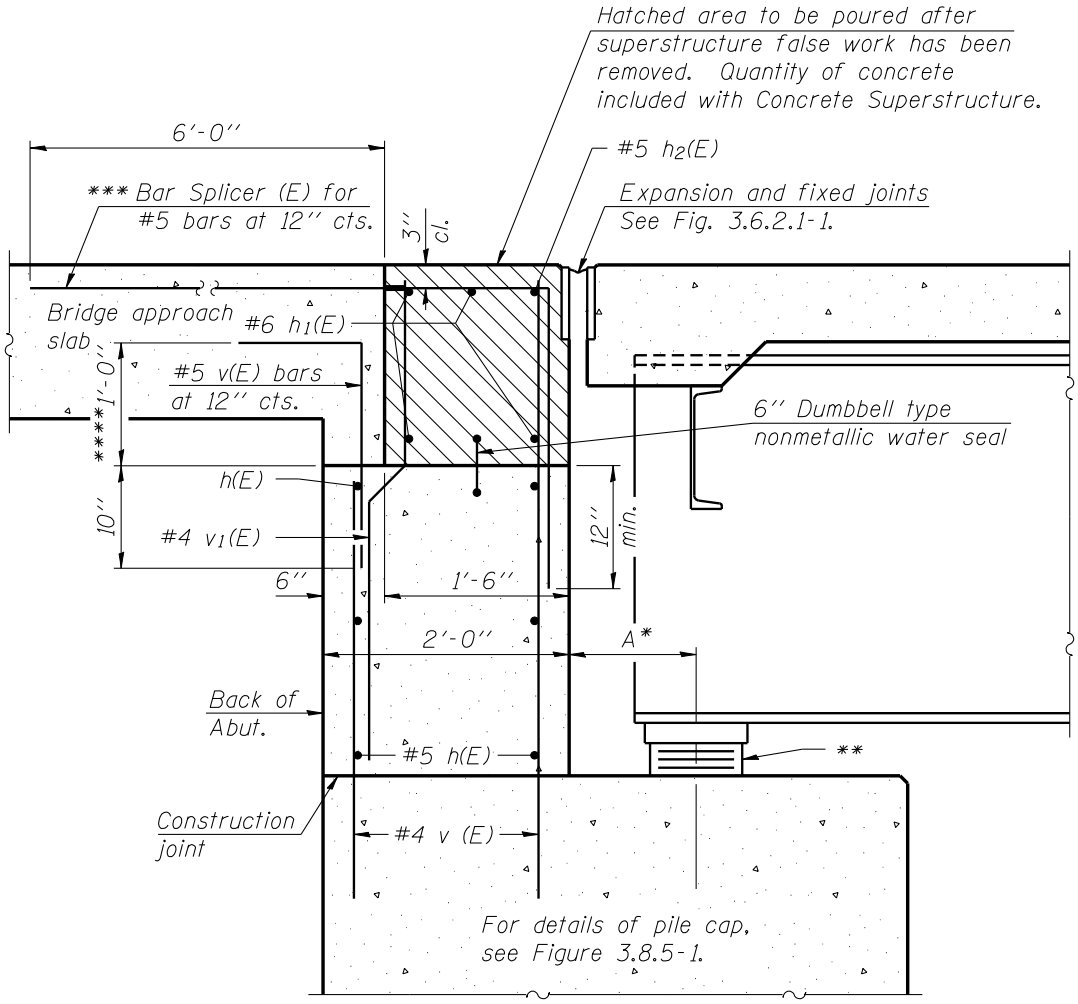

SECTION THRU TOP OF ABUTMENT

* See Figures 3.17-6 and 3.17-7 for value of "A".

** Expansion or Fixed Bearing.

*** Alternate with #4 v(E) bars. Place parallel to the beams.

**** When differential seat elevation is 8" to 1'-0", revise dimensions accordingly to maintain required clearances. See Section 3.8.10.

EXPANSION OR FIXED BEARING
RIGID APPROACH

Figure 3.8.12-1

3.8.13 Electrical Conduit in Abutments

Figure 3.8.13-1 presents details for electrical conduit in vaulted abutments. Details for electrical conduit in pile supported stub abutments are given in Figure 3.8.13-2.

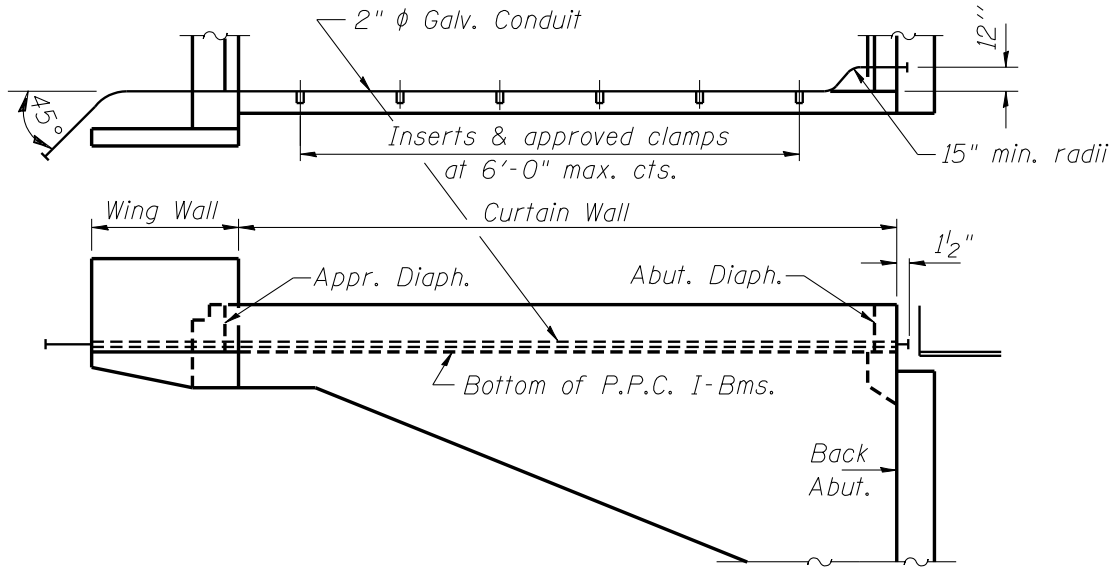

VAULTED ABUTMENT

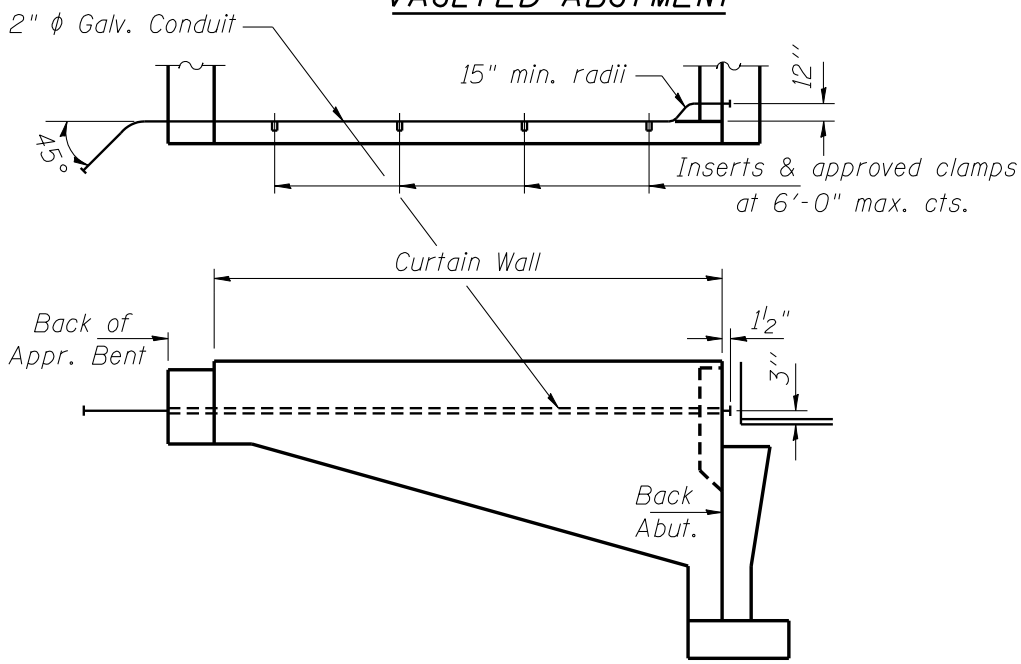

FILLED VAULTED ABUTMENT

Note:
2"ϕ Galv. Conduit shall be Sch. 40 pipe. Extend to clear end of wingwall and terminate at a point outside of the shoulder. Thread and cap each end. Cost included with Concrete Structures.

For policy regarding placement of conduit see Section 3.2.10.

ELECTRICAL CONDUIT
VAULTED ABUTMENTS

Figure 3.8.13-1

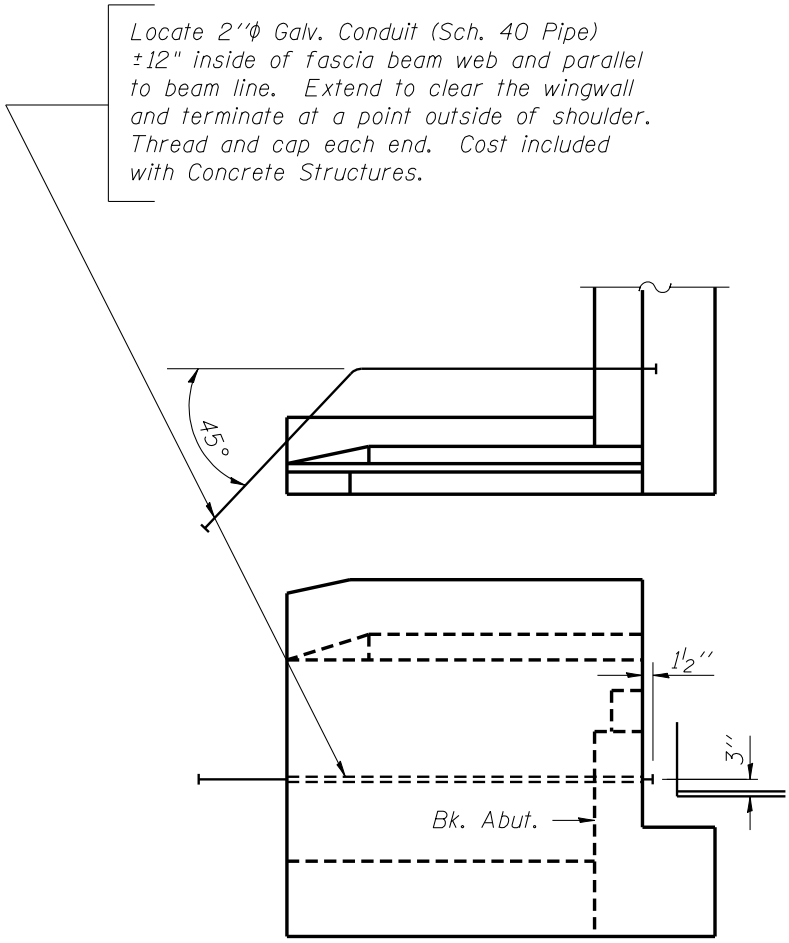

STUB ABUTMENT

Note:
For policy regarding placement of conduit, see Section 3.2.10.

ELECTRICAL CONDUIT
STUB ABUTMENTS

Figure 3.8.13-2

3.8.14 Abutments for Deck Beams

Abutment details for deck beam structures are shown in Figures 3.8.14-1 through 3.8.14-4. The general geometry is depicted for all depths of deck beams. A reinforcement scheme is also presented however the size of the reinforcement bars shall be determined by design.

Several factors shall be considered when determining the overall abutment cap length. The Standard Specifications note that the total width of the deck shall be the theoretical width plus ½ inch per deck beam joint. The cap shall ideally be an additional 6 inches wider than the deck on each end and 9 inches wider on each end when a side retainer is required at an expansion joint. See Section 3.5.7.5 for details of the side retainer. All of the aforementioned dimensions are at right angles to the centerline of the roadway and do not account for the additional cap length associated with skew. Note that the abutment cap ends are typically skewed parallel to the centerline of roadway as depicted on the base sheets.

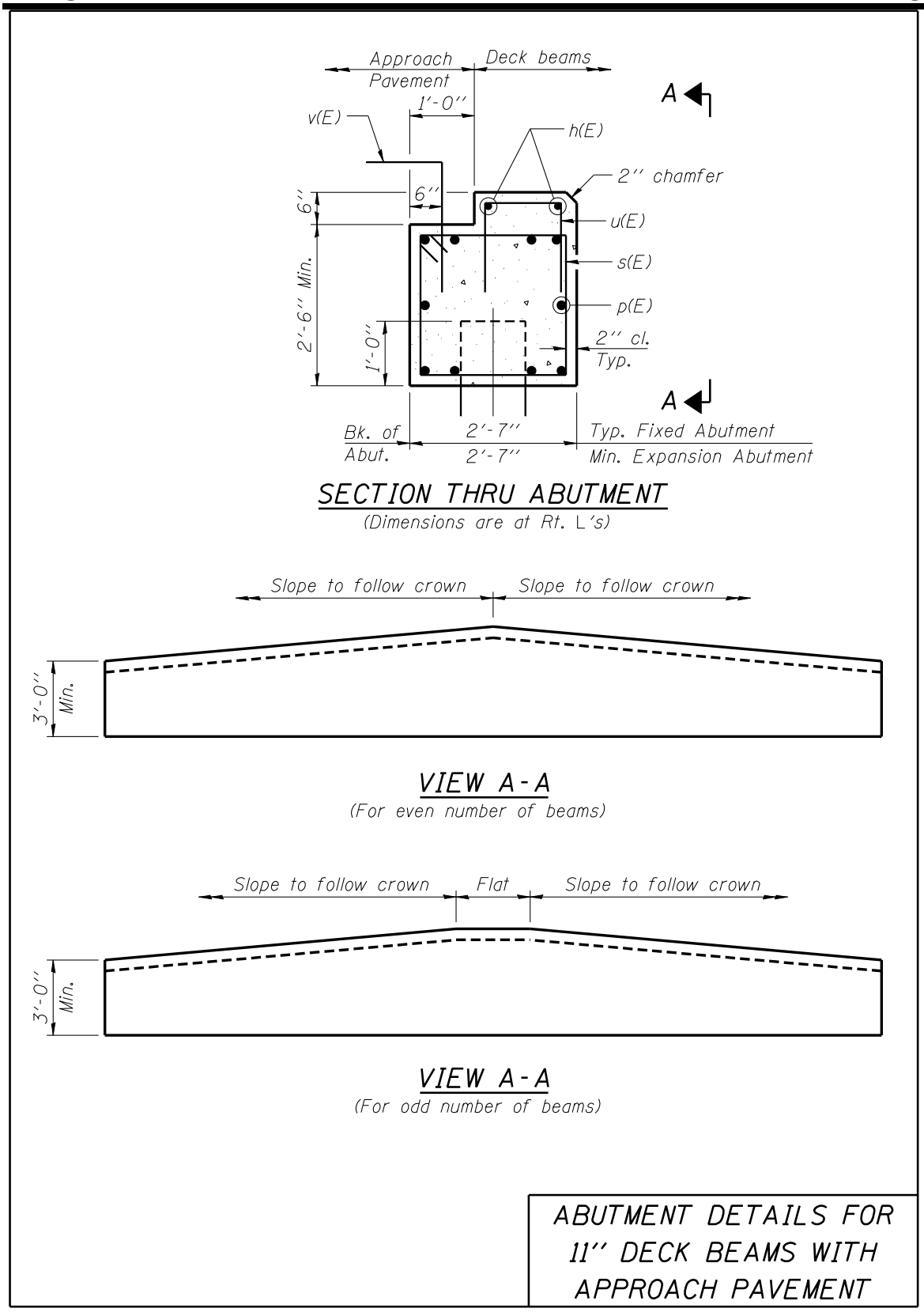

Figure 3.8.14-1

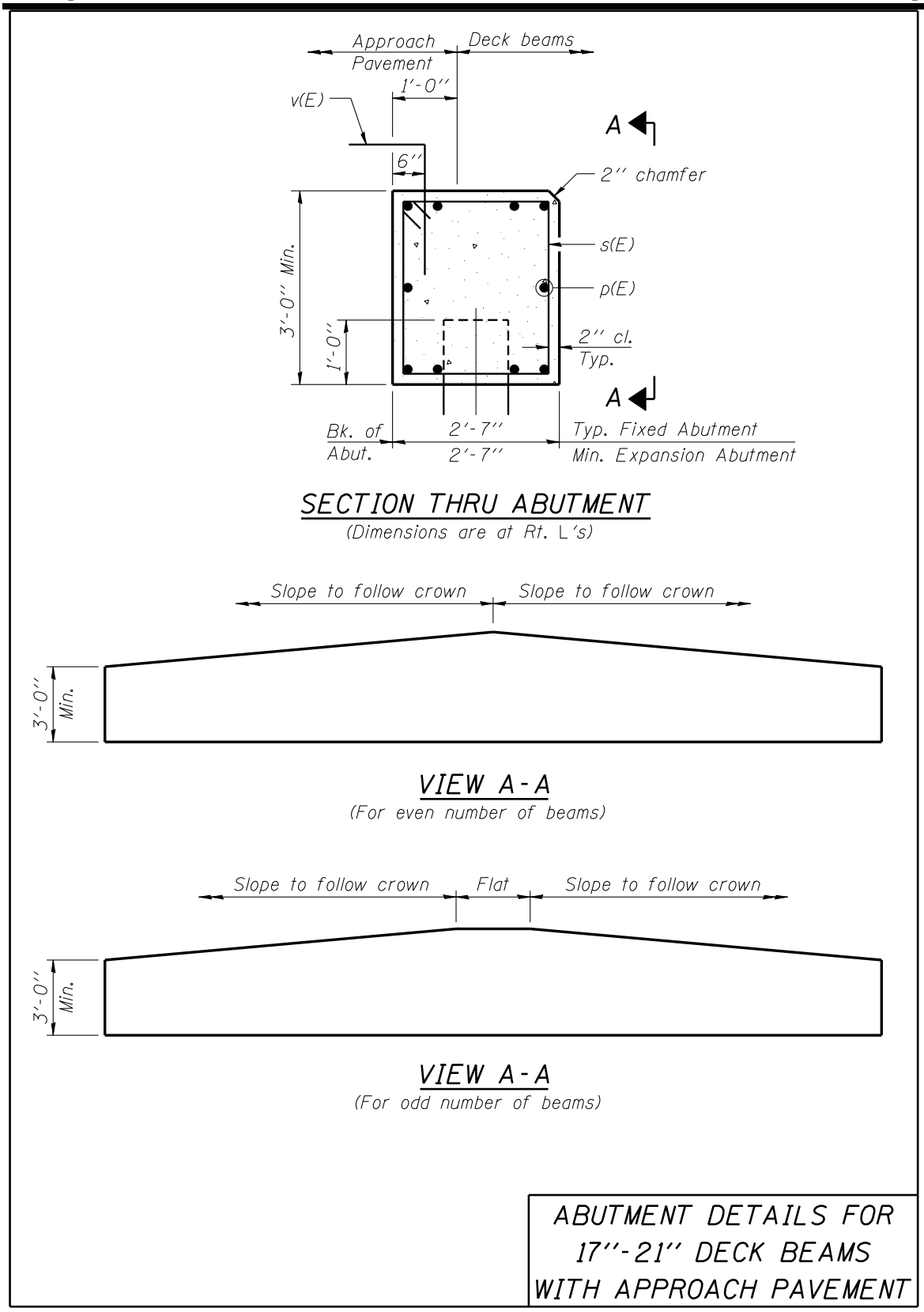

Figure 3.8.14-2

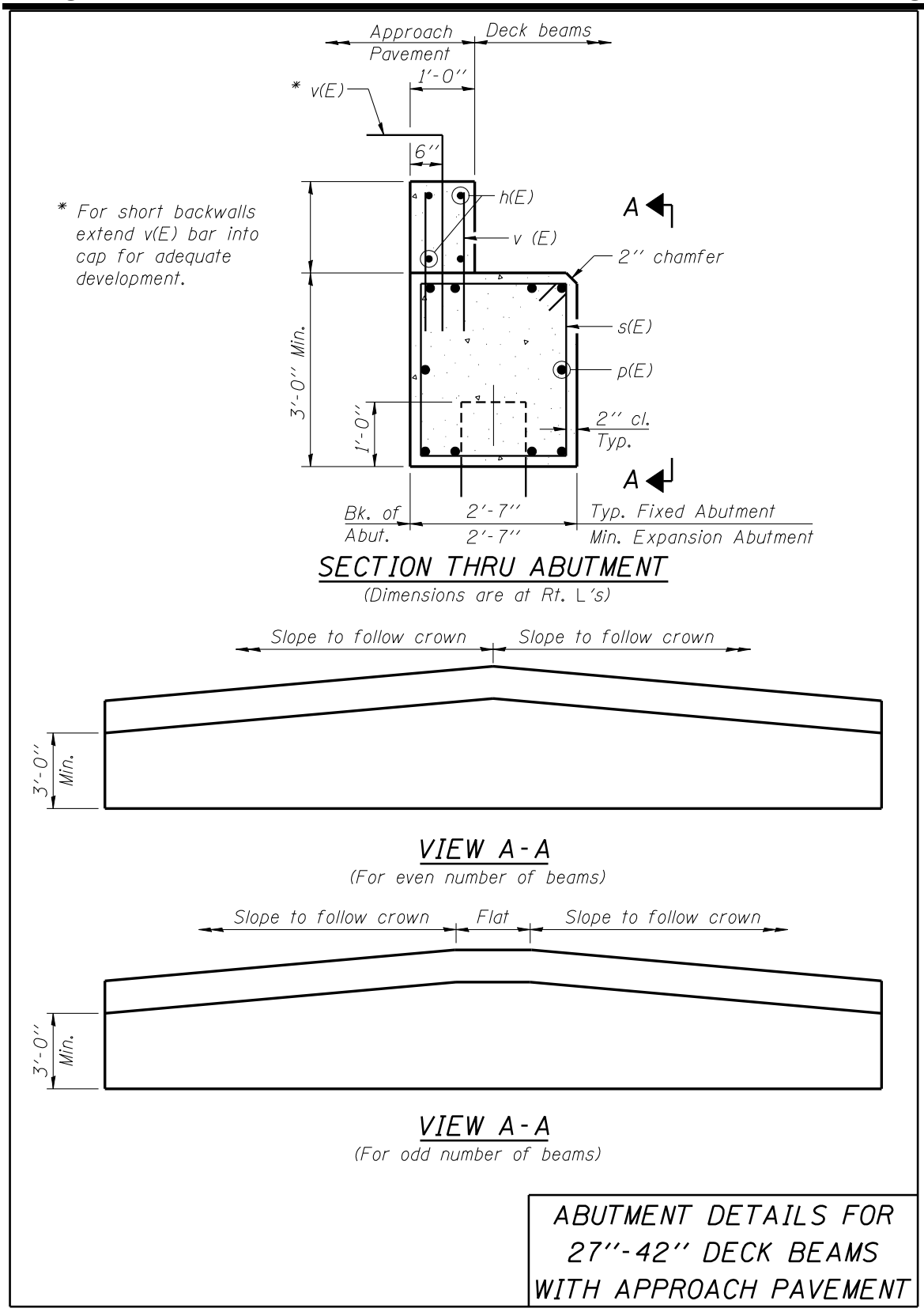

Figure 3.8.14-3

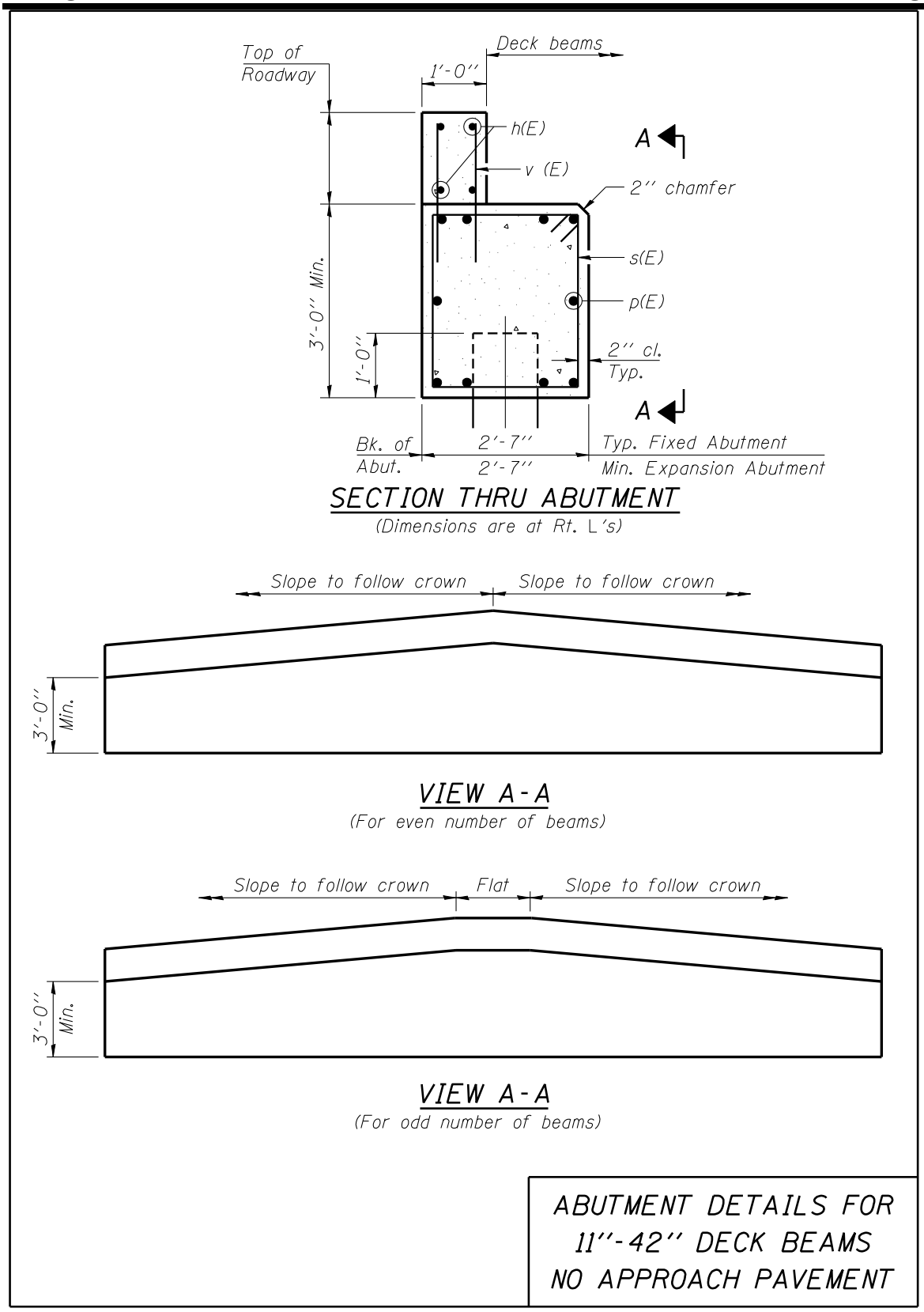

Figure 3.8.14-4

3.9 Piers

3.9.1 General

Three main categories of piers are built in Illinois: footing supported piers (on piles, drilled shafts, or spread footings); individually encased pile or drilled shaft bents; and solid wall encased pile or drilled shaft bents. Footing supported piers include multiple round and trapezoidal column bents with cap beams and crashwalls, solid walls, and hammerheads. Pile types which can be individually encased or encased in a solid wall include H-pile and metal shell. Precast concrete piles may also be encased in a solid wall. A variation on these pier types is individual drilled shafts with web walls. Section 2.3.6.2.2 provides guidance for pier selection and the basic geometric proportioning of piers. Section 4.2 provides electronic links to Base Sheets for typical pier configurations used in Illinois.

The following sections contain technical details, policies and procedures for the design of the various pier types within each of the three primary categories described above.

Piers under deck joints or within 10 ft. of the outer edge of shoulder shall have all exposed surface areas treated with Concrete Sealer. For cases involving both existing and new concrete, such as structure widening, Concrete Sealer shall only be applied to new concrete.

3.9.2 Reinforcement

For Interstate, primary route and grade separation structures, all reinforcement bars shall be epoxy coated.

Placement of reinforcement in pier caps shall be detailed so as not to interfere with anchor rod locations. Multiple reinforcement layers should be considered to alleviate congestion.

3.9.3 Pier Design Loadings

LRFD and LFD

Selected guidance, Departmental polices, and methods of analysis concerning the design loadings for piers are contained in this section. The AASHTO LRFD and Standard Specifications

should also be referenced for more complete information on such loadings as vehicular live, braking, centrifugal, temperature gradient, friction, creep, wind, etc.

3.9.3.1 Dynamic Load Allowance (Impact)

LRFD and LFD

The dynamic load allowance (impact) shall not be included in the design of elements below the bearing. Impact, however, shall be included in both the substructures and foundations when the superstructure is poured monolithically with the substructure(s) on which it bears.

3.9.3.2 Transmission of Transverse and Longitudinal Forces

LRFD and LFD

Longitudinal forces transmitted from the superstructure to the substructure, shall be as specified by AASHTO LRFD and LFD in magnitude but applied through the hinge at the bearing. Transverse forces shall be as specified by AASHTO LRFD and LFD both in magnitude and points of application.

3.9.3.3 Wind

LRFD and LFD

Articles 3.8 in LRFD and 3.15 in LFD contain the provisions for wind loadings on bridges. Except for differing load factors, the treatment of wind loadings is very similar in both specifications.

The longitudinal and transverse load transmission properties of elastomeric bearing types employed in Illinois should be considered when determining tributary areas for wind loadings on superstructures and forces in substructures. Reference Section 3.7 of this manual and LRFD Article 14.6.3 for more information.

LRFD

LRFD Articles 3.8.1.2, 3.8.1.3 and 3.8.2 apply to pier design for most bridges built in Illinois. Wind on super and substructures is covered in Article 3.8.1.2. Article 3.8.1.3 contains the provisions for wind pressure on vehicles (wind on live load) and Article 3.8.2 details vertical wind pressure (overturning force). Note that overturning wind forces are not applied simultaneously with wind on live load in LRFD. Article 3.8.1.1 should only be used when bridges or parts of bridges are more than 30 ft. above ground or water level. Article 3.8.3 (aeroelastic instability) is not applicable for the construction of typical bridges.

LFD

LFD Articles 3.15.2 and 3.15.3 are applicable to pier design for typical bridges built in Illinois. Note that overturning wind forces are applied simultaneously with wind on live load in LFD.

3.9.3.4 Temperature, Shrinkage, Creep and Settlement

LRFD and LFD

Consideration shall be given to stresses and movements resulting from variations in temperature, shrinkage and creep of concrete, and settlement. Typically, longitudinal movements are induced in piers by the superstructure expanding or contracting which can cause deflections and stresses in substructure elements. In the vertical direction; shrinkage, creep and settlement typically result in potential significant movement of piers. The Structure Geotechnical Report should provide the amount of foundation settlement if it is over ⅛ in. Insofar as shrinkage and temperature affect the design of a pier, the following criteria shall be followed:

1. The coefficient of expansion of reinforced concrete and structural steel shall be taken as 0.0000065/° F.
2. The modulus of elasticity of concrete may be taken as 3,400,000 psi.
3. The coefficient of shrinkage for concrete shall be taken as 0.0002.

On a typical multi-column grade separation pier, the temperature differential between the cap and the crashwall may be considered negligible.

3.9.3.5 Ice Forces

LRFD and LFD

LRFD Article 3.9 and LFD Article 3.18.2 contain provisions for ice forces. The rivers on which ice forces shall be considered in pier designs are as follows:

1. Mississippi River
2. Illinois River
3. Rock River
4. Fox River
5. Kankakee River
6. Iroquois River

Ice forces shall also be considered in pier designs on any other river with identified ice problems.

The considered ice thickness shall be 18 in. for locations north of Peoria and 12 in. for locations south of Peoria. The height on the pier at which the ice forces are applied shall be the average of the low and high water elevations unless more precise data is available. The floating ice criteria above shall be applied to the ends of piers for each design project.

Forces on the sides of piers shall be applied only if the stream is navigable and the shore line is a bluff type. For this condition, every favorable feature such as skew, column action under an assumed condition of a receding water level, and the inability of ice to withstand tension shall be considered to provide a footing width within reasonable limits based on sound engineering judgment.

To resist any floating ice with splitting effects at those sites where heavy ice movements are known to occur or where relatively rapid stream flow exists, the upstream nose of the pier shall be beveled and reinforced with an 8 in. x 8 in. x ½ in. steel angle of AASHTO M 270 GR 36 or GR 50, galvanized in accordance with AASHTO M 111. The angle shall be anchored to the pier with 8 in. long stud shear connectors at 12 in. alternating centers. No encasements of piers with corrosion resistant steel plates or any similar treatment is required.

3.9.3.6 Vessel Collision Forces

LRFD and LFD

LRFD Article 3.14 contains provisions for vessel collision forces. For LFD projects, the AASHTO "Guide Specifications and Commentary for Vessel Collision Design of Highway Bridges," (1991) should be referenced. Typically, piers for bridges over navigable waterways should be designed for vessel collision forces. A partial list of navigable waterways in Illinois is given in Section 2.3.9.3. If navigability or the requirement for consideration of vessel collision forces is in question, contact the BBS.

3.9.3.7 Vehicle Collision Forces

LRFD

LRFD Article 3.6.5 contains provisions for vehicle collision forces on substructures. This Article shall only be applicable for new piers for structures that cross over interstates, railroads , or non interstate roadways routinely carrying trucks with ADTT's greater than 1500, and design speeds of 55 mph or higher. For applicable bridges, unless a pier is protected as specified in Article 3.6.5.1, using a TL 5 or better barrier, (note normal guardrail, cable road guard, or impact attenuators will not be considered sufficient) it shall be designed to resist an equivalent horizontal static force of 600 kips which can act at any angle to the pier a distance of 4 ft. above ground (at the top of crashwalls in Illinois) according to Article 3.6.5.2. Abutments are not required to be designed for vehicle collisions.

For most typical grade crossings in Illinois, this design consideration should not unduly influence pier designs, i.e., the dimensions, number and size of piles or drilled shafts, and reinforcement for solid pier walls, columns, crashwalls, cap beams, and footings should not increase significantly beyond that required for non-extreme event loadings. In regions of moderate to high seismicity, the primary extreme event load case for the design of piers should be earthquake forces.

According to IDOT policy, the primary design objective for extreme event load cases is preventing the loss of a span. When considering the 600 kip vehicle collision force in design, load and resistance factors shall all be set to one (1.0). Plastic deformation of crashwalls, pier columns, foundations, etc. is permitted subject to the requirement that loss of span shall be prevented.

The 600 kip collision design force may be treated as an earthquake design force (base shear) which acts 4 ft. above the ground (or at the top of the crashwall) instead of at the centroid of the superstructure. The R-Factors recommended for seismic design in Section 3.15 may also be used. For crashwalls, the R-Factor may be taken as 1.5 for bending about the weak axis.

LFD

There are no provisions for vehicle collision forces on substructure elements in LFD.

3.9.3.8 Earthquake, Liquefaction and Scour

LRFD and LFD

See Section 3.15 for information on earthquake forces. See Sections 2.3.6.3 and 3.10.1 for information on scour and liquefaction. Non-extreme event scour design criteria typically govern over extreme event scour design criteria at bridge piers. For the rare cases where extreme event scour is a design consideration, it shall not be considered simultaneously with extreme event earthquake forces. Liquefaction (an extreme event associated with seismic loadings) considerations for structural design of piers and non-extreme event scour are also not required to be considered simultaneously.

3.9.4 Footing Supported Piers

3.9.4.1 Circular and Trapezoidal Column Bents with Cap Beam and Crashwall

Reference Base Sheets P-3 through P-7 and P-11 through P-13 for bents with trapezoidal columns. Base sheets P-24 and P-26 illustrate bents with circular columns. A pier type with drilled shaft foundations that can be considered in this pier category is shown in Base Sheet P-DSCW. It illustrates a multi-circular column bent with a crashwall.

All multi-column circular and trapezoidal piers should be designed as frames for loadings in the vertical and transverse directions. They should be treated as cantilevers for loadings in the longitudinal direction. The point of fixity for column design in the longitudinal and transverse direction should be at the top of the crashwall for grade separation piers. Caps may be designed

as continuous beams which are pin supported at the columns. Simple finite element models employing only frame (beam-column) elements normally produce verifiable results using hand calculation methods. Design of multi-column bents in regions of moderate to high seismicity is addressed in Section 3.15. Analysis methods for un-cracked sections applicable to forces which are similar to seismic base shears at lower levels of acceleration (wind, braking, centrifugal) can also be found in Design Guide 3.15.

The minimum width of any pier cap at a grade separation shall be 2 ft. - 6 in. This minimum dimension shall be followed unless additional width is needed for the bearing seats. Extended seat widths (longitudinal and transverse) are typically a concern in regions of moderate to high seismicity. See Section 3.15. Extended seat widths also facilitate future bearing replacement.

If the length of a pier cap or crashwall is greater than 90 ft., a joint should be located between bearings near mid-length. On stage constructed pier caps and crashwalls, a total width of 120 ft. or less may be permitted without requiring a joint. Joints required on pier caps shall be 1 in. open joints and joints required on crashwalls shall be beveled bonded construction joints with reinforcement continuous through them.

All piers on grade separation structures shall be provided with a crashwall which extends 4 ft. minimum above finished ground. When a guardrail is to be installed running around the face of the pier, the ground elevation should be computed at the face of the guardrail. The top of the crashwall shall run continuously level. See Section 2.3.6.2.2.

3.9.4.2 Solid Wall and Hammerhead Bents

Solid piers are shown on Base Sheets P-1, PB-1 or PC-1. It is preferable that walls remain straight. However, if required by design, walls may be battered as shown in Base Sheet PB-1. Batter may be required as a wall becomes very tall. The minimum width at the top of a solid pier shall be 2 ft. – 0 in. If the bearing seat requirements are such that more than 2 ft. – 0 in. in width is needed, consideration should be given to the use of a hammerhead grade separation pier as shown on Base Sheet P-2 or a modified hammerhead pier such as shown on Base Sheet P-10. The ends of pier stems shall be rounded when located in a stream.

Solid wall piers should be treated as cantilevers in the longitudinal direction. In the transverse direction, they should be treated as very stiff shear walls. It is permissible, however, to design solid wall piers as a single column.

Hammerhead and modified hammerhead piers may be designed in a similar manner to solid wall piers. A hammerhead, as contrasted with the modified hammerhead, however, should be considered more like a column than a wall. The overhanging cantilevered portion in the transverse direction is also a primary structural design consideration for this pier type.

3.9.4.3 Pier Footings

See Sections 3.10 and 2.3.6.3 for foundation aspects of footings and further information on requirements for pile supported, drilled shaft and spread footings.

The longitudinal reinforcement (w bars) in a pile supported footing shall be #5's at 12 in. cts. minimum placed between piles. The transverse reinforcement (t bars) shall be designed.

To design a pile supported footing for flexure and shear, the pile load shall be distributed over a width equal to 0.8X + 3.75 ft., but not wider than the longitudinal pile spacing, where X is the distance from the face of the vertical wall to the center line of the pile under consideration.

The vertical reinforcement extending from the footing into the wall for a fixed pier shall be designed to resist the moment created by the horizontal forces transmitted from the superstructure to the substructure as well as any horizontal forces which may act directly on the substructure. These forces shall be oriented to produce the maximum overturning at the pier. Note that special detailing is required for bridges located in regions of moderate to high seismicity, see Section 3.15.

Any construction joints in pier footings shall be bonded with continuous reinforcement.

3.9.5 Individually Encased Pile Bent Piers and Column Drilled Shaft Bent Piers

Individual encasement details for H-piles can be found on Base Sheet F-HP and for metal shell piles they can be found on Base Sheet F-MS. For individual column drilled shaft piers (without web walls, encasement walls, etc.) refer to Base Sheet P-DS.

Individual pile encasements are not considered structural for design purposes. For longitudinal loadings, the piles and drilled shafts should be designed as cantilevers. In the transverse and vertical loading directions, the pier may either be modeled as a collection of individual cantilevers, pin supported just below the cap beam, or as a frame. Generally, cantilever type response of this pier type increases as the height of the piles or shafts above ground increases or the depth-of-fixity below ground becomes lower. See Section 3.10 for geotechnical aspects of design for pier types in this category. Figure 3.9.5-1 details a reinforced concrete cap for pile bents. If each bearing is located above a pile (or drilled shaft), this cap may be used without designing the p(E) bars, but the minimum p(E) bar shall be a #7 bar. When the bearings are located other than directly above the piles (or drilled shafts), the p(E) bars may be designed assuming the cap is a continuous beam supported by the piles (or drilled shafts) only. Simple finite element models employing only frame (beam-column) elements normally produce results which can be verified using hand calculation methods.

A typical detail for a fixed slab bridge connection at a pier is shown in Figure 3.9.5-2.

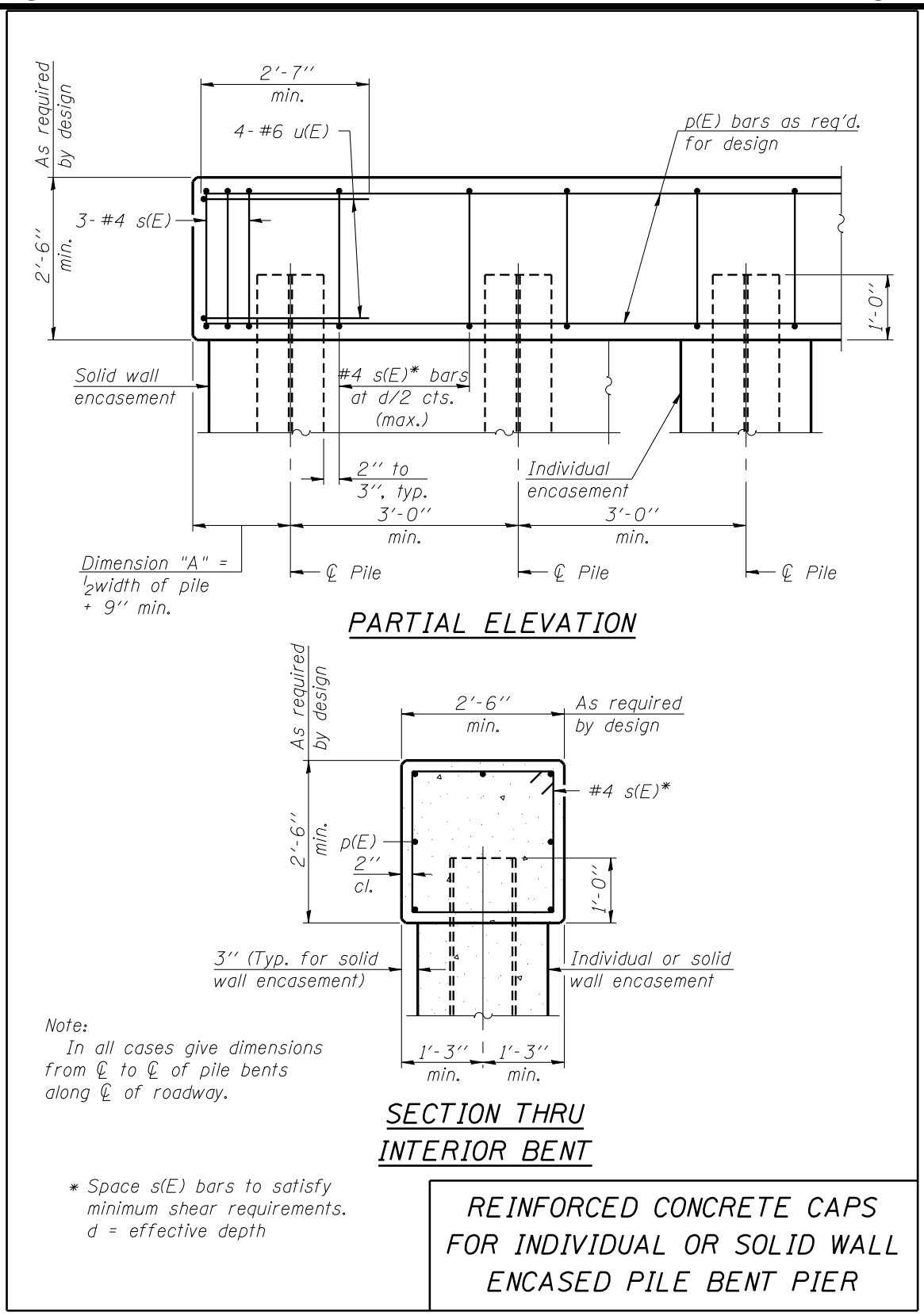
2'-7"
min.
4-#6 u(E)
p(E) bars as req'd.
for design
As required
by design
3-#4 s(E)
2'-6"
min.
1'-0"
Solid wall
encasement
#4 s(E)* bars
at d/2 cts.
(max.)
2" to
3", typ.
Individual
encasement
3'-0"
min.
3'-0"
min.
Dimension "A" =
½width of pile
+ 9" min.
℄ Pile
℄ Pile
℄ Pile
PARTIAL ELEVATION
As required
by design
2'-6"
min.
As required
by design
#4 s(E)*
2'-6"
min.
p(E)
2"
cl.
1'-0"
3" (Typ. for solid
wall encasement)
Individual or solid
wall encasement
Note:
In all cases give dimensions
from ℄ to ℄ of pile bents
along ℄ of roadway.
1'-3"
min.
1'-3"
min.
SECTION THRU
INTERIOR BENT
* Space s(E) bars to satisfy
minimum shear requirements.
d = effective depth
REINFORCED CONCRETE CAPS
FOR INDIVIDUAL OR SOLID WALL
ENCASED PILE BENT PIER

Figure 3.9.5-1

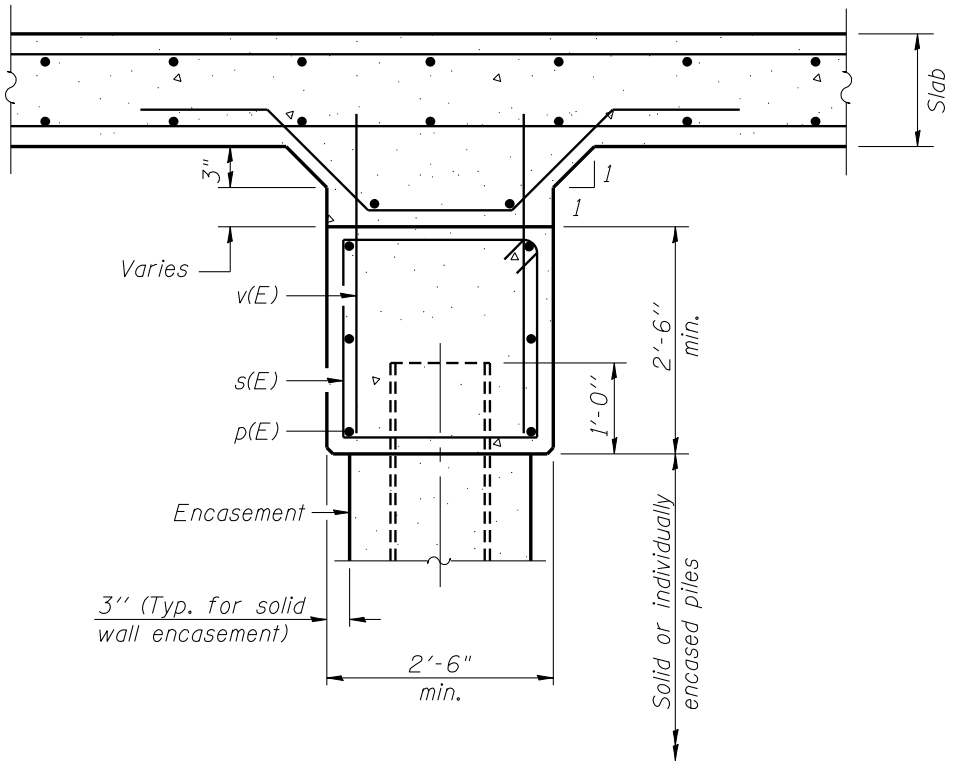

PILE BENT PIER CONNECTION FOR SLAB BRIDGES

Figure 3.9.5-2

3.9.6 Solid Wall Encased Pile and Drilled Shaft Bent Piers

Base Sheet P-DSSW illustrates a solid wall encased drilled shaft bent pier. Solid wall encased metal shell, precast and H-pile bents are similar.

Figure 3.9.6-1 illustrates the standard IDOT reinforcement for a solid wall encased pier with H-piles, metal shell piles, or precast piles. These details shall be used for all pile bent piers with these types of piles regardless of seismic region.

Solid wall encasements are not considered structural but they do influence how piers in this category should be designed. For longitudinal loadings, the piles and drilled shafts should be designed as cantilevers just as for individually encased pile bents or drilled shafts, but the wall portion should be considered essentially rigid. In the transverse and vertical loading directions, the wall should also be considered rigid with the piles or shafts below ground likely to exhibit frame action like response as opposed to cantilever behavior. Cap beams for this pier type may be designed in an analogous manner to individually encased pile or drilled shafts bents.

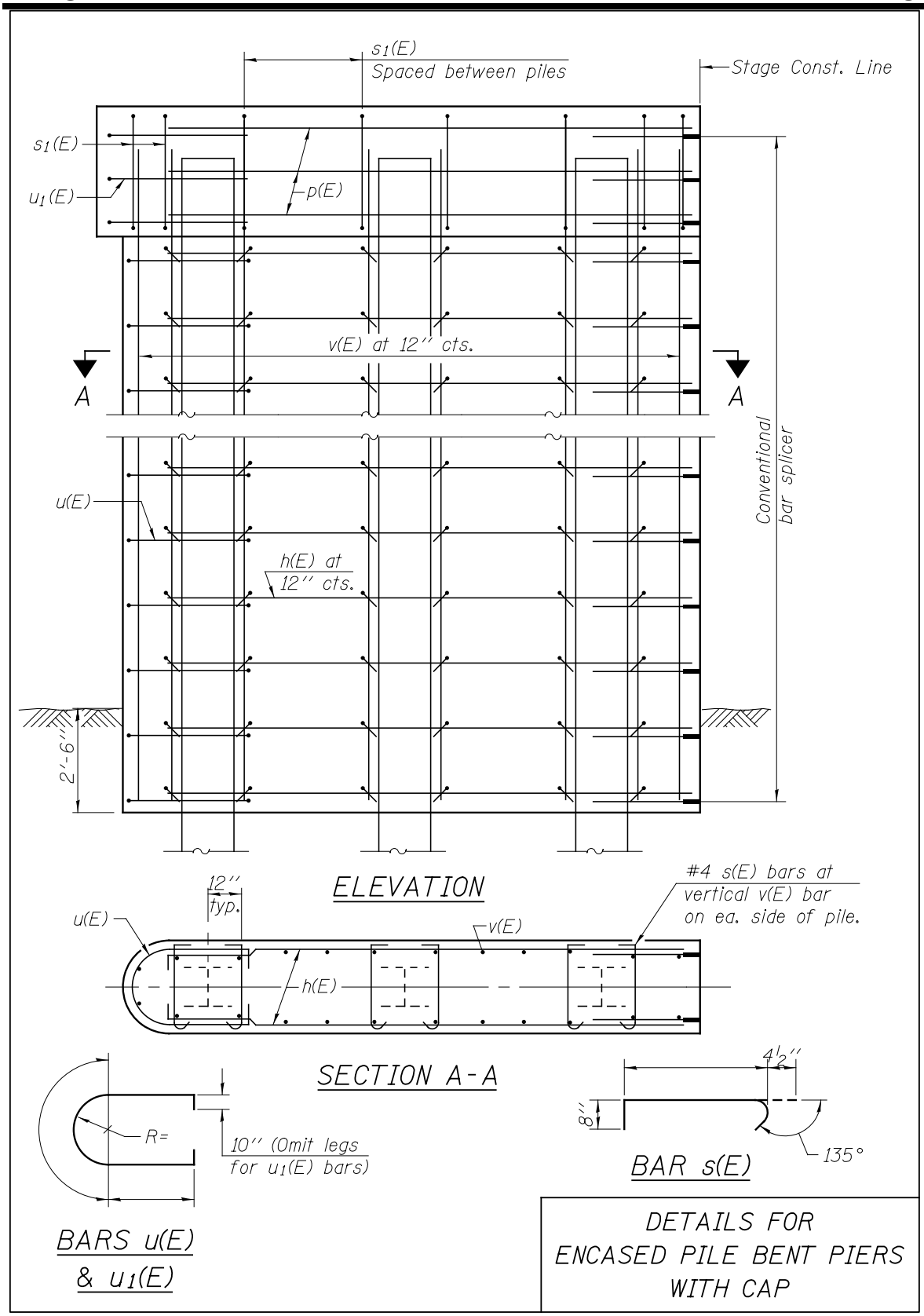
s1(E)
Spaced between piles
Stage Const. Line
s1(E)
u1(E)
p(E)
v(E) at 12'' cts.
A
A
Conventional bar splicer
u(E)
h(E) at 12'' cts.
2'-6''
ELEVATION
12'' typ.
u(E)
v(E)
#4 s(E) bars at vertical v(E) bar on ea. side of pile.
h(E)
SECTION A-A
R=
10'' (Omit legs for u1(E) bars)
BARS u(E) & u1(E)
4 1/2''
8''
135°
BAR s(E)
DETAILS FOR ENCASED PILE BENT PIERS WITH CAP

Figure 3.9.6-1

3.9.7 Other Drilled Shaft Pier Types

3.9.7.1 Column-Web Wall Drilled Shaft Bent Pier

Base Sheet P-DSWW illustrates a drilled shaft pier with web walls. Structurally, this pier type should be designed to behave as a hybrid of an individual drilled shaft pier and a solid wall encased drilled shaft pier. Hand analysis methods may be used during design, but verification with simple finite element models is recommended.

3.9.7.2 Transfer Beam Drilled Shaft Bent Pier

Base Sheet P-DSTB illustrates a drilled shaft pier with a transfer beam. The design and analysis of this pier type can be thought of as somewhat analogous to that of a two story building with bridge loadings. Vessel collisions on the transfer beam may require a dynamic analysis more complex than that for seismic loadings.

3.9.8 Bridge Seats

The bridge seats shall be constructed in steps poured monolithically with the pier cap. The minimum step shall be ¾ in. Provide steel fill plates at bearings if steps are less than ¾ in. The elevation of each seat shall be shown on the plans. Steps 4 in. or larger shall be reinforced (see Figure 3.9.8-1). All steps shall be perpendicular to the face of the pier cap (with a possible exception at stage construction joints). Figure 3.9.8-1 presents a simple sketch of typical bridge seats. See Section 3.15.4.2 for minimum required seat widths for seismic design considerations.

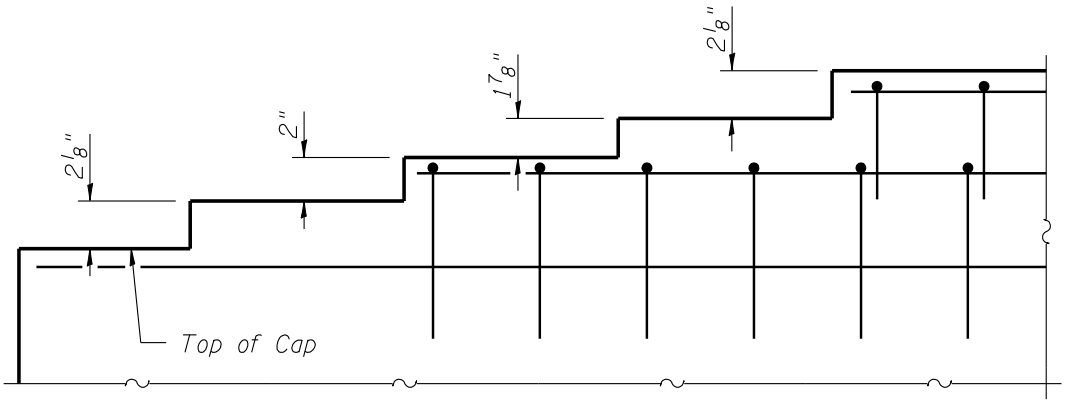

Figure 3.9.8-1

3.9.9 Piers for Deck Beams

Pier details for deck beam structures are shown in Figure 3.9.9-1. The general geometry is depicted for all depths of deck beams. A reinforcement scheme is also presented however the size of the reinforcement bars shall be determined by design.

Several factors shall be considered when determining the overall pier cap length. The Standard Specifications note that the total width of the deck shall be the theoretical width plus ½ inch per deck beam joint. The cap shall ideally be an additional 6 inches wider from all points of the deck on each end and 9 inches wider from all points on the deck on each end when a side retainer is required at an expansion joint. See Section 3.5.7.5 for details of the side retainer. These measures account for fabrication and construction tolerances to ensure adequate pier lengths. Rounded pier ends, when required, shall also be added to the pier length described above. All of the aforementioned dimensions are at right angles to the centerline of the roadway and do not account for the additional cap length associated with skew.

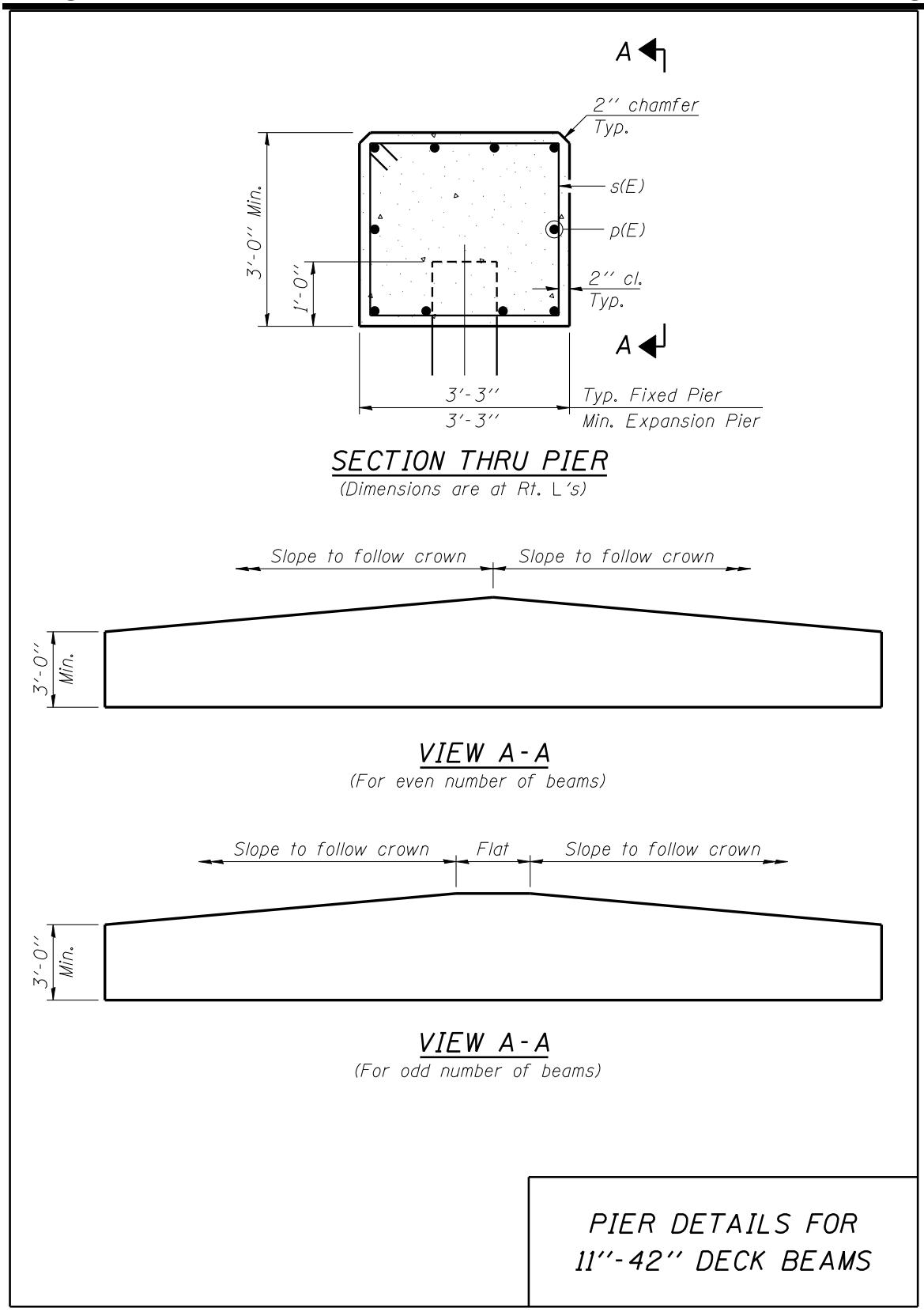
A
2'' chamfer
Typ.
s(E)
p(E)
2'' cl.
Typ.
3'-0'' Min.
1'-0''
A
3'-3''
3'-3''
Typ. Fixed Pier
Min. Expansion Pier
SECTION THRU PIER
(Dimensions are at Rt. L's)
Slope to follow crown
Slope to follow crown
3'-0''
Min.
VIEW A-A
(For even number of beams)
Slope to follow crown
Flat
Slope to follow crown
3'-0''
Min.
VIEW A-A
(For odd number of beams)
PIER DETAILS FOR
11''-42'' DECK BEAMS

Figure 3.9.9-1

3.10 Foundations

3.10.1 Piles

3.10.1.1 Introduction

Typically, piles are specified at the TSL phase when the soil conditions are not sufficient to support a spread footing and drilled shafts are found to be either too expensive or incompatible for a specific structure.

The Department generally utilizes four primary types of piles as foundation support for its structures. These are Steel, Metal Shell, Precast Concrete, and Timber. Details of piles, splices, encasement, pile shoes and other pertinent items for the first three listed pile types are given in Base Sheets F-HP, F-MS and F-PC.

An overview of pile design procedures and other pertinent design guidelines are given in following sections. Design Guide 3.10.2 provides detailed information on the recommended pile design sequence and procedure. It clarifies the role of the geotechnical engineer, the development of the pile design table, and how it should be used by the structural engineer to complete the pile foundation design. The design guide and following sections use new terminology such as nominal required bearing, factored or allowable resistance available, geotechnical losses, and separate geotechnical and structural resistance factors to help assure proper design and construction of piles in Illinois.

References which should also be consulted include the IDOT Geotechnical Manual, and the AASHTO LRFD and Standard Specifications.

3.10.1.2 Nominal Required Bearing

The nominal required bearing of a pile is the geotechnical resistance it will develop during driving and is the sum of the nominal tip and side resistances the soil or rock provides to the pile. These values are not modified by an LRFD resistance factor, ϕ, or an ASD factor of safety (FS) and do not account for any geotechnical losses which decrease the geotechnical resistance during the life of the structure. Several nominal required bearing values are provided in the Structure Geotechnical Report (SGR) for various pile types and sizes determined to be appropriate for the

subsurface conditions. A complete description of the geotechnical analyses required to use the equation is given in Design Guide 3.10.2.

3.10.1.2.1 Maximum Nominal Required Bearing

There is a maximum nominal required bearing, $R_{N\ Max}$, which can be specified for each of the standard pile types. $R_{N\ Max}$ is limited by the following empirical relationships which were developed to provide reasonable confidence that the dynamic stresses in piles during driving will not cause pile damage when driven in appropriate subsurface conditions.

Metal Shell $R_{N\,Max} = 0.85\,F_y A_s$

Where:

0.85	=	empirical dynamic driving coefficient
F_y	=	yield strength of shell (45 ksi)
A_s	=	area of shell

Steel $R_{N\,Max} = 0.54\,F_y A_s$

Where:

0.54	=	empirical dynamic driving coefficient
F_y	=	yield strength of steel pile (50 ksi)
A_s	=	area of steel pile

Precast $R_{N\,Max} = 0.3\,f_c^{'} A_g$

Where:

0.3	=	empirical dynamic driving coefficient
$f_c^{'}$	=	compressive strength of concrete (4.5 ksi precast, 5 ksi prestressed)
A_g	=	area of precast pile (14 in. x 14 in.)

Timber $R_{N\,Max} = 0.5\,F_{co} A_P$

Where:

0.5	=	empirical dynamic driving coefficient
F_{co}	=	base resistance of wood parallel to grain (2.7 ksi)
A_p	=	average area of pile (113 in.^{2} assumed)

Table 3.10.1.2.1-1 provides the maximum nominal required bearings for each pile type using the stresses and relationships provided above.

Pile Designation	Maximum Nominal Required Bearing (Kips)
Metal Shell 12”ϕ w/0.179” walls	256
Metal Shell 12”ϕ w/0.25” walls	355
Metal Shell 14”ϕ w/0.25” walls	416
Metal Shell 14”ϕ w/0.312” walls	516
Steel HP 8x36	286
Steel HP 10x42	335
Steel HP 10x57	454
Steel HP 12x53	419
Steel HP 12x63	497
Steel HP 12x74	589
Steel HP 12x84	664
Steel HP 14x73	578
Steel HP 14x89	705
Steel HP 14x102	810
Steel HP 14x117	929
Precast 14”x14”	265
Precast Prestressed14”x14”	294
Timber Pile	153

Table 3.10.1.2.1-1

Note that these maxima to don’t apply to piles set in rock, as piles set in rock are not subject to drive stresses. The maximum nominal value for piles set in rock is equal to the yield strength of the pile times the cross-sectional area.

When determining the final H-pile size to be specified, normally the lowest weight section necessary which provides the factored or allowable geotechnical and structural resistance

required should be selected. However, pile sections such as the HP 8 x 36, 10 x 57, 12 x 74, 12 x 84, 14 x 102, and 14 x 117 are rolled less frequently than other piling and thus can cause construction delays on some projects. Due to the limited supply of the above sections, designers are encouraged to utilize HP 10 x 42, 12 x 53, 12 x 63, 14 x 73 and 14 x 89 sections, when possible, to reduce pile acquisition time as well as eventually decrease cost as demand is increased on these sections.

3.10.1.3 Factored and Allowable Resistance Available

The factored resistance available, R_F, represents the net long term geotechnical capacity available at the top of a pile which resists LRFD factored axial loadings. It reduces the nominal required bearing computed by applying the geotechnical resistance factor and accounts for any geotechnical losses such as downdrag, scour, and liquefaction. For ASD, the allowable resistance available, R_A, is the net geotechnical capacity the pile can provide to resist ASD axial service loadings accounting for the required factor of safety and geotechnical losses. The LRFD equation for factored resistance available is given by:

$$R_F = \phi_G R_N - \phi_G \lambda_G (DD + Scour + Liq.) - \gamma_p DD$$

Where:

R_F	=	factored resistance available
R_N	=	nominal required bearing
DD	=	reduction from downdrag
Scour	=	reduction from scour
Liq.	=	reduction from liquefaction
ϕ_G	=	geotechnical resistance factor
λ_G	=	bias factor between WSDOT formula and IDOT estimated pile length equations (1.05)
γ_p	=	load factor for DD loading applied to pile

The ASD equation for the allowable resistance available is given by:

$$R_A = R_N / FS - \lambda_G (DD + Scour + Liq.) / FS - DD$$

Where:

R_A	=	allowable resistance available
R_N	=	nominal required bearing
DD	=	reduction from downdrag
Scour	=	reduction from scour
Liq.	=	reduction from liquefaction
FS	=	Factor of Safety for ASD
λ_G	=	bias factor between WSDOT formula and IDOT estimated pile length equations (1.05)

See Design Guide 3.10.2 for more complete descriptions of the above equations for the LRFD case. IDOT uses a geotechnical resistance factor of 0.55 in place of the LRFD Gates formula specified factor of 0.4. Extensive studies undertaken by the Department have shown that this value for resistance better represents the accuracy of the WSDOT formula for soils in Illinois. The FS of 3 for ASD design has been well documented in Illinois for many years and is conservatively accurate for the WSDOT formula.

The design resistance factor may be increased (or FS decreased) to produce shorter, more economical pile foundations when a load test is specified to be part of the construction control. The added cost of conducting a load test is significant and only justified when the calculated foundation savings is larger than the expense of a load test. When the number of piles or total lineal footage of piling on a project is significant, the designer should calculate the cost difference to determine if a load test is justified and obtain approval from the BBS Foundations and Geotechnical Unit.

When piles are to be driven in areas of moderate to high seismicity, the equations above for factored and allowable resistance available are identical except that ϕ_G for LRFD and the FS for ASD are both taken as 1.0 when considering earthquake loadings. In addition, the Scour term should be set to zero and the Liq. term should only be used when calculating the factored or allowable resistance available (R_F or R_A) for earthquake loadings (an extreme event in LRFD). For most cases, initial SGR pile design tables should provide both non-seismic (or non-extreme event) factored or allowable resistance available and seismic resistance available (LRFD or ASD). If the seismic resistance available is not provided, the geotechnical engineer may need to be contacted to recalculate the pile design table based upon seismic considerations. See Section 3.15 and Design Guide 3.10.2 for further information and guidance on seismic considerations for pile design.

3.10.1.4 Structural Resistance

In many cases, the factored geotechnical resistance (factored resistance available, R_F) will control or is less than the factored structural resistance of the piles. However, in some cases, such as for seismic loadings, piles set in rock, and scour conditions, the factored structural resistance of the piles should be checked to assure adequate structural integrity. Seismic loadings and scour conditions typically involve combined lateral and axial loadings, and/or unbraced "column" lengths for piles. If the factored structural resistance ($R_{NS} \times \phi_S$) is less than the factored loads (Q_F), either the pile size or the number of piles should be increased such that $R_{NS} \times \phi_S \geq Q_F$.

1. If the pile size is increased, both the nominal required bearing (R_N) and the factored resistance available (R_F) shown on the plans should not change, since the Q_F demand per pile would not change.
2. If the number of piles is increased, both the nominal required bearing (R_N) and the factored resistance available (R_F) shown on the plans should be decreased, since the Q_F demand per pile would decrease.

Both approaches, either an increase in pile size or an increase in the number of piles, should result in $R_{NS} \times \phi_S \approx Q_F$, $R_F \approx Q_F$ and $R_{N\ MAX} > R_N$. However, if the distance to rock is less than 20 feet, it is recommended that the piles be driven to their maximum nominal required bearing ($R_{N\ MAX}$) since the corresponding increase in geotechnical resistance can normally be obtained with minimal additional penetration/cost and may also be needed for future bridge rehabilitations. The modified load-resistance relationships would then be $R_{NS} \times \phi_S \approx Q_F$, $R_F > Q_F$ and $R_{N\ MAX} = R_N$.

It should also be noted that the factored loadings (Q_F) are at the top of piling and shall not include any factored downdrag (DD) which may be present. The LRFD strength load groups specify that the portion of DD which applies a loading to the pile be included with loadings from other applicable sources. However, it is IDOT's standard practice to require that the DD loading and DD reduction in resistance for a pile (as well as other reductions in resistance such as scour and liquefaction) be taken into account by the geotechnical engineer and incorporated in the SGR pile design table. Consequently, it shall not be added to the LRFD group loadings as suggested.

The minimum factored loading applied (Q_F) should normally be greater than zero (in compression). In cases where this cannot be accomplished using an economical pile layout (e.g.

when seismic loadings are significant), the factored resistance available (R_F) in pullout should be calculated. This calculation will provide the minimum tip elevation to be included on the plans to ensure pullout resistance. See also Section 3.15.

The AASHTO "Standard Specifications for Highway Bridges - Division I & IA" has options for ASD and LFD structural design. ASD structural design (not LFD) is recommended for structural considerations in pile foundations.

The basic methods described above for LRFD should be used for ASD design. To accomplish this, the allowable structural resistance(s) from the applicable Article(s) of the AASHTO Standard Specifications, R_{AS}, should be substituted for R_{NS} x ϕ_S, R_A should be substituted for R_F, and the service loading, Q_S, should be substituted for Q_F in the LRFD relationships above.

When piles are to be driven in areas of moderate to high seismicity, the ϕ_S factors for LRFD are generally taken as 1.0 (H-piles and metal shells) and nominal structural pile strengths in ASD should be used when considering forces due to earthquake loadings. The potential exposed lengths of piles due to liquefaction should be considered when investigating the structural capacity of piles under seismic loadings.

The scour case considered in Section 3.10.1.3 is typically not what would be considered an extreme event (see Section 3.10.1.5.1) and thus would only be considered under non-seismic load groups.

3.10.1.5 Geotechnical losses (Scour, Downdrag and Liquefaction)

LRFD and ASD

3.10.1.5.1 Scour

Design scour elevations shown on the TSL plan within the Design Scour Table are the basis for scour design at piers and abutments. When scour elevations provided on the TSL plan extend below pile encasements or bottoms of footings, the piles shall be designed, both geotechnically and structurally, to withstand the applied loadings without the presence of the foundation soils above the given elevations Refer to Section 2.3.6.3.2 for additional background on determination of design scour elevations.

The Hydraulic Report is the basis of the theoretical scour prediction and normally considers the cumulative effects of long term aggradations/degradation, general contraction scour and local pier scour. The potential for lateral channel movement that could impact scour conditions at a pier or abutment is also assessed within the Hydraulic Report. Since the Hydraulic Report is often completed at an early stage of project development, the designer should verify that final pier features (location, width, skew) and the waterway opening configuration agree with that utilized in the Hydraulic Report. The scour prediction methods are empirical and mainly based on laboratory research in sand and the local scour equations are for live-bed scour in cohesionless sand-bed streams. Only limited soil data (D_{50} soil particle size) is required to be estimated (both upstream of the bridge and at the foundation) which does not significantly influence the final scour values. Furthermore, the scour equations do not account for the increased resistance to scour which exists in some cohesive soils and rock. Consequently, it is very possible that the calculated values may generate overly conservative scour depths in some cases. As directed in Section 2.3.6.3.2, the geotechnical engineer is charged with reducing predicted scour depths generated in the Hydraulic Report at bridge locations with non-granular streambeds. Based upon actual site subsurface conditions, this reduction or adjustment of predicted scour performed by the geotechnical engineer and contained within the SGR then becomes the basis of the design scour elevations shown in a table by the planner on the TSL plan. Since the pile design table values provided in the SGR are based on the scour elevations provided in the Hydraulics Report and any adjustments recommended in the SGR, further modifications in the planning or design phase requires coordination with the geotechnical engineer to provide revisions to the pile design table.

The 100 yr. flood event is used to calculate a pile's factored resistance available (LRFD) or allowable resistance available (ASD), using the resistance factors or factor of safety provided above. The 500 yr. flood event should also be checked to assure that the applied loadings are less than the nominal resistance for extreme event loads per the AASHTO code.

The nominal value of Scour used in the factored and allowable resistance equations in Section 3.10.1.3 above is calculated by using the IDOT side resistance equations provided in Design Guide 3.10.2 This will reduce the resistance available to the designer below the nominal driven bearing by the portion of resistance provided by the layers against the pile expected to scour.

Section 10 of the IDOT Drainage Manual covers the issue of scour in detail and Section 11 provides discussion on scour countermeasures.

3.10.1.5.2 Downdrag

Downdrag (also known as negative skin friction) occurs when soil against a pile moves downward more than 0.4 in. after driving. This movement is most often caused by settlement of the foundation soils due to applied embankment loading, but may also occur due to other losses of embankment support such as liquefaction.

Downdrag is most often addressed by reducing the resistance available to the designer which, in effect, increases the pile size, the pile length or the number of piles such that they carry both structure and soil loadings. Although the term downdrag refers to the total loss of resistance available to support the structure loading at the top of the pile, it involves two distinct actions that are accounted for separately. In the factored or allowable resistance equations in Section 3.10.1.3 above, the nominal value of DD is used twice, once to reflect the loss of nominal driven bearing and again to account for the subsequent applied soil loading. Note that the nominal value of DD is only the resistance lost or the load applied (since they are of equal magnitude). DD may be computed using the IDOT side resistance equations provided in Design Guide 3.10.2 along the length of the pile applying load to the pile.

When the loss of net resistance from downdrag results in excessive added pile size, length, or number, the designer should evaluate other treatments to reduce or eliminate downdrag.

Precoring the pile locations may be specified and can be considered for design purposes to eliminate downdrag. This is most often a cost effective solution when much of the downdrag loading is applied within 25 ft. of the foundation excavation and is caused by cohesive soils. Drilling to deeper depths in more problematic soils requires specialized equipment and shaft excavation support which becomes excessively expensive and time consuming. The piles can be driven to nominal required bearing (without resistance from the precored layers) and, since they are backfilled with loose dry sand, have almost no applied loading due to the subsequent embankment settlement. The plans shall specify the diameter of pre-coring (usually 18 in.) and the elevation that the precoring shall extend to. Precoring partial depth can decrease downdrag (but not eliminate it due to consolidation and settlement of layers below the precore elevations), which may be useful in reducing the cost of additional pile size, length or number. The SGR will provide the structure designer with recommendations regarding the diameter and elevation of precoring. The pile design table will be developed using these recommendations and, as such, it is critical that the Contract plans reflect this information provided in the SGR.

On some projects, it may be possible to schedule the embankment placement in an earlier contract to ensure that settlement will have finished prior to pile driving. Even when this is not possible, a waiting period (based on settlement amount or time) may be specified to ensure that the contractor cannot drive piles until most of the settlement has occurred. In either case, no downdrag need be included in the pile design since the settlement will be less than 0.4 in.

Applying bitumen coatings to the piles can be used to reduce downdrag. However, unless the pile is driven prior to embankment placement, it is difficult to ensure that the proper part of the pile is coated such that in the final driven condition the coated part is in the soil layers which are anticipated to cause downdrag.

3.10.1.5.3 Liquefaction

When the SGR indicates that a layer or layers of soil are expected to liquefy under the design level seismic event, the pile design table in the SGR will provide both the factored resistance available (for LRFD or allowable resistance available for ASD) and the liquefaction reduced seismic resistance available (LRFD or ASD) during the seismic event.

When liquefaction occurs adjacent to a pile, the side resistance present (and reflected in the nominal driven bearing) is reduced to zero in those layers. As pore pressure in the layer is

reduced to pre-static levels, a densification of the sand particles occurs resulting in a reduction in layer thickness and settlement of all layers above. When the settlement is larger than 0.4 in., it will also produce downdrag in the non-liquefied layers.

The nominal value of Liq. used in the factored or allowable resistance equations in Section 3.10.1.3 above would be equal to the loss of nominal driven bearing in the liquefying layers calculated using the IDOT side resistance equations provided in Design Guide 3.10.2. If non-liquefiable soils are present above liquefiable layers, downdrag is produced in the non-liquefied layers and the nominal value of DD shall be computed and used in both locations in the resistance equations to account for the loss of resistance DD and the applied loading DD.

See the IDOT Geotechnical Manual for detailed guidance on liquefaction analysis.

3.10.1.6 Estimated Pile Lengths

The SGR provides pile design tables which contain a series of nominal required bearing values, R_N, the corresponding factored resistances available (LRFD), R_F, or allowable resistances available (ASD), R_A, and the estimated pile lengths. The structure designer shall select the estimated pile length from the appropriate pile design table such that the corresponding factored or allowable resistance available is greater than or equal to the factored (LRFD) or service (ASD) loading applied. Contact the geotechnical engineer if the factored loading(s) are outside the pile design table.

Design Guide 3.10.2 provides the nominal side resistance and end bearing equations which are recommended for making pile length estimates. They have been used and improved over many years.

For most cases, the pile design tables provided in the SGR will include seismic considerations directly. Section 3.15 and Design Guide 3.10.2 provide guidance and methods for using the pile design tables presented in the SGR when seismic considerations are not included in the formulation.

Note that small H-piles should be avoided when estimated piles lengths are long due to a tendency for the pile to wander. As a general rule, the upper limit for HP 8 sections is 50 ft. total length, the limit for HP 10 sections is 75 ft. and the limit for HP 12 sections is 100 ft..

When H-piles are driven to their maximum nominal required bearing and the majority of resistance is developed in rock, the estimated length of the pile shall include the amount of penetration into rock. The penetration into rock is related to the amount of resistance required as well as the type and strength of the rock. Assuming minimal thickness of rock surface weathering, penetrations may be expected to be between 2.5 to 10 ft. in shale, 1.5 to 6 ft. in sandstone, and 0.5 to 3 ft. in limestone.

3.10.1.7 Test Piles

Test piles are specified to provide site specific pile bearing vs. length data which is used by the Department during construction to supplement the estimated plan length and boring information. With these data, a final itemized list of furnished pile lengths is determined for the contractor to supply. When no test piles are specified on a project, the list of furnished lengths is taken as the estimated plan length.

The need to utilize test piles is evaluated by the geotechnical engineer and provided to the structure designer as part of the SGR pile design recommendations. Several factors are considered when determining if test piles are required and which substructures should contain test piles. Consistency of both the subsurface soils/rock conditions and the nominal required bearing at adjacent substructures can provide the confidence necessary to reduce the number of test piles necessary since one test pile can be used to represent multiple locations. Existing pile driving records may also give additional information regarding how the piles will drive, and help determine the number and location of any test piles as well as “fine tune” the estimated lengths. When the confidence level in the required length is sufficient to reduce or eliminate test piles, the estimated pile lengths are normally slightly longer to assure sufficient length. However, the cost for this additional length should normally be less than the savings produced by avoiding the test pile expense.

H-piles not reaching rock are typically the most difficult to predict, followed by metal shell piles, with H-piles driven to rock having the least variation between estimated and driven lengths. When H-piles are estimated not to extend to rock, at least one test pile should be specified on a project and often one test pile will be shown at each substructure. Use of metal shell piles almost always requires at least one test pile and, depending on the consistency in nominal required bearing and subsurface soil strengths between substructures, may need test piles at every other substructure

unit as a minimum. For either pile type, specifying at least one test pile allows for the possibility of adding test piles when necessary during construction at the established contract price. H-piles which are primarily end bearing may not require the use of a test pile if the rock surface is well defined, consistent between borings, and the borings are located near the substructures. However, where large differences in rock elevations are indicated and the penetration into the rock surface is not predictable, multiple test piles may be appropriate.

3.10.1.8 Pile Shoes

Pile shoes, as shown on Base Sheet F-HP and Base Sheet F-MS, are recommended when "hard driving" conditions are expected that would risk pile damage. In the case of H-piles, pile shoes should be used when piles are being driven to their maximum nominal required bearing and develop the majority of their capacity in hard rock (such as dolomite or limestone). Pile shoes may also be specified when piles are driven into rock at a steep batter or vertically into a sloping rock surface when there is concern for the piles to either bend a flange or not bite into the rock surface. Both metal shells and H-piles may require the use of shoes when there is evidence of dense layers, or either natural or man made obstructions which could cause damage to the pile. Metal shells are generally not as robust in negotiating difficult driving conditions as H-piles. However, H-piles do not allow inspection after driving to verify no damage as metal shells do. If damage is indicated in a metal shell, there are some repair options which can be employed.

3.10.1.9 Corrosion Protection of Piles

In most cases, corrosion of piles is not a concern since they are embedded deeply below ground where insufficient oxygen exists to allow this process to develop. However, if piles are exposed or near the surface where aggressive soil conditions potentially exist, corrosion may result in substantial decreases in pile sections. For these cases, consideration shall be given for corrosion protection. Piles may be encased in concrete, oversized to allow sacrificial steel loss; and, in unique cases, utilize a paint system, be covered with a coal tar epoxy coating, or be galvanized to address corrosion.

The most common corrosion protection measure is the use of concrete encasement. It is used to encase the piles below a substructure to ensure any unprotected steel is at sufficient depth to limit the extent of corrosion. Piles supporting abutments placed in new fill are particularly susceptible to corrosion since, over time, embankment settlements expose the very tops of the

piles. In addition, abutments often only have 2 ft. of riprap cover on one side and a pipe under drain system on the other so it is likely that the piles will become exposed to both moisture and oxygen which results in corrosion. Consequently, when pile supported abutments are located in areas with less than 4 ft. of soil cover and/or piles are subject to air and water exposure, concrete encasement shall be specified. In the case of metal shells at abutments, a reinforcement cage is placed in the top 7 ft. of the piles instead of a concrete encasement. Base Sheet F-MS and Base Sheet F-HP show details of pile encasement at abutments and piers as well as metal shell pile reinforcement at abutments (which is equivalent to encasement). Since these Base Sheets are generic, use of concrete encasement shall be indicated on the plans at the required foundation location(s).

In some cases, concrete encasement is difficult to construct and/or an increase in pile section is determined to be cost effective. In these situations, pile steel thicknesses may be increased to provide sacrificial section areas as a means to address some of the expected corrosion.

Paint systems are often used when piles are proposed to be exposed as part of a substructure.

3.10.1.10 Design for Lateral Loading

Lateral loadings applied to pile foundations are typically resisted by battering selected piles, relying on the soil/structure interaction (also known as pile flexure or fixity), or a combination of these two methods.

Use of battered piles is the most common way to obtain lateral resistance with minimal lateral deflection. Batters up to 3 in. per ft. are typical and, in some cases, 4 in. per ft. has been used. In seismic regions, the use of battered piles is not normally desirable as they produce relatively stiff foundations (as compared to vertical piles) which perform in a less ductile manner during an earthquake. In some cases, site conditions will not permit the use of or limits the amount of batter. Regardless of the amount of batter specified, there is almost always some remaining lateral loading that the piles are required to resist in flexure (fixity). When the remaining factored (LRFD) or service (ASD) lateral loading applied does not exceed 3 kips per pile (2 kips per pile for ASD), it may be assumed that the piles can provide that level of resistance without a more detailed analysis.

When the factored lateral loading per pile exceeds 3 kips for LRFD or 2 kips service for ASD, a more detailed soil structure interaction analysis shall be performed. This analysis shall determine actual pile moment and deflection such that the designer can evaluate pile adequacy. It also indicates the minimum embedment required to develop fixity and resist the applied lateral loads. In cases where the nominal required bearing can be obtained at depths less than this embedment, the minimum tip elevation should be specified in the pile data on the Contract plans. The SGR should provide some assistance in identifying the foundation soil's capacity to resist lateral pile loadings.

When piles are not expected to achieve adequate embedment to resist anticipated lateral loadings or to develop fixity, the piles may be specified to be set in rock. Although this is normally discussed in the SGR and may be specified on the TSL, it may only be identified during the final design process since necessary embedment is a function of lateral loading demands determined at this time. When piles are set in rock; the estimated top of rock, final diameter and socket depth are specified on the Final plans, and are determined with procedures which are similar to those used for drilled shafts. Note that the maximum nominal bearing may exceed Table 3.10.1.2.1-1 since the piles will not be driven. The diameter of the socket should be 18 inches if an HP8 or HP10 is used. The diameter of a socket should be 24 inches if an HP12 or HP14 is used.

Base Sheets F-HP and F-MS include splice details for H-piles and metal shell piles which develop the full moment capacity of pile sections in order to ensure the ability to carry design lateral loadings.

3.10.1.11 Pile Spacing

The designer shall make every effort to select a pile spacing at each substructure unit such that the ratio of the largest Nominal Required Bearing specified on a bridge to the smallest Nominal Required Bearing specified on a bridge not exceed 1.5. Keeping the Nominal Required Bearings at the various foundation elements within this range will help avoid the added expense of mobilizing more than one size pile hammer.

The minimum pile spacing shall be 3 times the pile diameter. In cases where H-piles are used and the majority of pile resistance is in end bearing, a smaller spacing may be approved after discussions with the Bureau of Bridges and Structures. The maximum pile spacing shall be limited to 3.5 times the effective footing thickness plus 1 ft. - 0 in., not to exceed 8 ft. - 0 in.

3.10.1.12 Pile Connection to Abutments, Piers and Footings

Piles supporting footings or non-integral abutments shall extend 12 in. into the structure. Integral abutment piling shall extend 2 ft. into the abutment to assure pile fixity. Reinforcement shall be placed to maintain 3 in. clearance from the bottom of the footing and arranged in such a manner to allow the pile to project into the footing or abutment. Pile bent piers shall have their piling extend through the individual or solid wall encasement 12 in. into the pier cap. Where piles are required to resist large lateral loadings by soil/structure interaction (also known as pile flexure or pile fixity), the piles may be embedded 2 ft. into the abutment or footing to ensure top of pile fixity and reduce deflection.

Overturning moments from seismic loads and uplift (tension) can create the need for a stronger lateral and/or axial connection between the piles and footing. See Section 3.15.

3.10.1.13 Pile Data Plan Information

Normally, all piles in a foundation unit are of the same size and are driven to the same nominal required bearing. The pile data to be included in the Contract plans shall include: 1. the pile type and size, 2. the nominal required bearing, 3. the factored or allowable resistance available, 4. the estimated pile length, 5. the number of production piles, and 6. the number of test piles. In some cases, other information shall be provided and is discussed.

1. The **Pile Type and Size** shall be provided so the contractor can bid and furnish the piles required at each foundation location. Examples of typical pile type and size callouts are as follows:

   Metal Shell –___ in. dia. x ____ in. walls ***with pile shoes***
   Steel – HP ___x ___ ***with pile shoes***
   Precast Concrete – 14 in. square ***prestressed***
   Timber – 12 in. dia. ***treated***

   Note the items in bold are examples of parameters which may or may not be specified for a project.

2. The **Nominal Required Bearing** is provided in kips to instruct the contractor as to the driven bearing the production piles shall be installed to as well as assist the contractor in selecting a proper hammer size. When piles are set in rock, the Nominal Required Bearing shall be shown as “Set in Rock” on the plans.

3. The **Factored Resistance Available** or **Allowable Resistance Available** shall be provided in kips. This value is not used by the contractor but documents the net long term axial factored or allowable pile capacity available at the top of the pile for the current and future design/rehabilitation work. It documents any reductions in geotechnical resistance that will occur after driving such as scour, downdrag, or liquefaction. It also reflects the resistance or safety factor which documents the accuracy in the method of construction control used at the time of installation.

4. The **Estimated Pile Length** is provided to give contractors a bid quantity, helps determine the length of the test pile, and when no test pile is specified, this length becomes the length furnished by the contractor. It also is used as a reference by the inspectors to identify when pile problems, such as lack of set up or improper hammer performance, are causing piles to stop short or run long. In some cases, a minimum tip elevation will be specified in addition to the estimated pile length. Normally, the minimum tip elevation will only be necessary when the piles have the potential to stop shorter than estimated resulting in inadequate lateral load strength or penetration below any geotechnical losses such as scour.

5. The **Number of Production Piles** is the total number of production piles required at the substructure or foundation covered by the pile data. When test piles are specified, the number of production piles shall be decreased by the number of test piles since they will be driven in production locations.

6. The **Number of Test Piles** shall always be stated. When no test piles are required, the designer shall specify zero test piles to document that the estimated pile length was made with sufficient confidence or added length.

7. When piles are set in rock, the **Estimated Top of Rock Elevation**, **Rock Socket Depth**, and **Rock Socket Diameter** shall be shown in the pile data on the plans.

3.10.2 Drilled Shafts

In recent years, drilled shaft foundations have become more common on IDOT projects. They can be specified when spread footings are not feasible due to insufficient soil strength, or their advantages over pile foundations outweigh the disadvantages. Among the advantages of drilled shaft foundations over piles is their ability to address vertical and lateral capacity concerns resulting from large scour depths, potential liquefaction, low soil strengths and inadequate pile embedment. This section presents an overview and discussion of design considerations and Departmental policies for the design of drilled shaft foundations. The topics discussed include: geotechnical axial resistance, geotechnical lateral resistance, geotechnical losses, deflections, structural resistance and structural detailing.

To develop an optimal drilled shaft foundation configuration, several trial analyses and designs are normally required such that both geotechnical resistance and structural adequacy are addressed. Factored (LRFD) or service (ASD) loadings shall be less than the factored (LRFD) or allowable (ASD) resistances as required by the AASHTO LRFD or Standard Specifications, respectively. Additional technical guidance on drilled shaft design is available in the publication FHWA-IF-99-025 “Drilled Shafts: Construction Procedures and Design Methods”.

3.10.2.1 Geotechnical Axial Resistance

The approved SGR should provide the designer with the necessary guidance to determine the proper side resistance and/or end bearing values for drilled shafts at a planned project site such that the number, diameter, and embedment depths for the shafts can be selected for trial and final designs. If this information is not provided, the geotechnical engineer responsible for the SGR should be contacted to verify that the appropriate parameters and soil assumptions are being used for design.

Shafts founded entirely in soil shall be designed to utilize both side resistance and end bearing. Shafts extending into rock shall, in most cases, be designed utilizing only end bearing or side resistance in rock, whichever is larger, and neglect the overburden side resistance in soil. In some cases, the quality of the rock may be so poor or the unconfined compressive strength so low, the shafts shall be designed as an “intermediate geo-material” or even an equivalent soil mass.

Bells or enlarged bases for shafts on bridge projects are permitted in limited circumstances by the Department. The soil shall be a cohesive type and the angle of inclination of the bell from vertical shall be no greater than 30°. In addition, the enlarged base of the shaft is only allowed to be considered 100% effective if the bell is dry, cleaned and inspected.

As with piles, the weight of a shaft need not be considered an applied loading or a reduction in net geotechnical resistance available to support loadings applied to the top of a shaft.

The design resistance factor may be increased (or FS decreased) to produce shorter, more economical drilled shaft foundations when a load test is specified to be part of the construction control. The added cost of conducting a load test is significant and only justified when the calculated foundation savings is larger than the expense of a load test. When the number of shafts or total volume of shafts on a project is significant, the designer should calculate the cost difference to determine if a load test is justified and obtain approval from the BBS Foundations and Geotechnical Unit.

Shafts in rock do not require a service vertical deflection check and, in most cases, shafts founded in soils will only require a vertical deflection check when settlement tolerance is uncommonly tight, when the soils are not particularly stiff/dense, or when the applied loadings are uniquely high.

3.10.2.2 Geotechnical Losses (Scour, Downdrag and Liquefaction)

Accounting for geotechnical losses on drilled shafts is more easily accomplished than with pile foundations. The loss of side resistance from scour or liquefaction is taken account of by simply neglecting those layers when determining the required embedment to provide the necessary axial resistance. The side resistance of layers producing downdrag is subtracted from the side resistance of the remaining shaft. Note that for LRFD design, the load factor is 1.25 for downdrag on drilled shafts. Refer to Section 3.10.1.5 for more a detailed discussion of geotechnical losses.

3.10.2.3 Lateral Resistance

The SGR should provide guidance on the lateral load carrying capacity of drilled shaft foundations and, if not, the geotechnical engineer should be contacted to verify that the appropriate parameters and soil assumptions are being used in the design. Software (such as L-Pile and COM624) is required on most projects to accurately determine the required embedment depth to

resist lateral loadings and the actual maximum moment as well as to calculate the anticipated shaft deflection. These programs account for the soil-structure interaction by computing the lateral soil resistance mobilized by the deflected shape of the drilled shaft. If the shaft deflection is excessive or if the embedment is inadequate to provide "fixity", the shaft embedment can be increased to help address these issues. If deflection or rotation is still unacceptable, or if the maximum moment is more than the shaft can be designed to resist, the shaft diameter should be increased, or in some cases, more shafts can be added.

3.10.2.4 Structural Resistance

Using the drilled shaft configuration which satisfies geotechnical axial and lateral resistance requirements, the shafts shall then be checked to verify that they can be designed with reasonable amounts of reinforcement steel. If the resulting reinforcement cage comprised of vertical bars and spirals is spaced to tightly, inadequate flow of concrete may result in structural defects. This circumstance would require another iteration of geotechnical axial and lateral analyses using larger diameter shafts or an increased number of shafts.

Drilled shafts are normally designed as columns with spiral reinforcement set at 6 in. centers to promote concrete flow which is critical to assure structural integrity considering challenging installation conditions and difficulties associated with inspection. In seismic areas, portions of the shaft above the ground and just below the finished grade will likely require a tighter spiral pitch since the soil may not provide adequate concrete confinement to achieve plastic moment capacity especially near the ground surface. See Sections 3.15.4.3.6 and 3.15.5.4 for further guidance on the structural design and detailing of drilled shafts for seismic loadings.

The diameter of the reinforcement cage shall be the same throughout all portions of the shaft (above ground, through soil, and in rock). Shaft diameter in rock shall be specified 6 in. smaller than the portion in soil to produce no less than 2 in. cover in rock and 5 in. cover in soil. The 5 in. cover in soil is provided to account for a wide variety of wet, dry, and/or temporarily cased installation conditions which are less than ideal. For bridge piers with columns directly above the shafts, the columns are detailed 6 in. smaller in diameter than the shafts in soil. This allows the column cage to be the same diameter as the shaft which simplifies column to cage splicing and accommodates some field adjustment when shafts are constructed out of plan location.

3.10.2.5 Shafts for Abutments, Piers, and Walls

As described in Sections 2.3.6.2.2 and 3.9, and indexed in Section 4.2, there are six drilled shaft Base Sheets for abutment and pier applications. These include open column piers, pier bents with web walls, and solid wall encased shaft piers (P-DS, P-DSWW, P-DSSW, P-DSTB, P-DSCW, and A-1-DSD). Note that at locations where there are significant seismic loads, special design considerations should be addressed. These include special reinforcement detailing as well as the potential for soil liquefaction. Drilled shafts supporting retaining walls shall utilize details taken from Base Sheets P-DSCW, and A-1-DSD.

The Final plans shall also provide the following items when applicable: estimated top of rock elevations, minimum bottom of permanent casing, and Estimated Water Surface Elevation (EWSE). See Section 2.3.6.4.2 for more guidance on determining the EWSE.

3.10.2.6 Shafts for Other Structures

Other structures under the jurisdiction of the Department also utilize drilled shaft foundations. These include high mast light towers, traffic signal mast arms, noise walls and sign structures. See the IDOT Design and Environment Manual Base Sheets covering high mast light tower and traffic signal mast arm shaft foundations and the IDOT Sign Structures Manual for guidance and Base Sheets covering overhead, cantilever and monotube sign structure shaft foundations. Noise wall shaft foundations are typically designed by the vendor.

In each of these cases, the foundations act as single, independent, relatively short shafts for which the depths are typically controlled by lateral loads. Since these structures are less sensitive to service deflections, they are generally designed using Broms Method which uses ASD loadings and allowable lateral soil pressures reduced by a factor of safety typically between 2.0 and 2.5. See AGMU 11.1: "Light Tower, Traffic Signal,Sign Structure Foundation Design" containing links to a Design Guide and a spreadsheet.

3.10.3 Spread Footings

When the TSL plan specifies spread footing foundations, the final design configuration shall be developed to satisfy several geotechnical as well as structural requirements. Under the proper loading and site conditions, spread footing foundations are used to support semi-integral and stub

abutments, bridge piers, wingwalls and retaining walls, overhead sign structures, approach slab and other structures.

Publication FHWA-IF-02-054 "Shallow Foundations" 2002, the AASHTO LRFD and Standard Specifications, and the IDOT Geotechnical Manual should be referenced when designing spread footings. See Section 3.11.1 for guidance on the design of MSE walls supported by spread footing foundation soils.

The SGR should provide the designer with recommendations and foundation treatment guidance related to bearing capacity, footing elevations, sliding resistance, global stability, ground modification and other information.

3.10.3.1 Bearing Resistance

Bearing resistance, also referred to as bearing capacity, is often the controlling parameter for which a footing is sized to assure adequate performance. The values provided in the SGR are normally sufficiently accurate for use in final design. However, the nominal bearing resistance is influenced by several factors including the footing length to width ratio, the embedment depth to width ratio as well as the applied loading inclination and eccentricity. The SGR may document some assumptions or qualifications on the use of the recommended values for design which do not fully take account of some of the factors discussed above for a particular project. As such, in cases where the design footing dimensions or loadings are not typical, the designer may wish to contact the geotechnical engineer to verify or recalculate the nominal bearing resistance using the proposed configuration and loads.

The footing should be shown to bear in soils or rock which can consistently provide the required strength throughout the footing area. This requires considerable geotechnical judgment and interpretations or extrapolations between all the soil borings or rock cores such that, upon excavation, the presence of expected foundation soils can be verified and the footing properly constructed. The SGR should provide assistance on these judgments and the approved TSL plan should provide approximate footing elevations. The actual performance of a spread footing is dependent on the soils within a minimum of one footing width below the foundation. Consequently, proper calculation of the nominal bearing resistance should include evaluation of the foundation material below the footing which is not normally verified during construction. In

cases where conditions are not uniform, the excavation may be extended up to 2 ft. deeper to allow the footing to be placed on better material or the over excavation may be filled with concrete.

The nominal bearing resistance (Q_{ult}) is the resistance available from the soil to support the footing assuming it is uniformly loaded. Since a true uniform loading is rarely the case for design, an equivalent uniform bearing pressure (Q_{eubp}) is calculated and compared to bearing resistance to determine the required footing size. The bearing resistance should be computed using the formulation of the general bearing capacity equation(s) provided in either the AASHTO LRFD or Standard Specifications including the effects of the various influence factors as appropriate. For LRFD, the form of the basic design equation includes the appropriate load and resistance factors and is given by,

$$\phi Q_{ult} \geq LF \times Q_{eubp}$$

For the Standard Specifications (ASD), the form of the basic design equation includes the appropriate factor of safety and is given by,

$$Q_{ult}/FS \geq Q_{eubp}$$

The maximum or peak trapezoidal bearing pressure will typically exceed Q_{eubp}, but should not be used in place of Q_{eubp} to size the footing. The maximum applied service bearing pressure Q_{max} shall be shown on the Final Contract plans to provide construction inspection personnel some insight concerning the applied loading demands on the foundations which assists in field verification. As a rough guide or rule of thumb, the unconfined compressive strength, Q_u, of cohesive soils (shown on the boring logs or sometimes indicated during construction inspections) should be equal to or larger than Q_{max} shown on the plans.

3.10.3.2 Sliding Resistance

Sliding is relevant for spread footings which support inclined loads or are required to support substantial horizontal forces.

IDOT typically neglects the resistance to sliding supplied by passive pressure. This is because of uncertainties associated with future excavations, variability in the backfill material and compaction, and the fact that the lateral deflections to mobilize full passive pressure are usually

larger than permitted to satisfy serviceability requirements. However, relying on some passive pressure may be warranted for very deep footings, or to resist some extreme event limit state loadings.

Sliding resistance is determined differently depending on whether the spread footing is setting on granular soil, cohesive soil, or rock. For granular soils, the sliding resistance is calculated as the vertical resultant, P, times the tangent of the friction angle for footings cast on in-place aggregate. Shear keys are not recommended for granular soils due to constructibility concerns. For cohesive soils, sliding resistance is calculated as cohesion times the effective footing width B. Lower strength clays require special attention to ensure adequate sliding resistance and, in some cases, have successfully utilized shear keys. When shear keys are required, the following note should be added to the plans.

> *The shear key excavation shall be made with care to produce near-vertical sides as shown on the plans. The footing and shear key excavation shall be cleaned of loose material and the concrete poured against undisturbed in-place soils.*

Sliding resistance on rock is evaluated in a similar manner as that for a cohesive or a granular soil, depending on rock type and weathering. The designer should note that “horizontal planes of weakness” in rock can control the design. Keying the lower portion of the footing into rock can provide substantial added “passive pressure” resistance in addition to the friction or adhesion along the base of the footing. When spread footings are used or if additional sliding resistance is required from embedment in rock, the following note should be added to the plans.

> *The bottom of footing elevation(s) shall be adjusted to ensure a minimum embedment of ____ inches in non-weathered rock. The rock excavation shall be made with near-vertical sides at the plan dimensions to allow the sides and base of the embedded portion of the footing to be cast against undisturbed rock surfaces.*

Footings to be placed on shale or sensitive silts, which have the potential to degrade upon excavation and prolonged exposure to air and water, shall have a “mud slab” or “seal coat” concrete layer placed to maintain the deposit’s integrity and sliding resistance. In these cases, the following note should be included on the plans.

The footing excavation(s) shall be undercut by 6 in. and immediately filled with seal coat concrete to prevent degradation of the exposed foundation material surface.

3.10.3.3 Settlement

While bearing and sliding resistance calculations are relatively straightforward and clearly indicate whether they will be adequate, the analysis and design to satisfy settlement is somewhat more subjective. Although the AASHTO and FHWA references noted previously provide extensive guidance on analysis of footing settlement, the designer ultimately is responsible to develop the necessary footing configuration to assure adequate short and long term performance, given the controlling foundation loadings and using the structures specific tolerance of settlement. The SGR should provide some assistance regarding expected settlement, but since the final foundation loadings, footing configuration, and deflection tolerance are not known during the development phase (TSL), the designer may need to contact the geotechnical engineer if questions or concerns arise during final design.

Most structures under IDOT's jurisdiction have some tolerance for settlement. Since accurately determining the tolerance may be somewhat subjective and the calculation of short and long term settlement, in most cases, is not exact, spread footings are normally used when a relatively high confidence in the predicted and actual settlements exists.

The load case specified in LRFD for settlement is Service I in which the load factors are 1.0. Consequently, LRFD analysis for settlement is, in effect, essentially an ASD type analysis. When the settlement analysis indicates concern for excessive foundation movement, uneven settlement, or rotation; the design may require ground improvement techniques such as removal and replacement, aggregate columns, pre-loading, waiting periods, or other project specific construction sequence requirements to assure long term performance.

3.10.3.4 Structural Resistance

Structurally, considerations for spread footing design include design for flexure, flexural shear and punching shear as appropriate for each particular project.

The minimum thickness of a spread footing under an abutment or pier shall be 2 ft. unless design calculations indicate the necessity for a greater thickness.

3.11 Retaining Walls

There are several types of retaining walls commonly designed and constructed for/by the Department. These are mechanically stabilized earth (MSE), cast-in-place T-type, soldier pile, and permanent sheet pile. Soil nailed, gabion, precast modular, segmental block and other specialized wall types are also occasionally built.

When designing retaining walls, references which should be consulted in conjunction with a project's Structure Geotechnical Report (SGR) include:

1. IDOT Geotechnical Manual
2. IDOT Culvert Manual
3. "Earth Retaining Structures Manual," FHWA-NHI-99-025, 1999
4. "Earth Retaining Systems," FHWA-SA-96-038, 1996
5. "Design and Construction of MSE Walls and Reinforced Soil Slopes," FHWA-NHI-10-025, 2009
6. "Manual for Design and Construction of Soil Nailed Walls," FHWA-SA-96-069R, 1996
7. AASHTO Standard Specifications – Chapter 5

The following subsections present design overviews and some standard details for the wall types mentioned above.

3.11.1 Mechanically Stabilized Earth (MSE)

An MSE wall is a three-dimensional stabilized mass of compacted soil, soil reinforcement and wall facing elements which essentially behaves as a rigid body to resist earth pressure and other applied loadings by its own weight. The TSL planning engineer using the SGR is responsible for analyzing the applied loadings and foundation soils as well as specifying both the reinforced mass minimum dimensions and any foundation treatment necessary to assure that global and external stability is satisfied. The final plans designer will detail the vertical and horizontal limits of the wall (discussed below) as well as the extent of any ground improvement. The contractor shall select one of the approved MSE wall suppliers who is responsible for designing the internal stability of the reinforced mass. The design shall provide corrosion allowance to ensure a design life of at least 75 yrs. The Shop Drawings and internal stability design calculations submitted by the supplier are reviewed by the BBS Foundations and Geotechnical and Design Units to ensure

compliance with the contract plan requirements and adequacy of the internal stability design. IDOT Guide Bridge Special Provision (GBSP) 38 covers MSE walls.

Figures 3.11.1-1 and 3.11.1-2 present typical sections and standard details for MSE walls. These and other presented figures in following subsections are intended to be generic enough to allow for variations between approved wall systems. The designer shall be familiar with the GBSP for MSE walls and delineate between the portions of the design that are the responsibility of the contractor and those which shall be detailed on the Contract plans.

The "top of exposed panel line," "finished grade line at front face of wall," and "theoretical top of leveling pad line" elevations are to be shown on the Final plans (see Figures 3.11.1-1 and 3.11.1-2). These elevations define retention requirements, establish bid payment limits and are the basis of the wall supplier's design. The reinforced mass of an MSE wall extends an orthogonal distance of 0.7*H* from the outside face unless the external stability design requires a wider base, where *H* is the actual height of wall at any section as defined in Figures 3.11.1-1 and 3.11.1-2. The height of the wall detailed on the plans is the distance between the theoretical top of leveling pad to the top of the anchorage slab, coping or abutment depending on the situation.

External design considerations for MSE walls include bearing resistance, sliding, settlement and overturning/eccentricity. Global stability (overall slope stability) shall also be considered. The SGR shall be referenced for pertinent project design capacities and evaluations covering the considerations listed above. The geotechnical engineer responsible for the report and its evaluations and recommendations should be consulted by the wall designer when assistance is needed.

The designer shall verify the bearing resistance obtained from the SGR is adequate by comparing it to the equivalent uniform bearing pressure (Q_{eubp}) computed using all the external loadings and weight of the reinforced mass. Applicable loads can include, but are not limited to, traffic, railroad, noise wall, impact barrier, scour, seismic, abutment footings, backslope, and embankment. Since the reinforced mass is more flexible and forgiving than a reinforced concrete footing, the resistance factor or factor of safety used in design computations is less conservative. Thus, the foundation soil's factored or allowable bearing resistance will not be the same for all wall types. Bearing resistance and settlement concerns are the two most common reasons why MSE walls are determined not to be feasible which results in other more expensive wall types being used. It is recommended that ground modification treatments be evaluated, and when cost effective,

specified in the plans to address bearing resistance or settlement concerns as opposed to simply changing wall type during the design phase. Please note that the leveling pad is not a permanent structural element and does not need to have bearing pressure or settlement satisfied. The panels are supported long-term by the soil reinforcement in shear and the leveling pad is only a construction tool to support the first row of panels.

When checking sliding, the designer should pay particular attention to the friction angle of the soil material below the base of the stabilized mass. The friction angle of the reinforced mass may be assumed to be 34°. Sliding calculations shall be performed following AASHTO recommendations and Section 3.10.3.2.

At least some settlement in MSE walls is usually expected because of their considerable weight. Some of the settlement will probably occur during construction and some afterwards. The designer is responsible for assessing the magnitude, horizontal limits, and time of settlement as well as the affects of any settlement on the wall, the infrastructure placed on top of the wall, and through the reinforced volume of soil. It should also be noted that MSE walls are well suited to handle settlements because of panel articulation and the ability of the semi-rigid soil mass to remain stable during relatively uniform movements. However, abrupt differential settlement or significant settlements occurring in walls can be problematic. As such, special wall and/or foundational treatments may be required for these cases.

The designer should note that removal and replacement of unsuitable soils, use of lightweight fill, stage construction with the use of a sacrificial face, wick drains, stone columns, a stabilized mass wider than 0.7*H* and other techniques can be utilized to address settlement, slope stability, bearing pressure or sliding deficiencies.

Regardless of whether ground modification is used, when total settlements are expected to exceed two inches, the following note should be added to the contract plans:

> *The MSE wall supplier is alerted to the fact that ___ inches of settlement are anticipated from Stations _____ to _____ and shall take appropriate measures to accommodate this settlement in the wall design.*

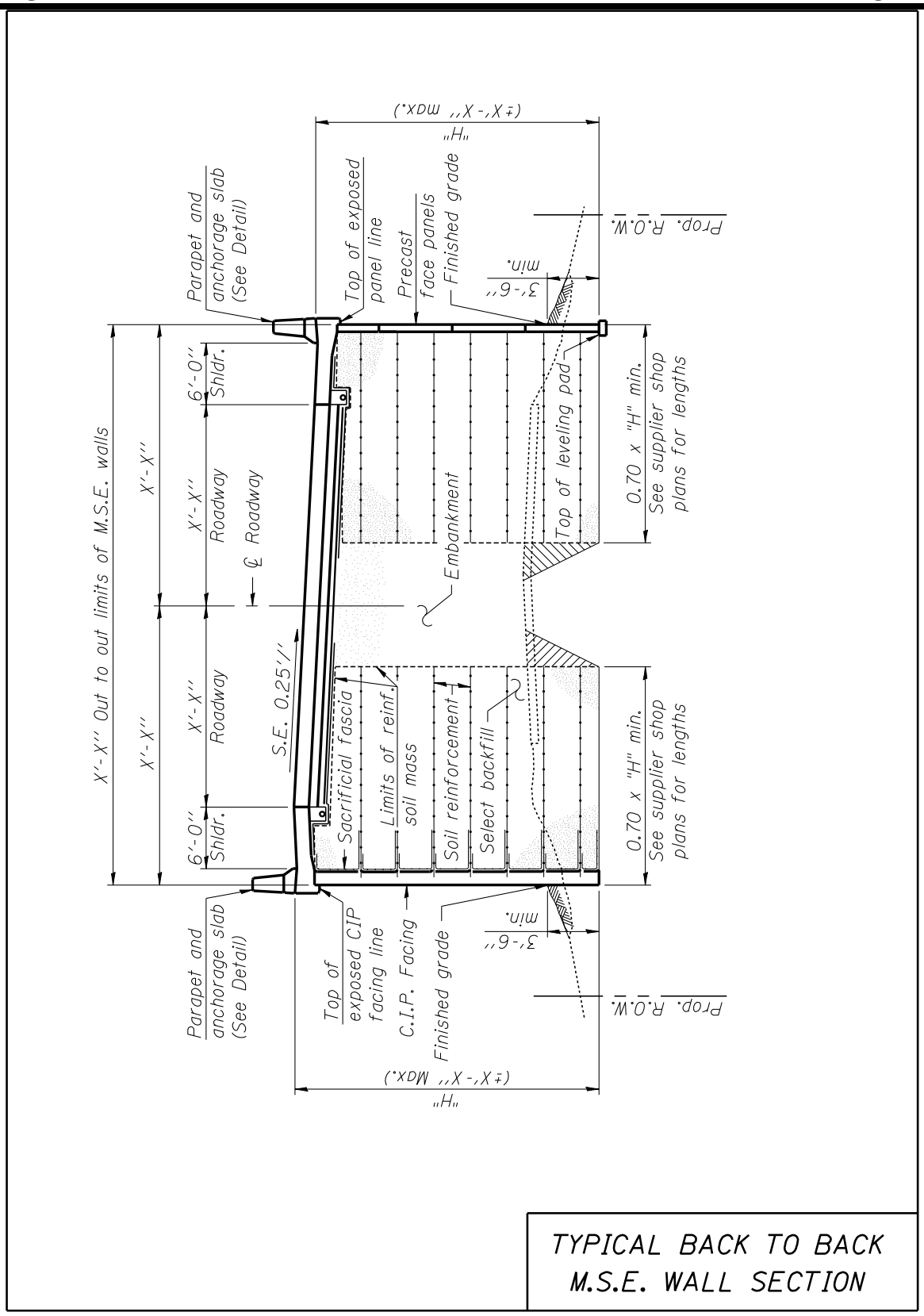

TYPICAL BACK TO BACK
M.S.E. WALL SECTION

Figure 3.11.1-1

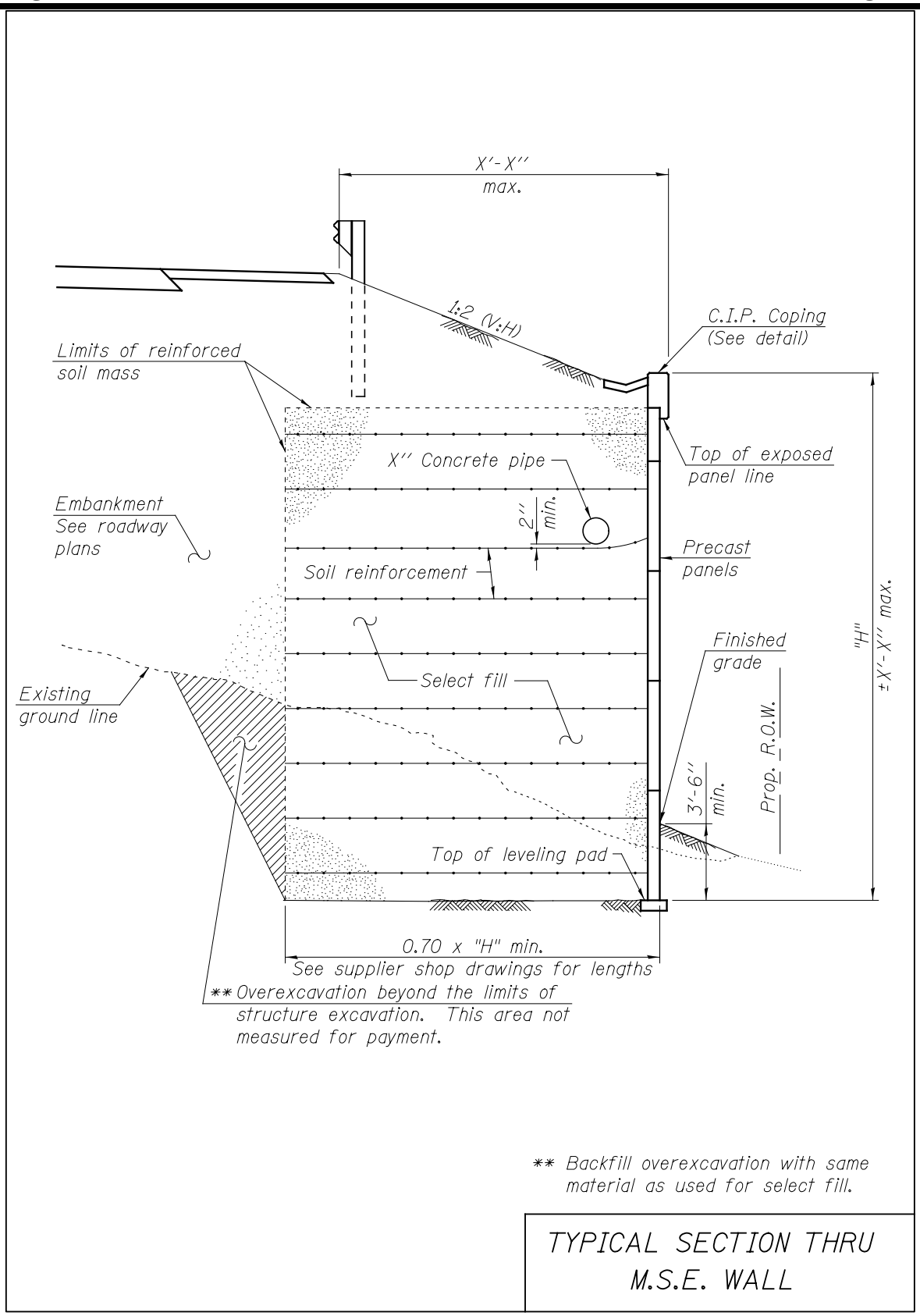

Figure 3.11.1-2

3.11.1.1 Coping

When the top of an MSE wall is not horizontal, a cast-in-place (CIP) coping, traffic barrier, or other capping design details are included on the plans to cover the panel's steps while maintaining a smooth bottom of coping line. This line on the plans is shown as "top of exposed panel line." Figure 3.11.1.1-1 presents standard details for CIP coping with precast face panels.

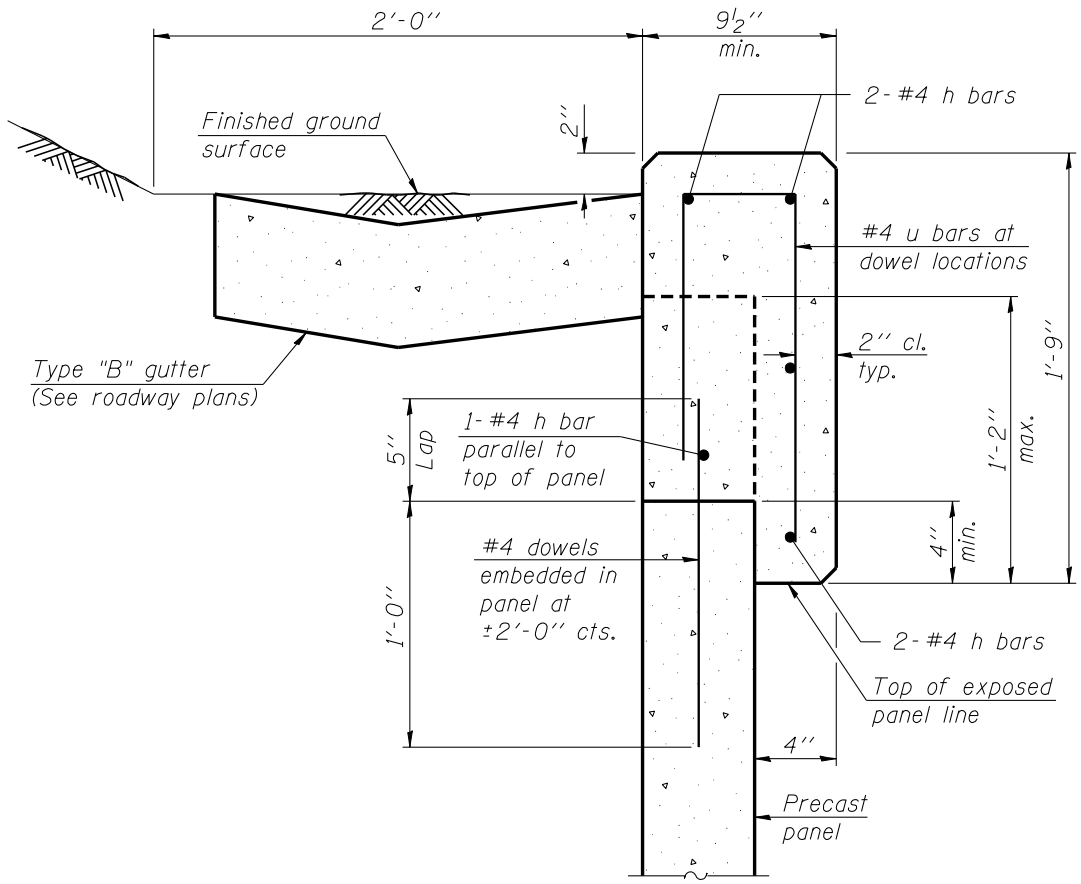

CAST IN PLACE COPING
FOR M.S.E. WALL PANELS

Figure 3.11.1.1-1

3.11.1.2 Load Transfer Around Drainage Structures and Pipe Pass Through

It is not uncommon for drainage structures to be inside of the reinforced soil mass. Figure 3.11.1.2-1 presents 3 cases of generic details for catch basins with pipes within the region of reinforced soil. Note that the MSE supplier is responsible for the design of the load transfer system around drainage structures as indicated in Figure 3.11.1.2-1.

Two standard details for pipes passing through cast-in-place wall panels are shown in Figure 3.11.1.2-2. As indicated in the figure, the wall supplier shall determine/design some of the required dimensions for the details in accordance with the specific situation.

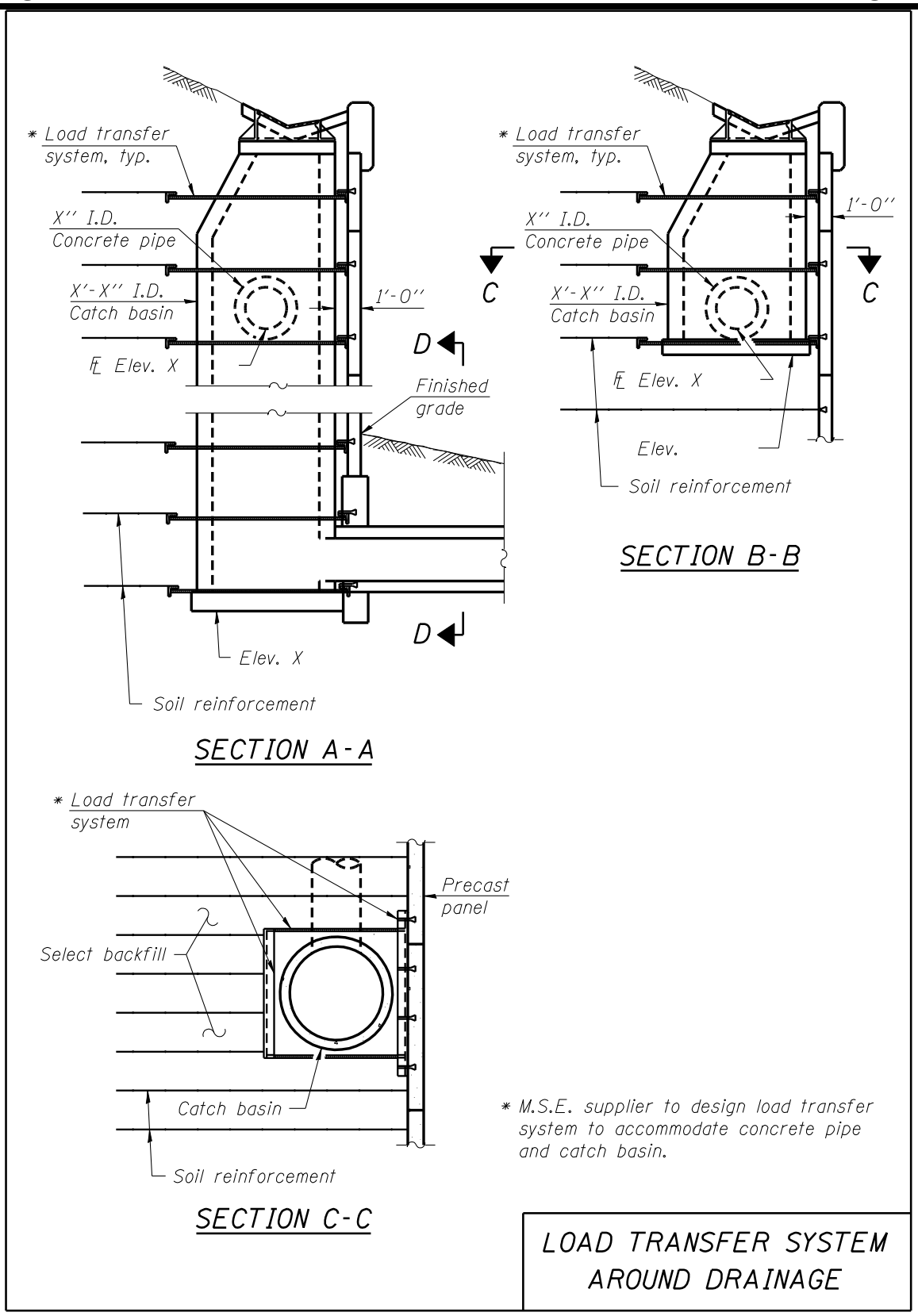

Figure 3.11.1.2-1

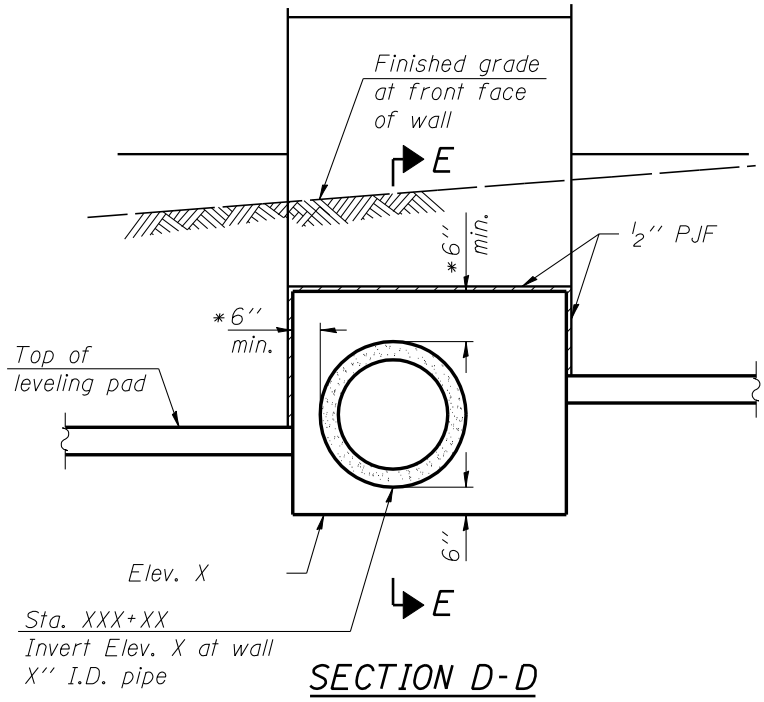

SECTION D-D

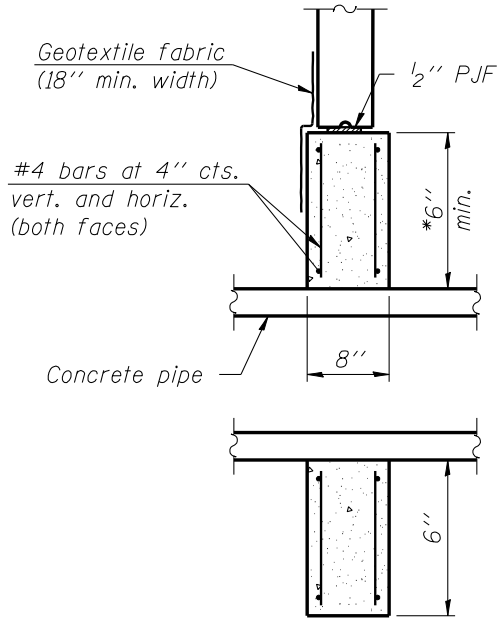

SECTION E-E

* Wall supplier to determine required dimensions.

CAST IN PLACE PANEL
FOR PIPE PASS THROUGH

Figure 3.11.1.2-2

3.11.1.3 Anchorage Slab and Section Thru Parapet

Figure 3.11.1.3-1 presents details for a section through parapet with an anchorage slab for cast-in-place facing. Figure 3.11.1.3-2 gives similar details, but with precast facing. A note specifying a bearing pressure surcharge of 1 ksf and horizontal sliding force of ½ kip/ft. of wall from the anchorage slab shall be provided on the plans as shown in Figures 3.11.1.3-1 and 3.11.1.3-2. The MSE wall supplier's internal stability design shall account for these forces. The anchorage slab/parapet/MSE wall system shall also be designed by the engineer responsible for the Contract plans to resist a traffic impact loading on the parapet for a specified crash test level (TL). See Section 2.3.6.1.7 for more information on railings and TL requirements.

When transverse joints are required in anchorage slabs, they shall be aligned with joints in parapets and, if possible, adjacent pavement joints.

Joints in parapets shall follow the details shown in Fig. 3.2.4-10, except that the bottom portion of the parapet shall also be preformed cork joint filler with a detail consistent with that of the top portion of the parapet.

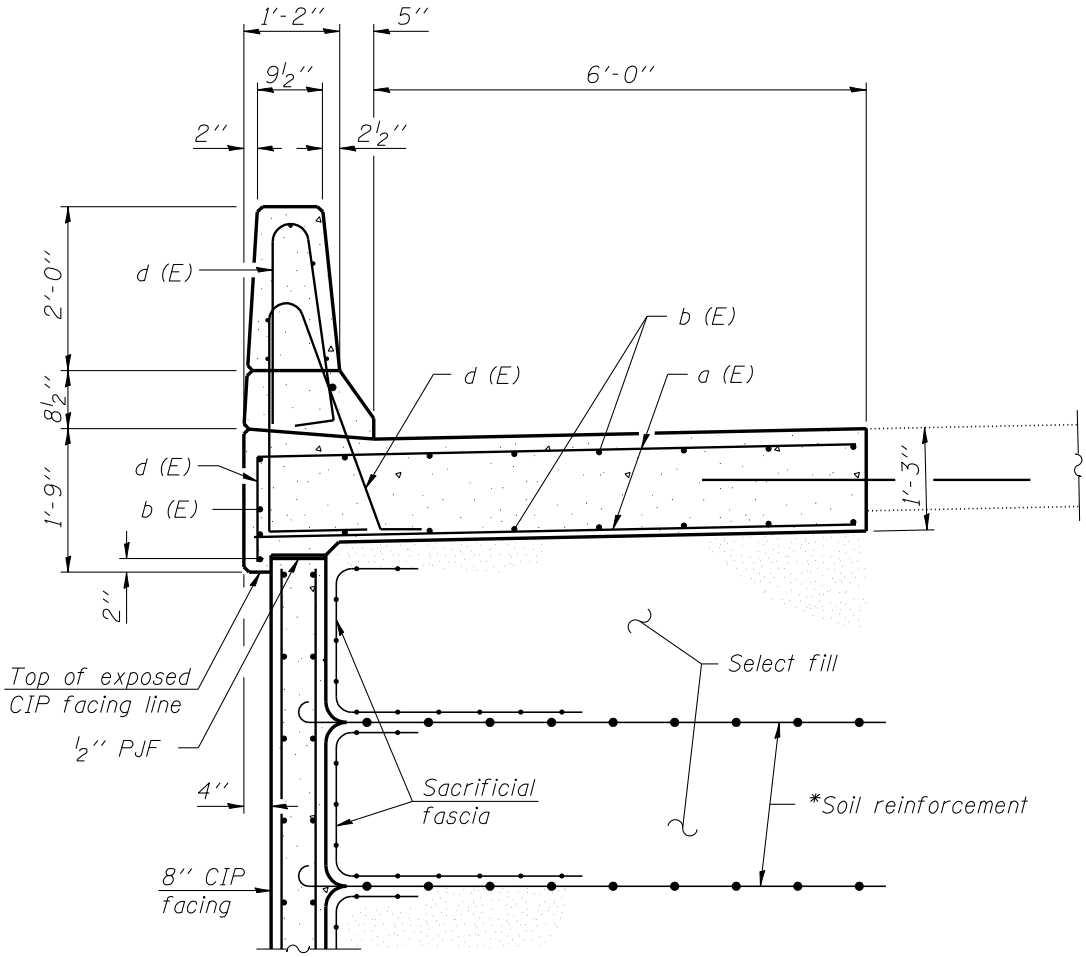

* The MSE wall supplier's internal stability design shall account for the anchorage slab's bearing pressure surcharge of 1.0 ksf and horizontal sliding force of 0.5 kips/ft. of wall.

SECTION THRU CIP BARRIER AND ANCHORAGE SLAB ON CIP FACING

Figure 3.11.1.3-1

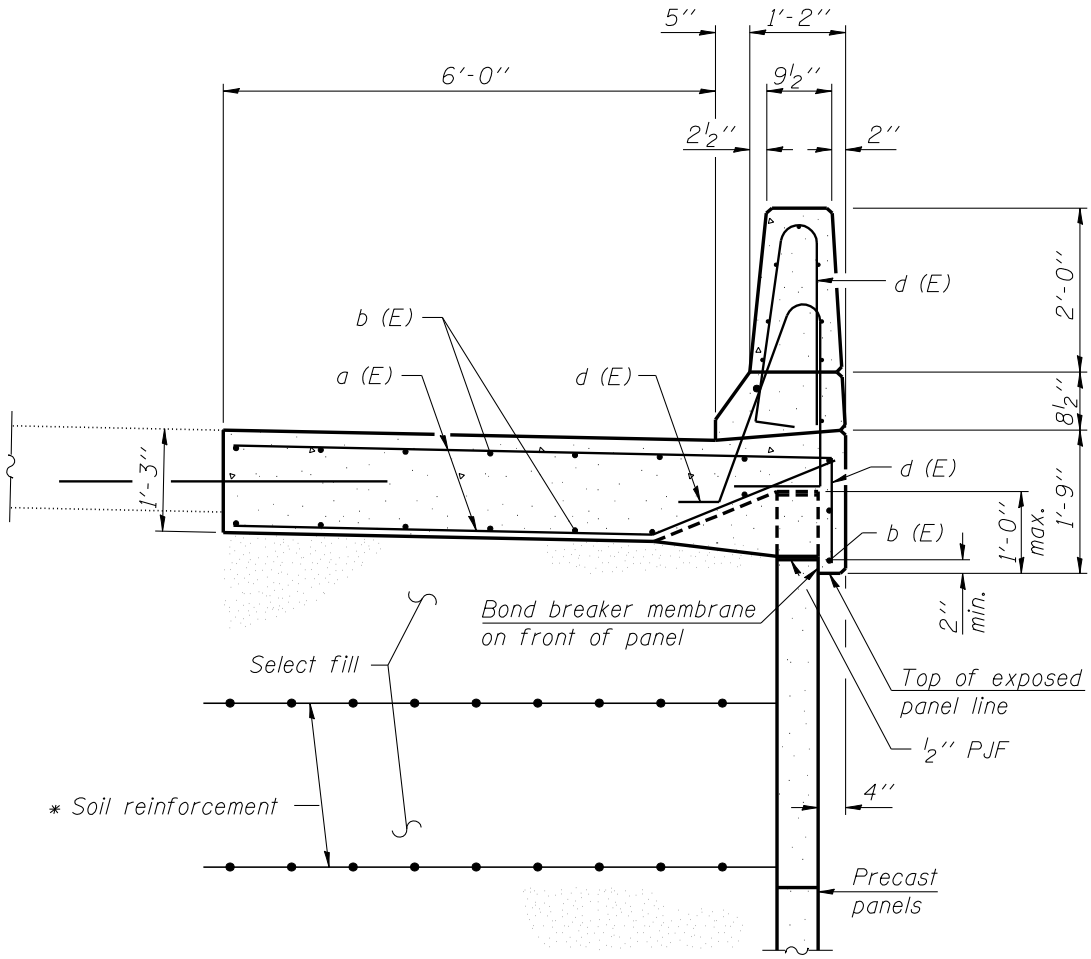

* The M.S.E. wall supplier's internal stability design shall account for the anchorage slab's bearing pressure surcharge of 1.0 ksf and horizontal sliding force of 0.5 kips/ft. of wall.

SECTION THRU CIP BARRIER AND ANCHORAGE SLAB ON PRECAST PANELS

Figure 3.11.1.3-2

3.11.1.4 Abutments

When abutments are placed on MSE walls, they are usually supported by piles, but spread footings and drilled shafts can also be employed. Figure 3.11.1.4-1 illustrates standard details for a section through a pile supported stub abutment. Figure 3.11.1.4-2 presents standard details for a pile supported stub abutment with wrap-around MSE wingwalls. Details for an abutment on a spread footing with wrap-around MSE wingwalls are given in Figure 3.11.1.4-3.

Stub-type pile supported abutments require soil reinforcement to be attached to the backface. See Figures 3.11.1.4-1 and 3.11.1.4-2. This is because the MSE wall prevents the use of battered piles to resist lateral loadings. As such, the Contract plans shall include a note which indicates the maximum horizontal service force applied to the abutment so the MSE wall supplier can account for it during design (see Figure 3.11.1.4-2).

For abutments on spread footings, the designer shall size the footing such that the service surcharge load from the abutment is no more than 4 ksf. The Contract plans shall also include a note which indicates the maximum horizontal service sliding force along with the vertical surcharge load so the MSE wall supplier can account for it during design (See Figure 3.11.1.4-3).

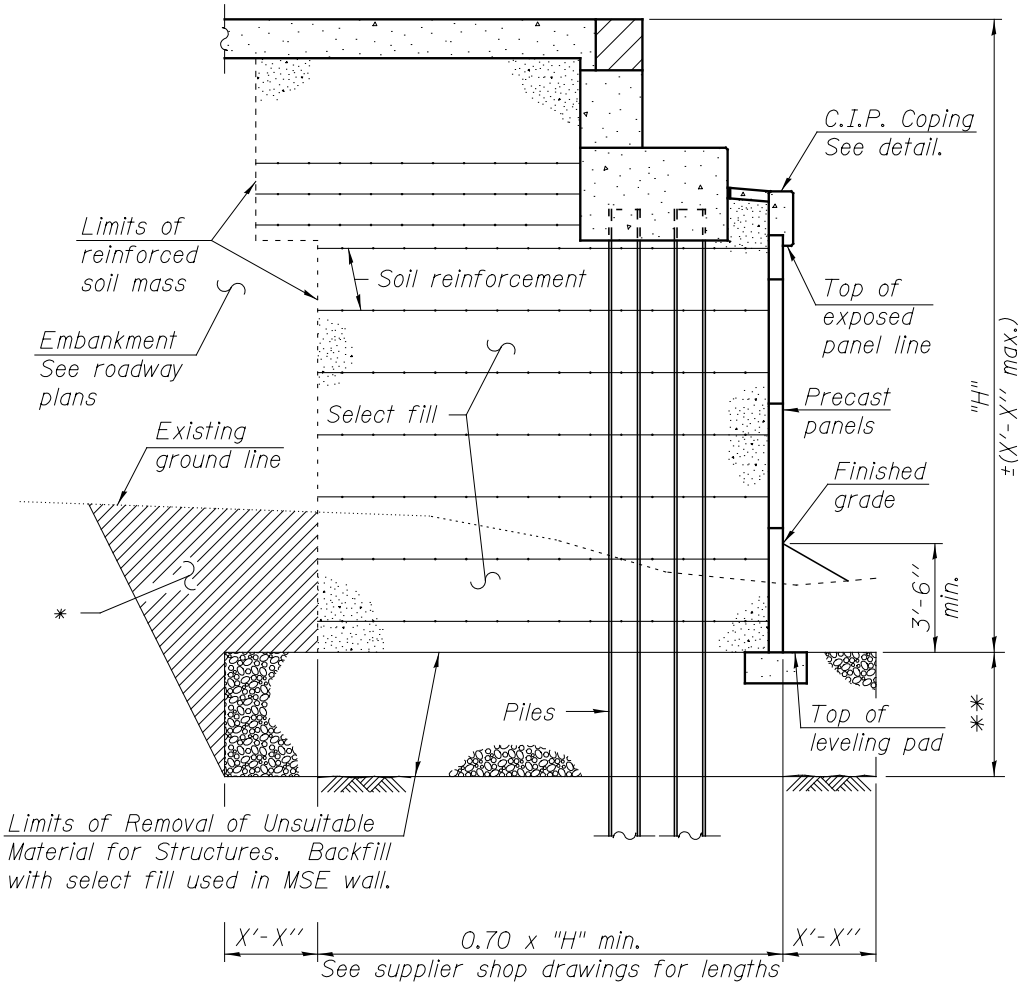

* Overexcavation beyond structure excavation and removal of unsuitable material. This area not measured for payment. Backfill overexcavation with same material used for select fill used in MSE wall.

** If required by structure geotechnical report.

TYPICAL M.S.E. WALL
SECTION AT ABUTMENT

Figure 3.11.1.4-1

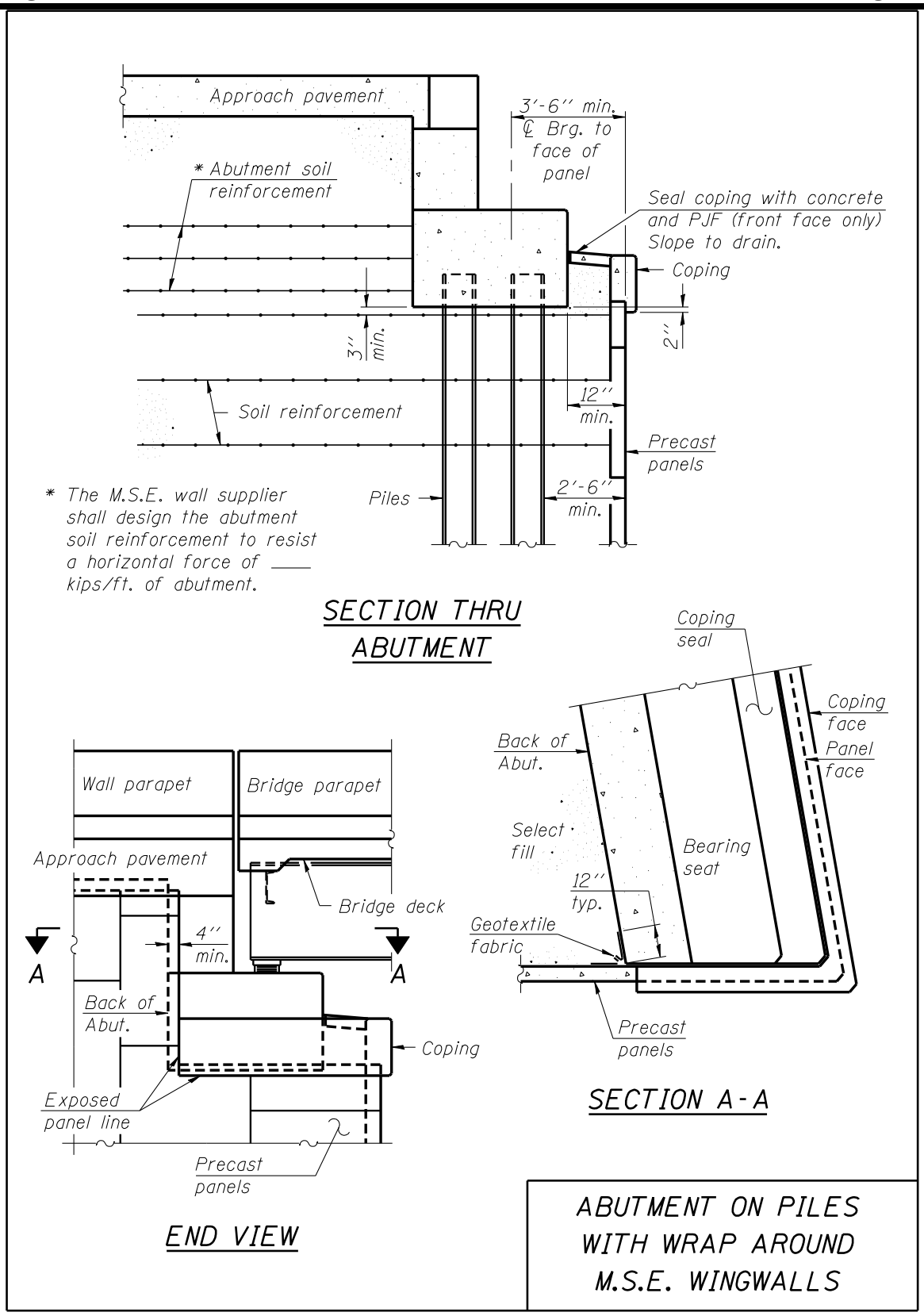

Figure 3.11.1.4-2

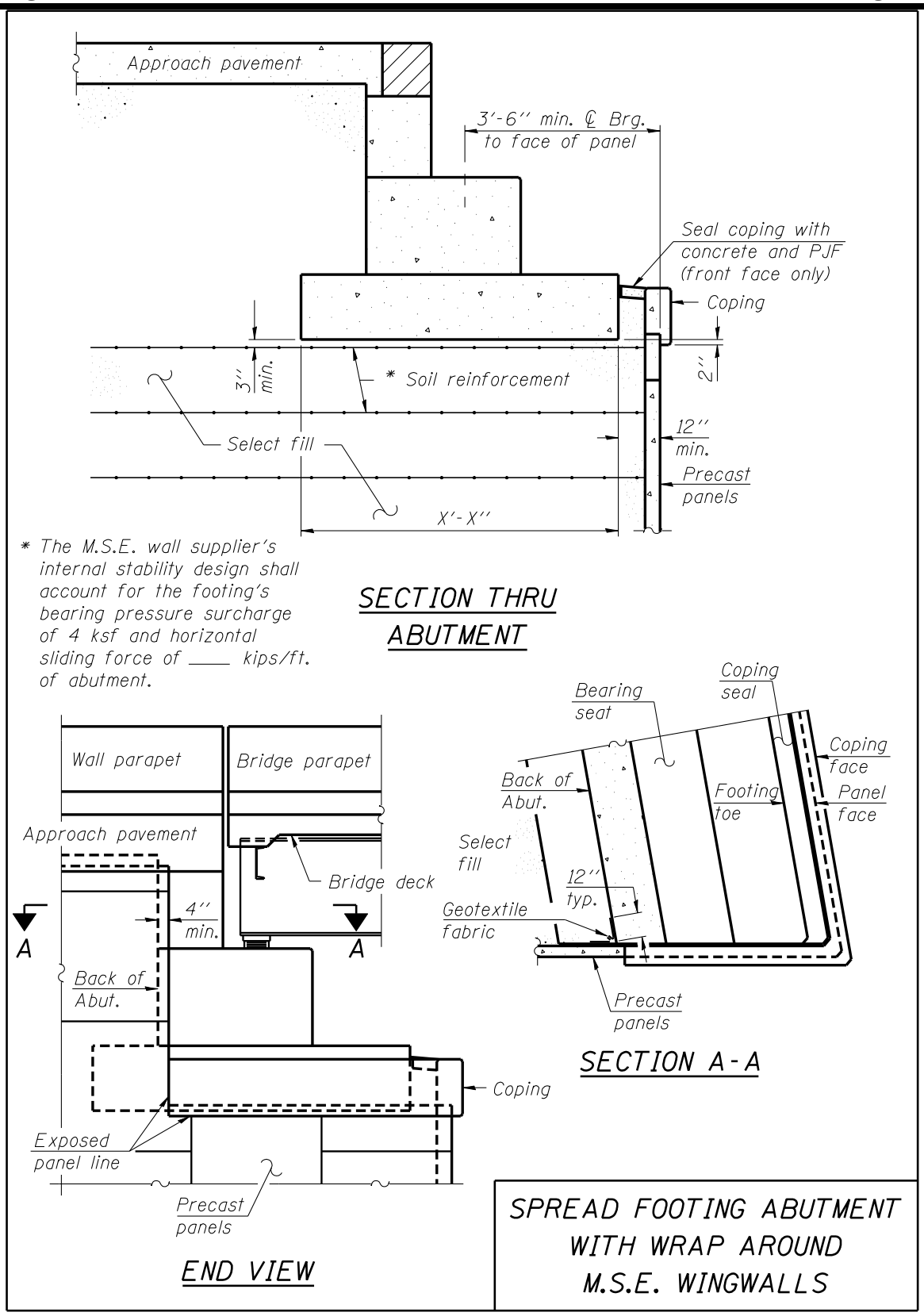

Figure 3.11.1.4-3

3.11.2 Cast-In-Place T-Type

This wall is considered to have a 75 year design life. Figure 3.11.2-1 illustrates expansion and construction joint details for cast-in-place T-type walls.

T-type retaining walls can be supported by spread footings, piles, or drilled shafts. See Section 3.10 for additional guidance.

The SGR contains evaluations and recommendations for specific situations such as: bearing resistance, sliding, settlement, stability, pile design requirements, etc. The geotechnical engineer responsible for the SGR should be consulted by the wall designer when assistance is needed.

3.11.2.1 Geometry

The minimum stem thickness at the top of a T-type wall shall be 10 in. for concrete placement purposes. The minimum stem thickness of a T-type wall with a parapet mounted at any height of the wall shall be the thickness of the base of the parapet.

Stem thickness shall be shown in 0.5 inch increments.

No batter in the stem is provided when the stem thickness is equal to or less than 12 inches. When stem batter is required, the front (exposed) face should only be battered up to 0.5 inches per foot (H:V). Any further required batter should be provided on the back (in contact with earth) face of the stem.

For pile-supported footings, the minimum footing thickness shall be 1 ft. – 9 in. For pile-supported footings in seismic zones, piles shall either be embedded 24 inches into the footing or a positive connection between the piles and concrete as per Figure 3.15.5-5-1 shall be used.

Figure 3.11.2.1-1 shows minimum dimensions and reinforcement layout for a T-type wall on spread footings. Figure 3.11.2.1-2 shows minimum dimensions and reinforcement layout for a T-type wall on piles.

3.11.2.2 Loads

The soils behind T-type walls may be assumed to have an angle of internal friction of 28 degrees. Most T-type walls founded on pile-supported footings or spread footings on soil will deflect enough to assume active soil conditions. However, walls founded on rock or with heavily battered piles may not deflect enough to warrant this assumption and should be designed assuming at-rest soil conditions.

IDOT T-type walls with porous granular backfill and pipe underdrains may be assumed to be fully drained. IDOT T-type walls with weepholes may be assumed to drained at all levels above the level of the weepholes.

Crash loading on parapets may be assumed to be spread over a 1:1 slope to the base of the wall. Note that this loading cannot be distributed over an expansion joint.

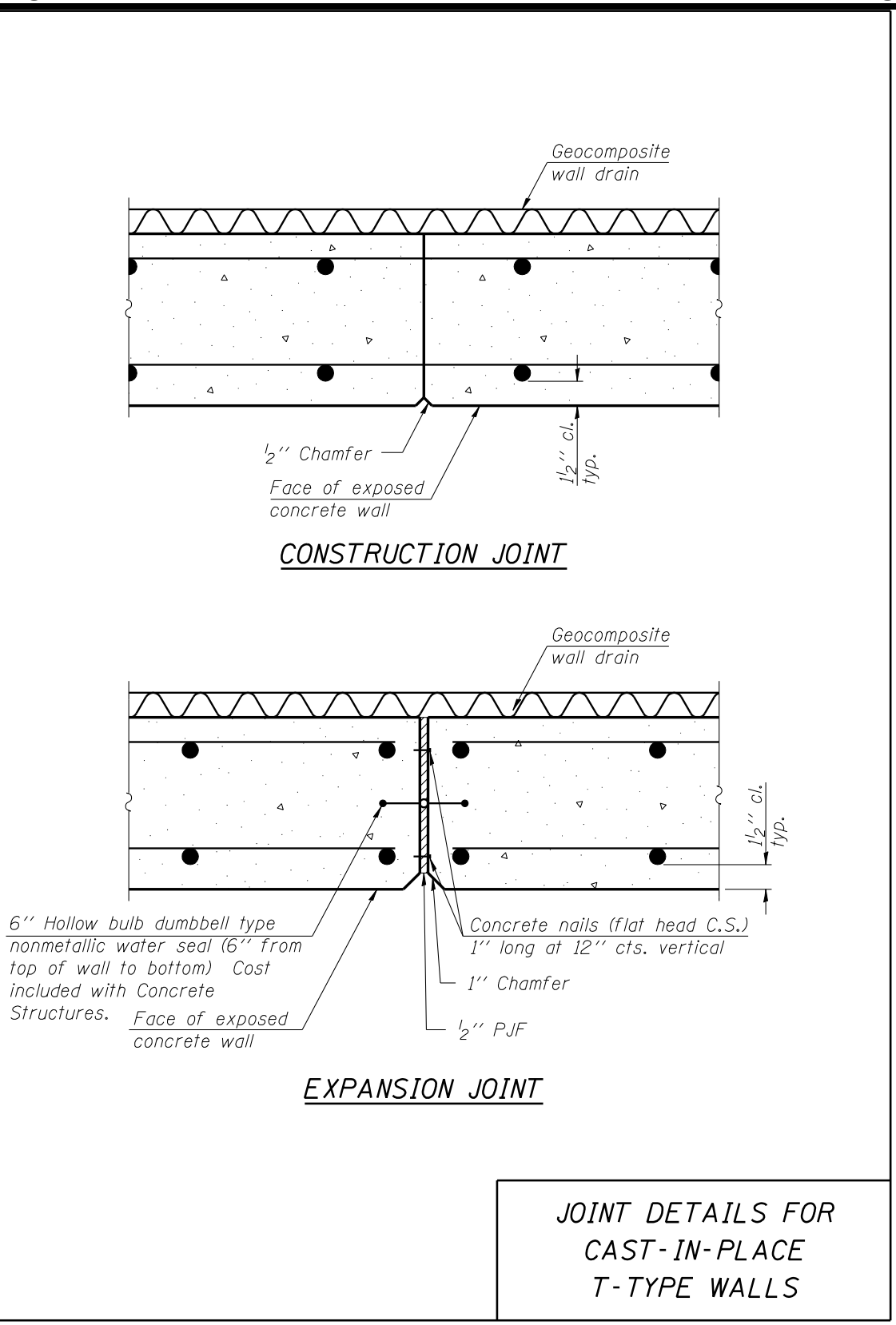

Figure 3.11.2-1

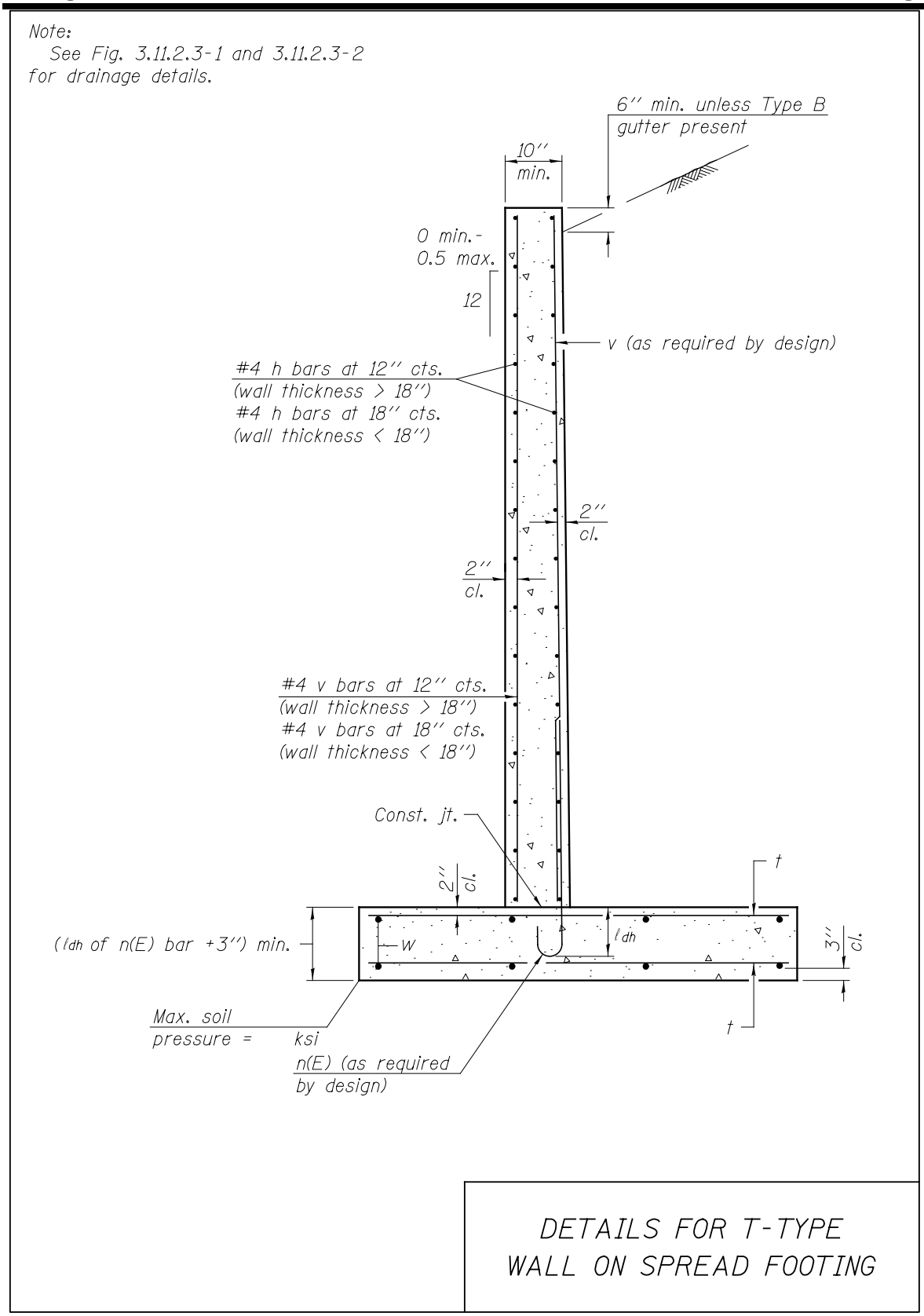

Figure 3.11.2.1-1

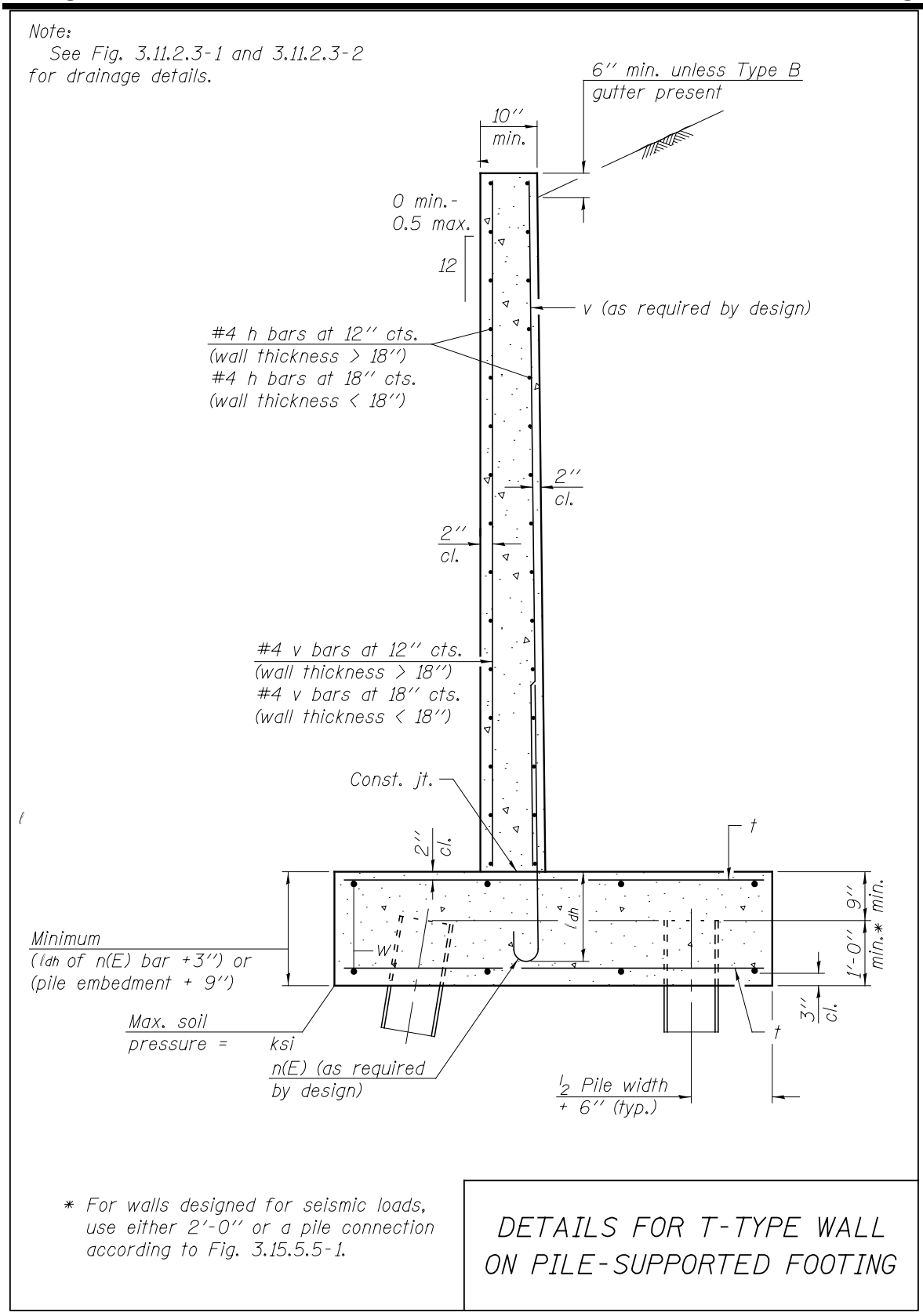

Figure 3.11.2.1-2

3.11.2.3 Drainage and Backfill Details

Drainage and backfill details for T-type retaining walls are presented in Figures 3.11.2.3-1 and 3.11.2.3-2.

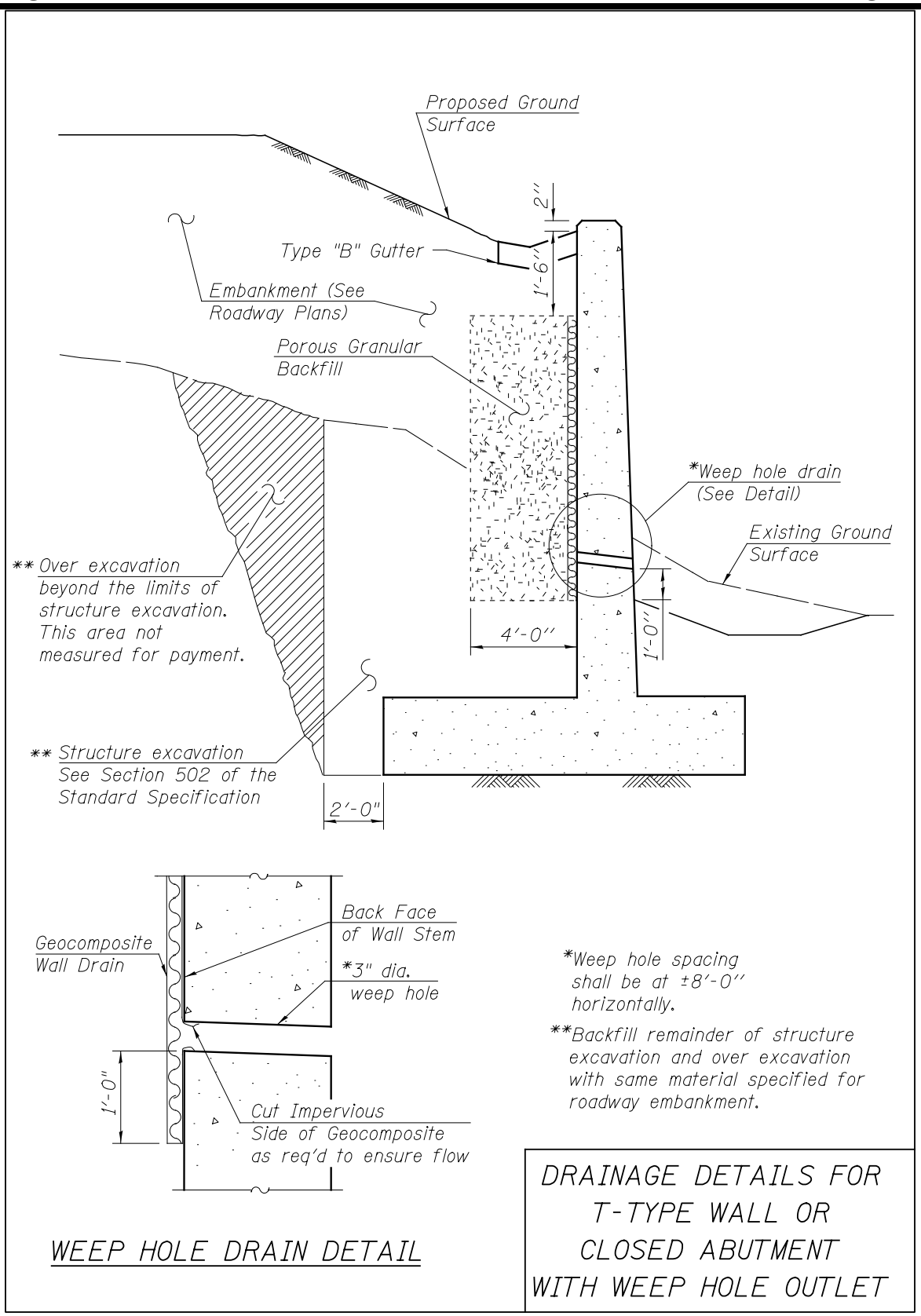

Figure 3.11.2.3-1

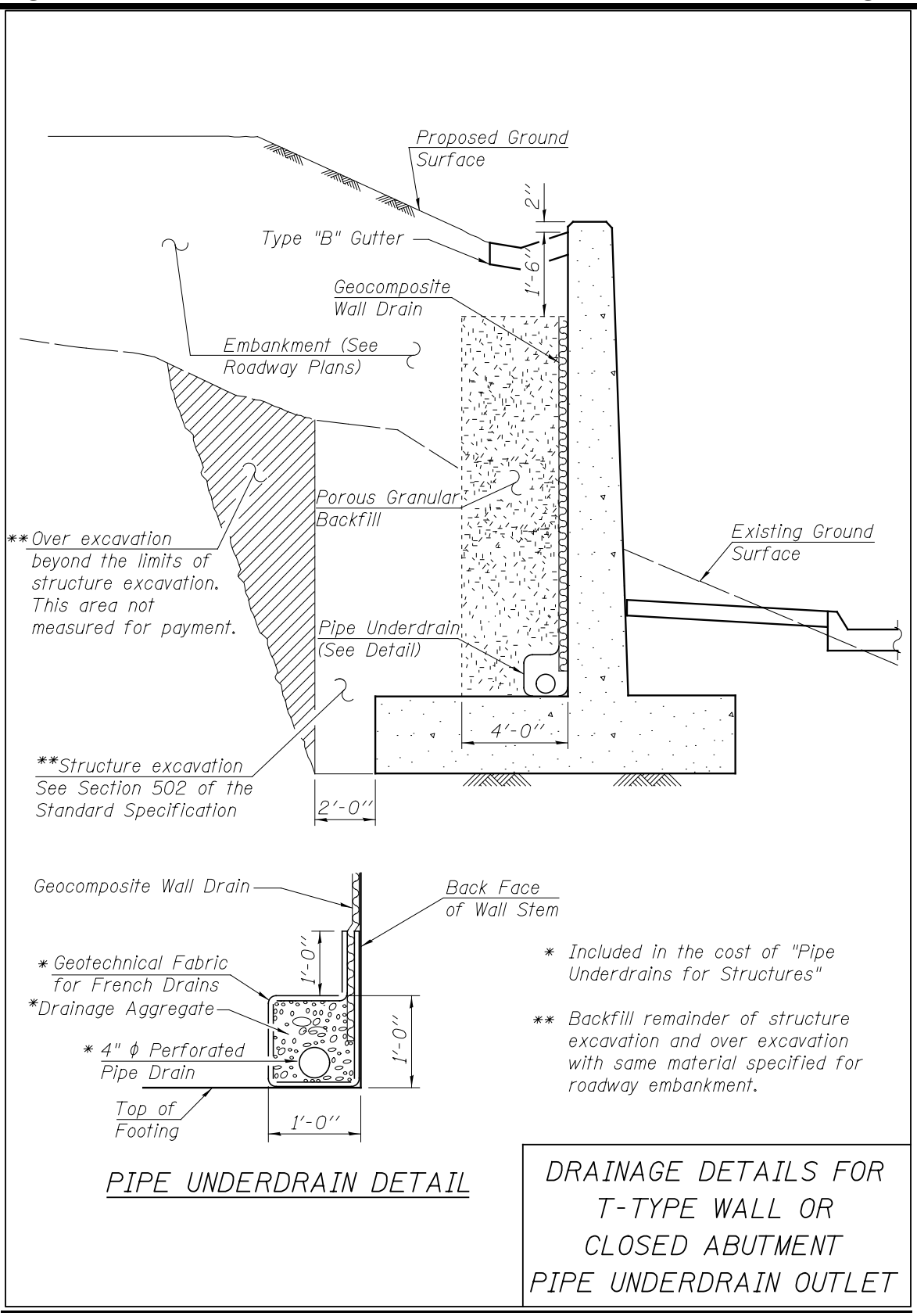

Figure 3.11.2.3-2

3.11.3 Soldier Pile

Soldier pile walls are well suited for “cut wall” situations. Piles are installed in existing ground and, as soil is cut away in front of the wall, lagging between the piles is successively installed lower and lower until the final cut elevation is achieved. This method of construction allows for continuous undisturbed support of the ground and infrastructure immediately behind the wall. Soldier pile walls are also used in “fill” applications but this is not as common as for cut situations.

3.11.3.1 Driven or Drilled

Piles for soldier pile walls can either be driven to required tip elevations or placed in drilled holes and encased in concrete (“drilled piles”). Encasement normally uses full strength concrete from the pile tip to the bottom of the facing and controlled low strength material (CLSM) to the existing ground surface. Driven piles are limited to H sections while drilled piles can be larger W shapes, built-up plate sections or multiple W sections for longer cantilevered heights or to accommodate permanent ground anchor connections. Drilled piles can also provide larger soil bearing areas which allow greater spacings between piles, shorter embedment lengths, and possibly smaller sections. Drilled piles may also provide better corrosion protection. When the lagging and soldier piles are exposed permanently, the vertical plumb of the piles becomes more critical and can be better controlled when drilled as opposed to driven.

The drilled hole diameter for a soldier pile is determined by calculating the diagonal distance across the pile, adding 2 in. of clearance on each side and rounding up to the nearest standard auger size (18”, 24”, 30”, etc.).

The design of soldier pile walls shall follow the AASHTO LRFD Specifications. The surface of a soldier pile is assumed to bear laterally on a width of soil 3 times its drilled diameter or 3 times its flange width when driven. This distance, however, shall not be greater than the center-to-center distance between piles. Coulomb’s earth pressure coefficients should be used with the wall friction on the lagging assumed to be zero. For the portions of soldier piles below the wall facing, Coulomb’s earth pressure coefficients should be used. The first 3 ft. of passive pressure is normally neglected due to soil disturbance caused by installation of drainage measures and/or fascia, possible future changes in grade or utilities installation, and potential loss of soil strength due to freeze-thaw cycles.

Soldier piles are typically spaced at 8 ft. centers. However, spacings up to 14 ft. can be employed in wall portions with short retained heights. For special applications, e.g. where bending or deflection requirements are significant, drilled piles can be immediately adjacent to one another in order to maximize section modulus per ft. of wall.

Soldier piles shall be sized to address strength and deflection requirements of the site, assuming a $\frac{1}{32}$ in. corrosion loss over the entire surface area for a 50 yr. design life. Deflection often controls the pile size in walls with taller exposed heights, soft foundation soils, or walls retaining settlement-sensitive structures. See the SGR for detailed geotechnical evaluations and information as well as the IDOT Geotechnical Manual for further guidance.

3.11.3.2 Facing Alternatives

Facing alternatives for soldier pile walls include cast-in-place and precast concrete, and treated timber. The lagging is designed as a simple span between soldier piles for the earth pressure loading. The following subsections present some design details and discussions for the three primary facings used by the Department.

3.11.3.2.1 CIP Facing

Figures 3.11.3.2.1-1 and 3.11.3.2.1-2 present cast-in-place fascia soldier pile wall details for driven and drilled piles respectively. CIP facing requires temporary untreated timber lagging be placed with ¾ in. gaps between adjacent timbers to allow for ground water to enter the geocomposite wall drain attached to the lagging's outside face. Since the timber lagging is considered temporary, it is not required to support the full design earth pressure. It is the contractor's responsibility to size the timber lagging and, as such, the note below shall be included on the Final plans.

> *The Contractor is responsible for the design and performance of the lagging using no less than a 3 in. nominal rough-sawn thickness and timber with a minimum allowable bending stress of 1000 psi.*

The note is intended to require the contractor to evaluate the cut conditions and design the lagging to perform without excessive deflection or cracking. The use of CIP facing allows some variation in rear face alignment due to out of alignment soldier piles, pile deflections and lagging deflections.

The CIP facing design normally utilizes a 12 in. thick section. The reinforcement shall be designed for strength and serviceability. CIP concrete facing is connected to the soldier piles via ¾ in. welded studs. The length and spacing of the studs are determined by the geometry of the wall, and vertical and horizontal loadings. Typical plan sections of soldier pile walls with cast-in-place facing, which includes details for the welded studs, are presented in Figures 3.11.3.2.1-3 (showing single soldier piles) and 3.11.3.2.1-4 (showing immediately adjacent soldier piles to which tie backs can be attached). Figure 3.11.3.2.1-5 illustrates expansion and construction joint details for CIP facing. These joints should be placed at locations clear of soldier pile flanges. Clear cover shall be taken as the minimum dimension from the closest reinforcement to either (a) the geocomposite wall drain, or (b) the outside of the flange of the soldier pile. Since geocomposite wall drain thickness is unknown during design, it may be desirable to increase the clear cover in order to avoid inadequate cover should the Contractor choose a thicker geocomposite wall drain than that shown in design.

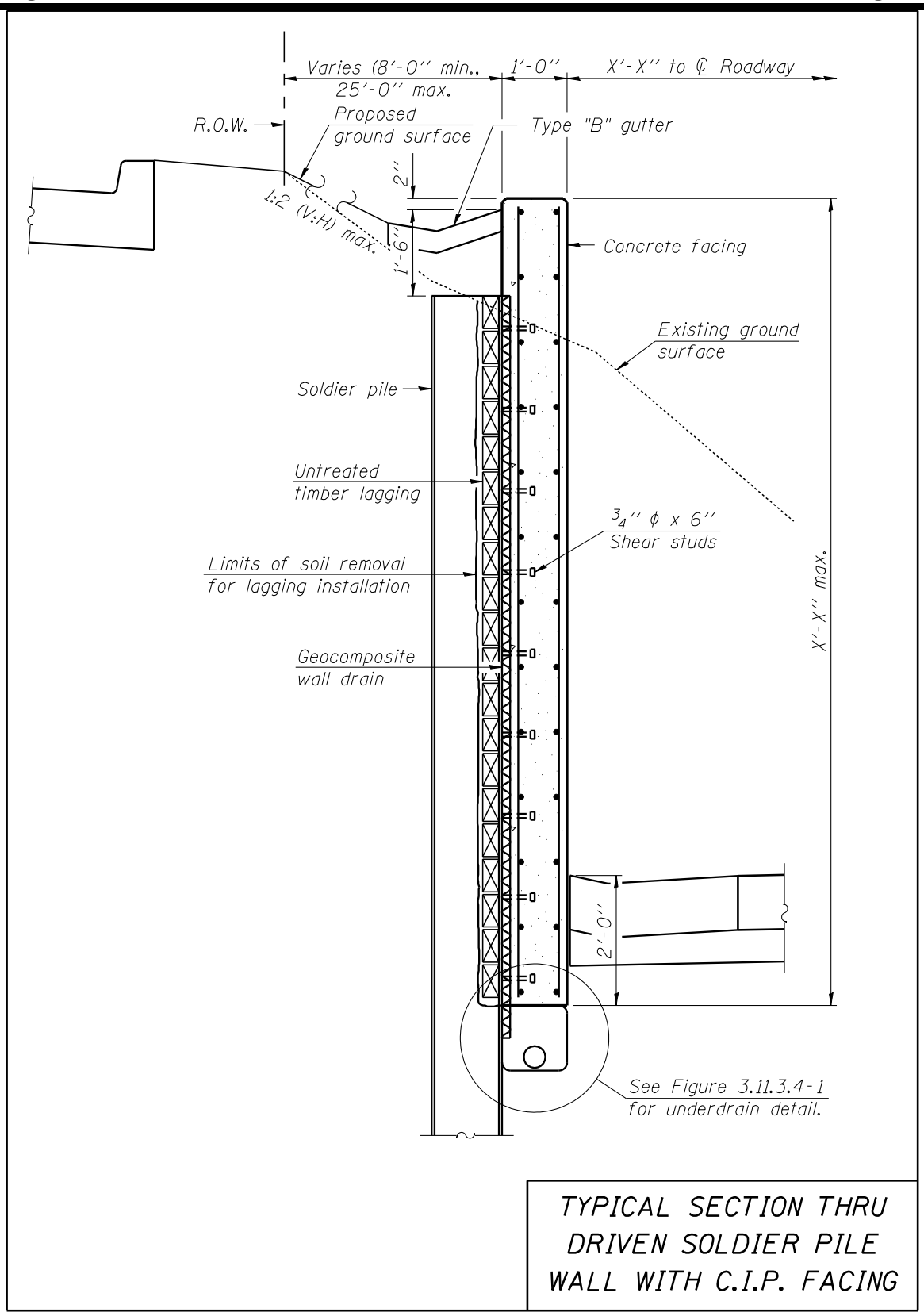

Figure 3.11.3.2.1-1

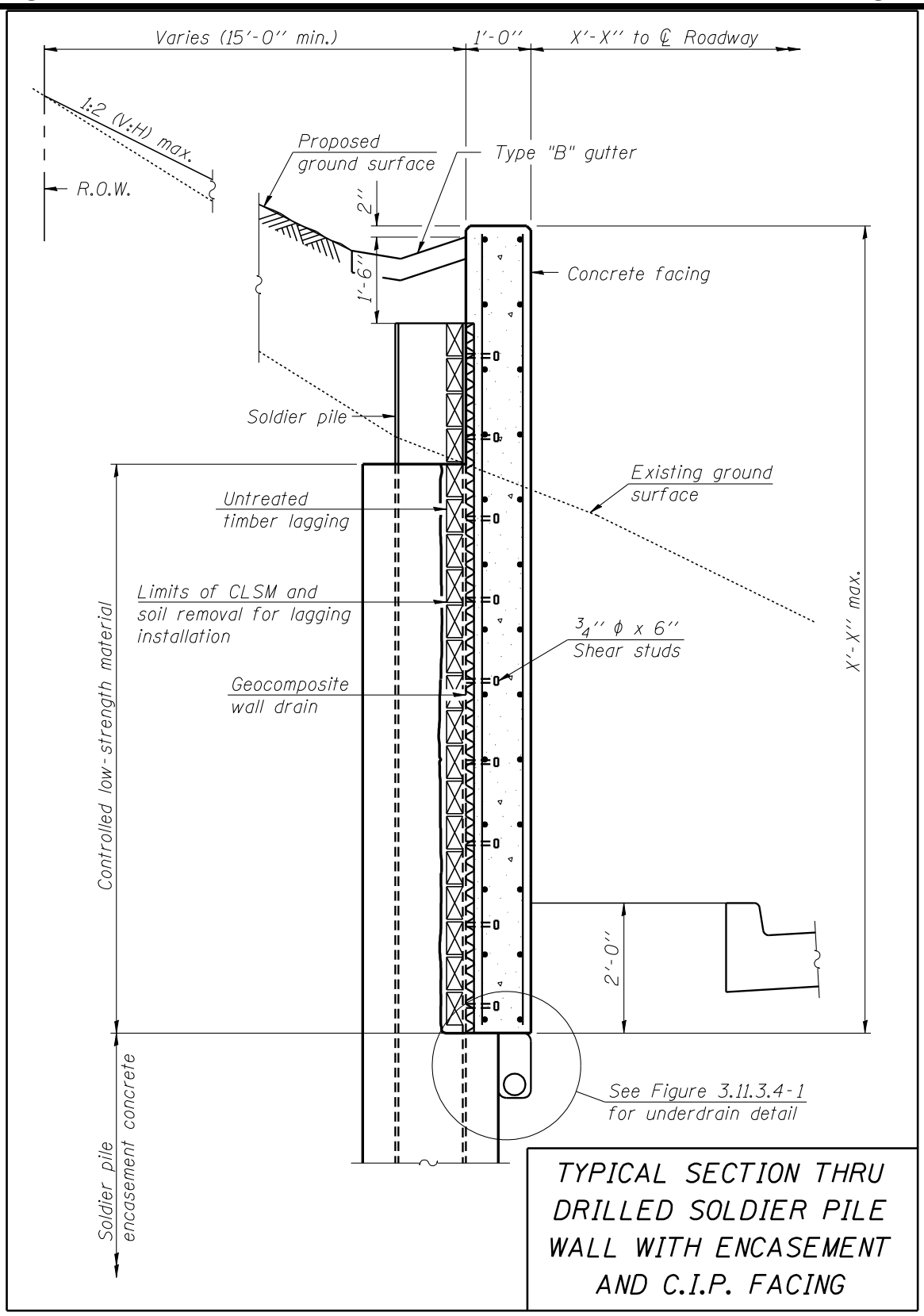

Figure 3.11.3.2.1-2

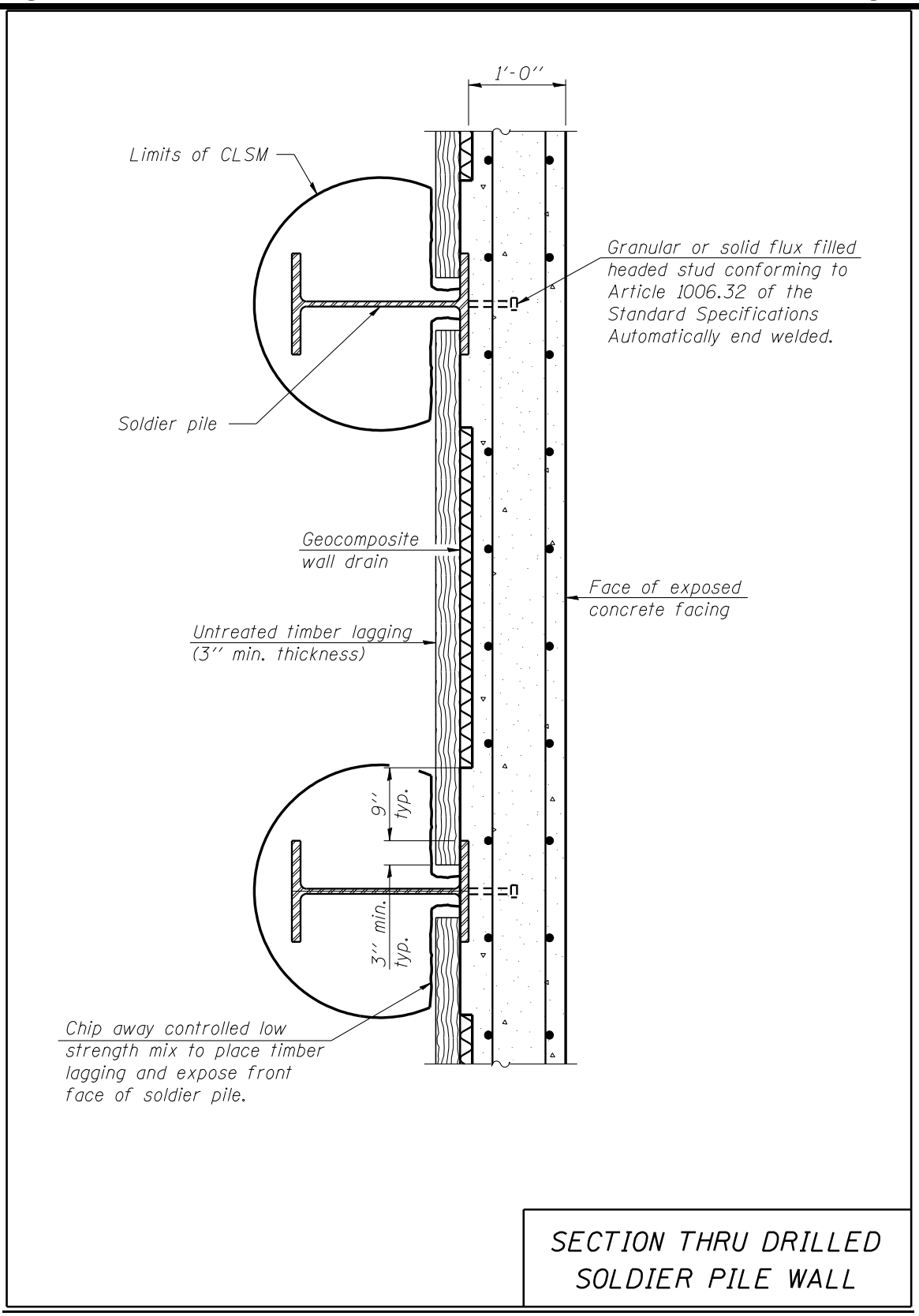

Figure 3.11.3.2.1-3

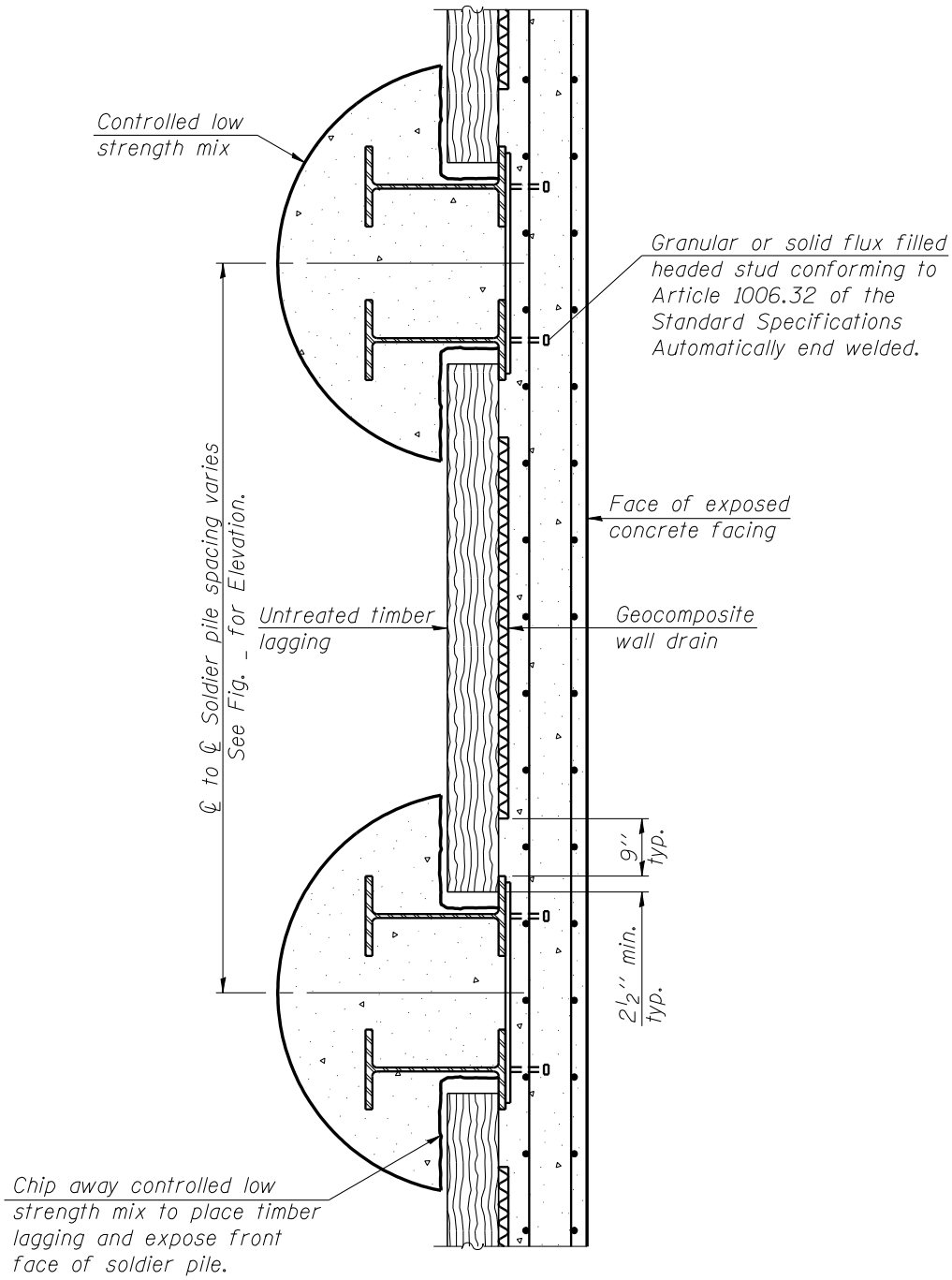

SECTION THRU DRILLED SOLDIER PILE WALL WITH TIE BACKS

Figure 3.11.3.2.1-4

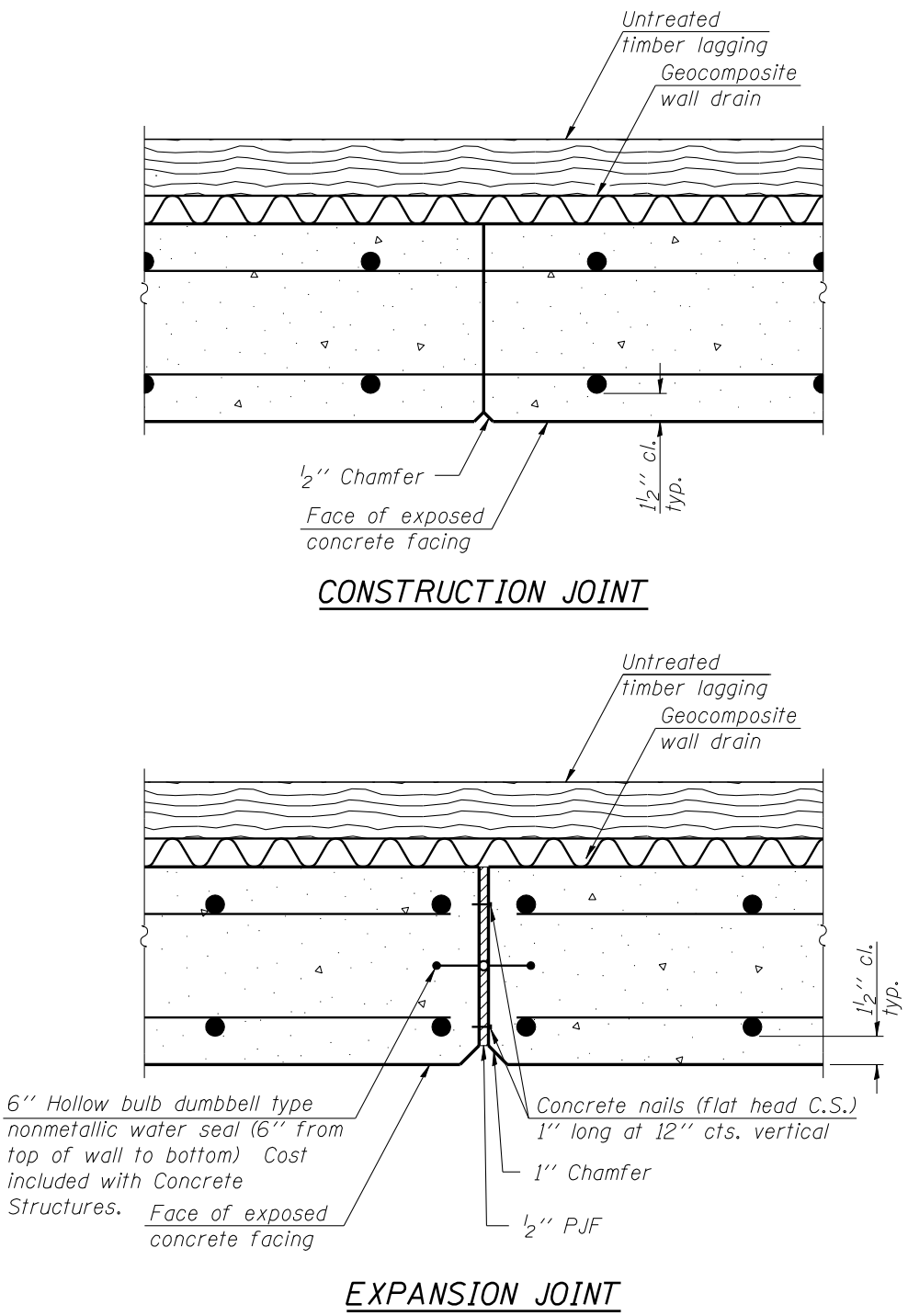

Figure 3.11.3.2.1-5

3.11.3.2.2 Treated Timber

Exposed treated timber is normally used at locations in which the face is not typically viewed by the public or in bucolic settings. As is implied by the name, the timbers span between soldier piles and remain exposed. A CIP concrete cap or steel channel section is typically provided for treated timber soldier pile walls to cover the top of the lagging as well as the tops of the piles as shown in Figure 3.11.3.2.2-1 (which also notes that precast lagging may be utilized).

The plans shall note that the lagging is required to conform to Articles 507 and 1007.03 of the Standard Specifications. The timber shall be dense Southern Pine or dense Douglas Fir of the strength and dimensions specified. Minimum bending strength (F_b) of the timber shall be shown on the plans and is normally specified at or above 1600 psi. Considering the lagging span, soil arching and other timber design factors, the required lagging thickness can be determined and specified.

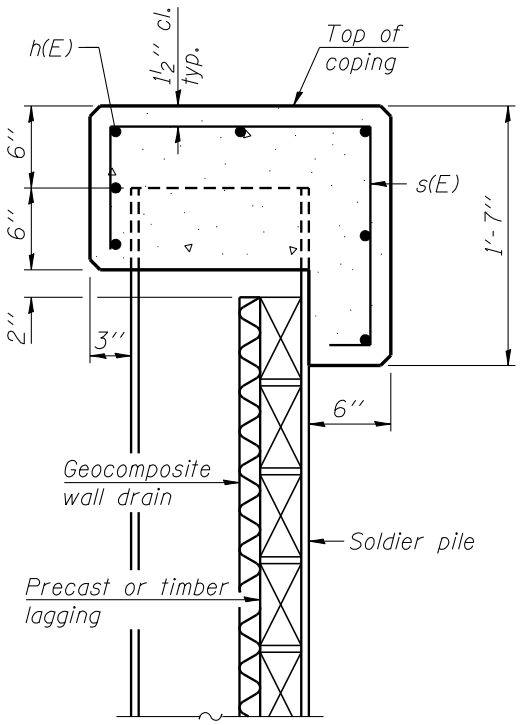

CONCRETE CAP SECTION
FOR SOLDIER PILE WALL
WITH EXPOSED LAGGING

Figure 3.11.3.2.2-1

The following notes should be added to the Contract plans when exposed treated timber is used for a soldier pile wall.

> *The treated timber lagging shall be structural square cut dense Southern Pine or dense Douglas Fir.*
>
> *The drain shall be placed behind the lagging with the pervious side toward the soil according to Section 591 of the Standard Specifications and shall extend to within 6 in. of either side soldier pile flange. The drain shall be installed in stages as the excavation proceeds downward making sure that drain splices as well as the top side edges are covered as required to protect the drain core from soil intrusion.*

3.11.3.2.3 Precast Facing

Precast lagging and precast panels are used occasionally on Departmental projects. However, the expense of casting, shipping, handling and installation can be excessive for most locations in Illinois.

3.11.3.3 Anchorage Slab, Section Thru Parapet and Railing

Figure 3.11.3.3-1 presents a typical wall section for a soldier pile wall with CIP facing and an "independent" barrier or parapet with an anchorage slab. Figure 3.11.3.3-2 gives the details of the anchorage slab and parapet along with the interface between the wall and the anchorage slab.

Figure 3.11.3.3-3 presents a typical wall section for a soldier pile wall with CIP facing and a "dependent" barrier or parapet. Note the absence of an anchorage slab in the figure. A typical wall section for a soldier pile wall with CIP facing and an attached rail is given in Figure 3.11.3.3-4.

See Section 3.11.1.3 for other related design criteria which includes traffic impact. Note that the "crash worthiness" of the details shown in Figures 3.11.3.3-3 and 3.11.3.3-4 may be inadequate for many situations without modification.

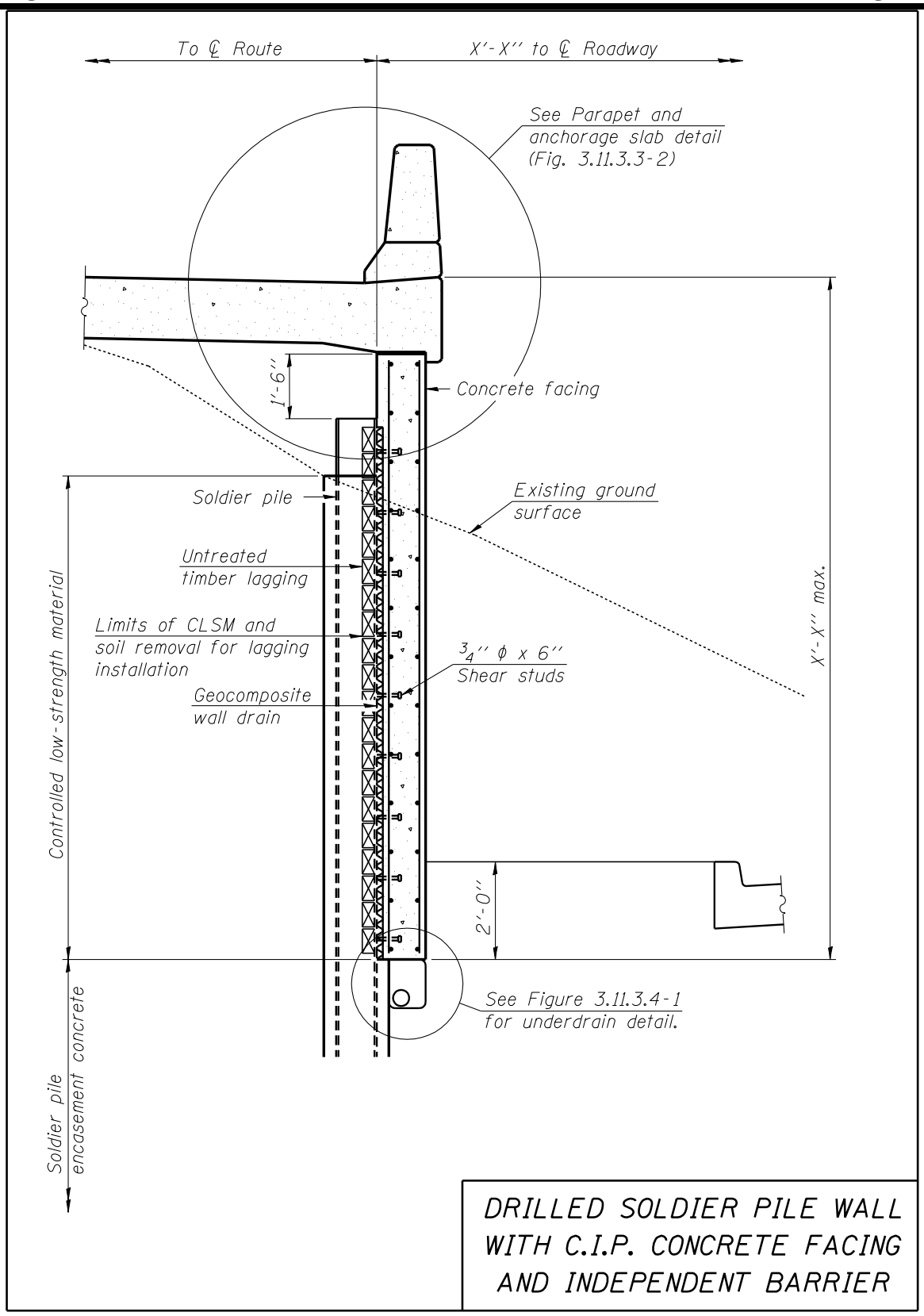

Figure 3.11.3.3-1

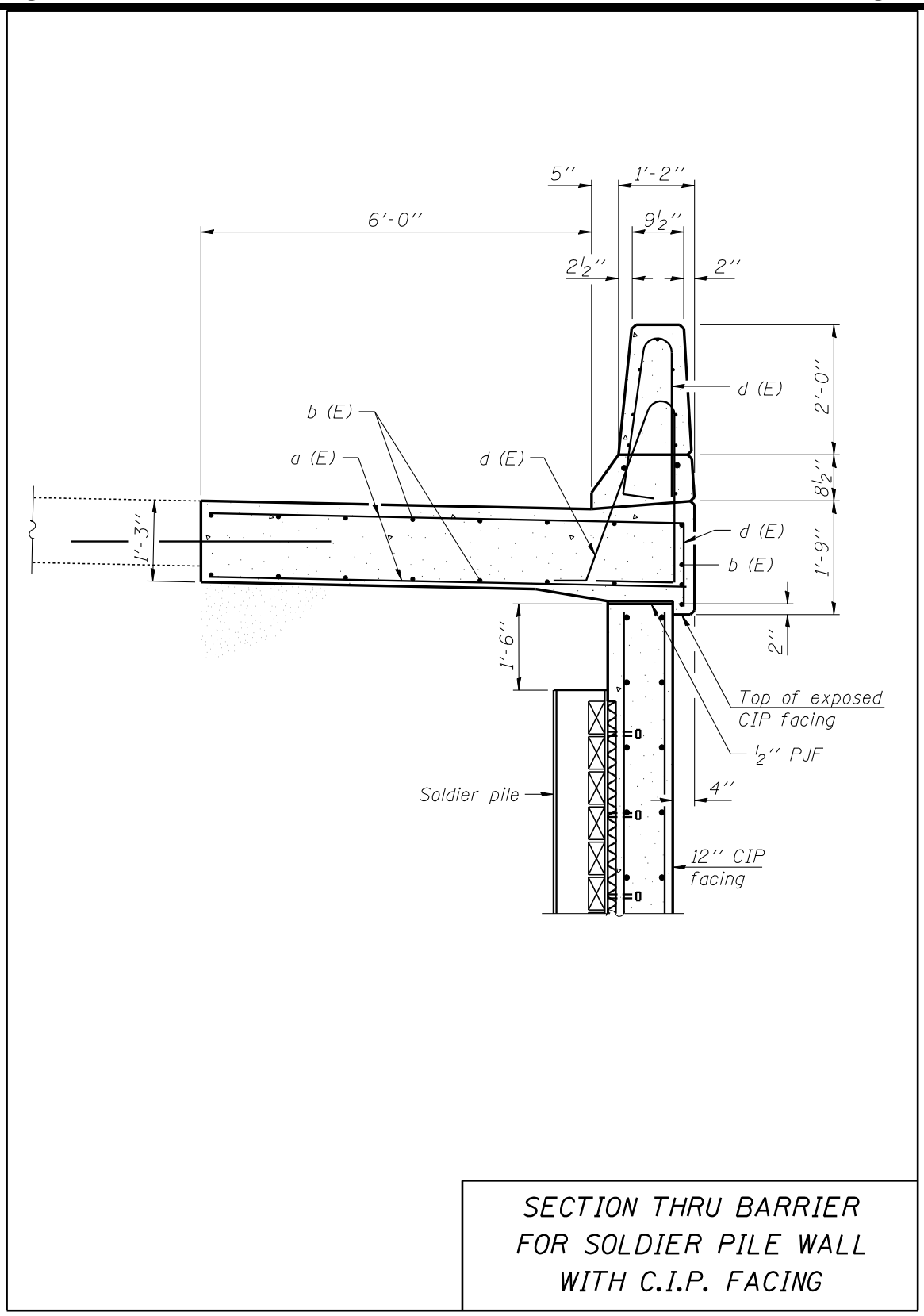

Figure 3.11.3.3-2

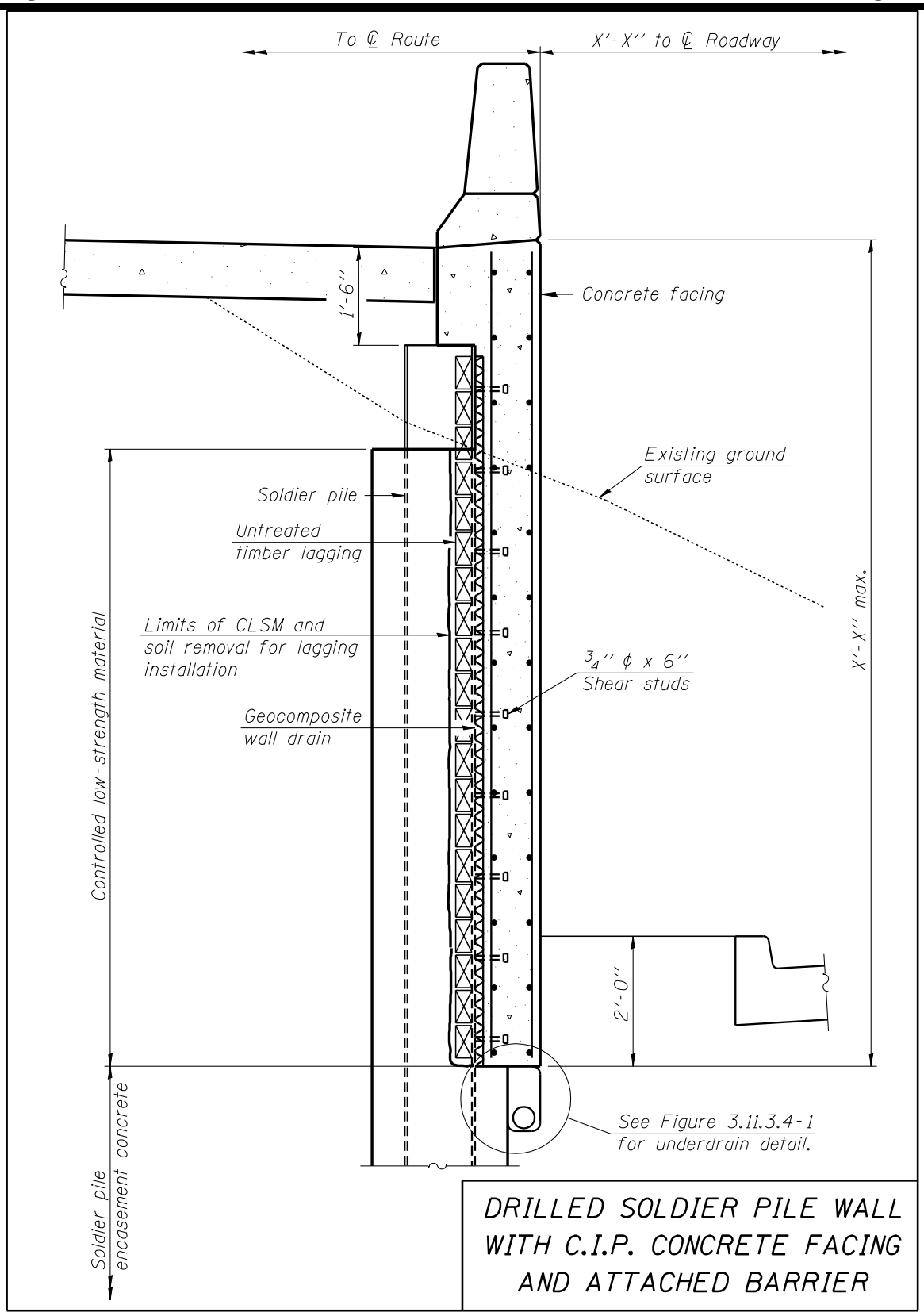

Figure 3.11.3.3-3

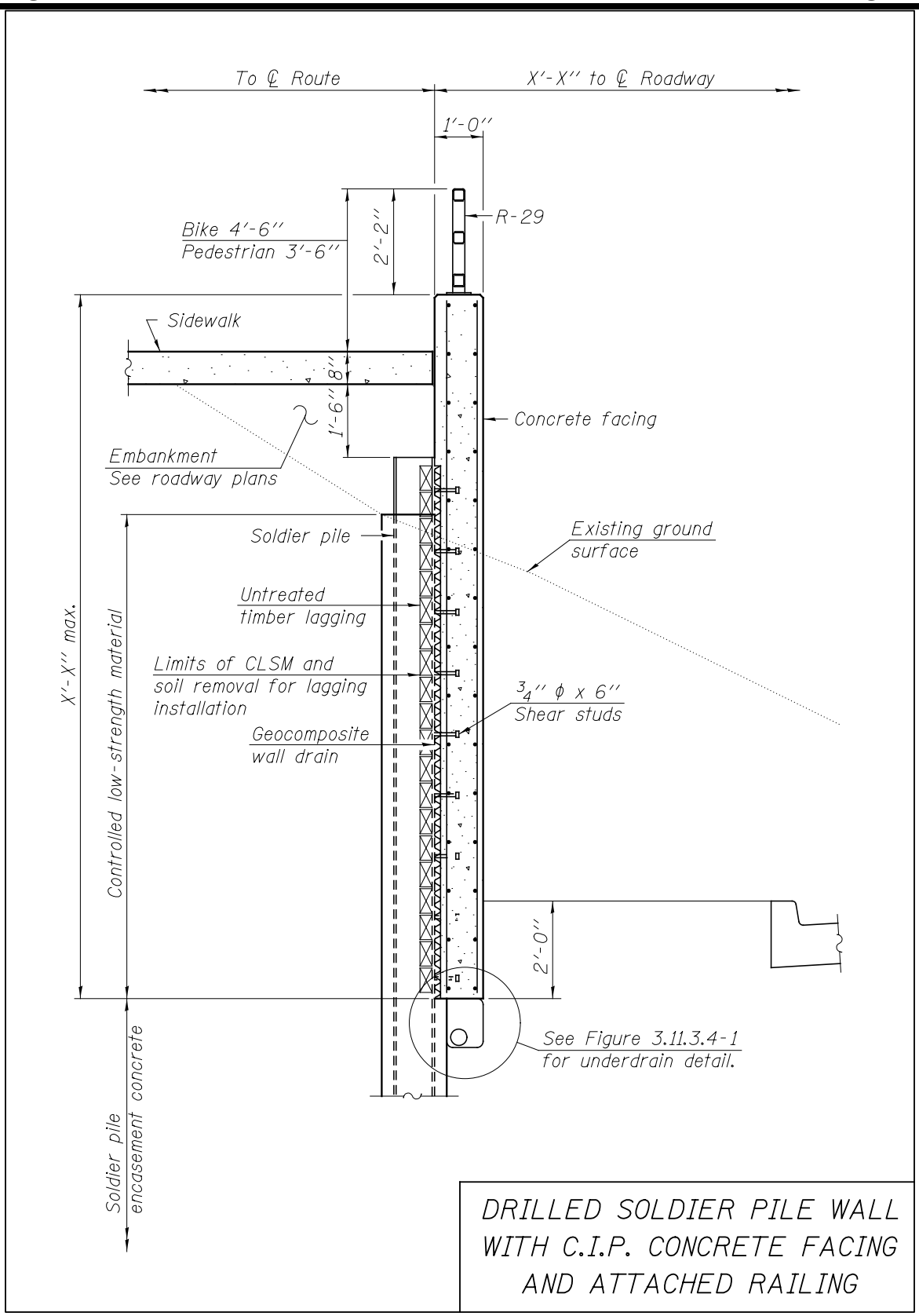

Figure 3.11.3.3-4

3.11.3.4 Drainage

Some typical underdrain details for soldier piles walls are presented in Figures 3.11.3.4-1 and 3.11.3.4-2.

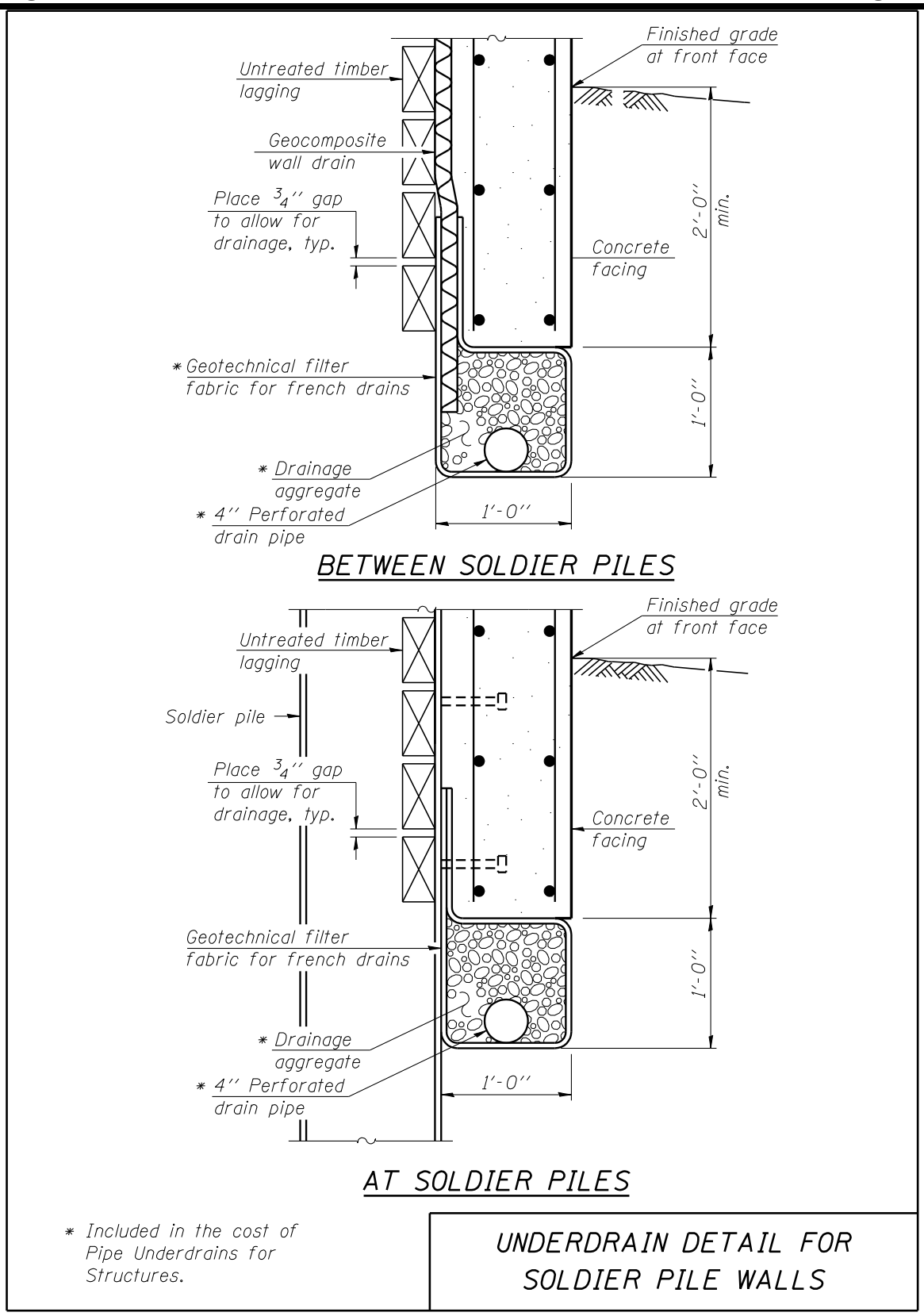

Figure 3.11.3.4-1

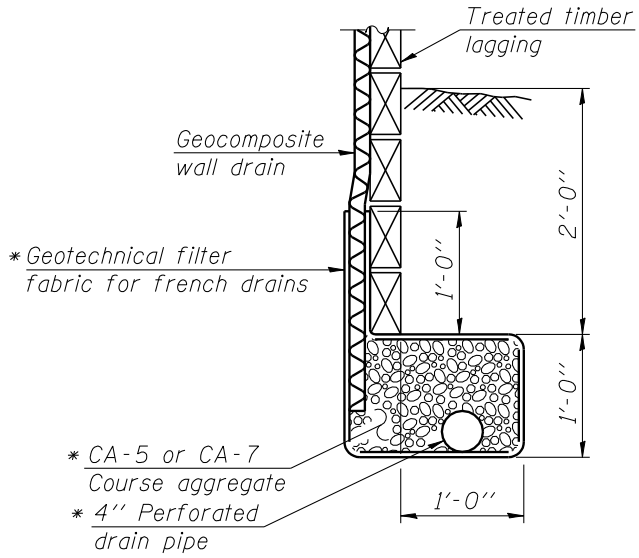

BETWEEN SOLDIER PILES

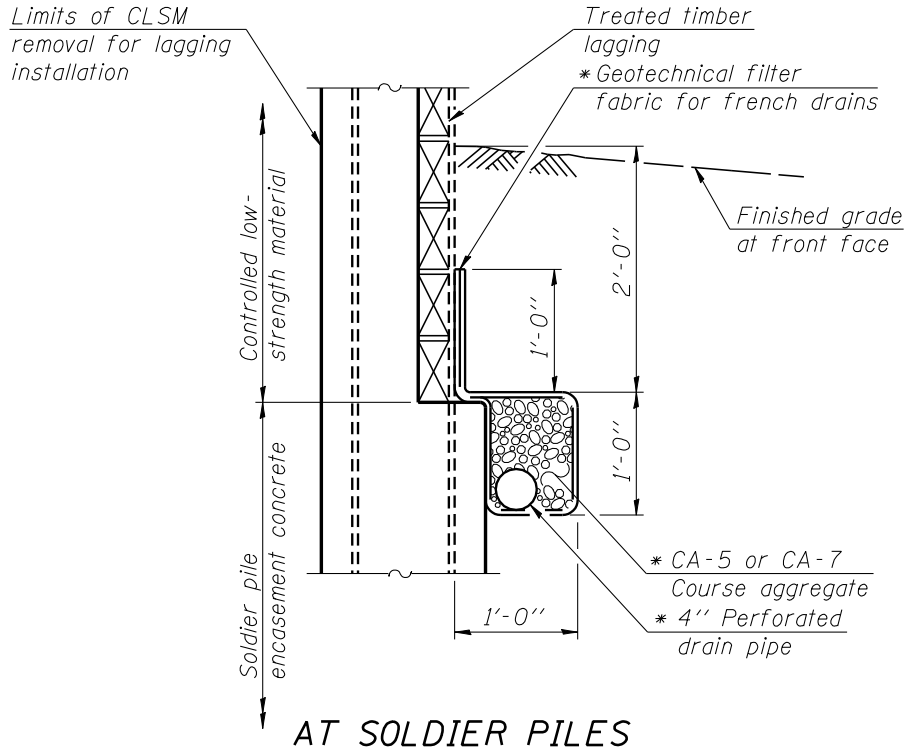

AT SOLDIER PILES

UNDERDRAIN DETAIL FOR DRILLED SOLDIER PILE WALLS WITH EXPOSED TIMBER LAGGING

Figure 3.11.3.4-2

3.11.4 Permanent Sheet Pile

Permanent cantilevered sheet pile retaining walls shall be designed for a 50 year design life unless they are traffic bearing or considered critical, in which case a 75 year design life shall be used.

Design considerations for this wall type include specifying section modulus, drivability of piles, deflection at the top of the wall, corrosion of the piling, and hydrostatic pressure on the wall. The SGR shall be referenced for recommendations and evaluations concerning the geotechnical aspects of the design. The geotechnical engineer providing the SGR should be consulted by the wall designer for assistance when needed.

The design of sheet piling is similar to soldier piles and shall follow the AASHTO LRFD Specifications which requires the tip elevation and section modulus be established using Coulomb's earth pressure coefficients and includes wall friction. The first 3 ft. of passive pressure is normally neglected due to soil disturbance caused by installation of drainage measures and/or facing, possible future changes in grade or utilities installation, and potential loss of soil strength due to freeze-thaw cycles.

Grade 50 steel (AASHTO M202) shall be considered the default material for sheet piling, and shall be used when computing a preliminary minimum design section modulus.

Local buckling effects related to transverse stresses shall only be accounted for when the applied lateral pressure at point of maximum moment is more than 1000 psf. In such cases a reduction factor ρ_p shall be used to reduce the yield strength (F_y).

$$F_{yr} = \rho_p F_y$$

Where:

F_{yr} = reduced yield strength of steel (ksi)

ρ_p = reduction factor for local buckling effects related to transverse stresses, found in Table 3.11.4.1. Note: if the interlocks of the sheet piles are welded, ρ_p may be taken as 1.0.

F_y = yield strength of steel (ksi)

D_P	$(b/t_{min})^* \varepsilon = 20.0$	$(b/t_{min})^* \varepsilon = 30.0$	$(b/t_{min})^* \varepsilon = 40.0$	$(b/t_{min})^* \varepsilon = 50.0$
1000	1.00	1.00	1.00	1.00
2000	0.99	0.97	0.95	0.87
3000	0.98	0.96	0.92	0.76
4000	0.98	0.94	0.88	0.60

Table 3.11.4.1

Where:

D_P = applied lateral pressure at the point of maximum moment (psf)

b = flange width (in.), but not less than 0.707c

c = slant height of web (in.)

t_{min} = minimum of t_f and t_w (in.)

t_f = flange thickness (in.)

t_w = web thickness (in.)

$\varepsilon = \sqrt{\frac{34}{F_y}}$

F_y = yield strength of steel (ksi)

Note: Intermediate values may be interpolated linearly.

Since using Table 3.11.4.1 requires information based on the specific sheet pile section to be used, which will not be determined until the contractor chooses a section, the designer shall assume the pile with the largest (b / t_{min}) that meets the minimum section modulus required for strength design.

The preliminary minimum section modulus (S_x) shall be calculated using F_{yr}, and shall be increased to account for applicable factors such as corrosion, driving stresses, and deflection controls.

Corrosion shall be accounted for by the designer using the minimum design section modulus (S_x) and the desired design life. Since each sheet has a slightly different corrosion reduction, the Department developed the following formulas to estimate the extra section modulus required to account for corrosion.

a.) For a 50 yr. design life, S_{req} (in^3/ft of wall)= $S_x(1.10) + 2.2$

b.) For a 75 yr. design life, S_{req} (in^3/ft of wall)= $S_x(1.12) + 4.0$

Deflection control and driving stresses may also control the design of the piles, causing S_{req} to be increased further.

The grade of steel, AASHTO specification, and S_{req} shall be shown on the plans.

3.11.4.1 Facing Alternatives

Permanent sheet piling is usually installed with either a cast-in-place facing or the piles above ground left exposed. When the sheet pile is left exposed, the top of the sheets are typically encased with a concrete cap. In some cases, the sheeting can be painted or capped with a steel cap.

3.11.5 Wall Anchorage Systems

Wall anchorage systems are often used in combination with soldier pile and sheet pile walls to reduce overall wall cost, limit deflection and provide additional capacity to resist large horizontal design forces. However, they have been used to stabilize failing CIP T-type walls, as tie-down anchorage, and to address other specialized design needs.

The Structure Geotechnical Report (SGR) shall be referenced for recommendations and evaluations concerning the geotechnical aspects of the design of wall anchorage systems. The geotechnical engineer providing the SGR should be consulted by the designer for assistance when needed. The IDOT Geotechnical Manual can also be referenced for more information and guidance on wall anchorage systems.

The following sub-sections give a brief overview of three common anchorage systems which are use by the Department. These are deadman, helical ground anchors and permanent ground anchors. A subsection with generic details for an anchor head assembly is also presented.

3.11.5.1 Deadman

Deadman anchors are low tech, fairly inexpensive and generally suited for low capacity applications requiring 10 to 60 kips of resistance. Galvanized and/or oversized rods are generally

used to account for corrosion when connecting deadmen to the wall system. In most cases, the anchors are not load tested and only minor tie rod loading is developed as the rods are undergoing installation. Deadman anchors can consist of reinforced concrete which is cast in forms or in trenched excavations, or precast units can be used. Other deadmen types used by the Department include sheet pile, driven H-pile, treated timber lagging, or drilled shafts as shown in Figure 3.11.5.1-1. The design involves calculating the wall anchorage requirements in kips/ft., selecting an appropriate tie rod, and determining an appropriate deadman spacing. Although a continuous deadman can be specified, it is normally more cost effective to employ individual deadman elements which can be designed to utilize the passive pressure adjacent to each element.

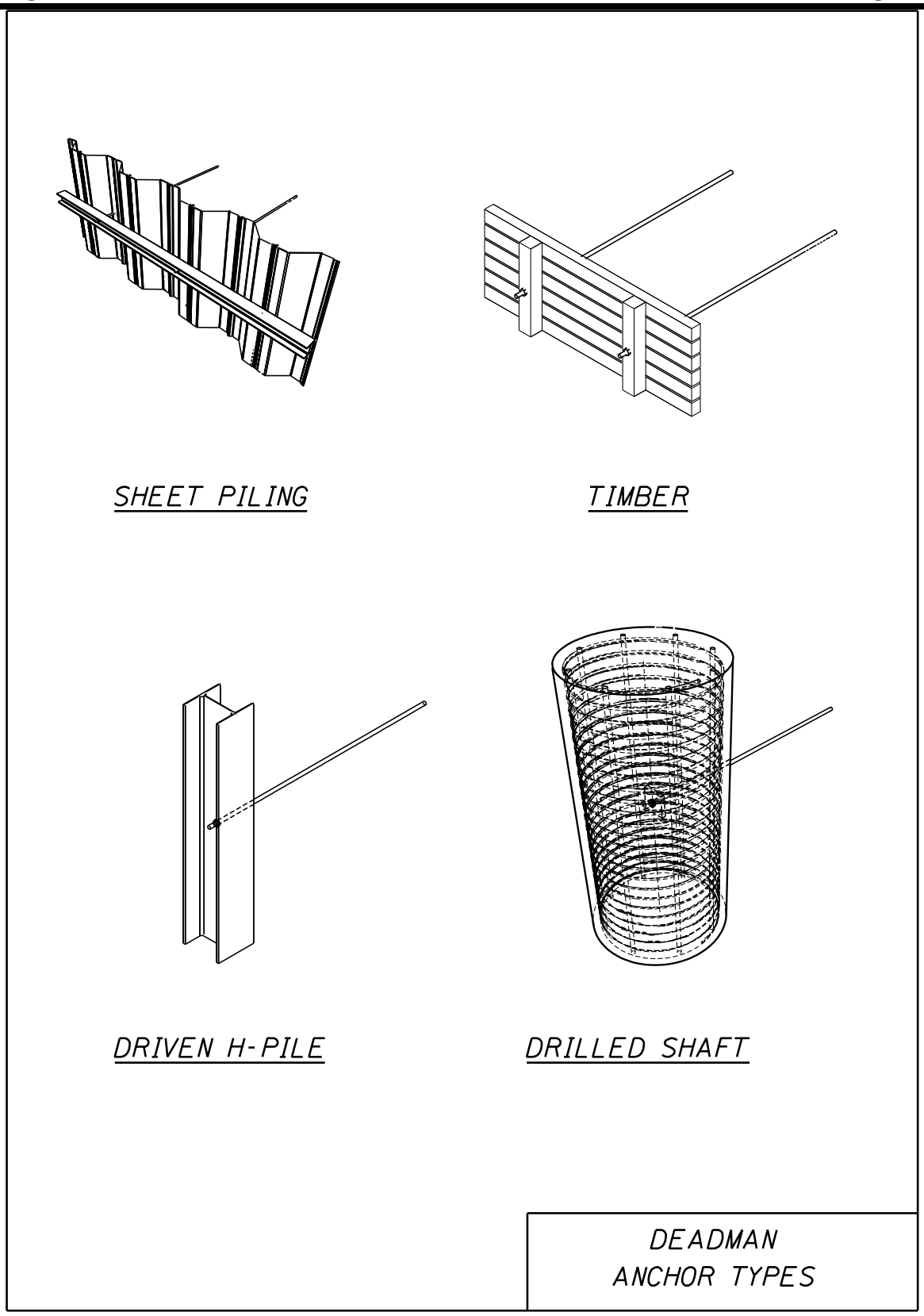

Figure 3.11.5.1-1

3.11.5.2 Helical Ground Anchors

Helical anchors have medium capacity, usually between 60 and 200 kips of nominal resistance. They can be installed at an angle or horizontally. Helical anchors are typically galvanized and oversized to address corrosion. The IDOT Special Provision requires selected anchors to be proof tested and the remaining anchors to develop sufficient installation resistance. In most applications, the anchors are not post tensioned and simply connected to walls in a manner which is similar to that for deadmen. The wall designer shall determine the most cost effective anchor spacing and specify the nominal loading on the plans. The anchor's angle of inclination, minimum extension length, and the estimated helical anchorage length shall also be specified. It is critical that the soil conditions are not too stiff or dense to prevent helical installation, and yet strong enough to allow the supplier to develop a feasible anchor design. The helical anchor supplier shall submit Shop Drawings proposing the number, diameter and embedment of the helical anchors which will be reviewed by the BBS Foundations and Geotechnical and Design Units. Various helical anchor contractors and vendors should be contacted to provide suggestions on both design/installation feasibility as well as comment on the Final Plan details.

3.11.5.3 Permanent Ground Anchors

Permanent ground anchors are typically used for high capacity applications and designed to have a nominal resistance between 100 and 300 kips. They are double corrosion protected and proof tested to 1.33 times the specified nominal design loading. The designer shall also specify the anchor's angle of inclination, the minimum unbonded length, and the estimated bonded length. The specialty anchor sub-contractor shall submit their qualifications and experience during construction, and supply calculations and Shop Drawings indicating the installation method, drilled diameter, and bonded length per the Special Provision for Departmental approval.

3.11.5.4 Anchor Head Assemblies

Figures 3.11.5.4-1 and 3.11.5.4-2 present generic details for an anchor head assembly used on soldier pile walls with exposed timber lagging.

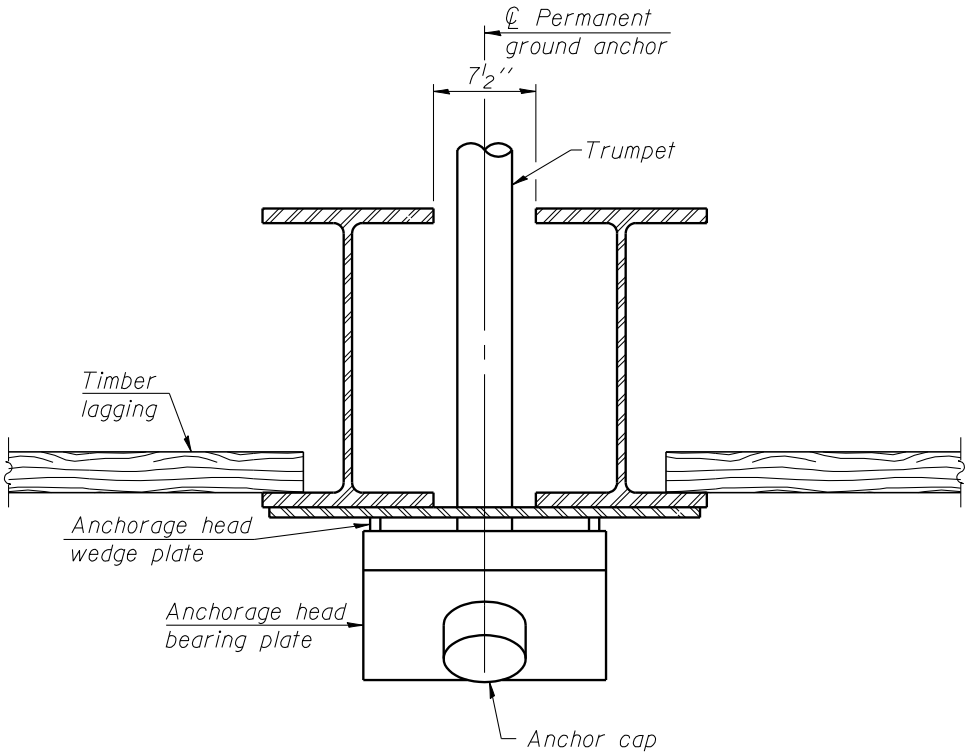

ANCHORAGE PLAN

ANCHORAGE HEAD
ASSEMBLY

Figure 3.11.5.4-1

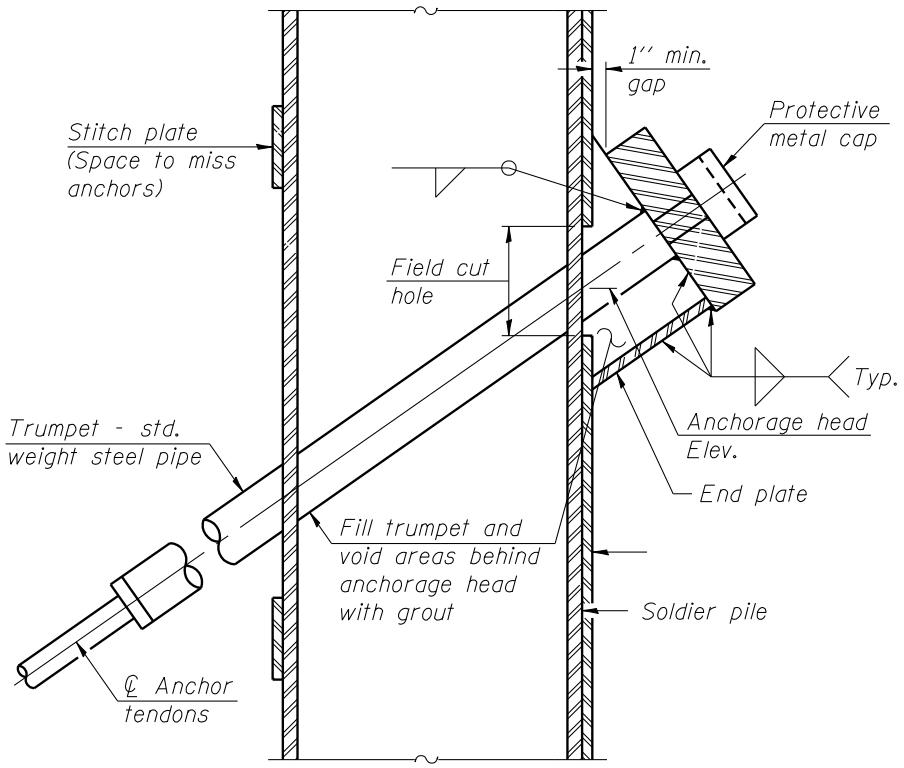

SECTION THRU ANCHORAGE HEAD ASSEMBLY

Figure 3.11.5.4-2

3.11.6 Soil Nailed and Other Specialized Wall Systems

Soil nailed walls are occasionally built in Illinois. They can be a viable option in low head room conditions. For this wall type, there should be enough right-of-way to install the nails to the full required length. Soil nailed walls should be avoided in granular soils or for installation below the water table. If a soil nailed or other specialized wall system is contemplated for a project, contact the BBS for concurrence and coordination.

Segmental Concrete block walls are utilized by the Department in a number of locations where their aesthetics are important and low initial cost is desirable. The Department has concerns with the dry-cast block freeze thaw durability and estimates the average design life at 30 years. Applications where the wall would be subjected to prolonged saturation such as around lakes or streams may shorten the design life even further. Block walls may be designed as gravity walls in lower retention applications, or may require soil reinforcement for taller walls. Generally, it is recommended that these walls not be utilized in critical applications, where a longer design life is required, or when exposure to excessive road salt applications is anticipated. This wall type is designed and contracted similar to MSE walls. The foundation soils should be evaluated to confirm design feasibility and adequate long term performance. Block walls are commonly used in retention applications requiring less than 7 ft. of exposed height. If unique conditions exist where taller wall heights or tiered wall configurations are desired, the District and BBS will provide site specific approval prior to TSL development. Guide Bridge Special Provision 64 provides specifications for Segmental Concrete Block Walls.

The Department also makes use of gabion retaining walls, precast modular wall systems and other unique wall systems which lend themselves to site and project design constraints. Specifications, plan details, and other information may be available from the Department concerning these wall systems upon request.

3.12 Noise Walls

LRFD and LFD

Noise walls or sound barriers have become common in urban areas across the State. The design criteria for these walls are typically separated into two categories, bridge/structure mounted and ground mounted. The wall panels between support posts are generally classified into two types, reflective and absorptive, i.e. some materials or panels reflect sound while others absorb it.

Noise walls should not be fully designed and detailed on the Contract plans. However, the planned locations along with pertinent elevations, lengths, and dimensions shall be. The contractor is responsible for retaining an Illinois Licensed Structural Engineer to design and fully detail noise walls required on the Contract plans with Shop Drawings. These Shop Drawings shall be submitted to the Bureau of Bridges and Structures for review and approval.

The AASHTO "Guide Specifications for Structural Design of Sound Barriers," 2002, should be used in conjunction with other references such as the AASHTO LRFD and Standard Specifications, and the Illinois Standard Specifications for Road and Bridge Construction when designing noise walls.

The nominal design wind load for bridge/structure mounted noise walls shall be 35 psf. For ground mounted noise walls, the nominal design wind load shall be 25 psf.

Panels shall be assumed as simple beams between posts unless other boundary conditions are defined for a particular vendor's noise wall system. For cases where panels don't function as simply supported, or if a panel's strengths are proprietary, information shall be submitted for Departmental approval based upon test certification papers or similar documentation.

When attached to structures, the maximum post spacing for composite, metal or reinforced concrete noise wall panels shall be 15 ft.. When attached to structures, post spacing for wood panels shall be limited to 8 ft. Post spacings greater than these, such as for a proprietary vendor system, are allowed with approval from the Department.

When ground mounted, post spacing shall be per the Contractor's approved design. To aid the Contractor in choosing an appropriate design, any aesthetic or geometric requirements or limitations shall be shown on the contract plans.

The shaft foundation dimensions shall be determined by the contractor as part of the Shop Drawing submittal. The noise wall subsurface exploration boring data should be provided on the plans. The designer shall specify the appropriate foundation design parameters (unit weight of soil, soil internal friction angle, soil cohesion intercept) on the plans. Broms method is normally used to determine the foundation depth and diameter using a Factor of Safety of 2.0 on the soil shear strength. When no boring data is available, the plans shall include a note requiring the contractor to assume a unit weight of 70 pcf, a friction angle of 30° and a cohesion intercept of 0 ksf when designing the shaft foundation dimensions.

Drilled shaft foundations shall be reinforced and designed according the AASHTO LRFD or Standard Specifications. Posts shall be either embedded in or mounted to the shafts with anchor bolts as required by design.

To ensure that Charpy V-Notch tests are performed on all anchor bolts for noise walls, all anchor bolts shall be specified as ASTM F1554 Grade 55 or 105.

For embedded posts, the embedment length shall be 80% of the drilled shaft foundation length. Foundation reinforcement shall include a minimum of 8 - #5 vertical bars symmetrically placed and tied with #3 bars or spirals at 6 in. centers. An additional tie or 1 ½ turns of the spiral shall be provided at the top and bottom of the foundation.

The connection for bridge/structure mounted noise walls shall be as required by design.

3.13 Temporary Construction Works

There are a number of situations where temporary construction works are required when a structure is being built. They typically facilitate operations by retaining soil or water or both from an aspect of a structure (e.g. the foundation or at a stage construction line) which is under construction. The Department has developed policies and some straightforward methods for the design of temporary construction works. The following subsections present policy and methodology overviews for some commonly employed techniques. References are also provided for design guides that are available online.

The spectrum of significance (and cost) for temporary construction works is rather broad. Major river bridge crossings which require cofferdams with seal coats for the foundations and pylons or piers are the most costly while single span rural bridges where only temporary sheet piling is necessary at a stage construction line for abutments is on the lower end of cost. The middle of the spectrum for temporary construction works includes pay items for Temporary Soil Retention Systems, Temporary Geotextile Retaining Walls, Temporary MSE Walls, and Braced Excavations.

The Structure Geotechnical Report (SGR) should be referenced for information and recommendations concerning construction considerations. When necessary, the geotechnical engineer responsible for the report should be contacted for further information or clarification(s).

3.13.1 Temporary Sheet Piling, Temporary Soil Retention Systems and Braced Excavations

Temporary sheet piling is used for retaining soil in a “cut” situation during construction. Typically, it is a simple cantilevered design without wales or anchorages. When cantilevered sheet pile is not sufficient, a temporary soil retention system should be specified by the designer. For cases where soil retention is required on both sides of a substructure unit and excavation will be in the dry, a braced excavation may be specified. The SGR should be referenced for recommendations concerning which method (or possibly a combination of methods) may be more appropriate for a project.

Temporary sheet piling should be designed by the engineer responsible for the Contract plans. The contractor is responsible for retaining an Illinois Licensed Structural Engineer to detail the

design of temporary soil retention systems and braced excavations. As such, it is the contractor's option as to the method or combination of methods by which the required soil will be retained. These designs shall be submitted to the Bureau of Bridges and Structures for review and approval. Redesigned temporary sheet piling designs that differ from the Contract plans are allowed and shall also be submitted for review.

Design Guide 3.13.1 gives the engineer step-by-step instructions, design aids and an example for the design of cantilevered temporary sheet piling systems. Figure 3.13.1-1 illustrates an example temporary sheet piling design. It includes typical details which shall be given on the Contract plans such as: minimum tip elevations, minimum required section moduli, ground surface/top of sheet piling elevations, retention limits (or exposed surface area), cut slopes required for construction (maximum excavation lines), removal of existing structures, stage lines, existing footings which may interfere with sheeting penetration, etc. Other details which should be shown if applicable but are not in Figure 3.13.1-1 include: buried utilities, overhead power lines, top of rock, etc. Also note that the horizontal dimensions and slopes shown on the Contract plan shall be along the face of the temporary sheeting or temporary soil retention system.

A temporary soil retention system should typically be used when a cantilevered sheet pile design is not feasible. Figure 3.13.1-2 presents an example temporary soil retention system specification as it should appear on the Contract plans. The figure shows how the example presented in Figure 3.13.1-1 would appear if a temporary soil retention system were specified instead of temporary sheet piling. Much of the same information is shown in both figures, but fewer details related to design are required for temporary soil retention systems. Specifically, do not show: wales, soldier piles, sheeting, deadmen, or any other potential retention system components on the Contract plans when a temporary soil retention system is specified. Showing specific items may lead to confusion in the bidding process as the contractor may believe they are part of the plans. In the plan view, only show the "zigzag" pattern usually associated with sheet piling and labeled as "Temporary Soil Retention System."

The quantity for payment on the Contract plan's Bill of Materials for temporary sheet piling is specified in Guide Bridge Special Provision (GBSP) 32 and for temporary soil retention systems it is specified in GBSP 44.

For applicable plan notes related to temporary sheet piling and temporary soil retention systems, see Section 3.1.3.

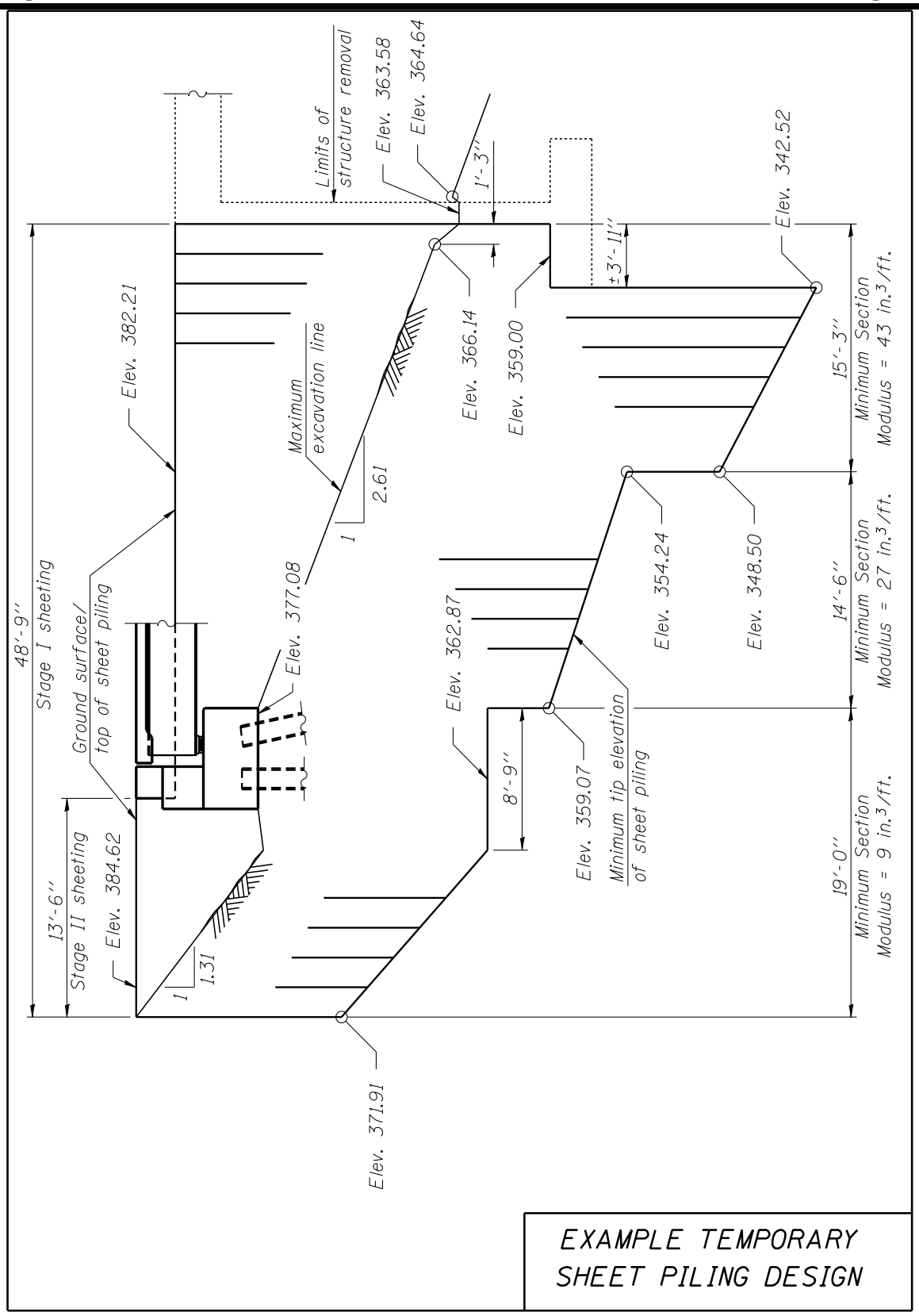

Figure 3.13.1-1

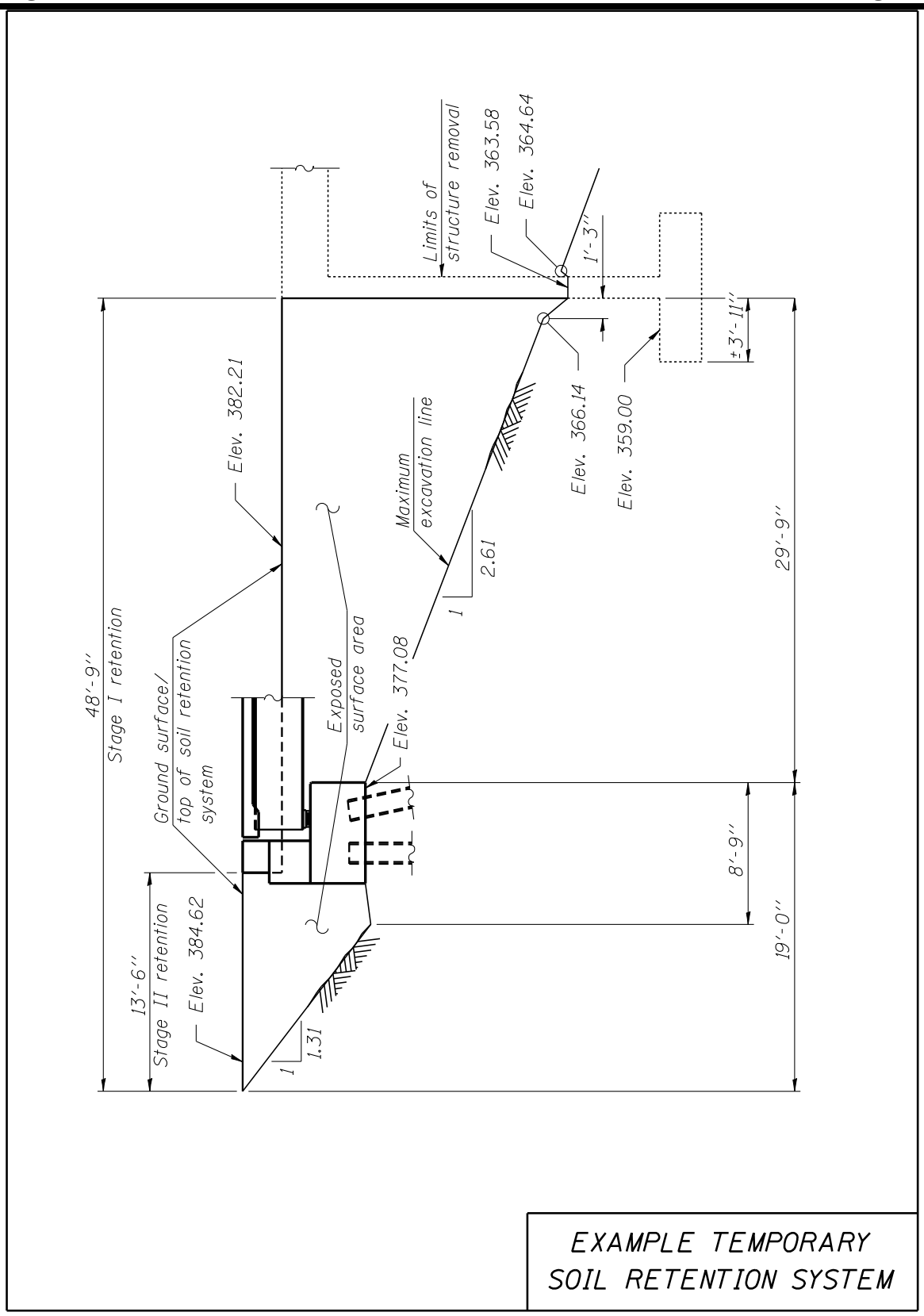

Figure 3.13.1-2

3.13.2 Temporary Geotextile Walls and Temporary MSE Systems

Geotextile retaining walls, which are used as temporary construction works in "fill" situations, are becoming common. They can retain Stage I backfill over new box culverts where sloping the fill above the box is not practical or cost effective. Geotextile retaining walls can also be used for temporary surcharge retention and where bedrock or existing infrastructure prevents driving sheet piling. It is also not uncommon for geotextile retaining walls to be used in conjunction with temporary sheet piling or a temporary soil retention system. For "purely fill" applications, the Department prefers that the designer specify a temporary geotextile retaining wall over a temporary soil retention system (See Section 3.13.1) because it reduces cost and construction delays. Guide Bridge Special Provision 46 provides specifications for Geotextile Retaining Walls.

Temporary Mechanically Stabilized Earth (MSE) systems can also be used in fill situations. See Section 3.11.1. Temporary MSE walls are typically used when a temporary geotextile retaining wall is not sufficient to retain the required soil for a particular project. For significant retained heights, large quantities of soil, or when project constraints are difficult, a temporary MSE wall may be warranted. Guide Bridge Special Provision 57 provides specifications for Temporary MSE Walls.

A geotextile retaining wall should be designed and detailed on the final Contract plans. The contractor is required to retain an Illinois Licensed Structural Engineer to perform the internal stability analysis and design of a temporary MSE wall and submit it to the Bureau of Bridges and Structures for review and approval. The procedure is similar to that required by the Department for permanent MSE walls.

For design, geotextile retaining walls require both internal and external stability analyses. Geotextile retaining wall external stability design is very similar to that of MSE walls. See Section 3.11.1. Considerations include bearing capacity, settlement, sliding, overturning, and global slope stability. Unlike MSE wall requirements, however, the designer responsible for the Contract plans is required to perform the internal stability analysis of the "reinforced mass" according to the AASHTO Standard Specification's provisions for MSE walls. Internal stability analysis and design involves determining the geotextile reinforcement length required to develop an adequate "pullout" factor of safety as well as the maximum service stress in the geotextile reinforcement. This maximum stress is specified on the plan as T_{min}. It is a necessary piece of information required

by the contractor for building the wall as detailed on the plans. Design Guide 3.13.2 presents a detailed procedure for the design of temporary geotexile retaining walls.

Figure 3.13.2-1 presents a typical example of a geotextile retaining wall for a box culvert which is under construction. Shown are plan and typical section views.

The plan view should show: beginning and ending locations, any changes in the wall face alignment, and the approximate rear limits of the geotextile reinforcement. Existing and proposed structures as well as any stage construction sheet piling should also be indicated. When the sides of a fabric wall are constructed against or adjacent to a structure, the fabric should be shown to "lap back" against the structure 3 ft. to prevent soil leakage.

The typical section view should include: the geotextile reinforcement embedment length, the re-embedment lengths, the vertical spacing of the geotextile reinforcement layers, the dimensions to the stage construction and stage removal lines, and the distance between the wall face and the proposed pavement joint, normally at least 2 ft. Typically, the geotextile reinforcement length is set at a minimum ratio of 1.0 times the retained height. Re-embedment within the wall shall not be less than 4.0 ft. with the first 1 ft. making contact with the geotextile layer above while the remaining 3 ft. is embedded 3 in. into the select fill. The top re-embedment length should be shown extending to the rear limits of the geotextile reinforcement. Vertical spacing of geotextile reinforcement is typically 1 ft.

An elevation view should also be provided and indicate the exposed surface area including the top, bottom and any steps in the wall. When a geotextile wall is used with sheet piling, the fabric should be shown in this view to overlap or extend past the sheeting by 3 ft. to prevent soil leakage and allow for sheeting deflections as the backfill proceeds.

Figure 3.13.2-2 illustrates a standard construction sequence and Figure 3.13.2-3 presents a "form brace detail" used for construction of temporary geotextile retaining walls. The following instructions should accompany the construction sequence details shown in Figure 3.13.2-2:

1. Place form brace system on completed reinforcement level; back from the finished fabric face a distance of ⅓ to ½ the geotextile reinforcement spacing.

2. Position fabric so that the required geotextile re-embedment length extends over the top of the form brace and the design reinforcement width is placed with no slack against the previous level.
3. Compact select fill material in lifts to final lift height, create (± 3 in.) depression in zone where re-embedment length will be located and place additional height of compacted select fill again form brace.
4. Fold geotextile re-embedment length back over form brace into zone where depression was made in select fill and place additional select fill (± 3 in.) to embed geotextile and bring to final lift height.
5. Pull form brace outward allowing geotextile face to slightly readjust to form tight round face level with plan reinforcement spacing.

Providing drawings similar to Figures 3.13.2-1 to 3.13.2-3, and an elevation view along with the instructions above and the note below which specifies T_{min} is typically adequate detailing for the Contract plans which should all fit on 1 plan sheet.

> *The geotextile soil reinforcement shall have a minimum allowable tensile strength (T_{min}) of ___ lb./in. as determined by the procedure described in the Special Provision. The computations supporting the determination of T_{min} shall be submitted to the engineer for approval.*

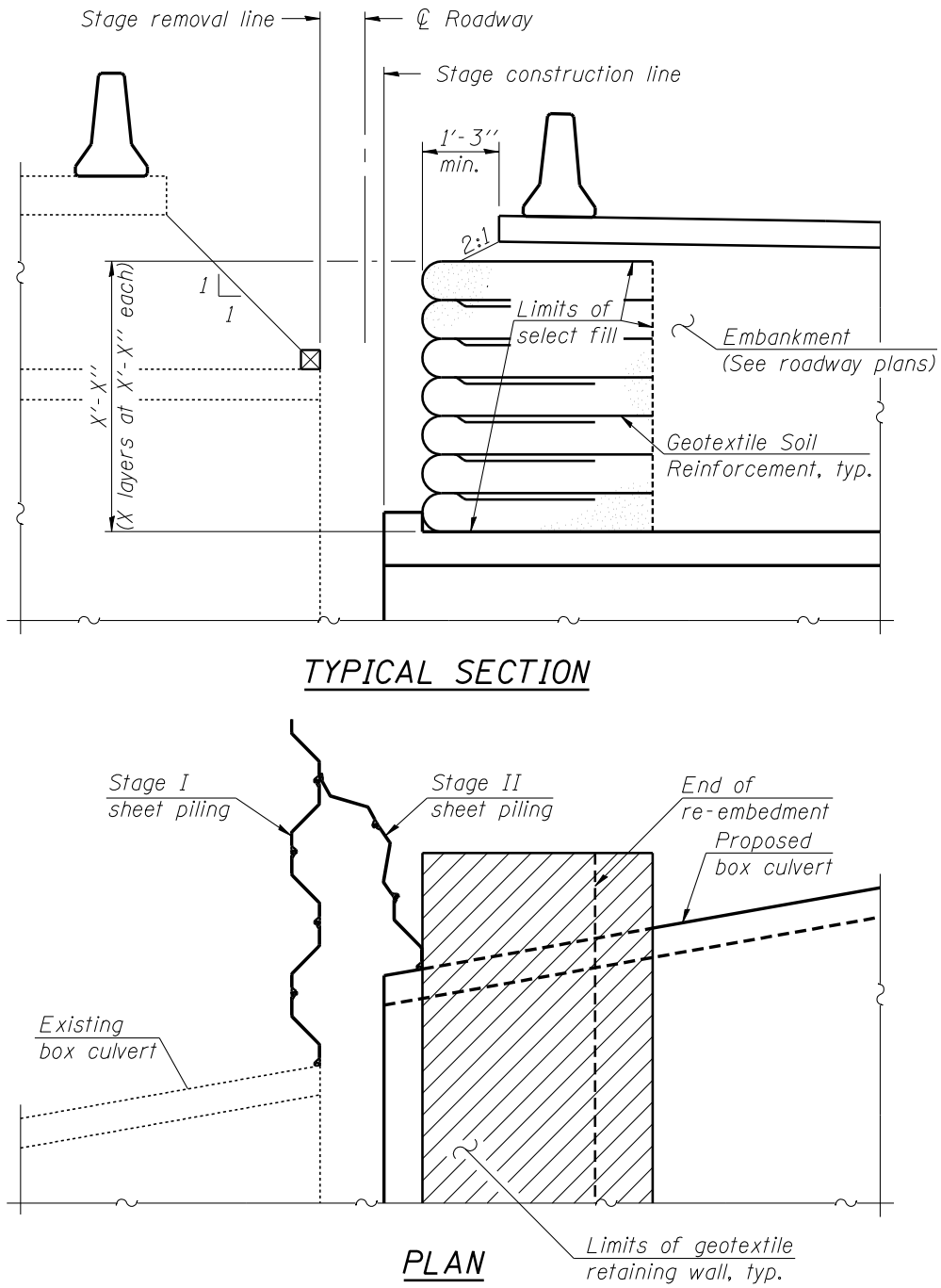

Note:
The geotextile soil reinforcement shall have a minimum allowable tensile strength (T min.) of X lb./in. as determined by the procedure described in the Special Provision. The computations supporting the determination of T min. shall be submitted to the engineer for approval.

TEMPORARY GEOTEXTILE WALL PLAN AND TYPICAL SECTION

Figure 3.13.2-1

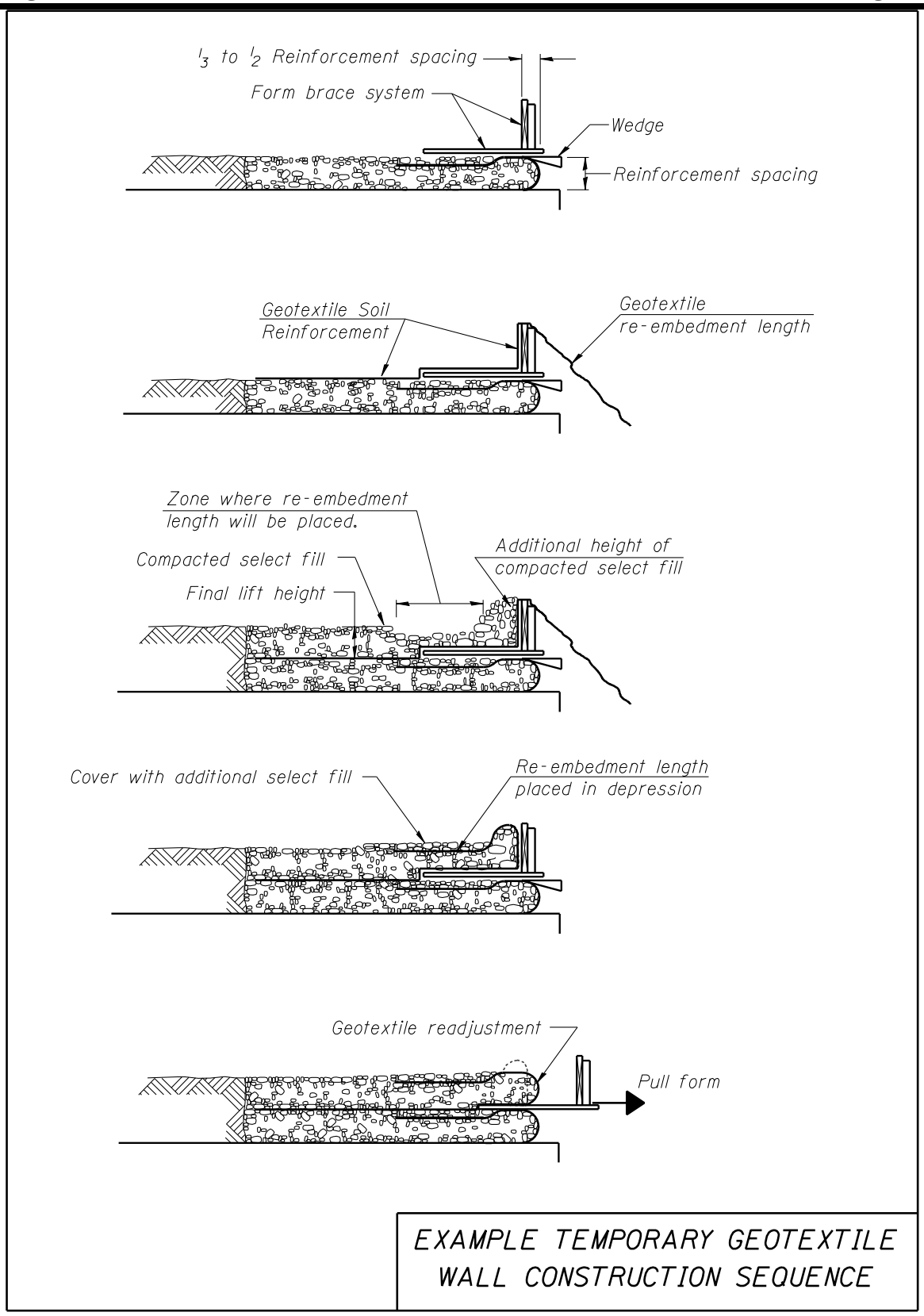

Figure 3.13.2-2

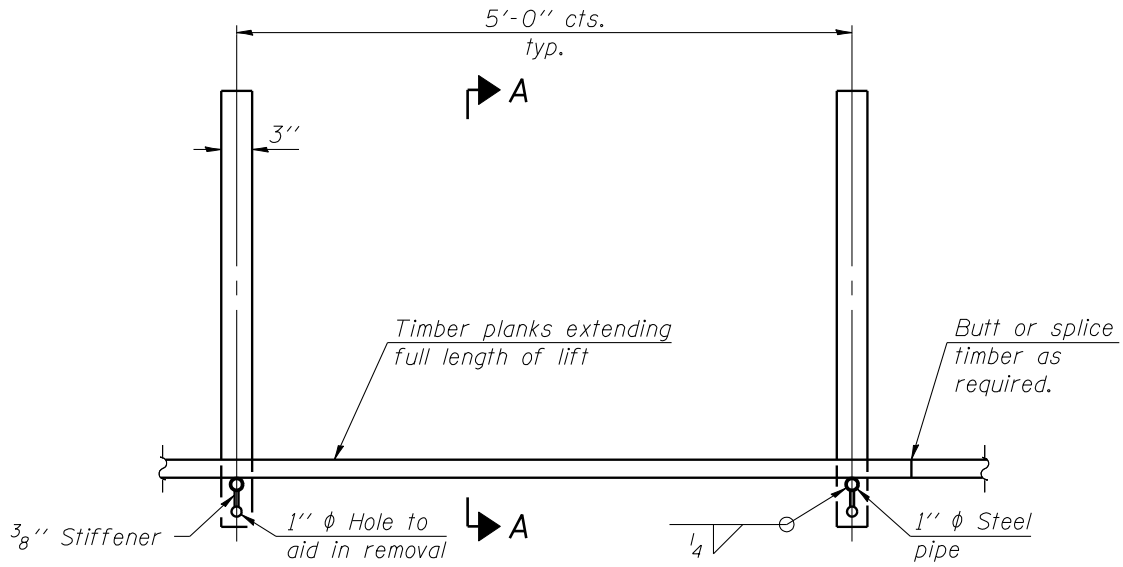

FORM BRACE DETAIL

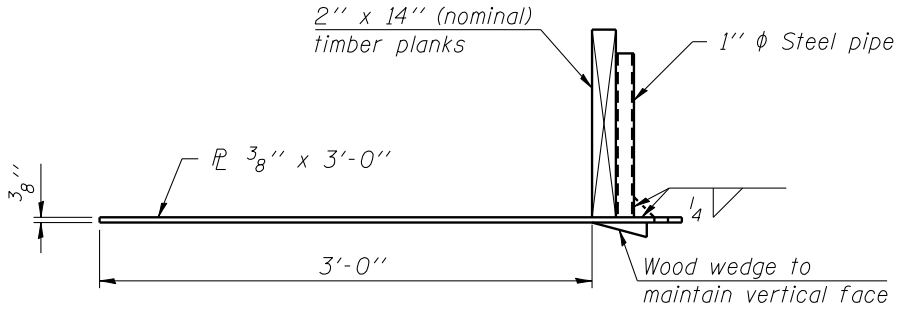

SECTION A-A

EXAMPLE TEMPORARY GEOTEXTILE
WALL CONSTRUCTION SEQUENCE

Figure 3.13.2-3

3.13.3 Cofferdams and Seal Coats

Cofferdams are employed in situations where water is anticipated to be present in areas of cast-in-place concrete construction. Exceptions to this policy are when web walls, drilled shafts with permanent casing or removable forms, and individual concrete encasement of piles are proposed. In these cases tremieing concrete underwater into forms is permitted, and General Note 47 shall be added to the plans. The Department uses two types of cofferdams depending upon the anticipated depth of water above the bottom elevation of the substructure concrete. Type 1 cofferdams are used when the Estimated Water Surface Elevation (EWSE) is higher than the bottom elevation of the substructure by six feet or less and reasonable pumping efforts cannot be assumed to keep the excavation free from ground water. If the EWSE is more than six feet above the bottom elevation of the substructure, then a Type 2 cofferdam shall be used. All cofferdams are required to be dewatered. Any time the use of a seal coat is required to effectively dewater the cofferdam, then a Type 2 cofferdam shall be specified. When seal coat is specified General Note 26 shall be added to the plans.

See Section 2.3.6.4.2 for more information on the EWSE. When type 2 cofferdams are necessary, the top of cofferdam elevation specified in the Contract plans should be 3 ft. above the EWSE. Seal coat, as depicted in Figure 3.13.3-1 is tremied underwater after excavation and pile driving are complete. It prevents water from seeping beneath sheet piling into a dewatered cofferdam. Typically, seal coats are required when a significant amount of the soil at the site of a cofferdam is permeable (i.e. sandy).

The contractor is required to submit cofferdam designs to the Department prepared and sealed by an Illinois Licensed Structural Engineer. In addition, for all Type 2 cofferdams, the plans and computations shall be submitted to the Bureau of Bridges and Structures for review and approval before any work on the cofferdams commences on a project.

Excavation required for both types of cofferdams shall be paid for as Cofferdam Excavation.

Typically, cofferdams are specified such that there is only one cofferdam pay item per substructure unit, regardless of whether or not stage construction is present. However, for widening projects where the pier is being widened on either side by differing lengths, two pay items may be used to account for the fact that the two cofferdams are different sizes and are completely separate from each other.

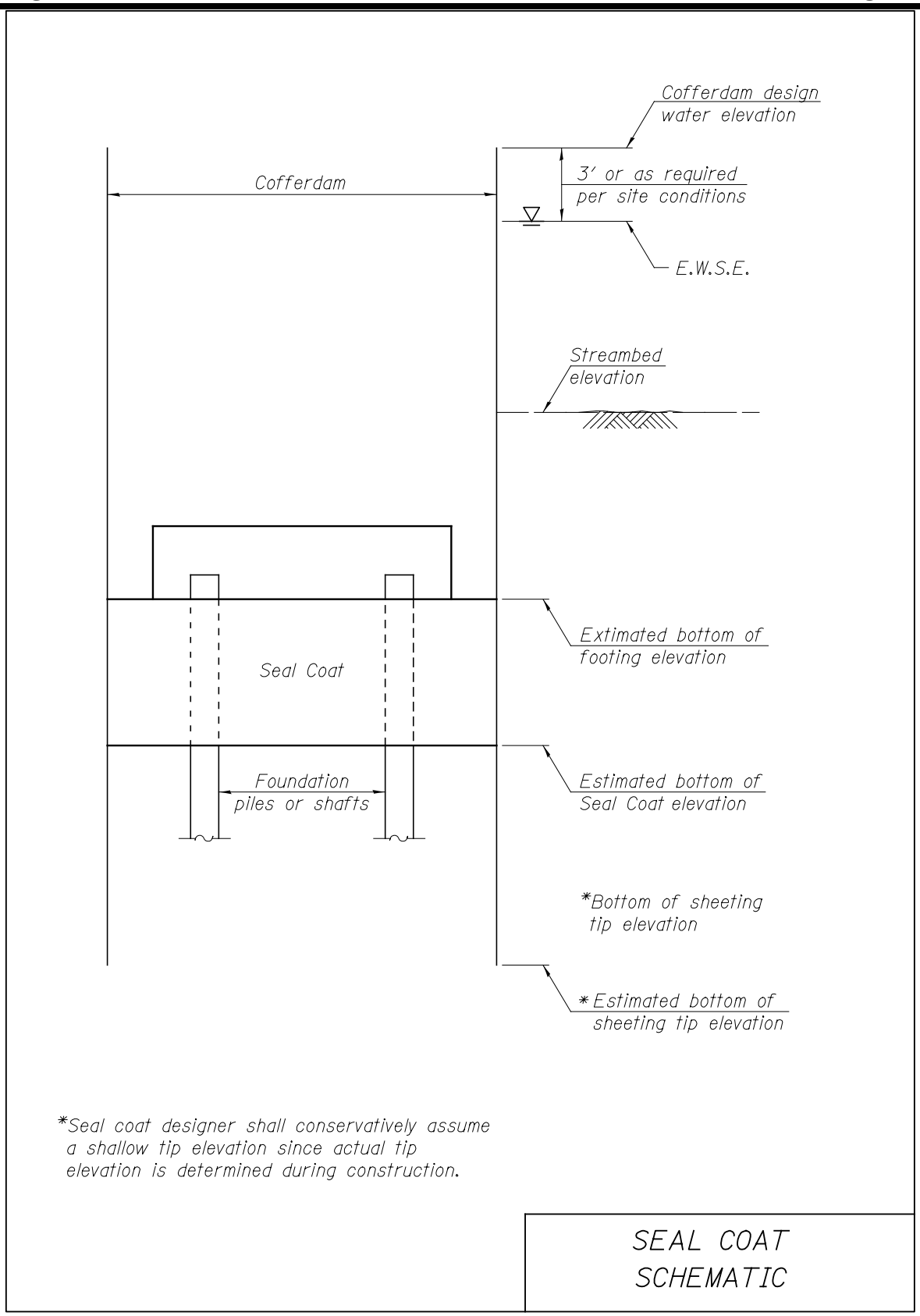

Figure 3.13.3-1

Seal coats are designed to resist the hydrostatic buoyancy force (P_b) caused by the dewatering of a cofferdam. This design force is counteracted by the weight of seal coat concrete (P_{sc}), the resistance provided by the temporary cofferdam sheet piling (P_{sp}), and the resistance provided by the permanent foundation piles (P_{fp}). The factor of safety for the seal coat design is calculated as,

$$FS = \frac{P_{sc} + P_{sp} + P_{fp}}{P_b}$$

Detailed methods for seal coat design and analysis can be found online in Design Guide 3.13.3. This design guide should be referenced for seal coats designed for the Contract plans as well as those which are redesigned by the contractor. The designer is responsible for the initial seal coat design on the contract plans. This is used for establishing the seal coat quantities. The Contractor is responsible for the final seal coat design to be used in conjunction with the final cofferdam design.

Pay limits for cofferdams to be shown in the plans are given in the Illinois Standard Specifications for Road and Bridge Construction.

3.14 Embankment and Slopewalls

3.14.1 Embankment

Figures 3.14.1-1 and 3.14.1-2 show embankment plans for single and dual bridge pile supported stub abutments. A construction procedure for embankment cones is detailed in Figure 3.14.1-3.

Bridge cone embankment quantities and the lengths of pipe culverts under the bridge cone shall not be shown on the Design plans. These quantities are supplied by the District and will be included in their "Summary of Quantities" for the complete Contract plans. The following General Note shall also be included on the Contract plans (repeated from Section 3.1.3):

> *The embankment configuration shown shall be the minimum that must be placed and compacted prior to construction of the abutments.*

On the General Plan sheet, the end of approach slab at the abutment shall be indicated.

3.14.2 Slopewalls - General

For complicated slopewall configurations, an additional sheet should be included with the General Plan sheet showing sufficient dimensions and elevations to clarify the details.

3.14.3 Abutment Berms

A note shall be placed on the plans indicating that all abutment berms shall be sloped ½ in. per ft. to drain.

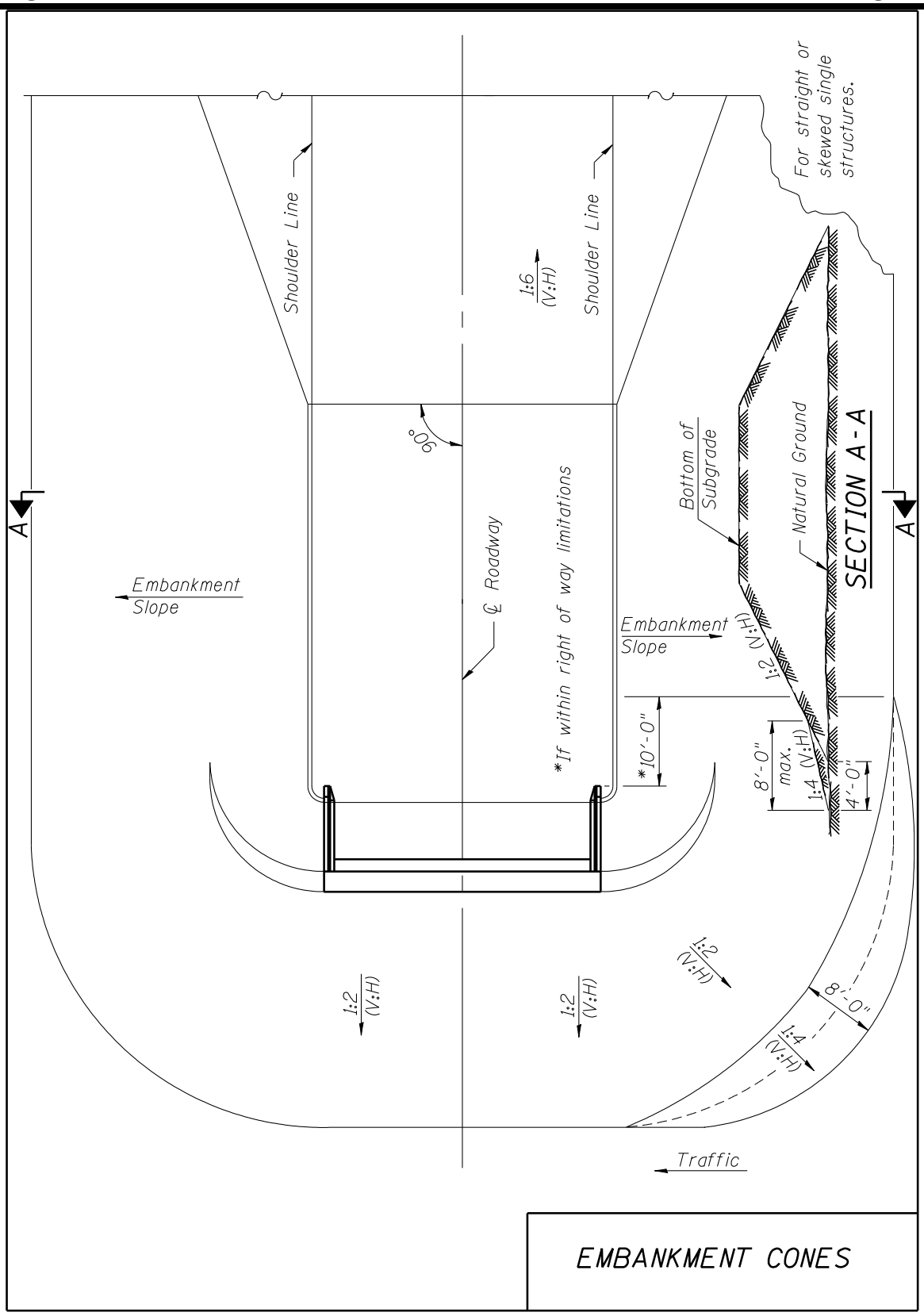

Figure 3.14.1-1

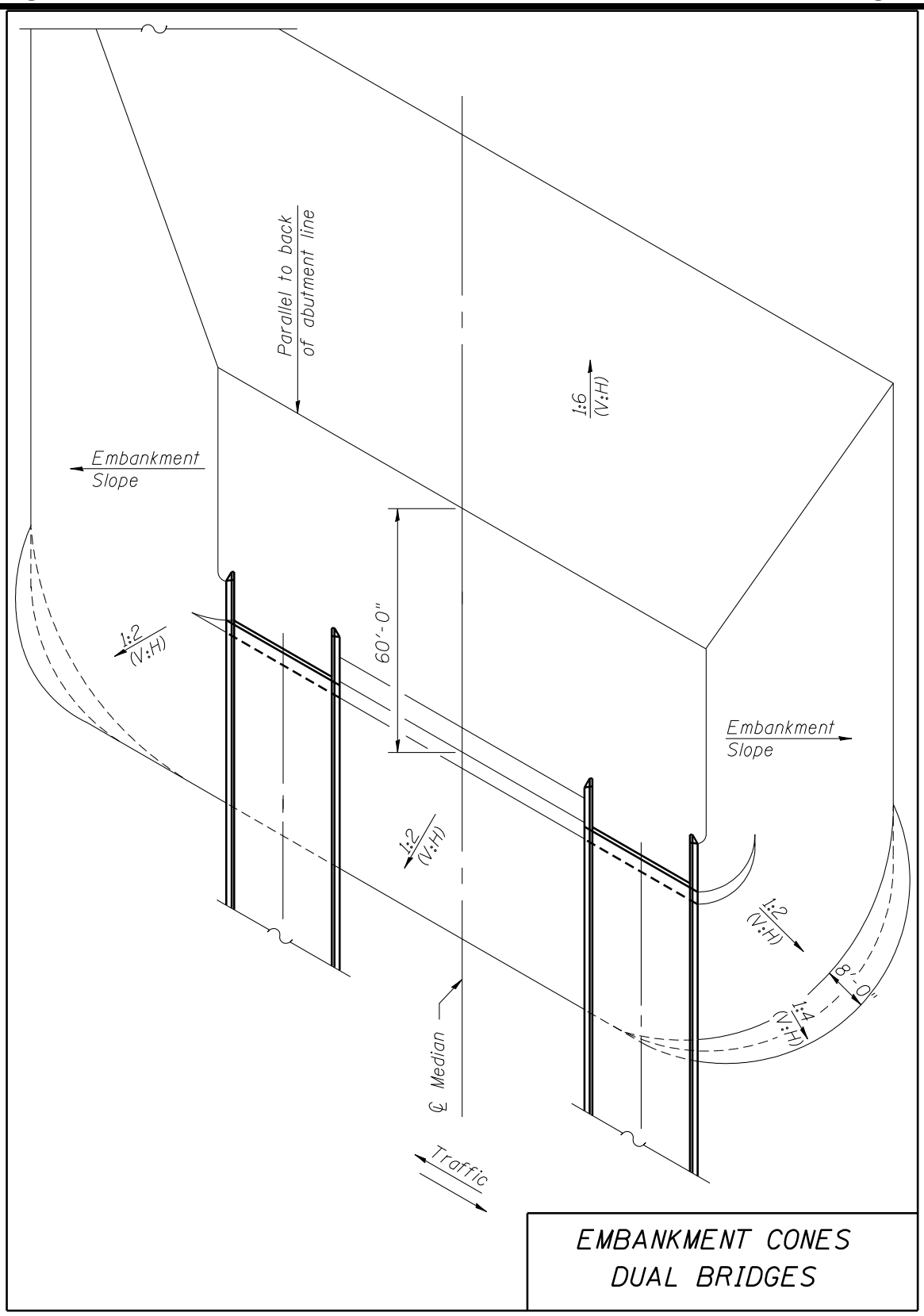

Figure 3.14.1-2

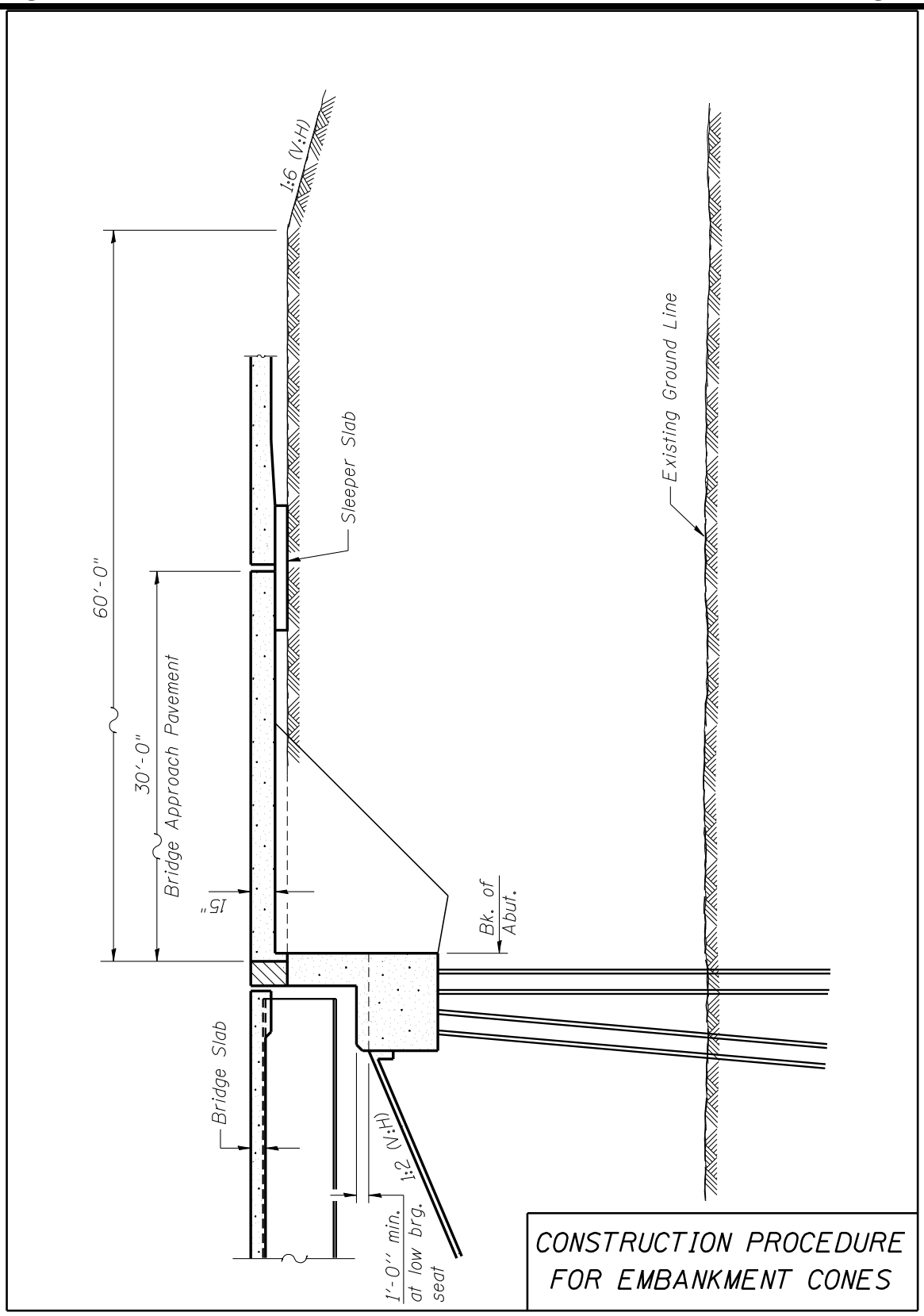

Figure 3.14.1-3

3.14.4 Slopewalls (Grade Separations)

3.14.4.1 Concrete

The thickness of concrete slopewalls shall be 4 in., and they shall be reinforced with welded wire fabric, 6 in. x 6 in. - W4.0, weighing 58 lbs. per 100 sq. ft. Cost of the mesh is included in the cost of the slopewall. Under a single structure, the slopewall shall be paved 2 ft. beyond the outside limits of the superstructure if the structure does not have drains above the slopewall and 5 ft. if the structure does have drains above the slopewall. The lateral edges shall be provided with cut-off walls for control of possible erosion. See Figure 3.14.4.1-1 for a cut-off wall detail.

The embankment slope between dual structures shall not be paved when the distance between adjacent slopewall edges exceeds 10 ft.

Paved slopewalls shall be separated from contact with a pier by a 2 in. preformed joint filler. This is detailed in Figure 3.14.4.1-1. No preformed joint filler is required between a paved berm and the front of an abutment cap except for integral structures as shown in Figure 3.14.4.1-2.

Details for a concrete slopewall with a paved berm are given in Figure 3.14.4.1-3.

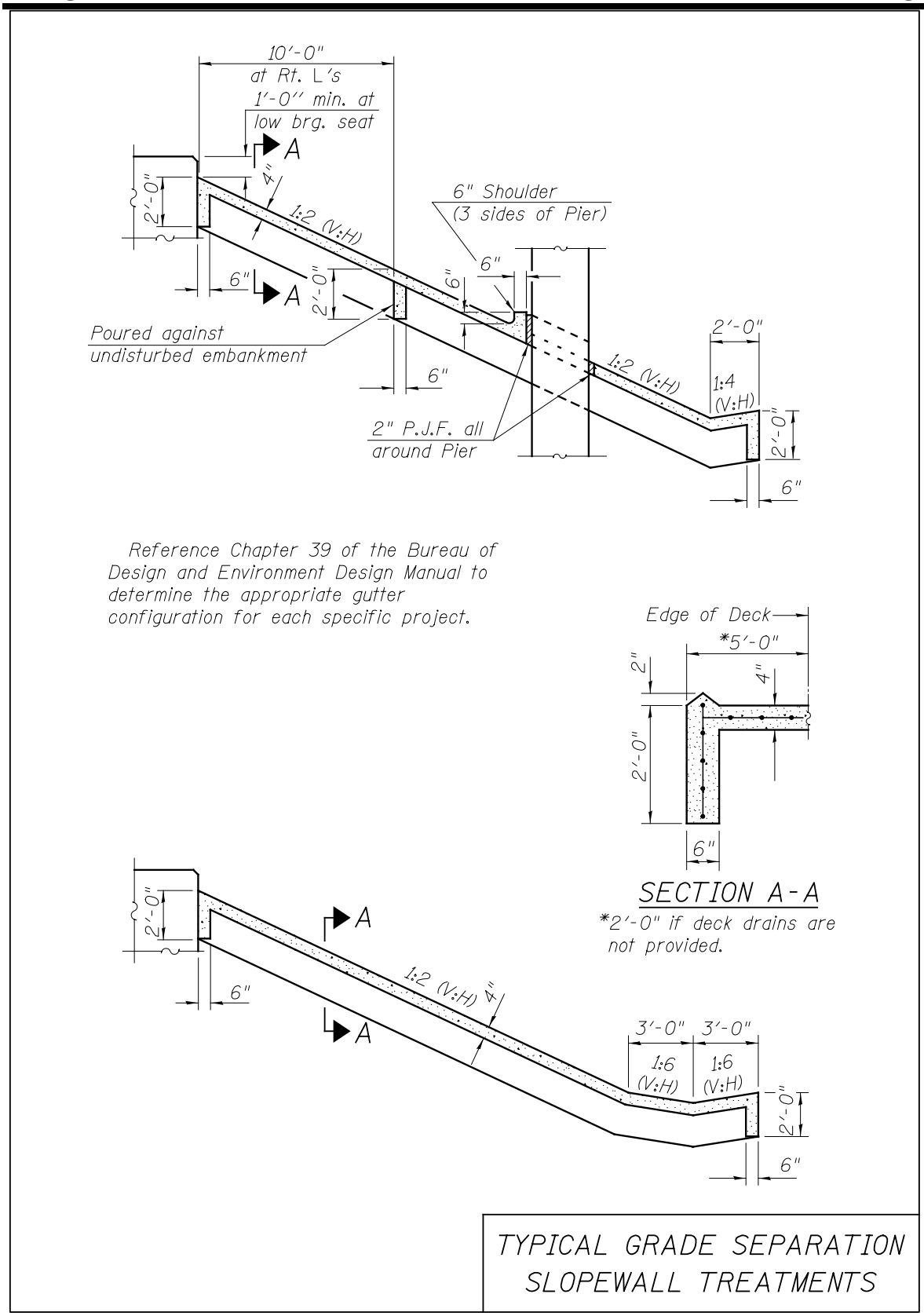

Figure 3.14.4.1-1

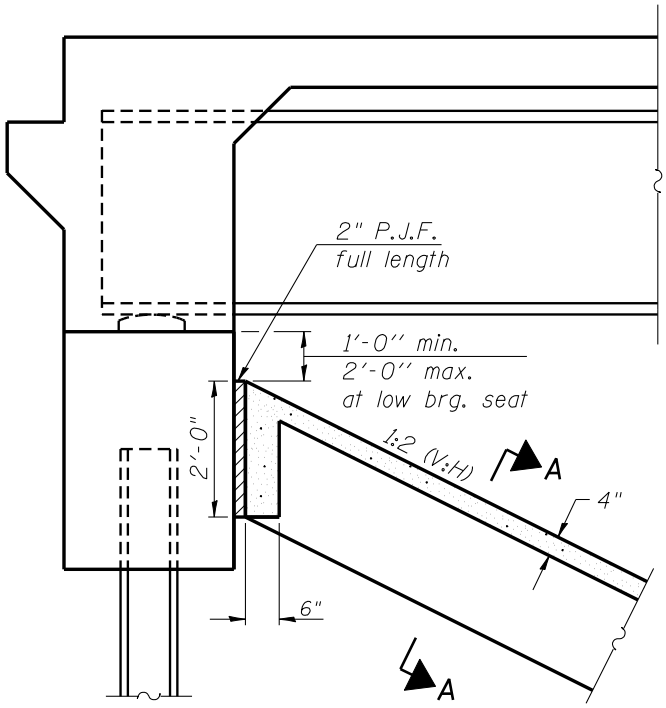

INTEGRAL ABUTMENTS

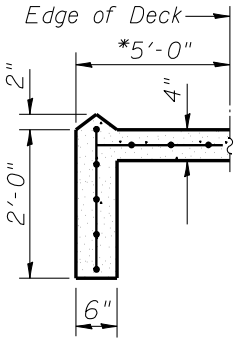

*2'-0" if deck drains are not provided.

SECTION A-A

SLOPEWALL TREATMENTS
GRADE SEPARATIONS

Figure 3.14.4.1-2

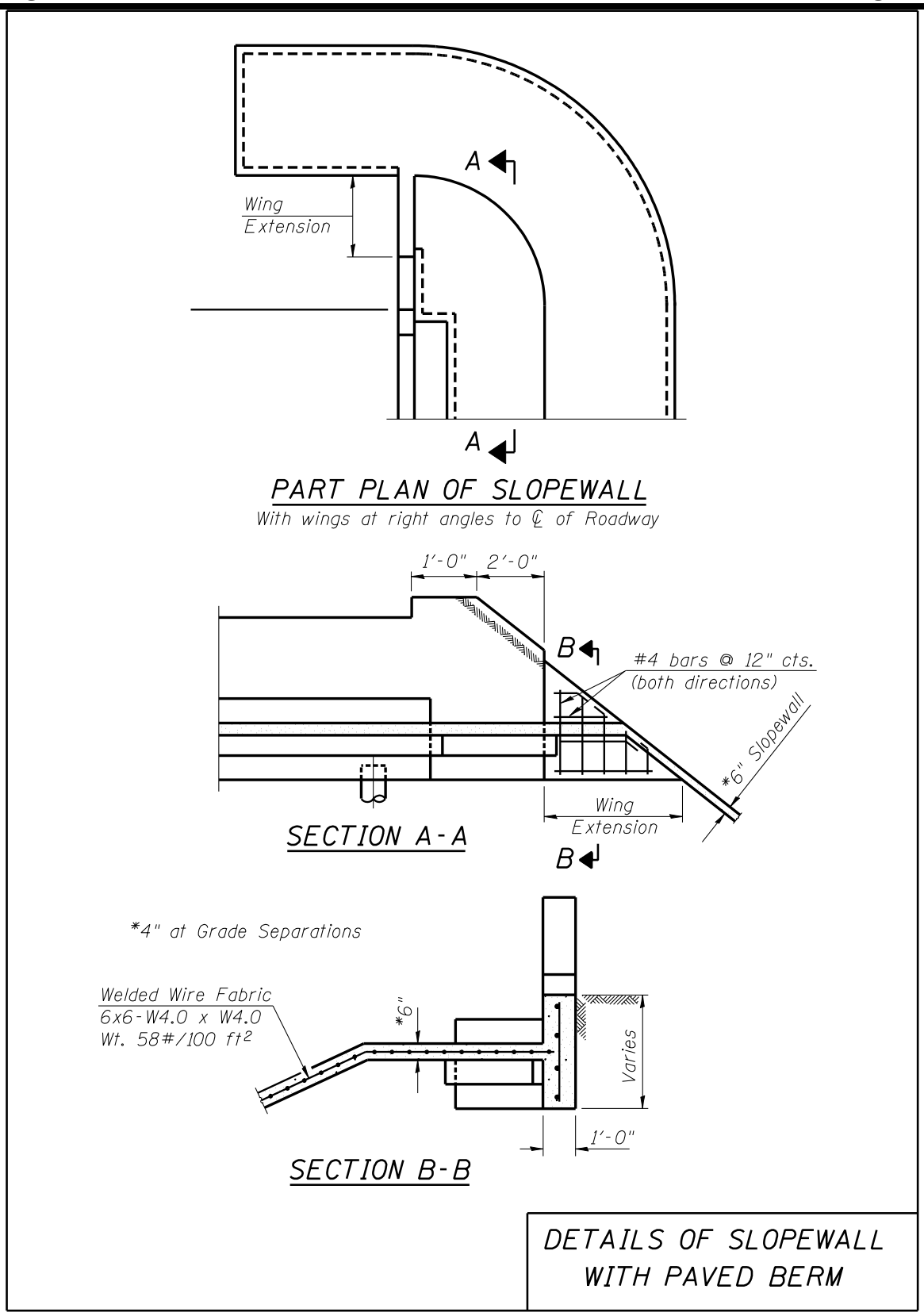

Figure 3.14.4.1-3

3.14.4.2 Bituminous

Figure 3.14.4.2-1 presents details for a bituminous slopewall. Bituminous slopewalls are typically used at railroad crossings.

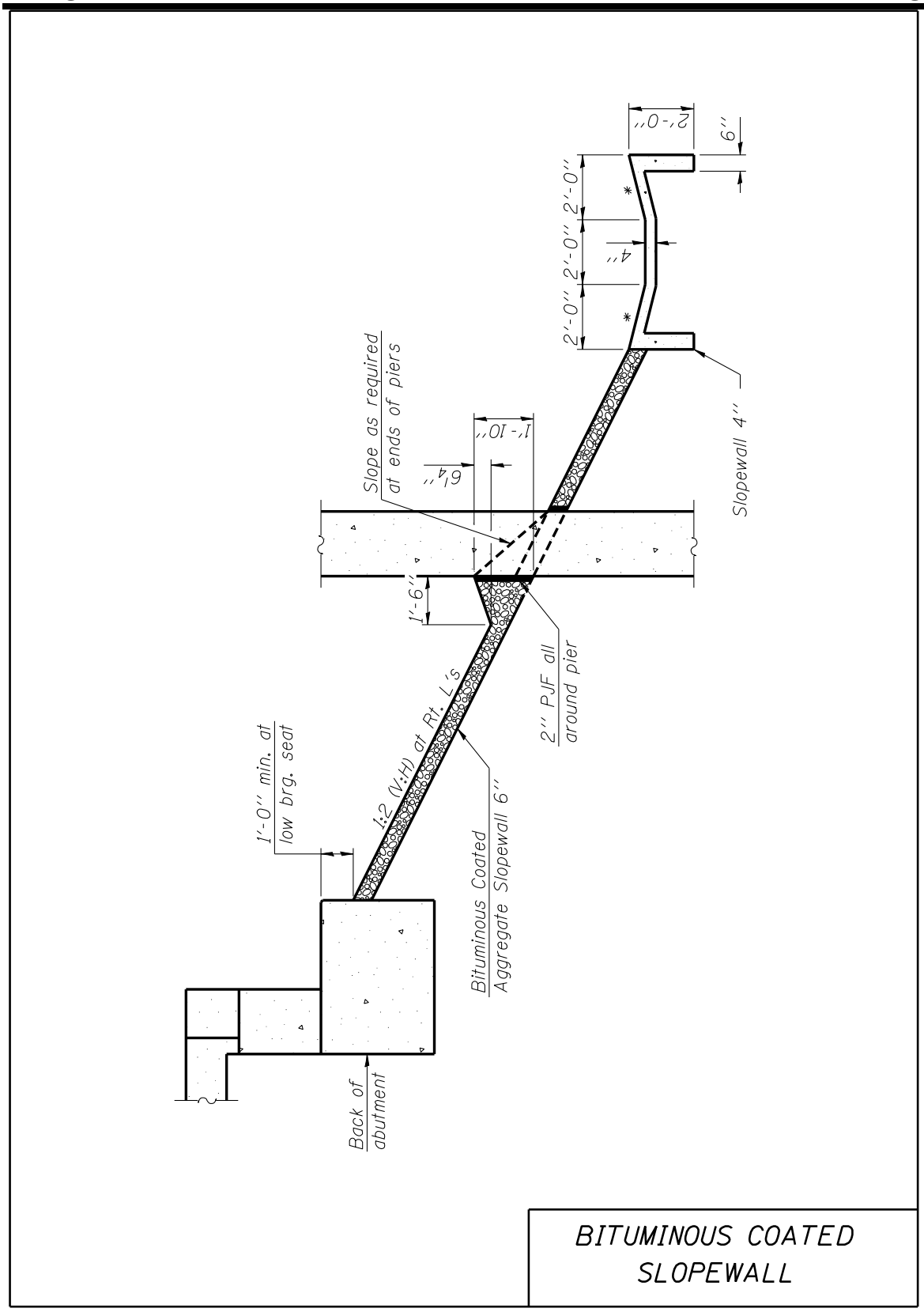

Figure 3.14.4.2-1

3.14.5 Slope Protection Systems (Stream Crossing)

Typically, stone riprap is used for the protection of embankments of structures which cross streams. See Section 2.3.6.3.3 for riprap treatments at toes and flanks as well as proper layer thicknesses and dimensions for each class of riprap.

Concrete slopewalls may be used to solve specific protection problems. The minimum thickness for a paved concrete slopewall subject to stream flow shall be 6 in. and it shall be reinforced the same as grade separation slopewalls. The toe of the slopewall shall be detailed at a constant elevation.

The layout of a slope protection system will generally be as detailed in Figure 2.3.6.3.3-1. Figure 3.14.5-1 deals with specific details for a paved concrete slopewall at a stream crossing.

The top of the slope protection may terminate at 2 ft. – 0 in. above high water.

At stream crossings only, the following note shall be placed on the plans (repeated from Section 3.1.3):

> *Layout of the slope protection system may be varied to suit ground conditions in the field as directed by the Engineer.*

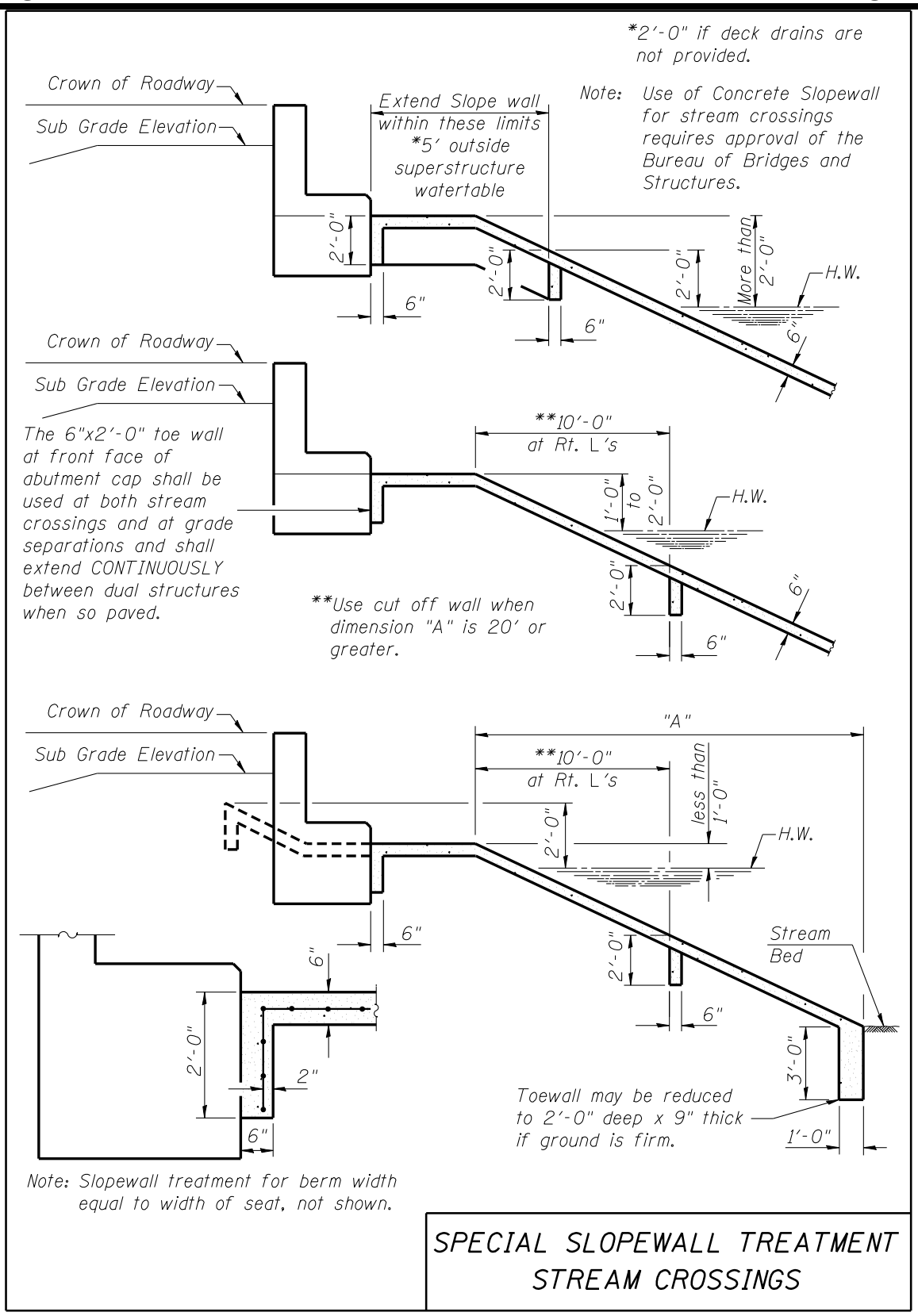

Figure 3.14.5-1

3.15 Seismic Design

3.15.1 Introduction

LRFD and LFD

The Department's primary objective when designing bridges to resist earthquake loadings (and other extreme event loading cases) is loss of span shall be prevented. Span loss equates to potential loss of life during a significant or moderate seismic event. However, damage to a bridge, which could be significant during an earthquake is expected and explicitly designed for. In order to achieve a balance between the prevention of loss of life or span and the practical reality of economics, the Department has devised a straightforward strategy for the seismic design of bridges in Illinois. The seismic design strategy for the State can also be termed a general plan or framework for Earthquake Resisting Systems (ERS's). There are several variations in the specifics of the plan which primarily depend upon bridge type.

The Department's ERS framework was primarily developed based upon seismic design provisions, options and concepts outlined in the LRFD Code (but is also applicable to bridges retrofitted or designed according to the LFD Code). Some minor modifications of the LRFD Code and recommendations from the AASHTO Guide Specifications for LRFD Seismic Bridge Design, which are described below in more detail, are also incorporated into the ERS plan to accommodate bridge configurations and construction methods that are typical for Illinois.

In the discussions below, it is relevant to note that many of the basic or "core" seismic provisions and concepts in LRFD and LFD are fairly similar even though the design return period earthquakes in the two Codes, 1000 yrs. and 500 yrs., respectively, are quite different. There are two important differences between LRFD and LFD which are singled out in order to avoid potential confusion in subsequent sections because both are referred to. One is notational and the other is organizational. The well known Seismic Performance Categories A to D in the LFD Code have been renamed as Seismic Performance Zones 1 to 4 in LRFD. The Categories in LFD and Zones in LRFD are still analogous, though, because they represent differing levels of accelerations and requirements a structure shall be designed for. Organizationally, Division I-A comprises the seismic provisions for LFD design while in LRFD the seismic provisions are interspersed throughout the specifications.

LRFD and LFD

New bridges on the State System and, as appropriate, new bridges on the Local System shall be designed according to the LRFD Code for the 1000 yr. design return period earthquake (or a 7% probability of exceedance in 75 yrs.). Design accelerations shall be computed using the method found in Section 3 of the LRFD Code. The full suite of 1000 yr. acceleration contour maps for Illinois can be found in Section 3 of the LRFD Code. Derived approximate acceleration contour maps which include the effects of Soil Site Class for a 0.2 sec. period are given in Section 2.3.10. These derived maps should primarily be used for planning purposes to assist in the determination of Seismic Performance Zone. Seismic Performance Zones (SPZ) are delineated according to Table 3.15.2-1 which is a reprint of Table 3.10.6-1 from the LRFD Code. See also Design Guide 3.15 for further information on the calculation of a 1000 yr. design earthquake response spectrum and the determination of SPZ.

For the 500 yr. earthquake design event, the AASHTO LFD Specifications shall be used to determine the design acceleration as well as the Seismic Performance Category for a bridge. This includes the acceleration from rock contour map (and not maps available from the United States Geological Survey dated after 1988; see also Figure 2.3.10-5), the methods for determining design accelerations, and the acceleration boundaries for determining Seismic Performance Category which can be found in Division I-A of the LFD Code.

New bridges on the Local System which are not designed according to the LRFD Code shall be designed for the 500 yr. design return period earthquake according to the LFD Code.

When feasible, bridges which are rehabilitated or reconstructed should, at a minimum, meet the requirements of the LFD code for the 500 yr. design return period earthquake, and may be required to meet the LRFD Code for the 1000 yr. design event (especially on the Interstate System). However, there are many factors which contribute to the level of seismic retrofitting which would be required for any particular project. Further guidance on the required level of conformance to the Department's ERS Strategy for rehabilitated or reconstructed bridges can be found in Sections 2.1.2, 2.3.10 and 3.15.7.

LRFD Seismic Performance Zones
for 1000 yr. Design Return Period Earthquake

SPZ	$S_{D1} = F_vS_1$ (1 Sec. Accel.)
1	$F_vS_1 \leq 0.15g$
2	$0.15g < F_vS_1 \leq 0.30g$
3	$0.30g < F_vS_1 \leq 0.50g$
4	$0.50g < F_vS_1$

Table 3.15.2-1

The vertical live load for seismic design shall be taken as zero (0) for most all bridge projects. This applies to both the LRFD and LFD Specifications for all Zones and Categories, respectively.

3.15.3 Earthquake Resisting Systems - General

LRFD and LFD

3.15.3.1 Description

The basic IDOT philosophy for seismic bridge design is to allow certain levels of damage or element failures to occur at planned locations in a structure during an earthquake which will not cause a loss of span. Optimally, this is achieved through what can be termed as levels of seismic structural redundancy which dissipate seismic energy in key parts of bridges in succession as they fail and alter the response of the structure. The lowest level of redundancy is the “weakest link” or “lowest amperage fuse” in a bridge while successive levels are stronger links or fuses which do not have to resist the full energy of an earthquake.

The first fuse location in a bridge where damage is allowed to occur, i.e. the “weakest link”, is at the connections between the superstructure and the substructure. These connections shall only be designed to carry a nominal lateral force (percentage of seismic base shear) without regard to other potential failure modes. The nominal lateral force is determined as 20% of the dead load reaction (R-Factor = 1.0) for Seismic Performance Zones 1 to 4 (LRFD) or Seismic Performance

Categories A to D (LFD) and is independent of design earthquake return period. See Section 3.7.3 for details. Once the first fuse is "blown", the seat widths at supports in both the transverse and longitudinal directions shall be adequate to prevent a span from falling. Adequate seat widths (support lengths) are the second tier of seismic redundancy in the Department's ERS plan.

Once the superstructure has broken away from its connection to the substructure on one or more of its supports, the fundamental period of the bridge will, in all likelihood, increase and lateral seismic load will be transmitted to the substructure primarily through friction. If the structural period increases, the seismic energy and base shear typically decrease. Even if the structural period is not significantly increased after the connection between the superstructure and substructure fails, there could be parts of the superstructure that "go plastic" or buckle which will also help dissipate seismic energy. Bracing between steel girders in superstructures is an example. This type of damage to the superstructure is allowed according IDOT's ERS strategy.

Seismic design of the substructures and foundations of a bridge encompass the third tier of seismic redundancy in IDOT's general ERS plan. The "amperage level" of these fuses is somewhat higher than that of the first and second tier fuses. Generally, substructure types which have the capacity to form a plastic hinge without causing a span to collapse in combination with foundations which remain elastic during a significant seismic event are optimal. The best example of this would probably be a bridge with multiple round column bents and steel H-pile foundations for both the piers and abutments. However, there are examples of bridge types throughout the State which are not of "optimal seismic configuration". Strategies have been developed to help deal with these cases in the Department's ERS plan.

For a 1000 yr. design return period earthquake, IDOT's basic seismic design philosophy concerning substructures and foundations can be stated thus for typical bridges:

> *Once the first and second tier seismic redundancies have been fully engaged, the third tier will adequately resist a significant portion, but not all, of the original seismic energy transmitted to a bridge during an earthquake.*

3.15.3.2 Range of Applicability

The Department's ERS design strategy or plan is generally intended for "regular" Illinois bridges which can be designed assuming the first mode of vibration is the dominant response to a seismic

loading. However, bridges which are "irregular" can and should still be designed according the general principles of IDOT's ERS plan. These structures will usually require multi-modal analysis and may require some design and/or detailing techniques which are beyond the scope of this manual.

The definitions of regular bridges for seismic design in Illinois are given in LRFD Table 4.7.4.3.1-2 of the AASHTO LRFD Specifications, and for LFD they are given in Division I-A Table 4.2B. Regular bridges are defined the same regardless of design earthquake return period, 1000 or 500 yrs. Generally, bridges are regular if there are 2 to 6 spans (single span bridges are always regular), do not have span length ratios which are significantly large, do not have pier stiffness ratios which are significantly large, and are not overly curved. Multi-unit bridges, i.e. those structures with at least two distinct sets of continuous spans which share at least one simple support at a pier, are considered irregular by the Department and require multi-modal analysis in Zones 2, 3 and 4 (or SPC B, C and D).

Most all bridges on the State System and many on the Local System should be classified as "Essential". Some Local Bridges may be classified as "Other". Very few bridges should be classified as "Critical". Division I-A Table 4.2A in LFD allows single (or first) mode analysis for all regular bridges (Essential and Other) in SPC B, C & D, while LRFD Table 4.7.4.3.1-1 prescribes that multi-modal analysis is required for regular bridges classified as Essential in Zones 3 and 4. For regular bridges classified as Other in Zones 2, 3 & 4 and regular bridges classified as Essential in Zone 2, only a single mode analysis is required according to LRFD. IDOT, however, generally does not require multi-mode analysis of regular bridges classified as Essential in Zones 3 & 4. A single mode analysis for a regular bridge in Illinois is typically more than adequate for design purposes, regardless of Seismic Zone, unless the shape of the computed first mode in the transverse direction does not reasonably resemble a half sine wave.

The methods and strategies of the Department's ERS plan presented in subsequent sections are intended to be applicable to all Seismic Zones and Categories regardless of the design earthquake return period, 1000 or 500 yrs.

Major and/or critical bridges in highly seismic regions of Illinois are typically designed for an earthquake return period of 2500 years. As such, they require the highest level of sophistication in their planning and design for seismic effects and are beyond the scope of this manual. The design methods and provisions of the AASHTO Guide Specifications for LRFD Seismic Bridge

Design should be considered for the design of major and/or critical bridges. This guide specification encompasses a "displacement based" design approach which may be appropriate for these bridges as well as some which are not considered major and/or critical structures in far Southern Illinois (SPZ 4). Consult the BBS if there is a question as to whether the AASHTO Guide Specifications for LRFD Seismic Bridge Design should be considered for a particular project.

If a temporary bridge, expected to be in service for less than five years, is required for a project which lies in a region of moderate to high seismicity, it should typically be designed as per Section 513 of the IDOT Standard Specifications for Road and Bridge Construction.

3.15.4 Earthquake Resisting Systems - Specifics

LRFD and LFD

The subsections below present an overview of the design considerations and details which are required to implement the Department's general ERS plan for specific situations. It is well acknowledged that seismic design can be somewhat of an intuitive form of structural engineering lacking in precise numerical solutions. This is reflected in the provisions of the current AASHTO Specifications. The Department's detailed concept of tiered seismic redundancy is intended to aid bridge designers in producing designs capable of achieving a consistent level of seismic resistance.

When used in conjunction with the relatively simple dynamic and static analysis techniques given in Section 3.15.4.3, Section 3.15.6 and Design Guide 3.15; the prescribed practices given in Sections 3.15.4.1, 3.15.4.2 and 3.15.5 concerning the detailing of superstructure to substructure connections, seat width (support length) requirements, and the detailing of columns, walls and foundations should produce a reasonably high probability that span loss is prevented during a moderate or major earthquake.

All single span bridges, and multi-span bridges located in Seismic Performance Zone (SPZ) 1 with $S_{D1} < 0.10$ or Seismic Performance Category (SPC) A are only required to implement Sections 3.15.4.1 and 3.15.4.2 to fulfill the Department's ERS strategy due to their lower seismic risk. Multi-span bridges in SPZ 1 with $S_{D1} \geq 0.10$ and $S_{D1} \leq 0.15$ shall meet the requirements of the sections noted directly above as well as the minimum requirements (without seismic force analysis) for the detailing of plastic hinge regions in concrete members according to Articles

5.10.11.4.1d and 5.10.11.4.1e of the LRFD Code with the exception that the maximum spacing of confinement reinforcement shall be 6 in. These requirements in LRFD were added in 2008 because the design accelerations for the upper portion of SPZ 1 are similar to the previous SPZ 2 when the design earthquake return period was 500 yrs. Increased embedment of piles into caps and footings is also required. The concepts and figures presented in Section 3.15.5 should be used as a guide for meeting the minimum detailing requirements of the upper portion of SPZ 1.

3.15.4.1 Superstructure to Substructure Connections: Level 1 Redundancy

Section 3.7.3 presents the details for designing the "nominal" or "fuse" connections between the superstructure and substructure for elastomeric and fixed bearings. Side retainers are thought of as part of this connection or fuse. The lateral earthquake design force for the connections, as prescribed in Section 3.7.3, is 20% of the dead load reaction of the superstructure (R-Factor = 1.0) at each support regardless of the SPZ or SPC or earthquake return period.

The methodology for the determination of the lateral design forces is the same for bridges with either prestressed concrete I-beam superstructures or steel superstructures. IDOT standard drawings for prestressed concrete construction along with Departmental Base Sheets present the majority of the details for the connections between the superstructure and substructures of PPC I-beam bridges. Side retainers, anchor bolts and pintles used for bearings on prestressed concrete I-beams and bulb-T's shall all also be designed according to Section 3.7.3. At fixed piers, the IDOT standard side retainer details for prestressed concrete fascia beams shall still be specified due to constructability reasons but shall be neglected in calculating seismic resistance. The #8 dowel bars used to connect the diaphragm to the cap beam at fixed piers shall be designed using Figure 3.4.10-4.

There are no special seismic detailing requirements for superstructure to substructure connections for integral abutments with either steel or prestressed concrete superstructures.

There are no special seismic detailing requirements for superstructure to substructure connections for slab bridges.

Concrete deck beam bridges shall use the standard details found in Section 3.5. These details are sufficient for all deck beam bridges regardless of span length or beam size.

3.15.4.2 Support Lengths: Level 2 Redundancy

In lieu of using the below equation to obtain an exact seat width or support length requirement, the values found in Table 3.15.4.2-1 may be used for all bridges, regardless of return period or location. The values presented in the table for the 1000 yr. event were calculated using the required seat width equation recommended by the NCHRP 12-49 project. The equation is more conservative than that of the LRFD Code and exhibits greater compatibility with Illinois' ERS strategy. The values in the table may be more conservative than those obtained by use of the below equation. For the 500 yr. event, the values in Table 3.15.4.2-1 reflect the seat widths calculated according to the current LFD Code. Pier heights of 25 ft. (which includes crashwall and cap beam, top of pier to depth-of-fixity in soil, etc. as appropriate) and a skew of 30° were used to generate the table. Other assumptions are listed in the footnotes. For more precise determinations or for structures beyond the limits assumed for Table 3.15.4.2-1, required seat widths shall be calculated. The equations for determining required support length for the 500 yr. design return period earthquake can be found in Division I-A of the LFD Code. For the 1000 yr. event, required support width, N in in., should be calculated with the equation below.

$$N = \left[3.94 + 0.0204L + 0.084H + 1.087\sqrt{H}\sqrt{1+\left(2\frac{B}{L}\right)^2} \right] \frac{1+1.25F_vS_1}{\cos\alpha} \qquad (3.15.4.2\text{-}1)$$

Where:

L	=	Typically the length between expansion joints (ft.).
H	=	Height of tallest substructure unit between expansion joints, including units at the joints (ft.).
B	=	Out-to-out width of superstructure (ft.).
α	=	Skew angle (°).
F_vS_1	=	One second period spectral response coefficient modified for Site Class.
B/L	=	Not to be taken greater than ⅜.

The required seat width, N, is measured along the beam from the edges of piers or abutments to the end of the beam in the longitudinal direction. In the transverse direction, N is measured from the edges of piers or abutments to the centerline of the fascia beam. According to the AASHTO LRFD and LFD Codes, only the longitudinal seat widths are required to be provided. However,

to implement the Department's ERS strategy, both directions shall be provided with adequate seat widths such that the superstructure has enough room to "ride out" an earthquake on its supports once the bearings and their connections fail.

Seat Width Requirements at Piers and Abutments*						
Length (Exp. Joint to Exp. Joint) (ft.)	500 yrs.		1000 yrs.			
	LFD Cat. A & B N Req. (in.)	LFD Cat. C & D N Req. (in.)	LRFD Zone 1 N Req. (in.)	LRFD Zone 2 N Req. (in.)	LRFD Zone 3 N Req. (in.)	LRFD Zone 4 N Req. (in.)
L ≤ 100	13	20	20	24	28	32
100 < L ≤ 200	16	23	23	27	32	37
200 < L ≤ 300	18	27	26	30	36	41
300 < L ≤ 400	20	30	29	33	39	45

*Notes:
1. Piers Heights ≤ 25 ft.
2. Skew Angle ≤ 30°
3. B/L Ratio of 0.375
4. F_vS_1 at Upper Zone Boundary for Zones 1 to 3
5. F_vS_1 = 0.7 for Zone 4

Table 3.15.4.2-1

For single span bridges, L is the span length of the structure. (There are no seat width requirements if the abutments are integral for single span structures.) For continuous multi-span integral or semi-integral abutment bridges, the required seismic seat widths at piers in the transverse direction may be divided by one and one-half (1½) with no seat width requirements at the abutments. Approach pavements are not included in the length of the structure for integral or semi-integral abutment bridges. The added stiffness provided by the combination of integral abutments and the superstructure allows this reduction. For piers supporting prestressed precast concrete I and Bulb-T beams, regardless of abutment type, the overall pile cap width may be limited to 48 in.

There are no special seismic seat width requirements for slab bridges.

There are no special seismic seat width requirements for deck beam bridges. The standard anchor rods provide a resistance much greater than that required to assume fuse behavior. As the rods cannot reasonably be expected to fuse, the connection need not satisfy minimum seat width requirements in any direction.

3.15.4.3 Substructures and Foundations: Level 3 Redundancy

Response Modification Factors (R-Factors) for seismic design are given in LRFD Table 3.10.7.1-1. In LFD, they are presented in Table 3.7 of Division I-A. Typically, R-Factors are only applied to elastic design moments from an equivalent static earthquake analysis. Guidance on the design of typical substructure and foundation configurations is given below. Included are R-Factors and ϕ factors to employ as well as suggested general analysis techniques. Seismic detailing requirements and other guidance are given in Sections 3.15.5 and 3.10. Note that the R-Factors given below are based upon typical bridges in Illinois being classified as "Essential" (Importance Category) in LRFD. Some local bridges may be classified as "Other". See Section 3.15.8 for further information. Generally, most bridges in Illinois would not be classified as "Critical". The BBS should be contacted if there is a question about a bridge's Importance Category.

3.15.4.3.1 ϕ Factors

For a 1000 yr. design return period earthquake, an LRFD extreme event load case, it is permissible to use the full resisting nominal capacity of certain elements to achieve practical and economical designs that will satisfy the Department's primary objective of preventing span loss. Columns, walls, and drilled shafts may be designed with a ϕ factor of 1.0 for axial force and moment. The geotechnical resistance factor (ϕ) for pullout of piles in tension may also be set to 1.0 for the 1000 yr. design return period earthquake. The use of these higher ϕ factors is considered acceptable based upon the amount of damage permissible to the Department for a seismic event and the level of isolation anticipated between the superstructure and substructure as a result of Level 1 of the ERS framework. For shear, a ϕ factor of 0.9 should be used for columns and walls (as is currently specified in the LRFD Code and should also be used for LFD), and drilled shafts.

For the 500 yr. design event, ϕ factors as stipulated in LFD (with the exception of that mentioned above for shear) should be used as design accelerations are low enough that increased ϕ factors are not necessary to achieve economical or practical designs for typical structures.

3.15.4.3.2 Foundation Issues

The pile design table provided in the Structure Geotechnical Report (SGR) should provide the geotechnical factored or allowable resistances available under axial compression for seismic

loadings. For LRFD, the geotechnical extreme event resistance factor for pile strength is 1.0. For ASD, the nominal (or unreduced) pile resistance should be used.

The simplest (and most conservative) method to convert the tabulated factored or allowable resistances available for non-seismic pile design to seismic pile design is to multiply the non-seismic design values by 2.0 for LRFD or 3.0 for Allowable Stress Design. This method, however, amplifies the effect of the downdrag loading which may be included in the determination of geotechnical resistance. It is more accurate to only amplify the required bearing and geotechnical losses. Conversion by either method is acceptable.

Even though seismic loads may govern the design of the foundation, the factored or allowable resistances available reported on the Contract plans should not be based upon the seismic resistances. The factored or allowable resistances available reported on the Contract plans should be based upon the geotechnical factored or allowable resistances reported in the SGR for non-seismic loadings.

When there is a potential for liquefaction at a bridge site, the guidance provided below should still generally be adhered to although some modifications, depending on the severity to which the soil has the potential to liquefy, may be required. As noted in Section 2.3.10, the potential for liquefaction shall be evaluated for all projects according to the requirements of their SPC or SPZ. See also Section 3.10 for further guidance.

3.15.4.3.3 Circular and Trapezoidal Column Bents with Cap Beam, Crashwall, Footing and Piles

This substructure and foundation combination is considered optimal in regions of moderate to high seismicity by the Department as any plastic deformation that may occur due to an earthquake is typically above ground and “inspectable”. The columns will theoretically form plastic hinges just above the crashwall and just below the cap beam if detailed properly. An R-Factor of 3.5 should be used for the flexural design of the columns. The piles and crashwall (for bending about the weak axis at the wall-footing interface) may be designed for the lesser of R/2 for Zone 2, the full elastic base shear force (R = 1.0) for Zones 3 and 4, or the shear required to cause the columns to form plastic hinges.

For a 1000 yr. design earthquake, the effective moment of inertia of the columns should be taken as half of the gross moment of inertia (i.e. cracked). If the design return period is 500 yrs., the gross moment of inertia of the columns should be used.

The piles, either H-piles or metal shell, are typically assumed to deform in reverse curvature (longitudinally and transversely) for analysis and design purposes with the length from the depth-of-fixity to the bottom of the footing serving as the "column height." H-piles are considered optimal in regions of moderate to high seismicity.

3.15.4.3.4 Solid Wall and Hammerhead Bents with Footing and Piles

For analysis and design purposes in the transverse direction, solid walls should be considered as very stiff shear walls or "rigid links" to the weaker (more flexible) piles. In the longitudinal direction, they should be modeled and designed as cantilevers. The weak link (fuse, plastic hinge) should be designed to occur in the wall just above the footing and not in the piles. In the transverse direction, An R-Factor of 1.0 should be used for design of the wall while an R-Factor of 1.5 is appropriate for the designing the wall in the longitudinal direction. The piles may be designed for the full elastic base shear force (R = 1.0) or the shear required to cause plastic hinging in the wall stems.

The design of hammerhead piers can be somewhat different than that of a solid wall which spans the full transverse width of the superstructure. Because of the narrower width of the stem inherent to hammerhead piers, the axial stresses in the stem (particularly at the top of the stem or base of the "hammerhead") may be considerably higher than for a conventional wall type pier warranting it to be designed as a compression member subjected to biaxial bending. An R-Factor of 1.5 may be used for the stem for both the longitudinal and transverse directions. The piles should be designed according to that prescribed above for wall solid wall piers.

For a 1000 yr. design earthquake, the effective moment of inertia of the wall or stem in the longitudinal direction should be taken as half of the gross moment of inertia (i.e. cracked). If the design return period is 500 yrs., the gross moment of inertia of the wall or stem should be used.

3.15.4.3.5 Individually Encased and Solid Wall Pile Bent Piers

The seismic design and analysis methods for individually encased pile bents and solid wall encased pile bents are very similar. Individually encased bents, however, are more flexible than solid wall bents in both the transverse and longitudinal directions. The theoretical plastic hinges for both types can tend to form in areas which are not readily inspected after an earthquake has occurred. As such, they should be designed with an R-Factor of 2.0 for both the longitudinal and transverse directions.

3.15.4.3.6 Drilled Shaft Piers

There are five basic types of drilled shaft piers typically built in Illinois. These are individual column drilled shaft bents, solid wall encased drilled shaft bents, individual column drilled shaft bents with web walls, individual column drilled shaft bents with crashwall, and drilled shaft bents with transfer beam (Base Sheets P-DS, P-DSSW, P-DSWW, P-DSCW, P-DSTB).

For a 1000 yr. design earthquake, the effective moment of inertia of the columns and/or shafts, as appropriate, should be taken as half of the gross moment of inertia (i.e. cracked). If the design return period is 500 yrs., the gross moment of inertia of the columns and/or shafts should be used.

For individual column drilled shaft bents, plastic hinges may theoretically occur in the drilled shaft portion of the pier (i.e., below ground) which may not be inspectable. Consequently, an R-Factor of 2.0 should be used when designing this pier type. If analysis shows that plastic hinges are likely to form above ground, an R-Factor of 3.5 may be used.

Solid wall encased drilled shaft bents (P-DSSW) are likely to develop plastic hinges below the ground line. As such, an R-Factor of 2.0 should be used for design.

Individual column drilled shaft bents with web walls (P-DSWW) are expected to behave similar to solid wall encased drilled shafts (P-DSSW). The upper web walls, because they are connected to the columns, will behave like a semi-rigid wall In the longitudinal direction, the stiffness of the lower web walls should be ignored since they are not connected to the shafts but should be considered in the transverse direction as they will inherently restrain deflection of the shafts. An R-Factor of 2.0 is recommended for this pier type as it is anticipated that plastic hinges will occur in areas that are not readily accessible. However, a value of 3.5 is also acceptable if the analysis shows that plastic hinges are likely to develop near the base of the upper web walls.

Individual column drilled shaft bents with crashwalls (P-DSCW) or transfer beams should be analyzed and designed similar to multiple column bents with footings, crashwalls and piles. An R-Factor of 3.5 should be used for the column design. An R-Factor of 1.0 should be used for flexural design of crashwalls and transfer beams. The designer should investigate whether it is possible for plastic hinges to form in the drilled shafts (below ground) due to seismic loadings in both the transverse and longitudinal directions. The drilled shafts should be designed with enough strength to ensure that the plastic hinges form above the crashwall or transfer beam.

In any of the above cases involving a column in the upper portion and a drilled shaft in the lower portion of the pier, it is also permissible to design the drilled shafts for the forces corresponding to plastic hinging of the columns to achieve economical and practical designs.

3.15.4.3.7 Abutments

The foundations of abutments should typically be designed for the full elastic base shear (R = 1.0). The passive pressure of the soil bearing against the abutment and wingwalls may be utilized at the designer's discretion.

3.15.5 Overview of Seismic Detailing Requirements for Substructures and Foundations

LRFD and LFD

An overview of seismic detailing requirements for substructures and foundations is given in this section. There are no special seismic detailing requirements for prestressed concrete and steel superstructures according to the Department's ERS plan. Detailing requirements for the connections of the superstructure to the substructures are given in Section 3.7.3. Seat width requirements are given in Section 3.15.4.2.

LRFD Article 5.10.11 contains a number of detailing and design provisions for reinforced concrete members. Corresponding articles in the Standard Specifications Div. I-A are 6.6 and 7.6. These should also be referenced for further guidance.

3.15.5.1 Circular and Trapezoidal Column Bents with Cap Beam and Crashwall

Figures 3.15.5.1-1 through 3.15.5.1-4 illustrate the types of special seismic details required in columns, caps beams and crashwalls for circular and trapezoidal column bents. The areas in and around where plastic hinging will occur in columns are termed "seismic critical". Plastic hinges will form at the top and bottom of columns just below the cap beam and just above the crashwall. Shear and confinement reinforcement is required to be carefully detailed in these seismic critical areas. Lap splicing of spiral and longitudinal reinforcement is typically prohibited anywhere within the columns but may be allowed in special circumstances with the approval of the BBS. When splicing of bars is necessary, they shall preferably be mechanically spliced. Mechanical splices for longitudinal bars shall be staggered according to LRFD Article 5.10.11.4.1f.

Typical grade separation structures in IL that utilize such substructure units often have relatively short columns. For detailing simplicity, spiral and tie spacing in these circular and trapezoidal columns should typically be constant. The governing center-to-center design spacing should be that required for confinement at plastic hinging regions. Tie and spiral spacings should not be less than 3 in. nor greater than 6 in. center-to-center. Bar sizes greater than #5 (for ties or spirals) should be avoided in columns when possible. The 6 in. maximum allowable spacing for spirals and ties is per the AASHTO Guide Specifications for LRFD Seismic Bridge Design and is considered permissible for use with the LRFD and LFD codes. If a spacing less than 3 in. is required, the BBS should be contacted. For taller columns, it is permissible to increase the vertical tie spacing outside of the plastic hinging region to the lesser of the least dimension of the member or 12 in. However, the amount of lateral reinforcement provided by the larger vertical spacing should not be less than 50% of the lateral reinforcement required in the plastic hinging region. Ties within columns should be detailed so that no longitudinal bar is more than 12 in. from a bar restrained by a corner tie within the plastic hinging region or 24 in. from a bar restrained by a corner tie outside of the plastic hinging region. Lateral reinforcement shall be the greater of that amount required for shear strength or the minimum prescriptive detailing requirements that are provided. When investigating shear, it is simplest to determine the required tie or spiral spacing by assuming the concrete has no shear strength (V_c = 0.0).

Spirals and ties shall be extended into cap beams and crashwalls not less than half the largest column dimension or 15 in., whichever is greater. As shown in Figures 3.15.5.1-2 and 3.15.5.1-4, "seismic hoops" are an alternative for shear reinforcement extensions into cap beams and crashwalls for circular columns. The extra 1 ½ turns at the ends of column spirals shall be lap welded together to form an equivalent seismic hoop as a transition. As an alternative, a 135° standard hook into the core at the end of the extra 1 ½ spiral turns may be provided.

For tall columns, splicing of spiral reinforcement may be required for constructibility purposes. Splicing of reinforcement within plastic moment regions is prohibited. Therefore, the plastic moment regions shall be shown as "no splice zones" on the plans to alert the Contractor. See Figures 3.15.5.1-1 and 3.15.5.1-2 for examples.

To ensure that spirals are spliced using equivalent seismic hoops, the following note shall be placed on the plans:

> *When splicing of spiral reinforcement is necessary, the spirals shall be provided with 1 ½ extra turns at the ends to be spliced. These additional turns shall either be welded together according to AWS D1.4, or shall both terminate with a 135° standard hook.*

Because use of seismic details for trapezoidal columns results in difficult detailing and placement of reinforcement, the use of round columns instead of trapezoidal columns in regions of Illinois where seismic detailing is required is strongly encouraged. Regardless, the detailing of ties in trapezoidal columns is illustrated in Figures 3.15.5.1-3 and 3.15.5.1-4. In regions of Illinois where no special seismic detailing is required, pairs of lap spliced U-shaped bars are normally detailed as shear reinforcement in the columns. Figure 3.15.5.1-4 gives an example of how this basic detailing method has been modified and built upon to satisfy confinement and shear strength requirements. U-bars which have 90° standard bends at the ends, a rectangular or square tie in the center of the column, and cross ties which lap across the long (transverse) but do not lap across the short (longitudinal) direction of the columns may all be used in various combinations to meet seismic requirements. More detailed requirements, guidance and illustrations can be found in appropriate articles of the LRFD and LFD Codes.

Complex detailing of confinement reinforcement extending into cap beams and crashwalls for trapezoidal column bents is not required. Only "seismic rectangular hoops" or simple closed hoops with constant dimension are required. No cross ties or U-bars should be specified in these regions as shown in Figures 3.15.5.1-3 and 3.15.5.1-4.

Minimum confinement steel according to Figures 3.15.5.2-1 and 3.15.5.2-2 shall be provided in crashwalls which exceed 6 ft. in height or are similar in height to the columns.

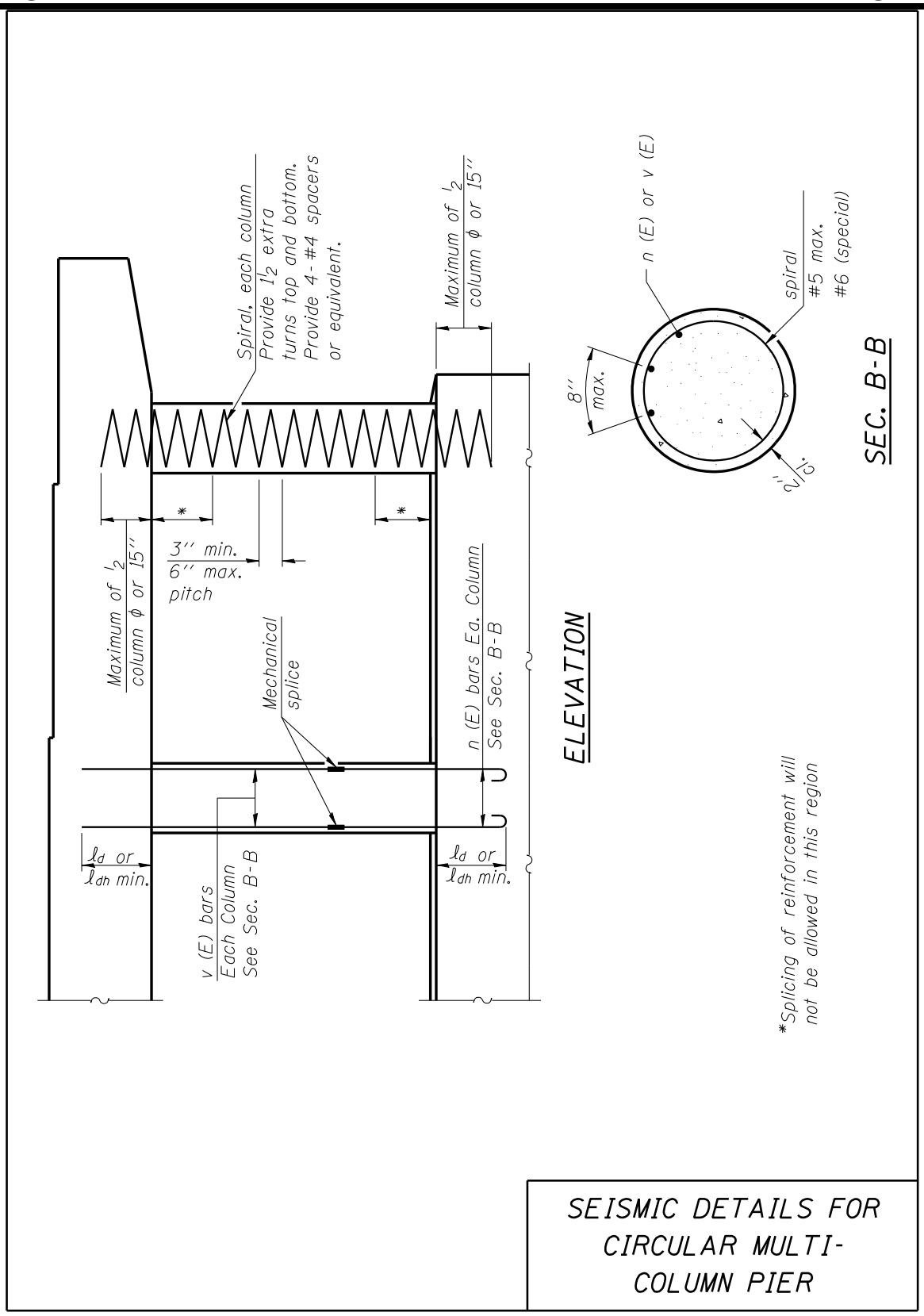

Figure 3.15.5.1-1

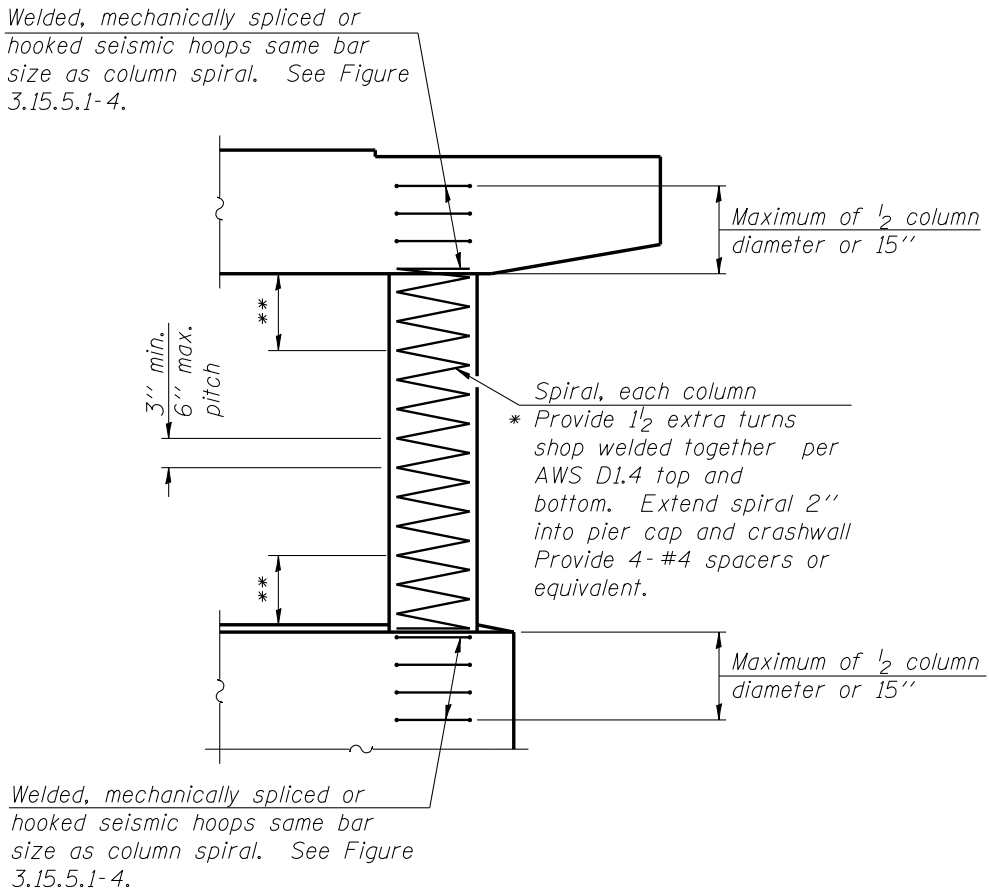

ELEVATION

*Allowable substitution:
Provide 1 1/2 extra turns top and bottom with 135° standard hook into core at ends of spiral

**Splicing of reinforcement will not be allowed in this region

ALTERNATE SEISMIC DETAILS FOR CONFINEMENT OF CIRCULAR COLUMNS

Figure 3.15.5.1-2

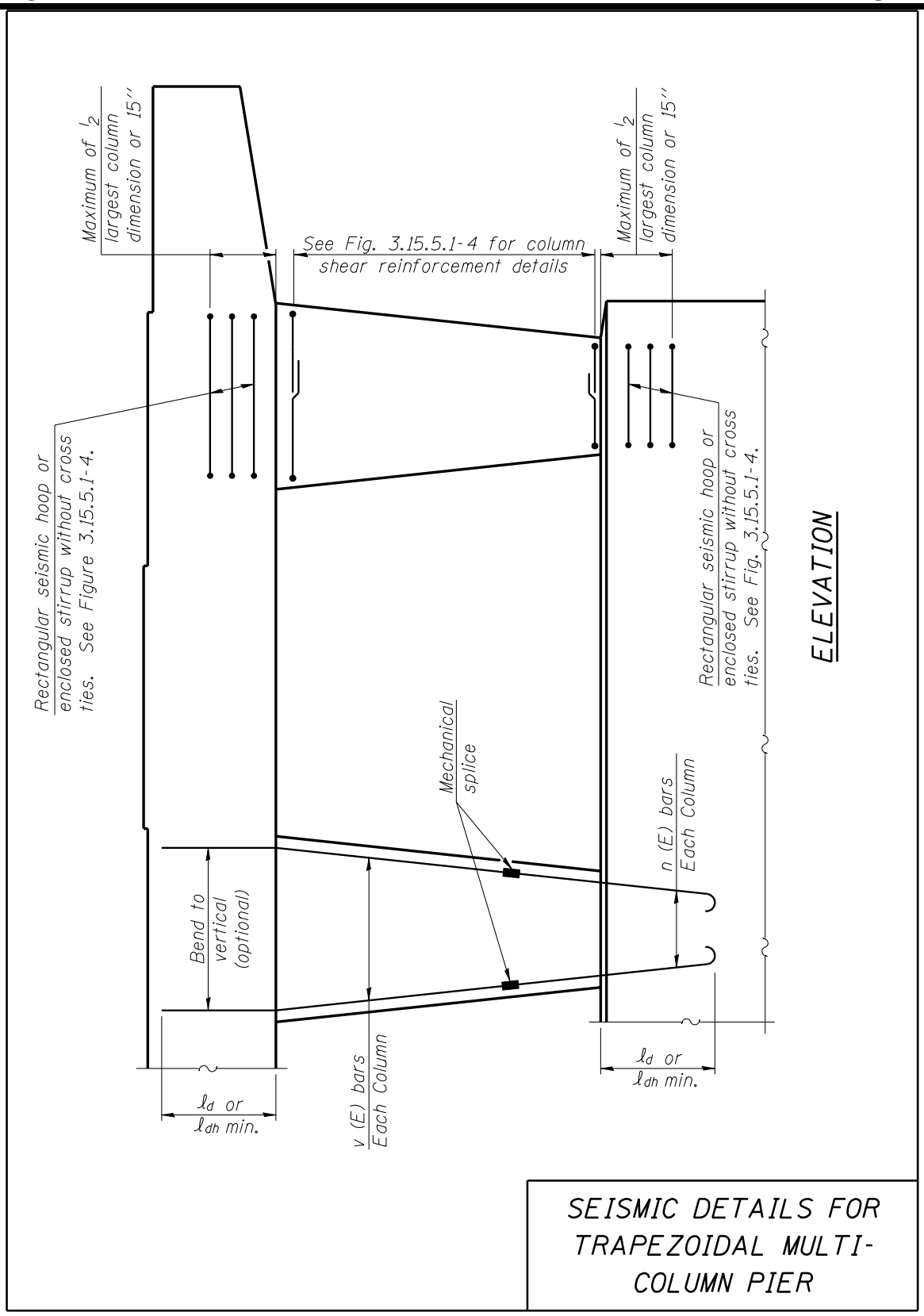

Figure 3.15.5.1-3

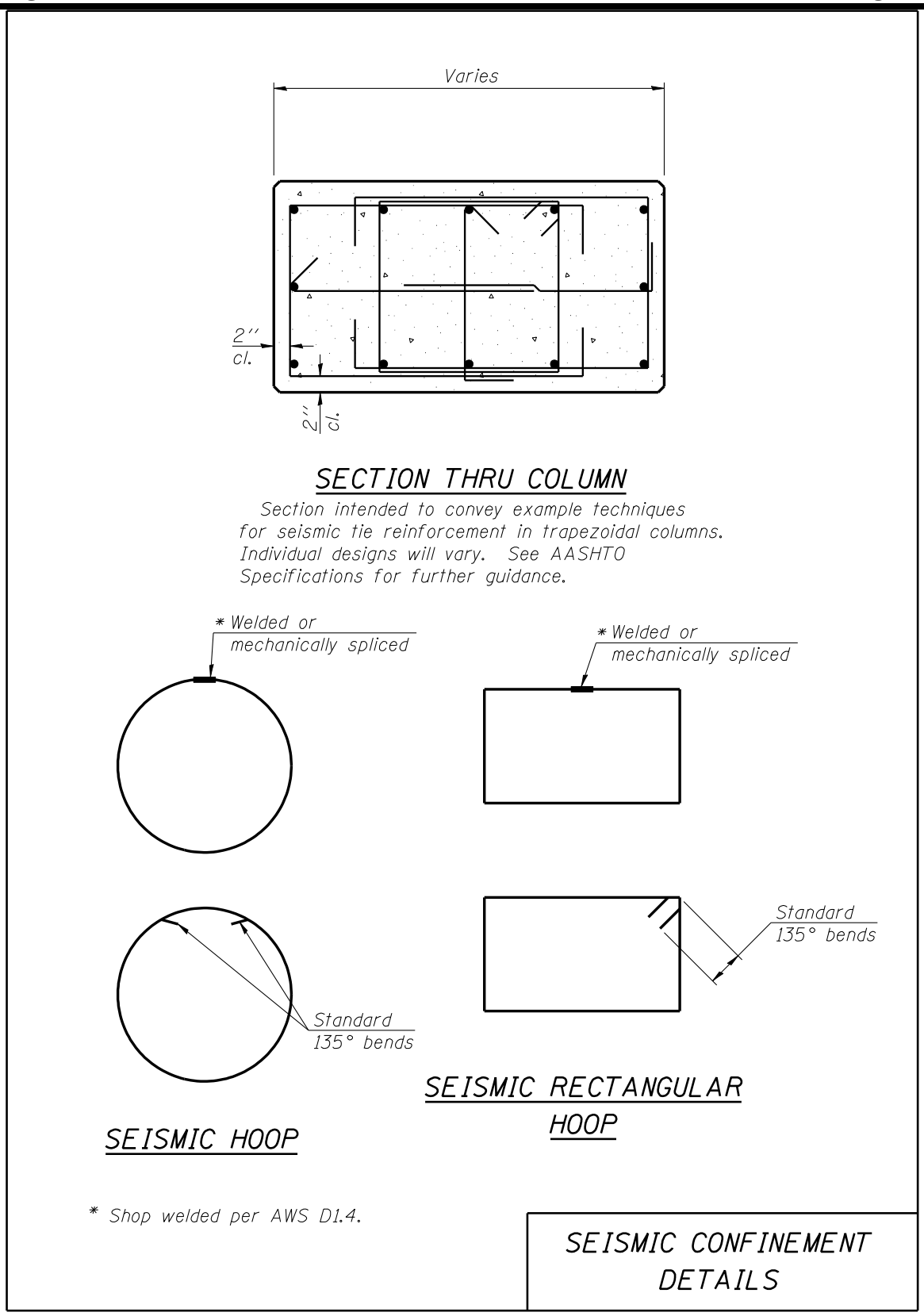

Figure 3.15.5.1-4

Vertical column reinforcement shall extend at least the development length, l_d (not hooked) or l_{dh} (hooked), into cap beams as crashwalls. Hooked bars are preferred by the Department as they provide increased ductility. The provisions for calculating development lengths are similar in LRFD and LFD. When detailing hooked bars, constructibility and bar congestion shall be considered.

3.15.5.2 Solid Wall and Hammerhead Bents with Footings

Figure 3.15.5.2-1 illustrates typical seismic detailing requirements which are applicable to solid wall, modified hammerhead, and hammerhead piers with footings. The focus of the figure is on the primary seismic critical location in and around the wall-footing interface (plastic hinging region). The theoretical plastic hinging region extends from the bottom of the wall to a distance that is at least equal to the thickness of the wall, one-sixth the height of the wall or 18 in., whichever is greater. Lateral reinforcement, in the form of cross ties (typically #3's or #4's) and horizontal perimeter reinforcement, shall be detailed in an arrangement that satisfies the criteria outlined for tied columns in Section 3.15.5.1. In addition, a single layer of cross ties shall be provided across the top layer of footing reinforcement at the same horizontal spacing used for the plastic hinging region of the stem.

Figure 3.15.5.2-2 provides seismic detailing requirements outside of the plastic hinging region and also conceptually illustrates suggested details for staged construction. Similar to that mentioned above, a nominal amount of lateral reinforcement in the form of cross ties and horizontal perimeter reinforcement shall be detailed in accordance with the criteria outlined for tied columns in Section 3.15.1.1 to ensure a nominal amount of ductility outside the plastic hinging region. In addition, perimeter reinforcement shall satisfy the minimum ratio prescribed in LRFD Article 5.10.11.4.2 and LFD Div. I-A Article 7.6.3.

The normal lateral reinforcement around the perimeter of the wall on which the cross ties set should be joined together by mechanical splicers or welding to form a hoop in the plastic hinging region. The maximum bar size should typically be #6. Beyond the seismic critical area, shear reinforcement around the wall perimeter need not be joined by mechanical splicers or welding. Providing at least 90° bends (standard hooks) at the ends of u_1(E) bars pointing towards the wall interior is an acceptable alternative equivalent outside of the plastic hinging region as depicted in Figure 3.15.5.2-2. Staggering splices of horizontal reinforcement is not required.

For staged construction, as shown in Figure 3.15.5.2-2, the horizontal perimeter reinforcement should protrude from the finished Stage I construction in the plastic hinging region near the base of the wall, while the horizontal perimeter reinforcement outside of this region may be spliced conventionally. Designers should review literature from the manufacturers listed on the Department's approved supplier list for mechanical splices in determining how far the bars should protrude from the finished Stage I construction to accommodate an array of possible mechanical splices. Consideration should be given to any possible stage construction clearance issues when investigating the projection length.

When splicing of vertical (longitudinal) bars is necessary, they should be mechanically spliced. Lap splicing of vertical reinforcement in plastic hinging regions is not permitted and is strongly discouraged outside of the plastic hinging region. If lap splices are desired, the BBS should be contacted. Mechanical splices for vertical bars shall be staggered according to LRFD Article 5.10.11.4.1f. Vertical bars shall extend at least the development length, l_d (not hooked) or l_{dh} (hooked), into the footing. For solid walls (where applicable) and modified hammerhead piers, the vertical bars should extend the same development length into the caps which do not have any other special seismic detailing. Hooked bars are preferred by the Department as they provide increased ductility. When detailing hooked bars, constructability and bar congestion shall be considered.

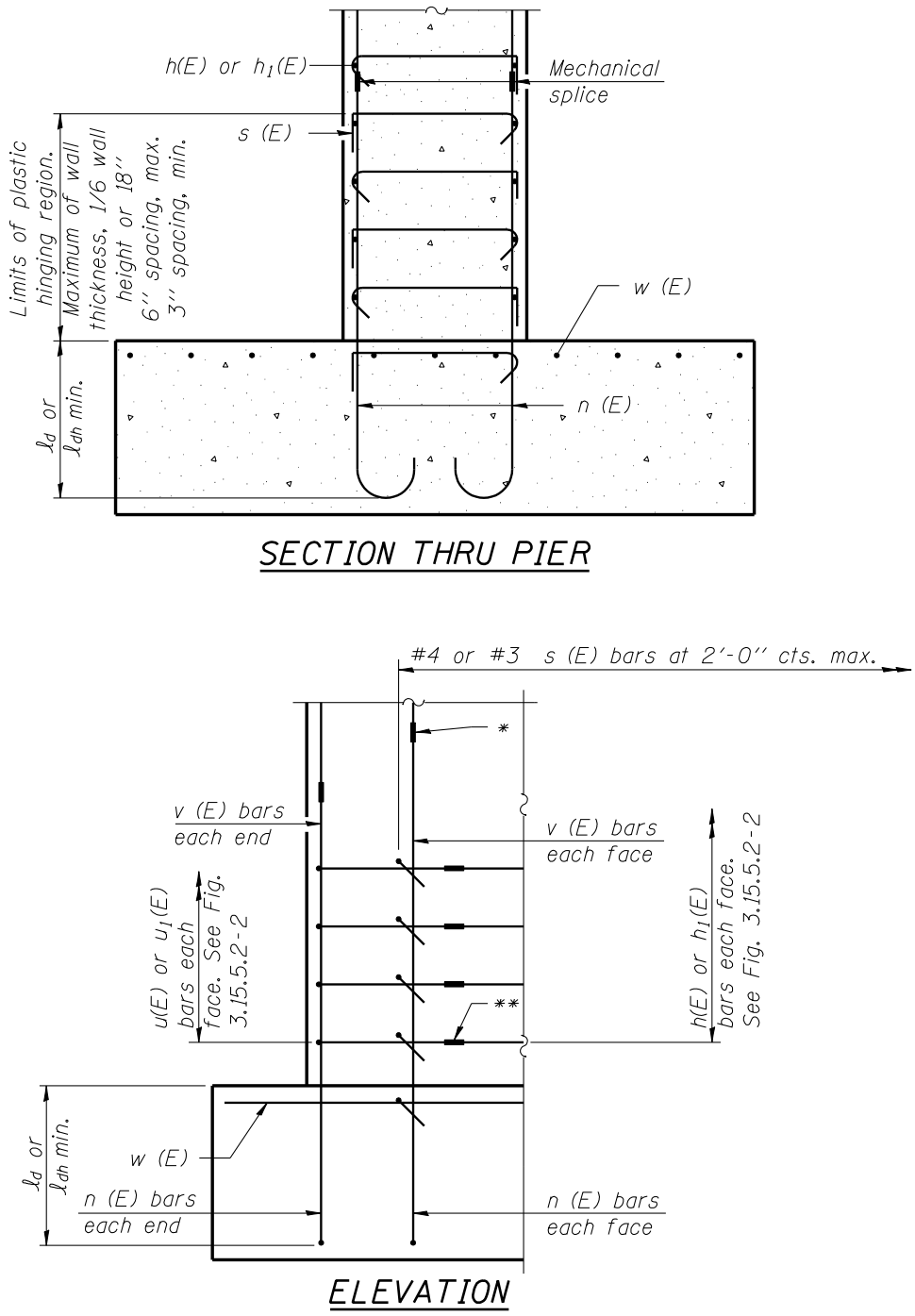

* Mechanical splice

** Mechanical splice or shop welded splice per AWS D1.4.

SEISMIC DETAILS FOR SOLID STEM PIER WITH FOOTING - PLASTIC HINGING REGION

Figure 3.15.5.2-1

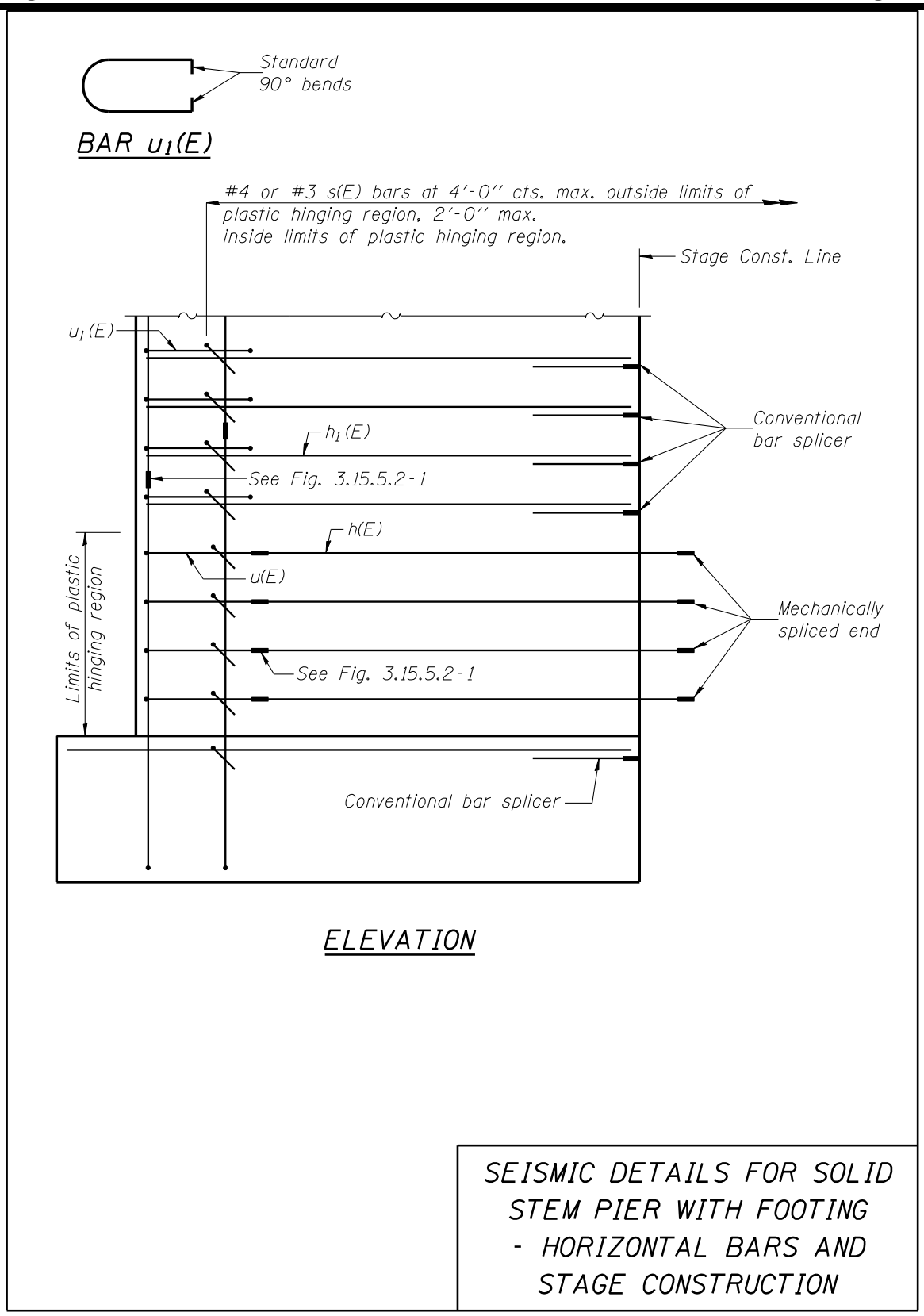

Figure 3.15.5.2-2

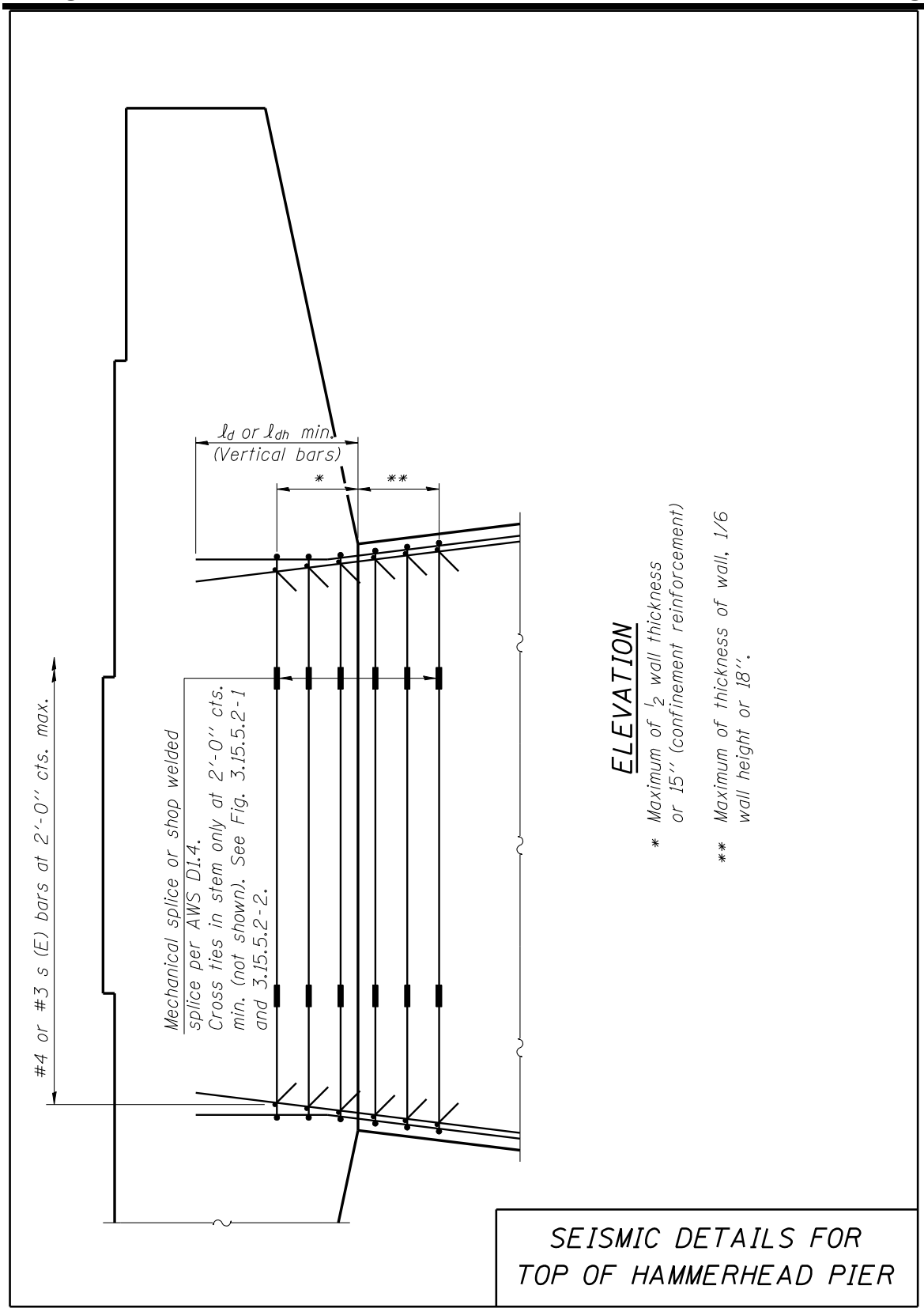

Figure 3.15.5.2-3

As discussed in Section 3.15.4.3.4, hammerhead (not modified hammerhead) piers should typically be designed more like a column than a wall. Details similar to those for a trapezoidal column may be more suitable around the hammerhead (analogous to a cap beam on a single column) and wall (stem) interface portion of the pier depending upon how the pier has been dimensionally proportioned. Hoops, either mechanically spliced or welded (as described above for the bases of walls), with constant dimensions should be provided for a distance of at least ½ the thickness of the wall or 15 in., whichever is greater, into the hammerhead cap. Either lapped, closed rectangular hoops with cross ties or horizontal perimeter reinforcement with cross ties should be provided over the height of the wall and satisfy the same prescriptive requirement previously mentioned. At a minimum, the vertical bars in the walls should extend l_d or l_{dh} into the hammerhead (cap). Hooked bars are preferred by the Department as they provide increased ductility see Figure 3.15.5.2-3. When detailing hooked bars, constructability and bar congestion shall be considered.

3.15.5.3 Individually Encased and Solid Wall Pile Bent Piers

For individually encased and solid wall pile bents, piles should be embedded into cap beams a minimum of 2 ft. – 0 in. Note that a deeper cap may be needed to fulfill this requirement.

Reinforcement for solid wall pile bent piers shall be according to Figure 3.9.6-1. This reinforcement shall be used for all solid wall pile bent piers regardless of seismic region.

If the designer considers individual pile encasements to be structural, the encasement reinforcement shall be detailed in accordance with 3.15.5.1.

3.15.5.4 Drilled Shaft Piers

Seismic details for drilled shaft piers are shown in Figures 3.15.5.4-1 through 3.15.5.4-5. Many of the same types of details used for other classes of piers are also applicable to drilled shafts. Some of the primary differences as well as similarities are emphasized in this section.

All column and cap beam interface region seismic details are similar to those for circular column bents for shear and vertical steel. The alternative options for shear reinforcement extensions into cap beams (using ties instead of spiral extensions) are also permitted (See Figures 3.15.5.1-2

and 3.15.5.1-4). Vertical bars in the columns should extend l_d or l_{dh} into caps. Hooked bars are preferred by the Department as they provide increased ductility. When detailing hooked bars, constructibility and bar congestion shall be considered.

Lap splices for spirals and longitudinal (vertical) bars are strictly prohibited in theoretical plastic hinging regions and near column-shaft interfaces as these are considered potential plastic hinging locations. Lap splicing of spiral and longitudinal reinforcement is also strongly discouraged in all other regions of columns and shafts whenever possible. For tall shafts, splicing of spiral reinforcement may be required for constructability purposes. As splicing of reinforcement within plastic moment regions is prohibited, these regions shall be shown on the plans. See Figures 3.15.5.1-1 and 3.15.5.1-2 for examples.

When splicing of longitudinal bars is necessary, they should be mechanically spliced. Mechanical splices for vertical bars shall be staggered according to LRFD Article 5.10.11.4.1f. An exception to using mechanical splices is when nominal extensions of the drilled shaft cages are required in construction due to variable field conditions. In most instances, the cage can be lengthened by lap splicing additional bars at the base of the cage as the moment demand in this area is greatly diminished. This should be handled on a project by project basis.

In “transition” regions, such as column-shaft interfaces or when spiral center-to-center spacing changes, the extra 1 ½ turns at spiral terminations shall be welded together to form an equivalent seismic hoop, or alternatively, a 135° standard hook into the spiral core may be provided.

To ensure that spirals are spliced using equivalent seismic hoops, the following note shall be placed on the plans:

> *When splicing of spiral reinforcement is necessary, the spirals shall be provided with 1 ½ extra turns at the ends to be spliced. These additional turns shall either be welded together according to AWS D1.4, or shall both terminate with a 135° standard hook.*

Typically, spirals with pitches not greater than 6 in. (as recommended in the AASHTO Guide Specifications for LRFD Seismic Bridge Design) and not less than 3 in. are required in drilled shafts a minimum distance of 3 shaft diameters below ground, wall encasements, etc. The only exception is drilled shaft piers with crashwalls for which the minimum is the greater of 1 shaft

diameter or 30 in. below the crashwall (See Figure 3.15.5.4-4). Below these points, the spiral spacing shall be 6 in. as is currently detailed on the Departmental Base Sheets for drilled shafts.

Exterior reinforcement within crashwalls shall be mechanically spliced. This is considered to be adequate confinement for crashwalls and additional tie bars are unnecessary.

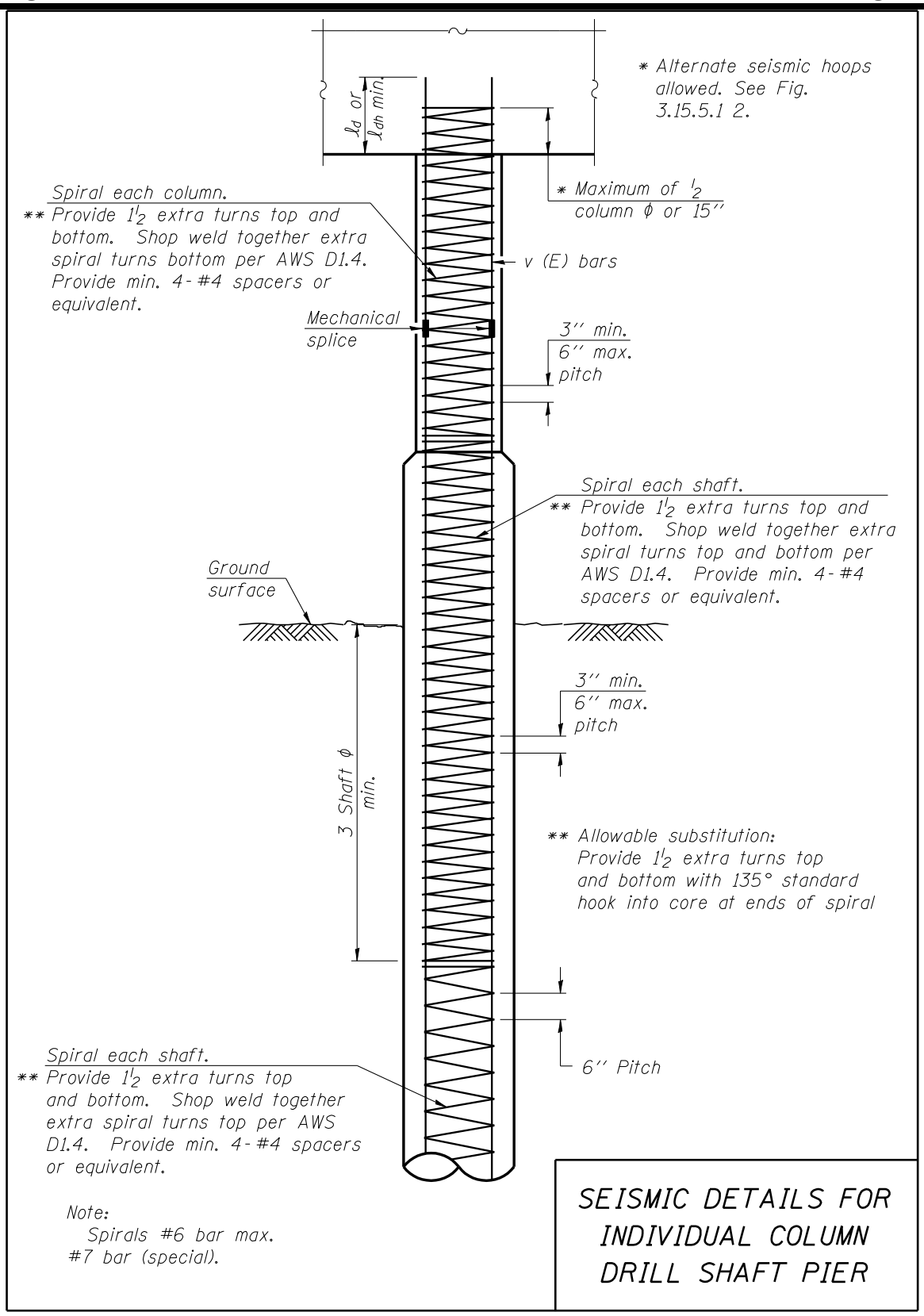

Figure 3.15.5.4-1

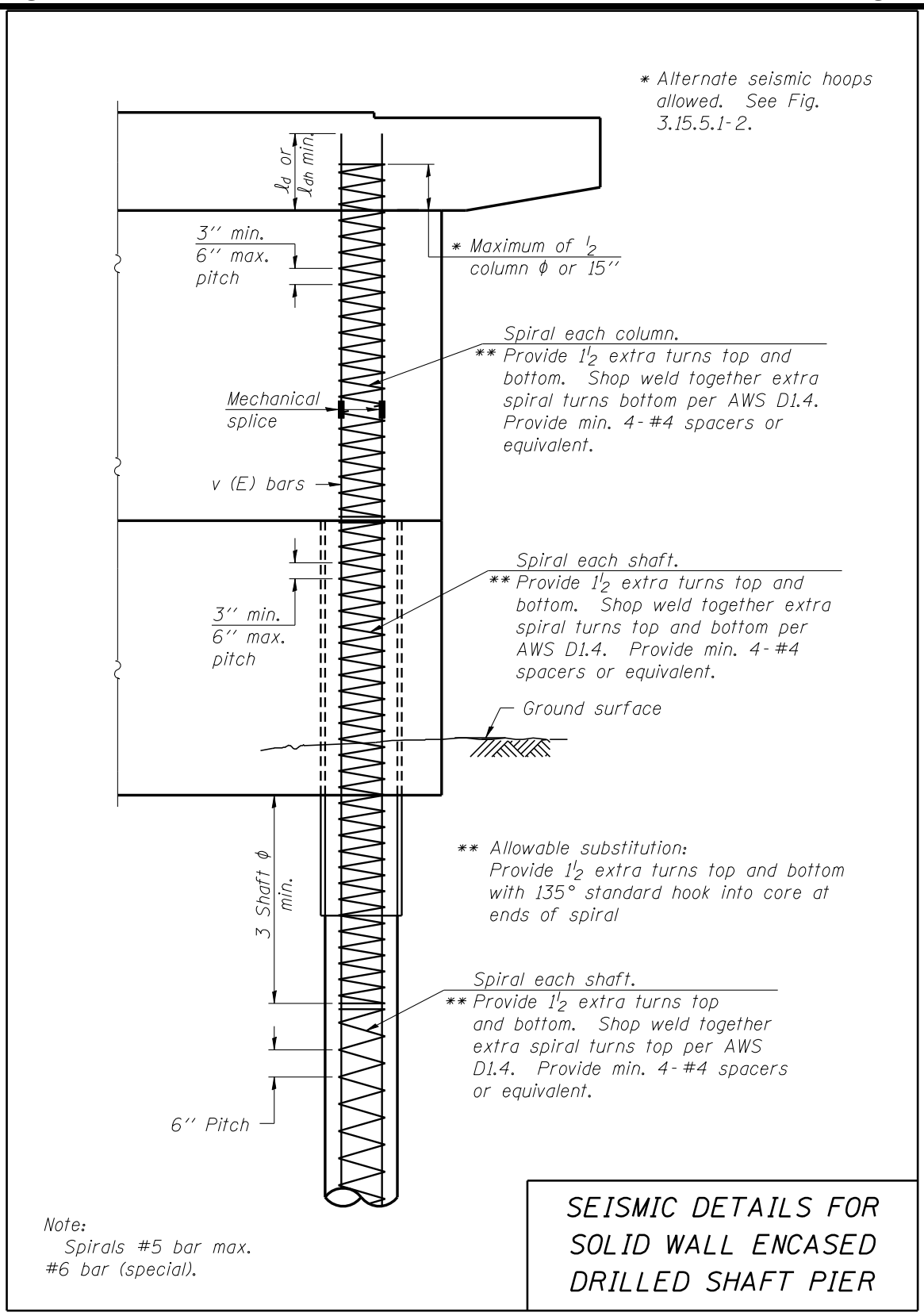

Figure 3.15.5.4-2

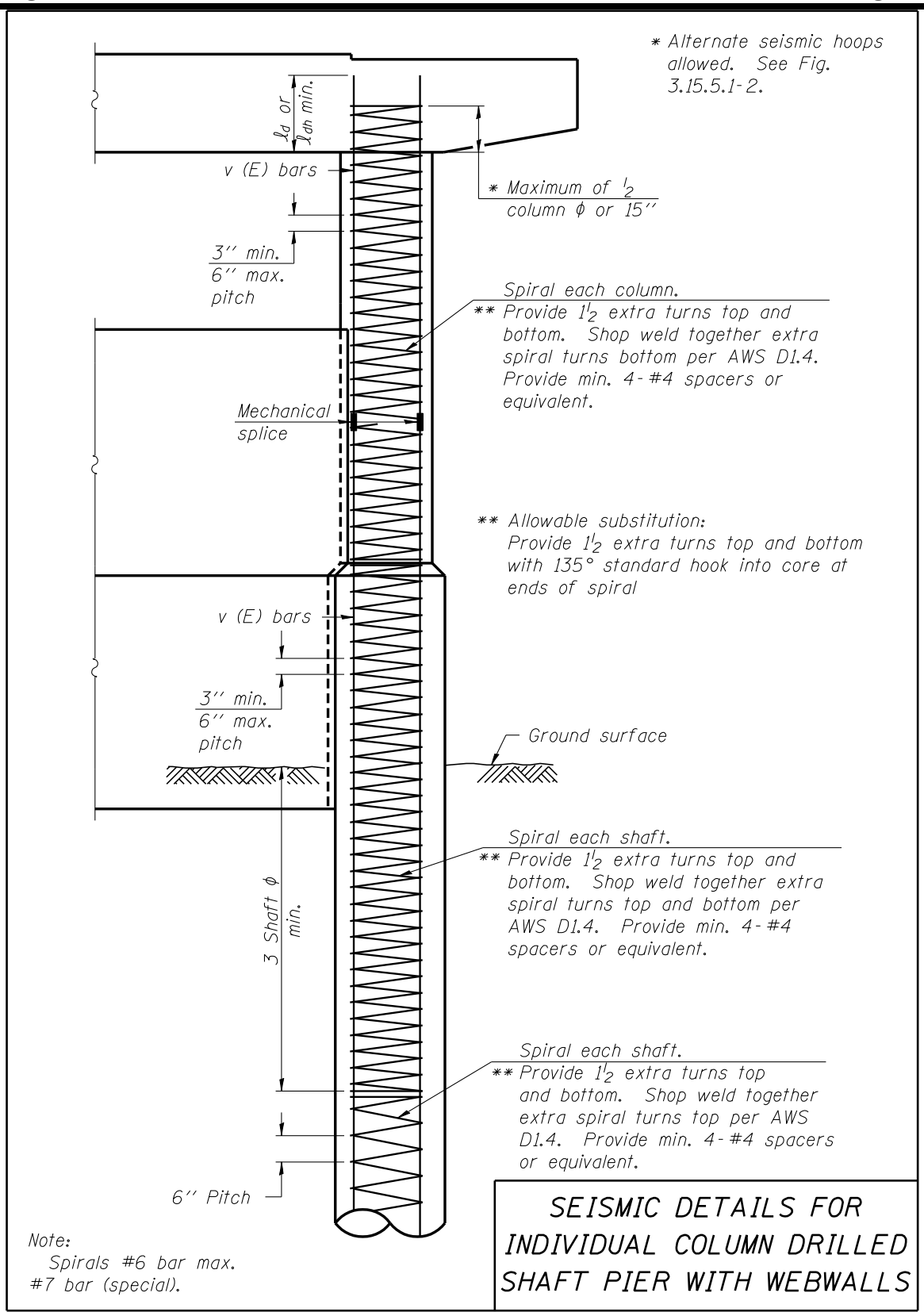

Figure 3.15.5.4-3

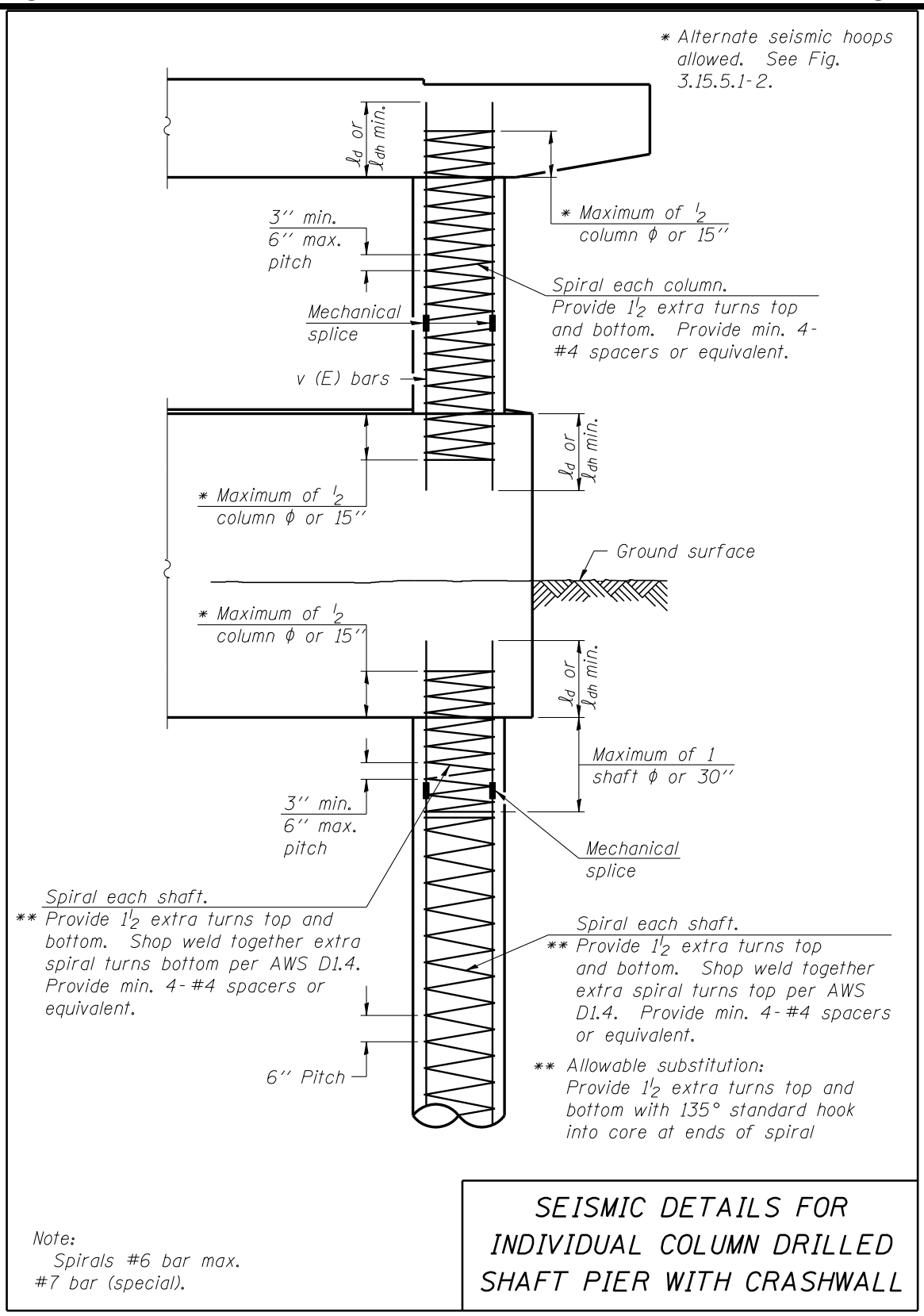

Figure 3.15.5.4-4

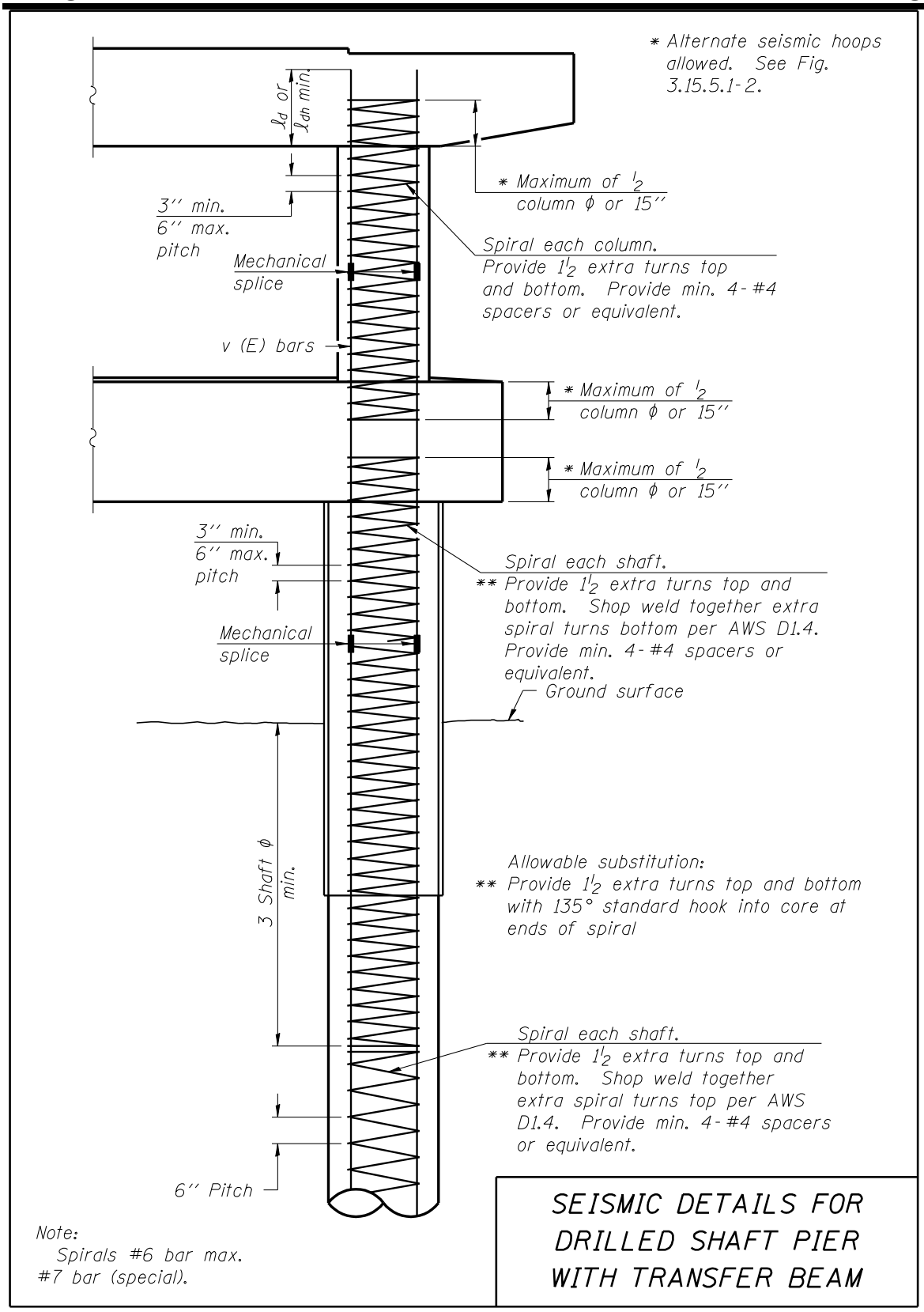

Figure 3.15.5.4-5

3.15.5.5 Piles

Piles at abutments, pier footings, and pier cap beams should typically be embedded a minimum of 2 ft. – 0 in. to ensure a fixed boundary condition. If a 2 ft. – 0 in. minimum embedment is not feasible or the piles are subject to tension, the details illustrated in Figure 3.15.5.5-1 should be used for steel H-piles. For metal shell (MS) piles, the details for pile reinforcement at abutments (Base Sheet F-MS) can be conceptually considered as equivalent to those in Figure 3.15.5.5-1 with regards to ensuring fixity and providing pullout resistance when the pile embedment is 2 ft. – 0 in. If pile embedment is less than 2 ft. – 0 in., the tops of the reinforcement bars should be extended so that the total embedment of the MS pile and reinforcement into the concrete member is not less than 2 ft. – 0 in. The top of the longitudinal bars for the MS piles shall be hooked 90°. Details of this type may also be provided at piers if required by design. See also Section 3.10.1 for further guidance on the geotechnical and structural design of piles.

In SPZ 2 through 4 and SPC B though D, the use of battered piles is discouraged due to the amount of stiffness they introduce into the structure and the difficulty in predicting their behavior during a seismic event. It is recommend that vertical piles, designed for combined axial and bending loads, be used whenever practical.

Structurally, metal shell piles should be designed as reinforced concrete columns in soil with the shell assumed to act compositely with the concrete. Note that, in general, the details for reinforcement provided inside of metal shell piles at abutments on Base Sheet F-MS are not considered supplemental columnar reinforcement for resistance to seismic loadings. The reinforcement shown on the base sheets is intended to provide a nominal amount of shear and flexural capacity near the top of the piles should the metal shell corrode and deteriorate. The designer has the option of using additional reinforcement to obtain higher pile capacities if necessary.

Refer to the examples and appendices in Design Guide 3.15 for additional information on the design of piles to resist seismic loadings. Guidance on pile fixity depths and axial strength versus moment strength column curves for metal shell piles are provided in Appendix C of Design Guide 3.15. Examples 1 and 4 provide guidance and complete calculations for the structural design of piles to resist seismic loadings. With the exception of pile bent piers, when designing piles an R-factor of 1.0 shall be used.

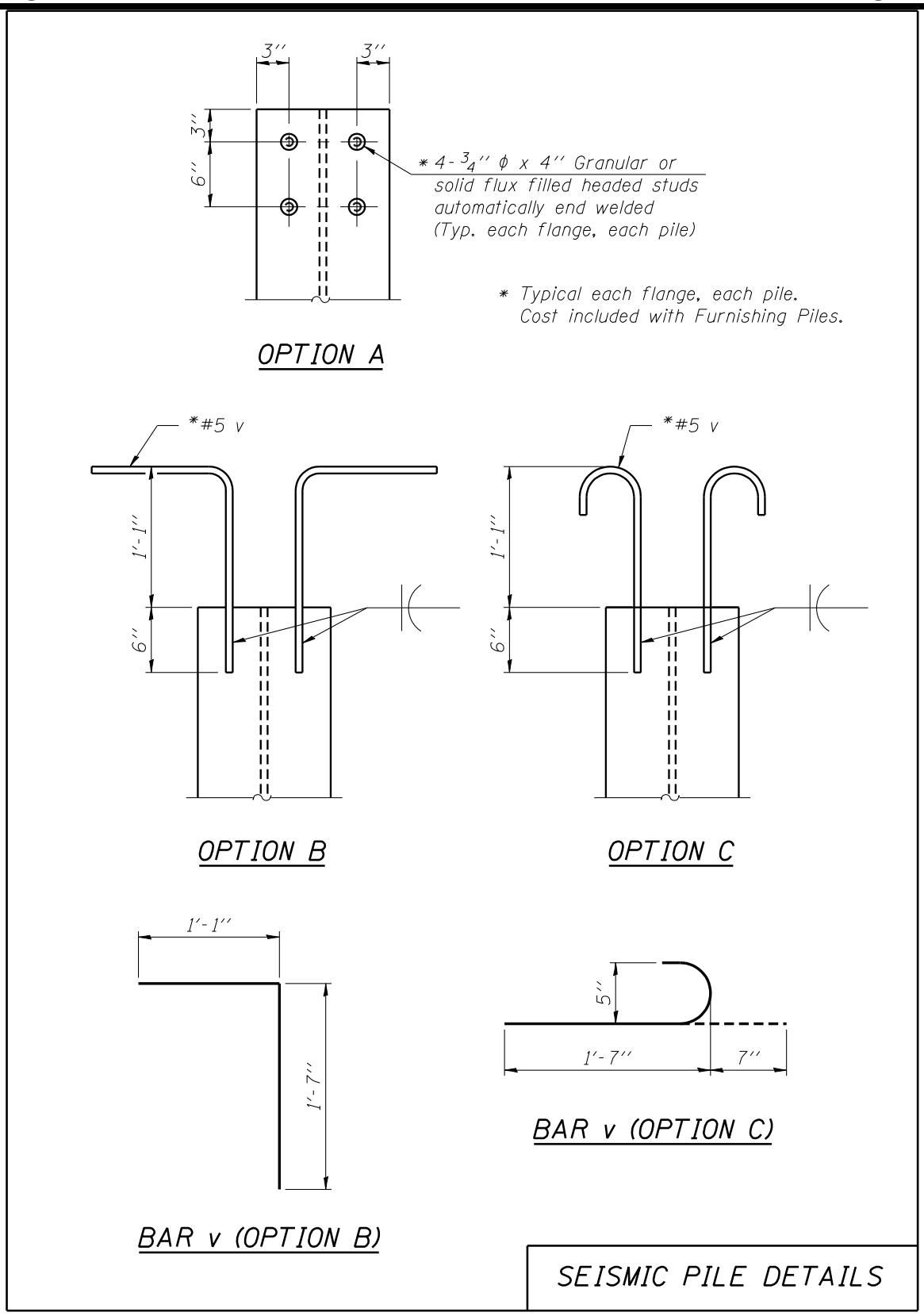

Figure 3.15.5.5-1

3.15.5.6 Spread Footings

Spread footings may be used in instances where competent rock exists within a reasonable distance from the ground surface or suitable soils are present where strength degradation under dynamic cyclical loading is not expected. Spread footings located on soils which are susceptible to liquefaction are strictly prohibited unless mitigated by ground improvements and approved by the BBS.

Articles 5.3 and 6.3 of the AASHTO Guide Specifications for LRFD Seismic Bridge Design may be referenced for information on the seismic design of spread footings. When designing spread footings, an R-factor of 1.0 shall be used.

3.15.5.7 Closed Abutments

When bars are required to be spliced in stems of closed abutments, they should be mechanically spliced. Mechanical splices for vertical bars shall be staggered according to LRFD Article 5.10.11.4.1f.

3.15.6 Overview of Global Analysis and Design Methods

LRFD and LFD

Most typical bridges built in Illinois can be analyzed and designed for seismic loadings with straightforward methods. Finite element models with only frame and spring type elements or hand calculation methods without the assistance of a computer can normally be used to achieve reasonably accurate results for design purposes. It is usually good practice, though, to use a combination of these two approaches for verification of results. This section contains an overview of the basics of global structural modeling and simple structural dynamics which can be used as tools for analyzing and designing typical bridges in Illinois for seismic loadings. More complete guidance and examples can be found by referencing Design Guide 3.15.

Typically, it is useful to divide seismic structural analysis of a bridge into separate global and local models. A global model encompasses the entire bridge while local models focus on certain parts of a structure such as a pier. Forces obtained from analysis of the global model are used to load local models.

3.15.6.1 Fundamental Period and Base Shears

Global models are typically used to determine the structural periods and design "base shears" in the longitudinal and transverse directions. The base shear in either the transverse or longitudinal direction is a percentage of a bridge's weight (or mass) which is used as a seismic design loading for the whole structure. The fundamental periods are a measure of the flexibility of a structure and are directly related to the level of design acceleration. In turn, the base shear is a function of the fundamental period and design acceleration. Generally, as structural flexibility increases, the design acceleration level decreases for a given soil type and design earthquake (or the percentage of the mass of the structure which is "effective" decreases).

For regular bridges, the first mode shape of a multimodal analysis is typically the controlling mode shape. The deflected shape of the first mode for a regular bridge as defined in LRFD and LFD approximates a half sine wave in the transverse direction. The deflected shape in the longitudinal direction is usually that of a cantilever at every fixed pier (and perhaps at abutments in the case of integral abutments) in a bridge.

To avoid the unnecessary rigors of a multimodal analysis, the AASHTO LRFD and LFD Codes suggest two simpler methods for calculating the fundamental periods and base shears for the first mode shape of a bridge, the Uniform Load Method and the Single Mode Spectral Analysis Method. The Uniform Load Method is considered the simpler of the two and, as such, is recommended. The key to the method is the determination of an "equivalent stiffness" of a bridge which is obtained by taking a total uniform load applied to a global model and dividing by the maximum computed deflection. LRFD Article 4.7.4.3.2c and LFD Div. I-A Article 4.3 outline the Uniform Load Method procedure.

The weight (mass) of the bridge to use in seismic analyses should be, at a minimum, the entire superstructure including the deck, future wearing surface, beams, parapets, cross-bracing, and diaphragms as appropriate; the cap beams at piers; and half of the pier columns or walls. Half the weight of the abutments may be included as well at the designer's discretion.

3.15.6.2 Transverse Models

A simple "generic" global model used for seismic analysis and design of the transverse direction for a three span bridge is illustrated in Figure 3.15.6.2-1. This basic model form can be adapted

to a number of situations which are typical in Illinois. It can also be expanded upon by including more spans (up to 6), or by using more complex representations of the superstructure, substructures and foundations with finite elements.

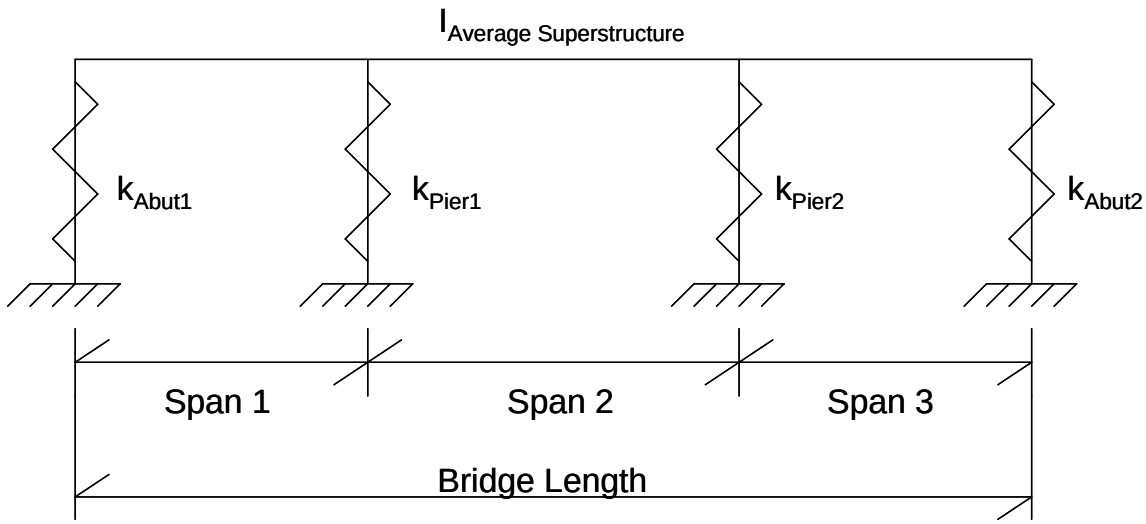

Figure 3.15.6.2-1

If a bridge exhibits a high degree of symmetry, it can be analyzed by hand methods (see Design Guide 3.15). Otherwise, the simplest finite element model for a 2 to 6 span bridge consisting of linear beam elements for the superstructure spans and substructure components may be used. Equivalent springs may be substituted for column elements and other substructure components. Spring element stiffnesses for global models can be determined from local models by applying a point load to a local model (100 kips, for example), finding the maximum deflection (0.5 in., for example) and calculating the ratio of applied load to maximum deflection to obtain a value for “k” (200 kips/in., for example).

If the superstructure does not have a uniform cross section along the entire length of the bridge (for example plate girder structures), a weighted average transverse moment of inertia may be used in most situations. It is acceptable to either count or discount the parapet’s contribution to the transverse moment of inertia of the superstructure. Considering the parapets as half effective may be the most realistic assumption. Typically, the superstructure of bridges built in Illinois is very stiff in relation to the substructures and foundations. As such, some assumptions related to a superstructure’s moment of inertia do not adversely affect the calculated period. Beams, either

PPC-I or steel, should only be counted as half-effective when determining the transverse superstructure moment of inertia to account for shear lag. The term shear lag refers to the assumption that only about the upper halves of the beams near the deck are fully engaged or effective.

Abutments can be modeled as pinned (infinite spring stiffness), but this is not recommended. The Uniform Load Method tends to overestimate the amount of the design base shear which "flows" to abutments. Consequently, pinned supports will amplify this effect which is not desirable. Reasonable modeling of the relative stiffnesses between support points (i.e. at substructures and foundations) is an aspect of credible modeling which should not be discounted.

For all support locations, regardless of whether the bearing is considered fixed or expansion, the connections between the superstructure and the substructures should be considered fully effective for transverse analyses.

3.15.6.3 Longitudinal Models

Typically, for global models in the longitudinal direction, the superstructure is modeled as infinitely rigid or as a rigid link between the substructures and foundations. At non-integral abutments, it is acceptable to assume that no longitudinal seismic force is transmitted from the superstructure at expansion bearings. The fixed piers, instead, are designed to carry the entire longitudinal base shear if both the bearings at the abutments are expansion type. According to the philosophy of the Illinois' ERS strategy, however, it is recommended to assume that some force is transmitted to abutments regardless of bearing type, fixed or expansion. At integral abutments and fixed piers, fully effective connections should be assumed.

3.15.7 Seismic Retrofitting of Existing Bridges

Sections 3.15.1 to 3.15.6 should all be used for reference when seismic retrofitting is considered for an existing bridge. Generally, the level of seismic retrofitting which would be required for a particular rehabilitation or reconstruction project depends upon several factors including, but not limited to, ADT; importance of the bridge; age of the bridge; economic considerations; if the bridge is on the Interstate, State, or Local System; etc. The range of standards the Department may deem appropriate for retrofitting a structure can vary from none, to minimal, to that for a 500 yr.

design event, or that for a 1000 yr. Event and will be established on a project by project basis. See Section 2.3.10 for more information and discussion.

The FHWA Seismic Retrofitting Manual for Highway Structures (2006) should be referenced as needed. However, designers should note that some of the presented analysis and design methods are considered somewhat impractical and overly complex by the Department for typical situations. When analyzing an existing structure, the response spectrum should be calculated for the 500 yr. seismic design event using the methods in the LFD Code, and for the 1000 yr. event, the LRFD Code methods should be used.

There are certain types of retrofitting goals that are considered more important than others by the Department. The level of importance stems from the IDOT ERS Strategy and the primary objective to prevent span loss. The relative importance of these goals should be viewed as more critical when achievement of the 500 yr. level of seismic capacity is not a viable option to the designer. When a 500 yr. or 1000 yr. seismic retrofit capacity is specified by the Department, the relative importance of the goals discussed below is somewhat diminished and details should be provided that satisfy the IDOT ERS Strategy.

Providing adequate seat widths is a high priority for an existing superstructure over other potential retrofit measures when options for the designer are limited. It is a key component of the Department's ERS strategy and objective to prevent span loss. If attainment of adequate seat widths is not a practical option, "equivalent seat widths" can be obtained using such measures as isolation bearings or longitudinal restrainer cables. Transversely, concrete blocks rigidly attached to pier or abutment caps on both sides of beams may be installed to significantly restrain movement during an earthquake and prevent loss of span.

When transverse and/or longitudinal restraint retrofit measures are used to achieve equivalent seat widths, the existing capacity of the substructure and foundation of a bridge becomes a more important consideration when attempting to attain a certain level of seismic capacity which is less than that required for the 500 yr. or 1000 yr. seismic design event. This is because there is a greater potential for the full energy of the design earthquake to be transmitted to the substructure and foundations. In these cases, it may become necessary to employ techniques such as fiber wraps, tensioned strands, or steel jackets in plastic hinging regions of columns and/or retrofit measures for the foundations. However, when retrofitting a bridge for the 500 yr. or 1000 yr.

design earthquake, all reasonable measures should be explored for possible implementation to achieve each level of seismic redundancy in the IDOT ERS strategy.

Figures 3.15.7-1 to 3.15.7-4 illustrate some techniques which the Department uses for seismic retrofitting of bridges. The methods presented in these figures, however, should not be considered as all inclusive. Chapters 8, 9 and 10 of the FHWA Seismic Retrofitting Manual for Highway Structures can also be referenced for state-of-the-art retrofitting techniques which may be acceptable to the Department.

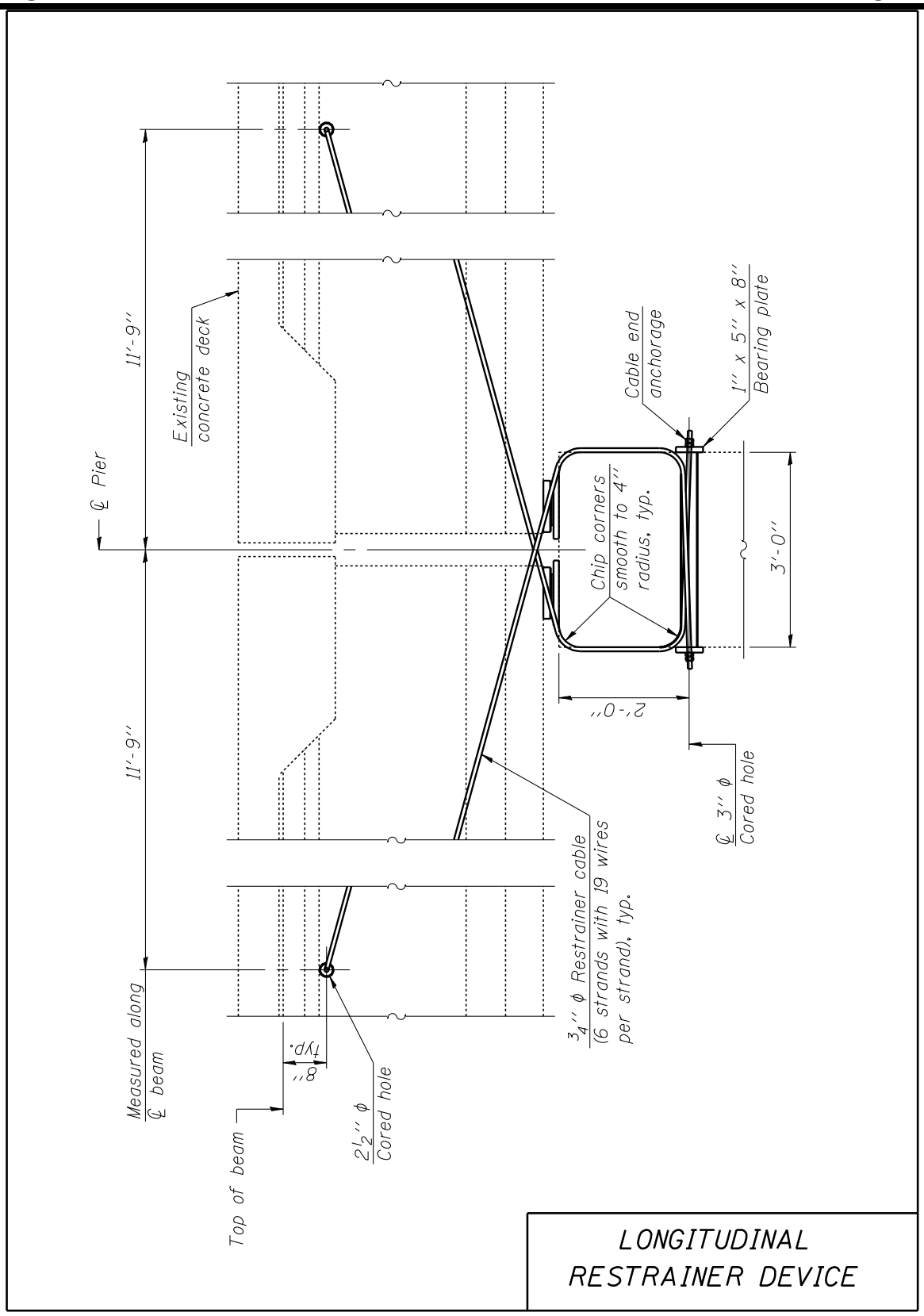

Figure 3.15.7-1

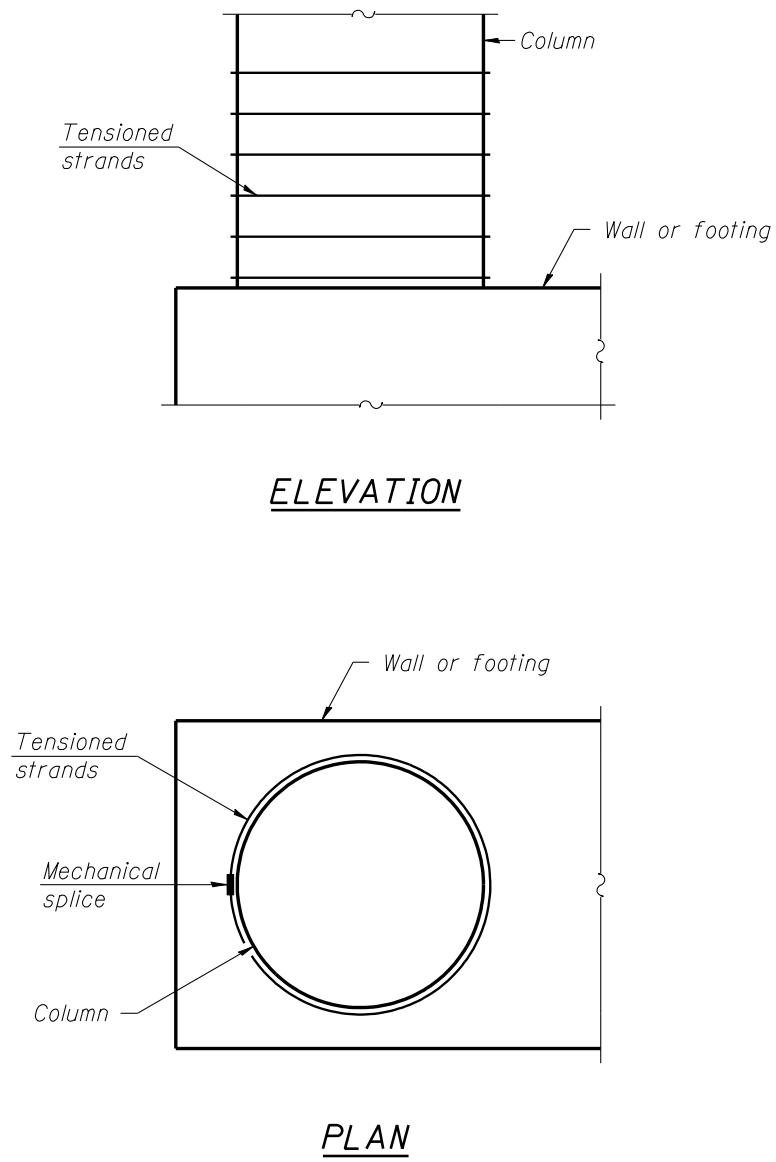

TENSIONED STRANDS

Figure 3.15.7-2

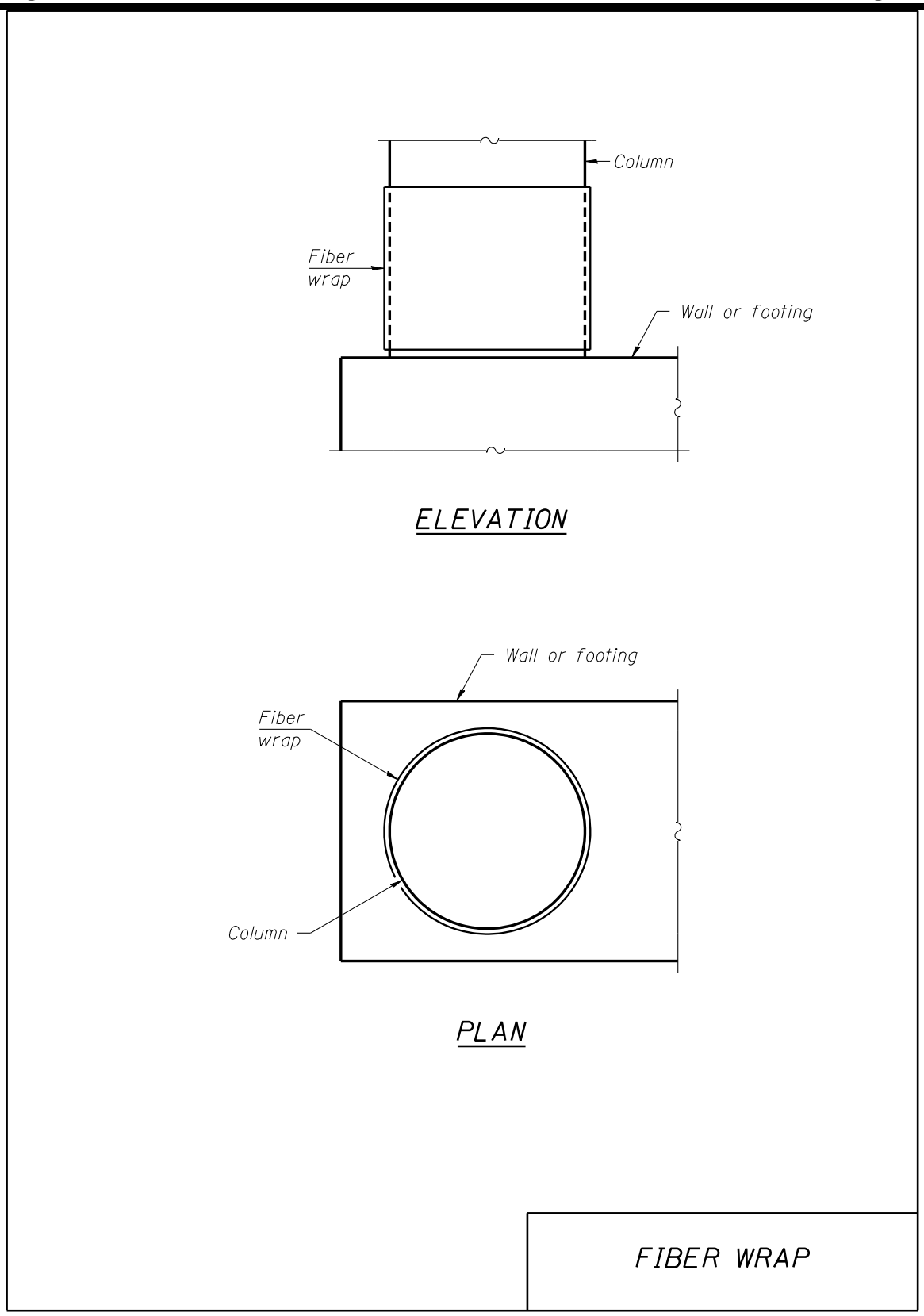

Figure 3.15.7-3

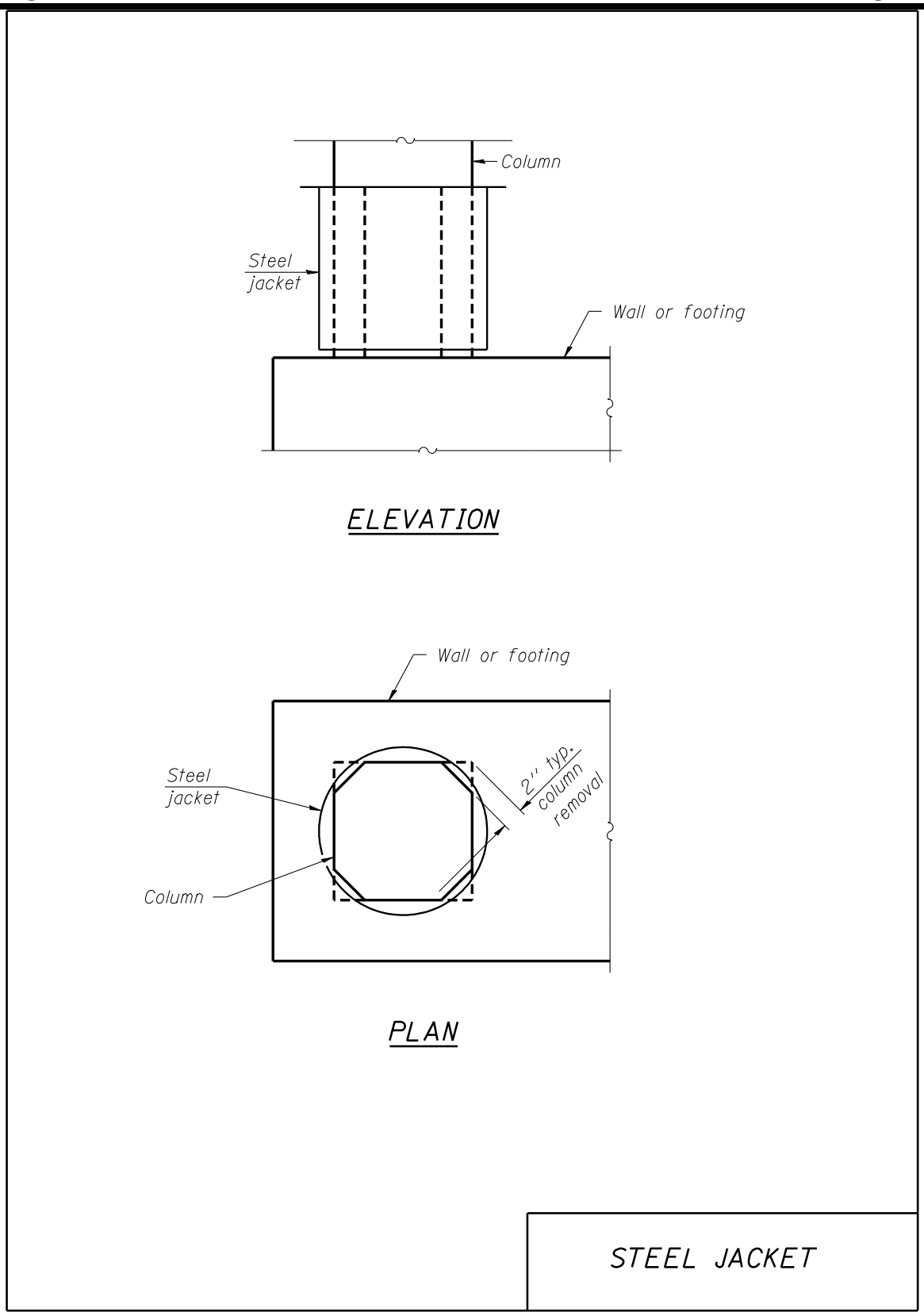

Figure 3.15.7-4

3.15.8 Local Bridge Flexible Design Option for 1000 Year Return Period Earthquake

A "flexible" approach for the 1000 yr. design return period seismic event using the LRFD Code and the Department's ERS strategy may be permitted for some local agency owned bridges in primarily rural areas that are part of a redundant roadway network. Roadways that may be completely closed to traffic during reconstruction are generally considered to be part of a redundant network of roadways. The term "flexible" primarily refers to an allowance for increased plasticity in substructures and foundations by employing larger R-Factors than those prescribed in Section 3.15.4.3.3 through 3.15.4.3.7. The generally less conservative, but still adequate, seat width requirements contained in LRFD Article 4.7.4.4 may also be used in lieu of Section 3.15.4.2.

This flexible design option is permitted on structures satisfying the following criteria:

- Simply supported non-composite PPC deck beam or concrete channel beam superstructures with less than six spans
- Steel wide flange (but not plate girder) or PPC I-beams (but not Bulb-T) superstructures with less than four spans
- Maximum total bridge length of 400 feet
- Pile bent/stub abutments with no bridge approach slab connected to the abutments
- All slab structures
- Structures not on the National Highway System

The following recommended R-Factors for the 1000 yr. design return period earthquake are based upon bridges being classified as "Other" according to the LRFD Code. Note that the flexible design approach is not permitted for the 500 yr. (LFD) design return period earthquake.

1. Circular and trapezoidal column bents with cap beam, crashwall, footing and piles
    a. Columns: R = 5.0
    b. Piles: R = 1.5
2. Solid wall and hammerhead bents with footing and piles
    a. Transverse direction of solid walls: R = 1.5
    b. Longitudinal direction of solid walls: R = 2.5
    c. Transverse direction of hammerheads: R = 2.5
    d. Longitudinal direction of hammerheads: R = 2.5
    e. Piles: R = 1.5

3. Individually encased and solid wall pile bent piers
    a. Piles: R = 3.5
4. Drilled Shaft Piers
    a. Individual column drilled shaft bents with plastic hinges below ground: R = 3.5
    b. Individual column drilled shaft bents with plastic hinges above ground: R = 5.0
    c. Solid wall encased drilled shaft bents: R = 3.5
    d. Individual column drilled shaft bent with web walls: R = 3.5 or 5.0
    e. Individual column drilled shaft bents with crashwall (columns): R = 5.0
    f. Individual column drilled shaft bents with crashwall (shafts): R = 1.5
5. Integral abutments
    a. Piles: R = 1.5
6. Pile supported stub abutments
    a. Piles: R = 1.5

Example 4 in Design Guide 3.15 details the design of a multi-span PPC deck beam bridge using the flexible approach. The bridge type in the example is commonly built on the Local Bridge System in the Southern regions of Illinois where seismicity is moderate to high. The bridge configuration consists of a set of simple spans supported by stub abutments each with a single row of piles, and individually encased pile bent piers. In addition, the superstructure overlay does not provide continuity over piers (which is typical). Multi-span PPC deck beam bridges primarily constructed on the Local System are essentially a special class of structures for seismic design compared to those discussed above.

3.16 Design Guides

Listed below (with Web Links) are Design Guides which are provided as supplements to this manual. A Design Guide Index can also be found on the Bureau of Bridges and Structures Documents Web Page at: http://www.idot.illinois.gov/doing-business/procurements/engineering-architectural-professional-services/Consultants-Resources/index

Under the Design Sub Tab.

1. Bridge Scupper Placement Design Guide 2.3.6.1.8
2. LRFD Deck Design Guide 3.2.1
3. LRFD Slab Bridge Design Guide 3.2.11
4. LRFD Composite Steel Beam Design Guide (for Straight Bridges) 3.3.4
5. LRFD Stud Shear Connector Design Guide (for Straight Bridges) 3.3.9
6. Camber Design Guide 3.3.12
7. LRFD Bolted Splice Design Guide 3.3.21
8. LRFD PPC I-Beam and Bulb T-Beam Design Guide 3.4
9. LRFD PPC Deck Beam Design Guide 3.5
10. Temporary Sheet Piling Design Guide 3.13.1
11. Temporary Geotextile Retaining Wall Design Guide 3.13.2
12. Cofferdam Seal Coat Design Guide 3.13.3
13. Seismic Design Guide 3.15

3.17 Miscellaneous Details

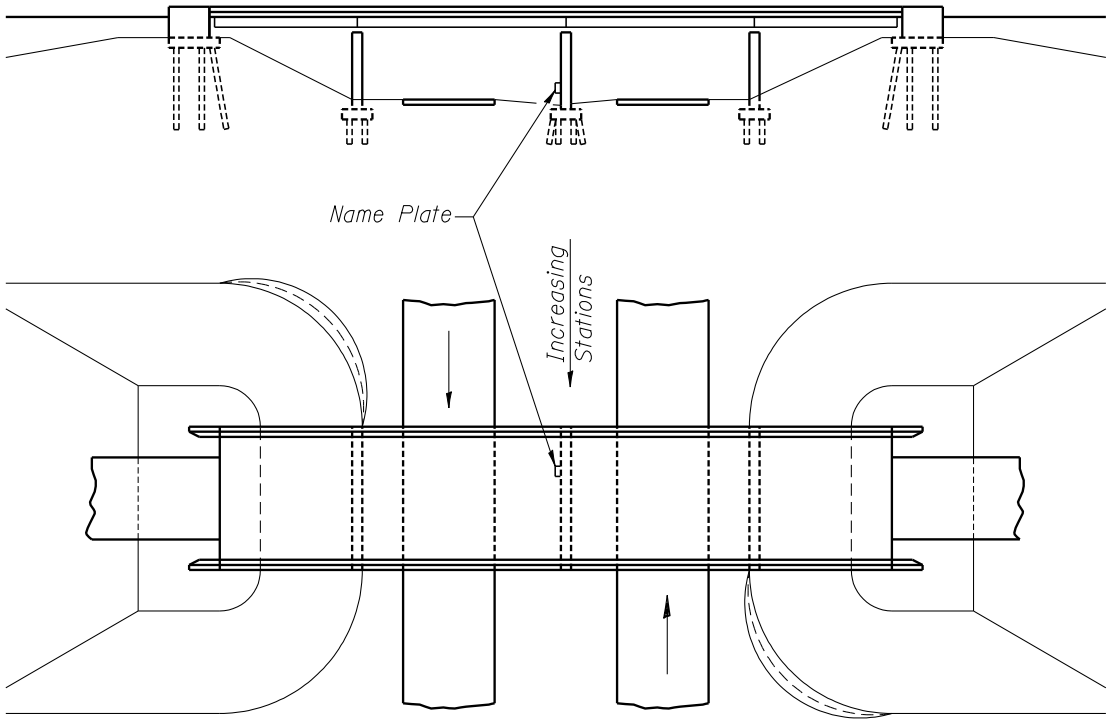

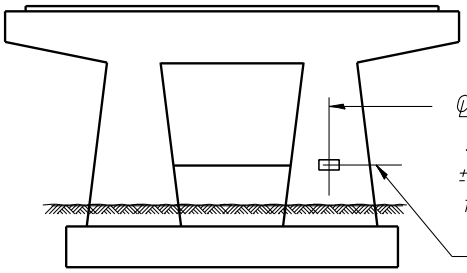

COLUMN TYPE OF PIERS
℄ of Column, Column nearest approaching traffic

SOLID PIERS
±3'-0" in from face of Pier, face that is facing approaching traffic

ALL PIERS
±4'-0" above crown of Roadway Elev.

GENERAL POLICY

For FAI Routes Under: Use one name plate on center pier.
For FAI Routes Over: Use one name plate on parapet. See figure 3.17-3.
For Rebuilt Structures: Locate new name plate next to existing name plate.

NAME PLATE LOCATION FOR FAI ROUTES

Figure 3.17-1

Refer all Name Plates to Std. 515001

1. F.A.I. Routes:

STATION 215+25
BUILT BY
STATE OF ILLINOIS
F.A.I. RT. 57 SEC.24-IHB-2
LOADING _____
STR. NO. ___-_____

2. F.A. & S.B.I. Routes:

STATION 17+63
BUILT BY
STATE OF ILLINOIS
F.A. RT. 157 SEC. 3B-2
LOADING _____
STR. NO. ___-_____

3. Local Agency (Federal-aid):

NAME OF STREAM
BUILT BY
ADAMS COUNTY
SEC. 83-00127-00-BR
F.A. RT. 1414 STA. 25+78
STR. NO. ___-_____ LOADING _____

4. City or County M.F.T. :

NAME OF STREAM
BUILT BY
CITY OF QUINCY
SEC. 80-00014-00-BR
STATION 29+42
STR. NO. ___-_____ LOADING _____

5. Township M.F.T. :

NAME OF STREAM
BUILT BY
COTTON HILL ROAD DISTRICT
SANGAMON COUNTY
SEC. 83-09021-00-BR
STATION 17+68
STR. NO. ___-_____ LOADING _____

6. R.R. Overhead and Subway:

C. & N.W. R.R.
BUILT BY
STATE OF ILLINOIS
F.A.I. RT. 57 SEC. 24-IVB-3
STA. 226+42 LOADING _____
STR. NO. ___-_____

Notes:
Refer to plans for correct station, loading (HL93, HS20, HS20 & alt., etc.), etc.
For bridge widening or partial bridge replacement projects requiring new name plates, name plate shall read "RE-BUILT". Add General Note 49 to the plans in these cases.

LETTERING FOR NAME PLATES

Figure 3.17-2

GENERAL POLICY

On one way traffic structures - Place name plate on right side of approach end.
On two way traffic structures - Place name plate on right side of approach end while looking in the direction of increasing stationing.

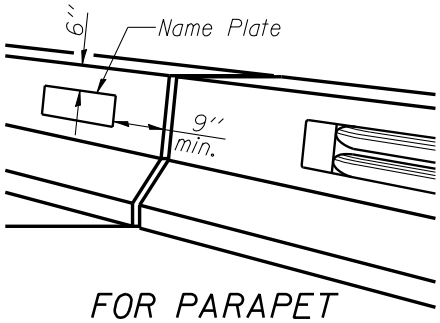

FOR PARAPET

When End Post is used.

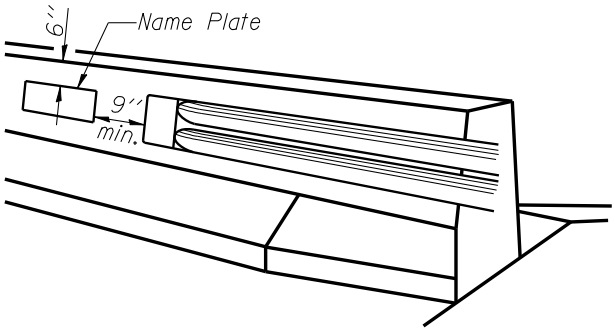

FOR PARAPET

When Dog Ear Wing is used.

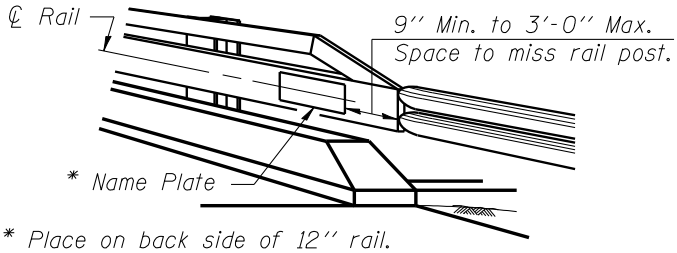

* Place on back side of 12'' rail.

FOR STEEL RAILS

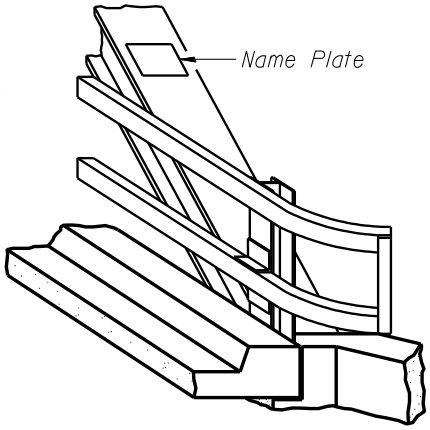

FOR TRUSSES

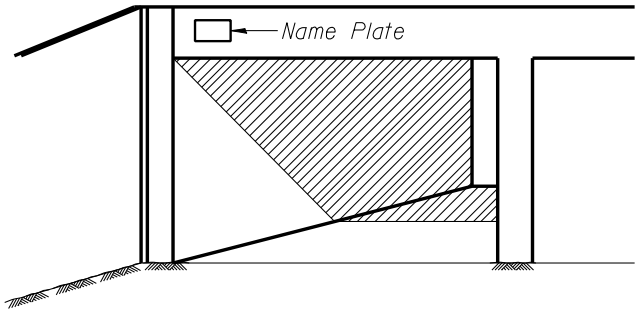

FOR MULTI-SPAN CULVERTS

Notes:

Unless otherwise noted on the plans, Name Plates are not required for structures less than 20' in length.

On dry land bridges, place name plate on parapet. If there is no parapet, embed name plate into curb or sidewalk section.

NAME PLATE LOCATION ON SUPERSTRUCTURES AND CULVERTS

Figure 3.17-3

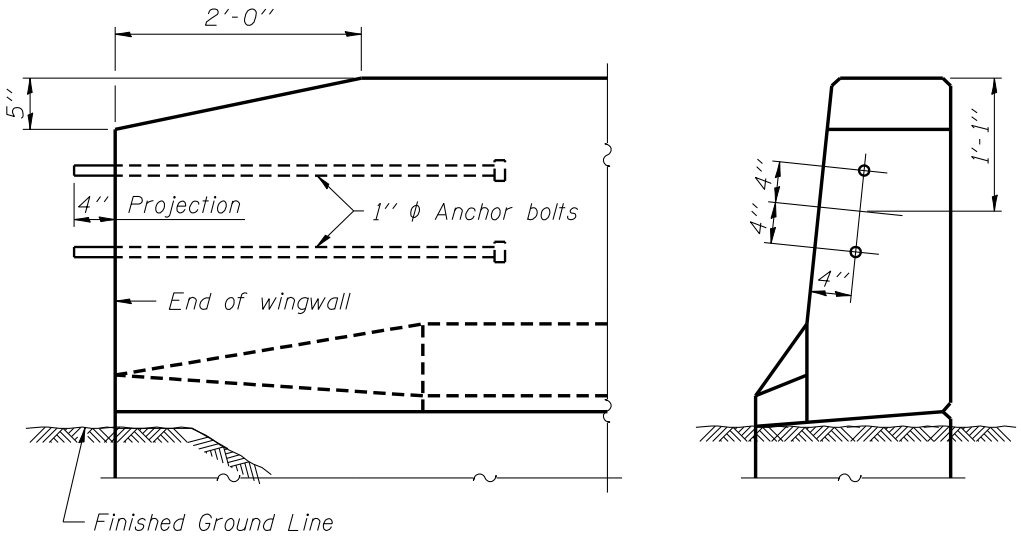

ELEVATION END VIEW

AT WINGWALL

At exit end only on one way Bridges

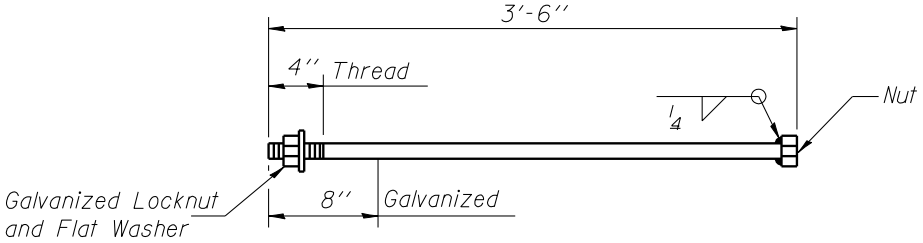

1" ϕ ANCHOR BOLT

Cost of bolts to be incidental to Bridge Structure.

GUARD RAIL ANCHORAGE

Figure 3.17-4

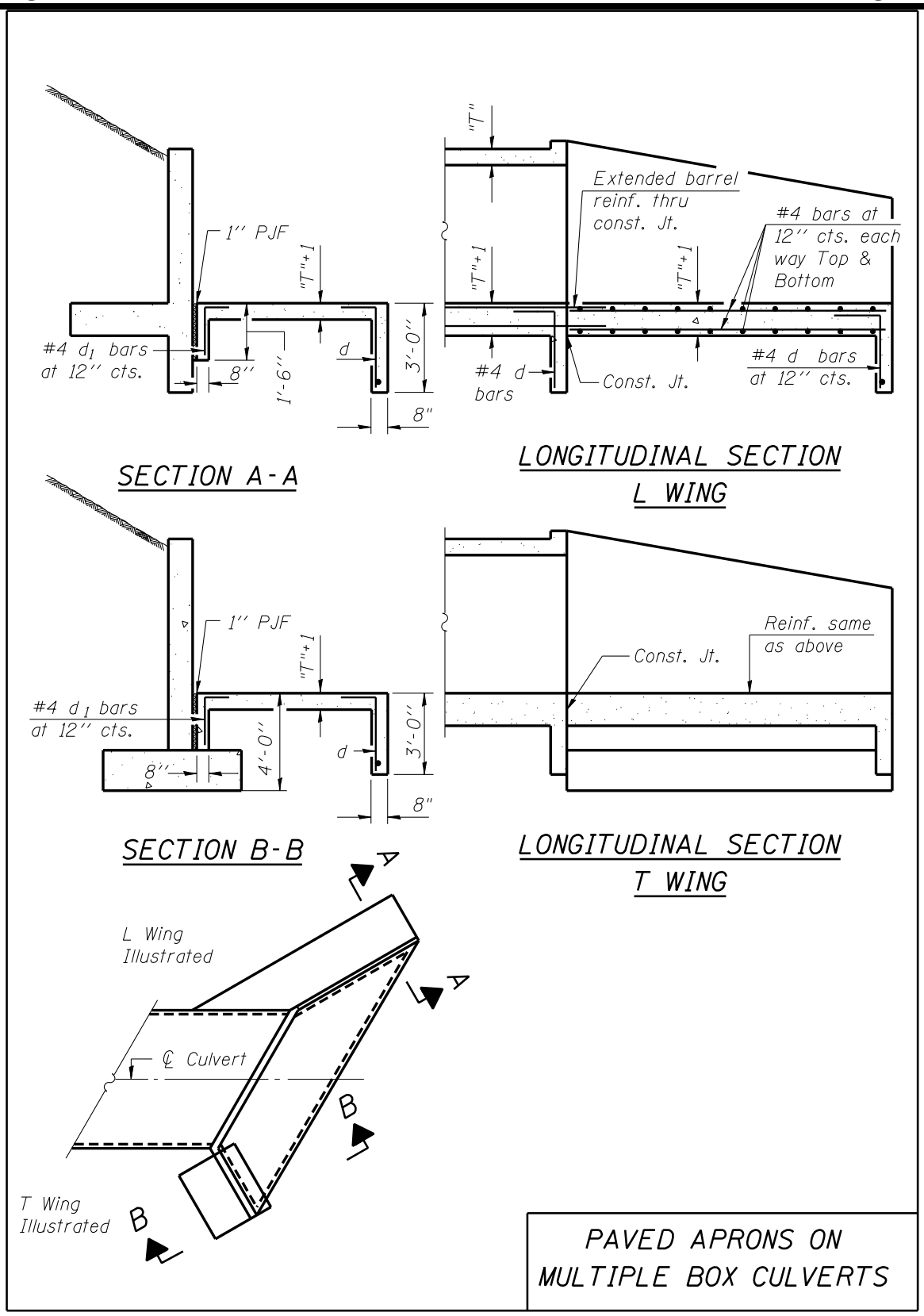
1'' PJF
"T"+1
#4 d1 bars
at 12'' cts.
8''
1'-6''
d
3'-0''
8"
SECTION A-A
"T"
Extended barrel
reinf. thru
const. Jt.
#4 bars at
12'' cts. each
way Top &
Bottom
#4 d bars
at 12'' cts.
#4 d
bars
Const. Jt.
LONGITUDINAL SECTION
L WING
1'' PJF
"T"+1
#4 d1 bars
at 12'' cts.
4'-0''
8''
d
3'-0''
8"
SECTION B-B
Const. Jt.
Reinf. same
as above
LONGITUDINAL SECTION
T WING
A
A
L Wing
Illustrated
℄ Culvert
B
B
T Wing
Illustrated
PAVED APRONS ON
MULTIPLE BOX CULVERTS

Figure 3.17-5

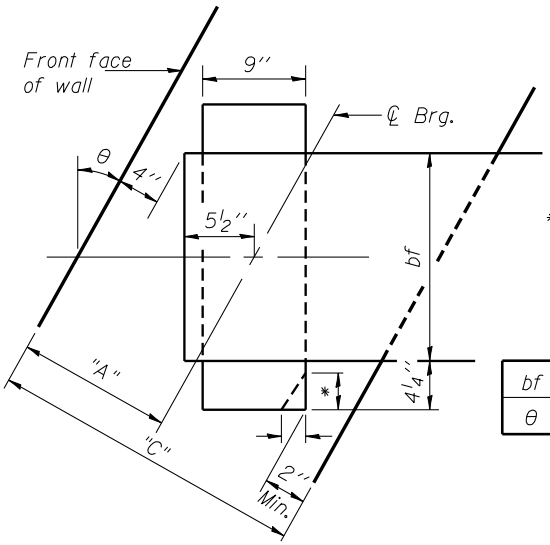

*Bott. ℙ may be clipped parallel to skew θ 3'' Max. to provide 2'' cl. when θ is > the values shown in table.

bf	14''	16''	18''	20''
θ	17°	15°-30'	14°	12°-30'

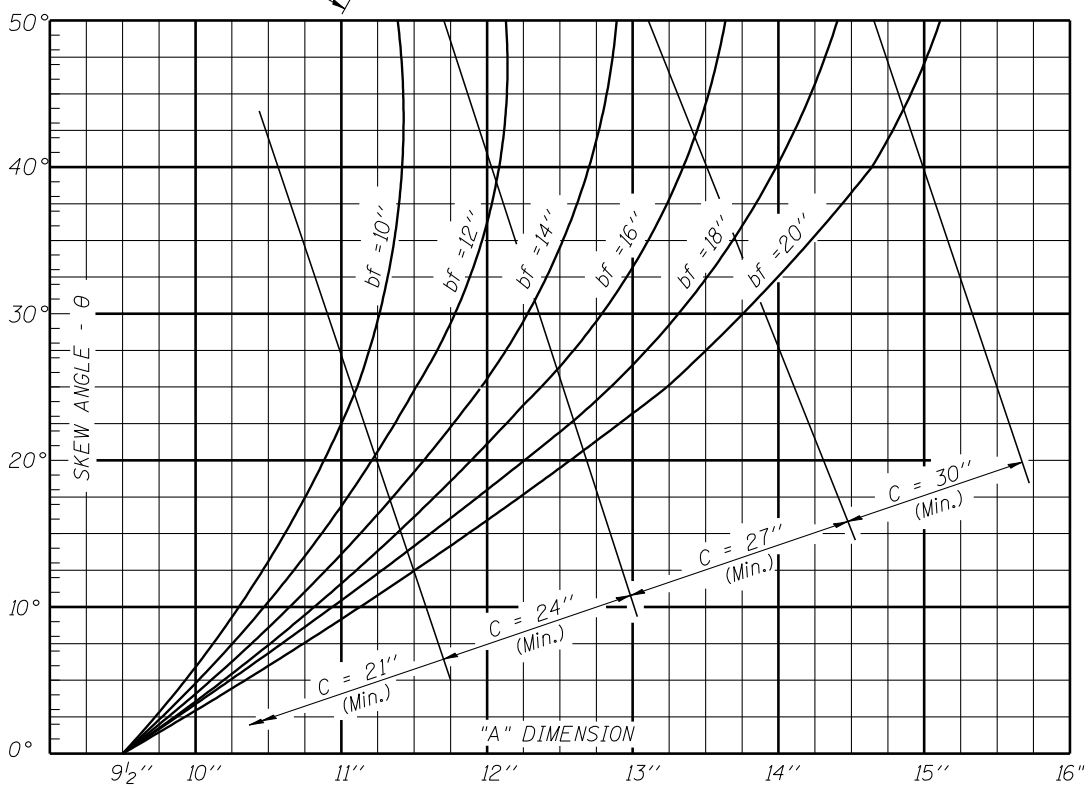

Note: "A" dimension may be rounded down to the nearest ¼''.
To be used for steel rocker bearing only.

BEAM BEARING LOCATION
ON ABUTMENT
WITH 1'' ϕ ANCHOR BOLTS

Figure 3.17-6

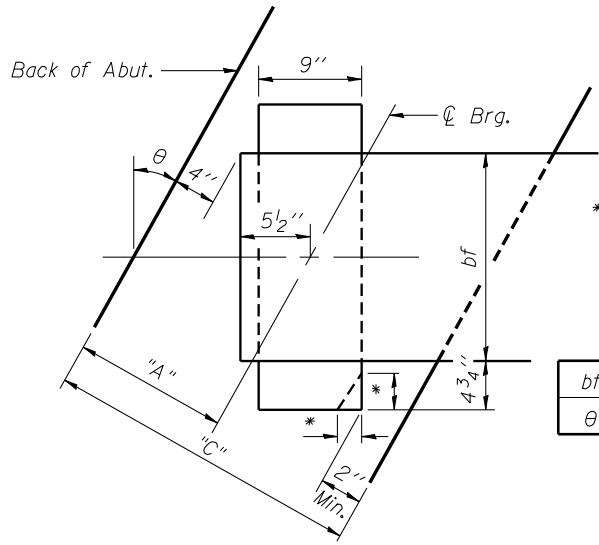

*Bott. ℙ may be clipped parallel to skew θ 3'' Max. to provide 2'' cl. when θ is > the values shown in table.

bf	14''	16''	18''	20''
θ	16°-30'	15°	13°-30'	12°

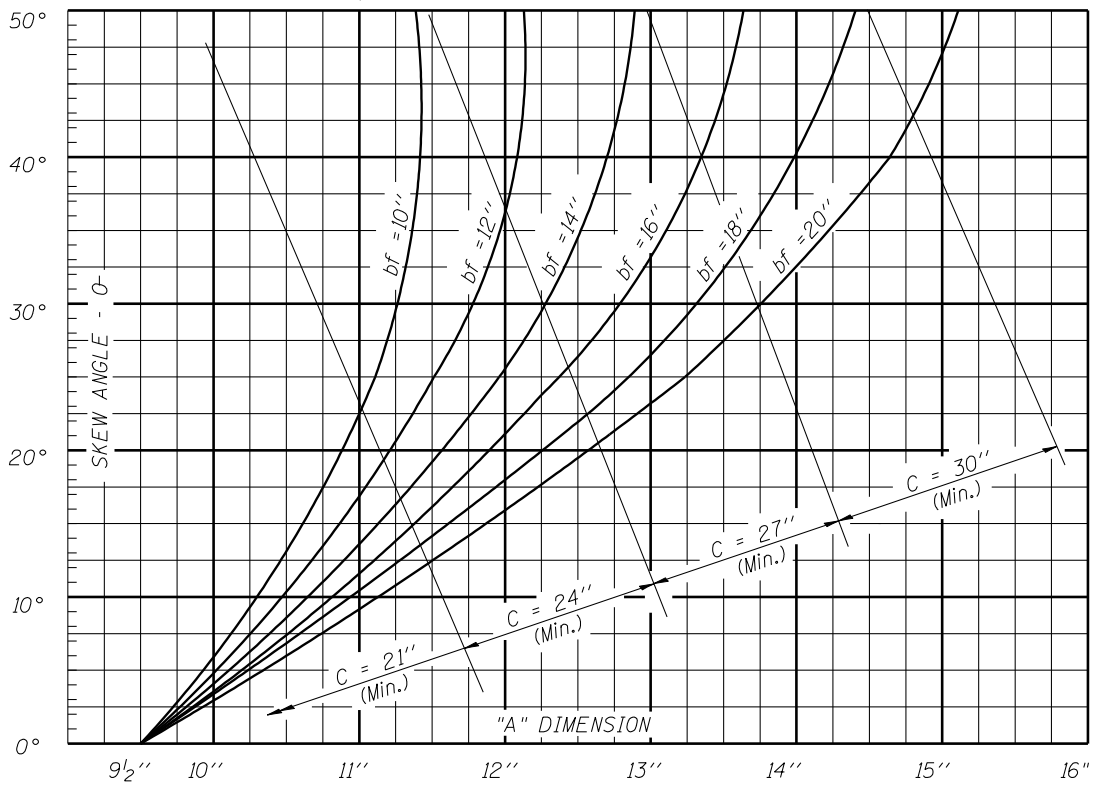

Note: "A" dimension may be rounded down to the nearest ¼''.
To be used for steel rocker bearing only.

ℙ GIRDER BEARING LOCATION
ON VAULTED ABUTMENT
WITH 1½'' ϕ ANCHOR BOLTS

Figure 3.17-7

MOMENT TABLE - Symmetrical Non-composite 3 Span

INTERIOR BEAM MOMENT TABLE				
		0.4 Sp.1 or 3	Pier 1 or 2	0.5 Sp.2
I	(in4)	6699	6699	6699
DL	(k/')	1.162	1.162	1.162
MDL	('k)	215	348	156
ML	('k)	332	259	317
Imp.	('k)	94	72	87
M TOTAL	('k)	641	679	560
fs	(ksi)	19.0	20.1	16.6

MOMENT TABLE - Symmetrical Composite 2 Span
(Composite in Positive Moment Areas Only)

INTERIOR GIRDER MOMENT TABLE			
		0.4 Sp. #1	Pier
Is	(in4)	28425	60981
Ic (n)	(in4)	58919	
Ic (3n)	(in4)	43922	
Ss	(in3)	1197	2100
Sc (n)	(in3)	1538	
Sc (3n)	(in3)	1409	
DL	(k/')	1.059	1.409
MDL	('k)	748	2301
fs DL -(non comp.)	(ksi)	7.5	13.2
SDL	(k/')	0.350	
Ms DL	('k)	300	
fs DL -(comp.)	(ksi)	2.6	
ML	('k)	1000	880
M (Imp)	('k)	221	189
fs [ML+M(Imp)]	(ksi)	9.5	6.1
fs (Total)	(ksi)	19.6	19.3
VR	(k)	62.5	

REACTION TABLE-

INTERIOR GIRDER REACTION TABLE			
		Abut.	Pier
RDL	(k)	54.7	194.7
RL	(k)	38.7	66.6
Imp.	(k)	8.8	14.3
R (Total)	(k)	101.7	275.6

Is and Ss are the moment of inertia and section modulus of the steel section used in computing fs (Total).
Ic(n), Ic(3n) and Sc(n), Sc(3n) are the moment of inertia and section modulus of the composite section used in computing fs (Total).
VR is the maximum L+ Impact shear range in span.

SERVICE LOAD
DESIGN DATA TABLES

Figure 3.17-8

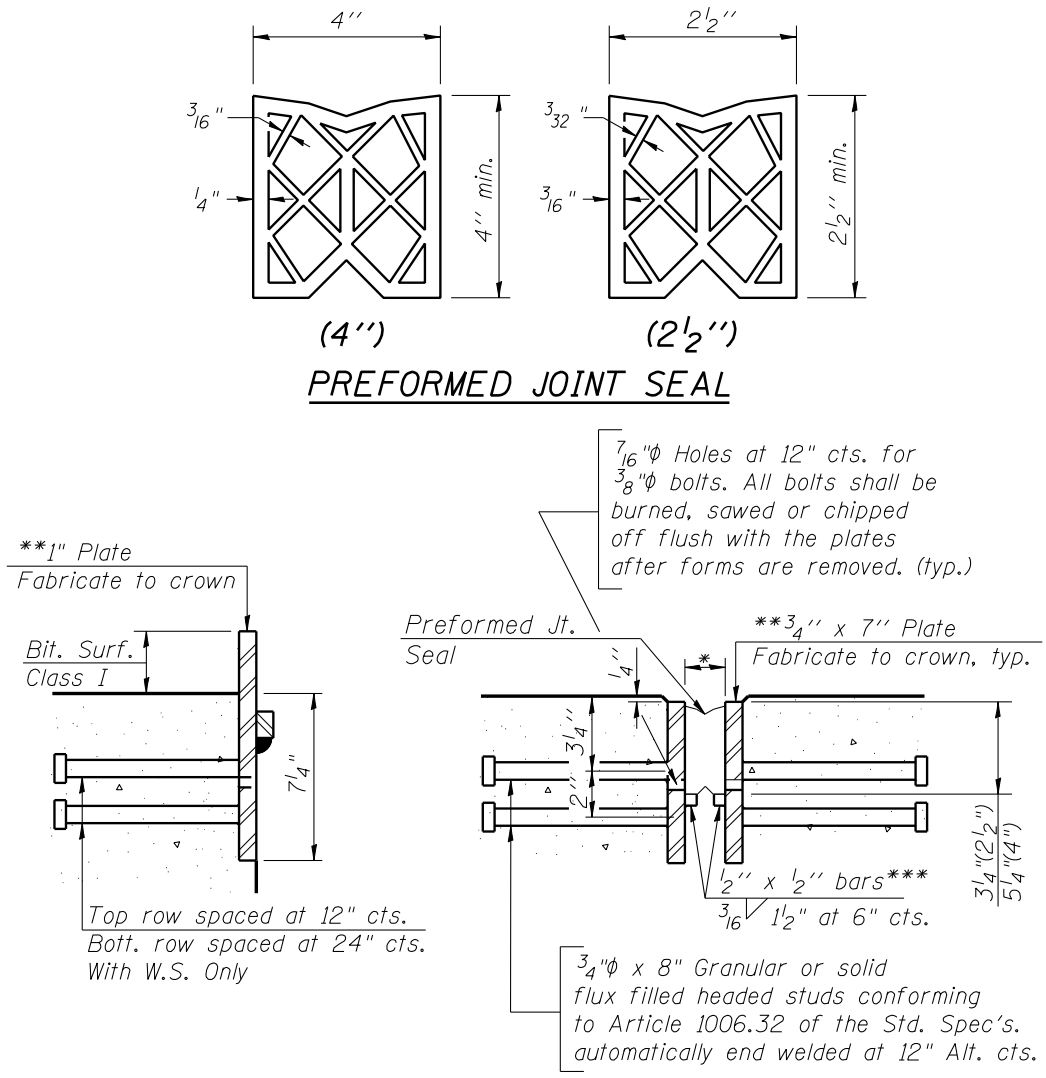

* 1 3/4" at 50° F at rt. L's (2 1/2" Joint Seal)
2 3/4" at 50° F at rt. L's (4" Joint Seal)

** Furnish in segments of 20 ft. maximum length. Maximum space between installed segments shall be 3/16". Seal space with Silicone Sealant suitable for Structural Steel.

*** Cut retainer bars in sidewalk or median 6'' short of the sidewalk or median face.

Note: After fabrication all surfaces of the steel plates shall be given one shop coat of paint specified for Structural Steel. No field painting required.

PREFORMED JOINT SEAL
EXPANSION JOINT

Figure 3.17-9

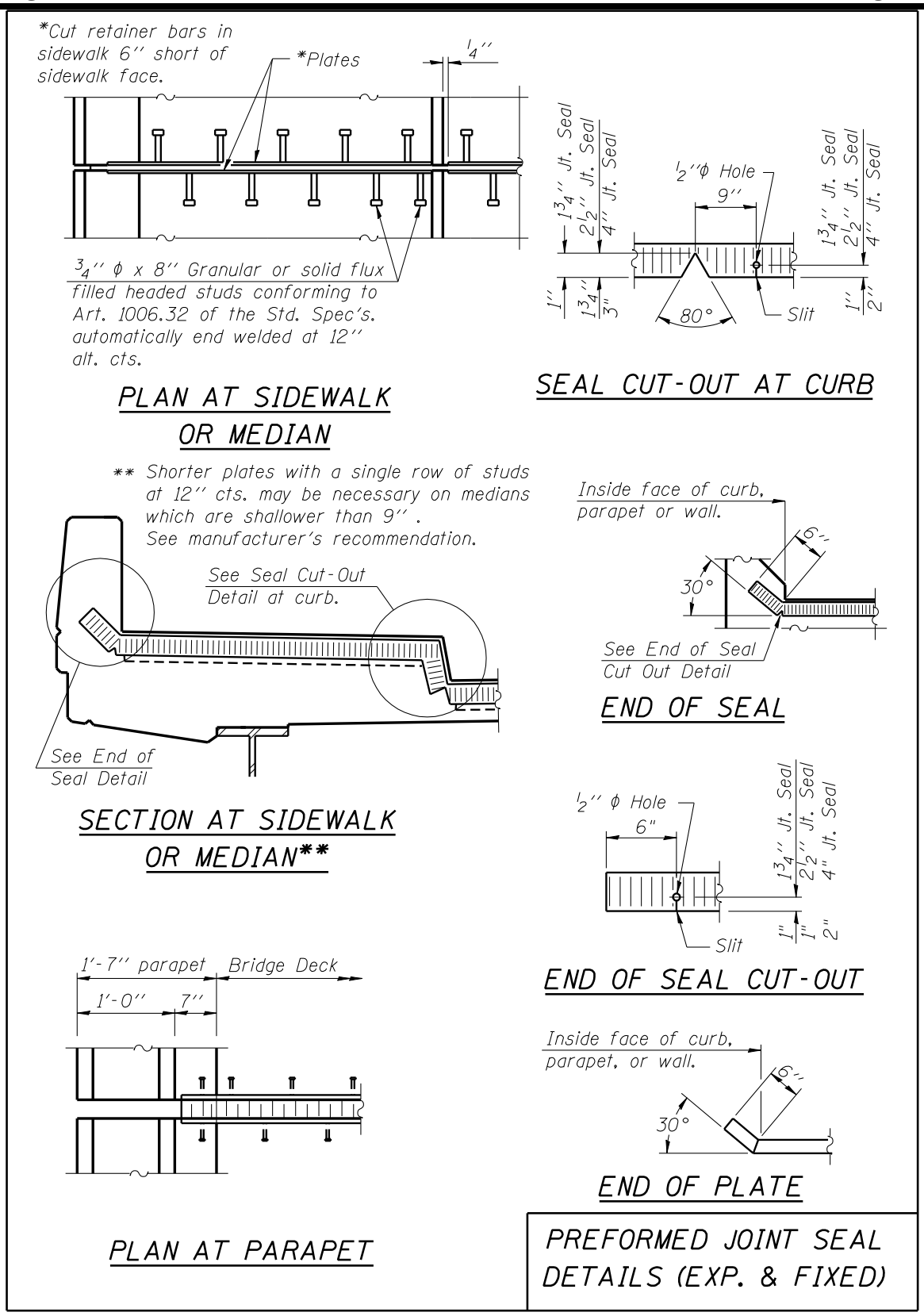

Figure 3.17-10

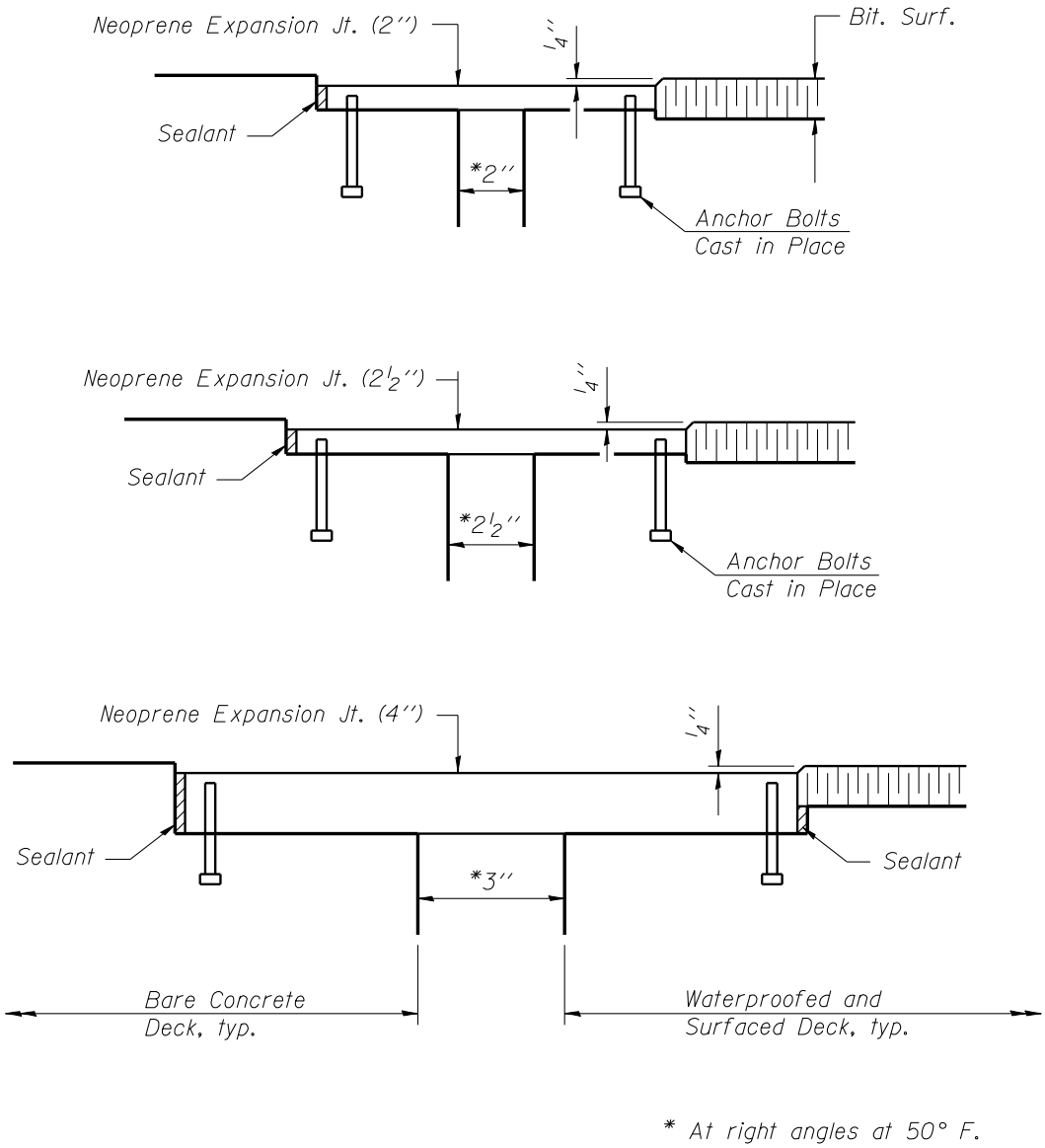

* At right angles at 50° F.

Note: See Base Sheet "EJ -CS" for dimensions & details.

TYPICAL NEOPRENE EXPANSION JOINTS AT POURED CONCRETE DECKS

Figure 3.17-11

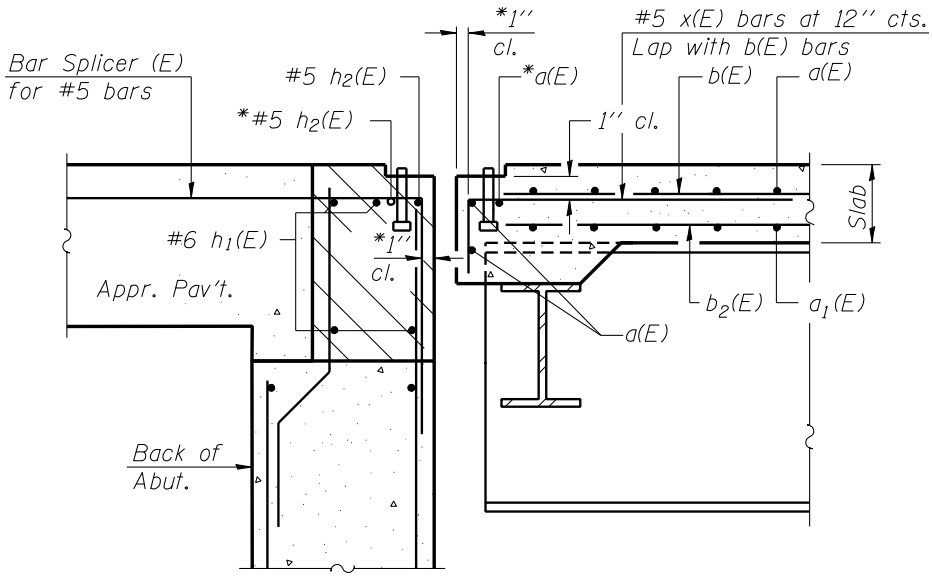

SECTION AT NEOPRENE EXPANSION JOINT

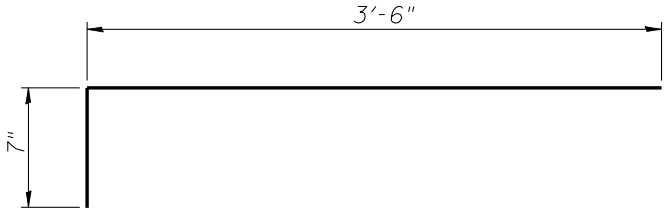

BAR x(E)

* Place a(E) and h_2(E) bars in back of anchor bolt as shown if required to maintain 1'' cl. (+0-$\frac{1}{8}$"). Anchor bolts should be tied to a(E) and h_2(E) bars.

Notes:
Reinforcement bars designated (E) shall be epoxy coated.

ADDITIONAL BARS AT NEOPRENE EXPANSION JT'S.

Figure 3.17-12

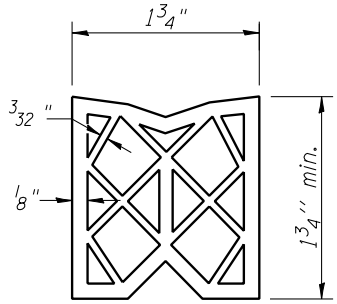

PREFORMED JOINT SEAL (1 3/4")

* 7/16"ϕ Holes at 12"cts. for 3/8"ϕ bolts. All bolts shall be burned, sawed or chipped off flush with the plates after forms are removed, typ.

** Furnish in segments of 20 ft. maximum length. Maximum space between installed segments shall be 3/16". Seal space with Silicone Sealant suitable for Structural Steel.

*** 3/4"ϕ x 6" Granular or solid flux filled headed studs conforming to Article 1006.32 of the Std. Spec's. automatically end welded at 12" cts.

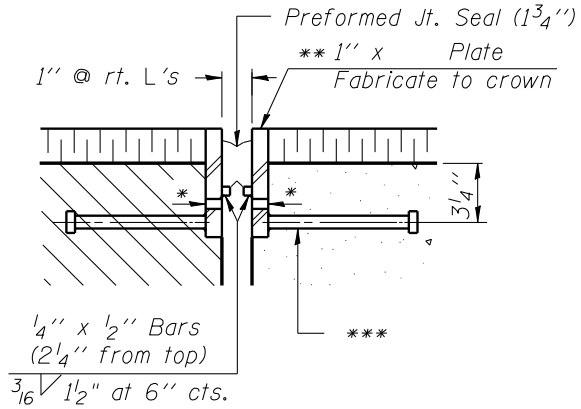

WITH WEARING SURFACE

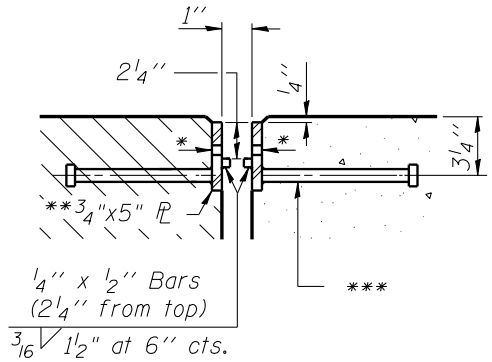

WITHOUT WEARING SURFACE

Note:
After fabrication all surfaces of the steel plates shall be given one shop coat of paint specified for Structural Steel. No field painting required.

PREFORMED JOINT SEAL
FIXED JOINT

Figure 3.17-13

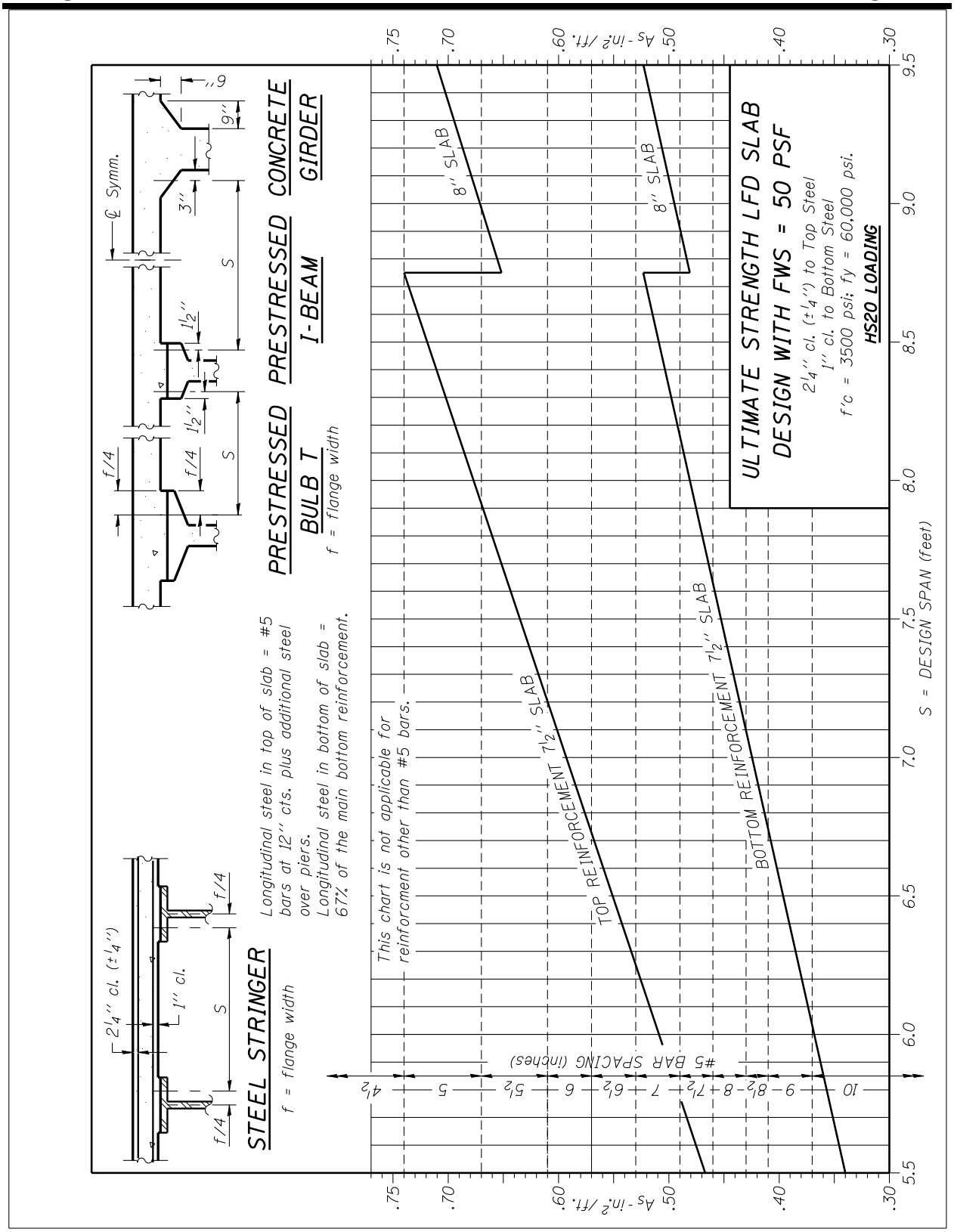

Figure 3.17-14

Section 4 Appendix

4.1 Design Aids

Prefix	County	District	Region
001	Adams	6	4
002	Alexander	9	5
003	Bond	8	5
004	Boone	2	2
005	Brown	6	4
006	Bureau	3	2
007	Calhoun	8	5
008	Carroll	2	2
009	Cass	6	4
010	Champaign	5	3
011	Christian	6	4
012	Clark	7	4
013	Clay	7	4
014	Clinton	8	5
015	Coles	7	4
016	Cook	1	1
017	Crawford	7	4
018	Cumberland	7	4
019	DeKalb	3	2
020	DeWitt	5	3
021	Douglas	5	3
022	DuPage	1	1
023	Edgar	5	3
024	Edwards	7	4
025	Effingham	7	4
026	Fayette	7	4
027	Ford	3	2
028	Franklin	9	5
029	Fulton	4	3
030	Gallatin	9	5
031	Greene	8	5
032	Grundy	3	2
033	Hamilton	9	5
034	Hancock	6	4
035	Hardin	9	5
036	Henderson	4	3
037	Henry	2	2
038	Iroquois	3	2
039	Jackson	9	5
040	Jasper	7	4
041	Jefferson	9	5
042	Jersey	8	5
043	JoDaviess	2	2
044	Johnson	9	5
045	Kane	1	1
046	Kankakee	3	2
047	Kendall	3	2
048	Knox	4	3
049	Lake	1	1
050	LaSalle	3	2
051	Lawrence	7	4
052	Lee	2	2
053	Livingston	3	2
054	Logan	6	4
055	McDonough	4	3
056	McHenry	1	1
057	McLean	5	3
058	Macon	7	4
059	Macoupin	6	4
060	Madison	8	5
061	Marion	8	5
062	Marshall	4	3
063	Mason	6	4
064	Massac	9	5
065	Menard	6	4
066	Mercer	4	3
067	Monroe	8	5
068	Montgomery	6	4
069	Morgan	6	4
070	Moultrie	7	4
071	Ogle	2	2
072	Peoria	4	3
073	Perry	9	5
074	Piatt	5	3
075	Pike	6	4
076	Pope	9	5
077	Pulaski	9	5
078	Putnam	4	3
079	Randolph	8	5
080	Richland	7	4
081	Rock Island	2	2
082	St Clair	8	5
083	Saline	9	5
084	Sangamon	6	4
085	Schuyler	6	4
086	Scott	6	4
087	Shelby	7	4
088	Stark	4	3
089	Stephenson	2	2
090	Tazewell	4	3
091	Union	9	5
092	Vermilion	5	3
093	Wabash	7	4
094	Warren	4	3
095	Washington	8	5
096	Wayne	7	4
097	White	9	5
098	Whiteside	2	2
099	Will	1	1
100	Williamson	9	5
101	Winnebago	2	2
102	Woodford	4	3

Suffixes to Denote Type of Work

A	-	Grading
AC	-	Access Control – Frontage Roads or other features of access control except bridges
B	-	Bridges (Complete Structures or Substructures only)
BR	-	Bridge Reconstruction
BY	-	Bridge Widening
D	-	Bridge Floors
E	-	Steel Erection
F	-	Steel Fabrication
FL	-	Railroad Crossing Protection
HB	-	Highway Grade Separation
HVB	-	Highway Railroad Grade Separation
I	-	Miscellaneous
K	-	Interchange Work except bridges
K-HB	-	Interchange Grade Separations
K-HVB	-	Interchange Grade Separation over Highway and Railroad
L	-	Lighting
P	-	Painting
R	-	Reconstruction
RS	-	Resurfacing
SB	-	Subway (Railroad)
T	-	Storm Sewers or Deficient Drainage Correction
TS	-	Traffic Signals
VB	-	Viaducts (Railroad)
W	-	Pavement Widening
Y	-	Widening Shoulders and Ditches
Z	-	City Pavement

No suffix is to be used for pavement sections

INCHES TO DECIMALS OF A FOOT

Fractions of an Inch	Decimals of a Foot											
	0 In.	1 In.	2 In.	3 In.	4 In.	5 In.	6 In.	7 In.	8 In.	9 In.	10 In.	11 In.
0	0.0000	0.0833	0.1667	0.2500	0.3333	0..4167	0.5000	0.5833	0.6667	0.7500	0.8333	0.9167
1/16	0.0052	0.0885	0.1719	0.2552	0.3385	0.4219	0.5052	0.5885	0.6719	0.7552	0.8385	0.9219
	0.0104	0.0938	0.1771	0.2604	0.3438	0.4271	0.5104	0.5938	0.6771	0.7604	0.8438	0.9271
3/16	0.0156	0.0990	0.1823	0.2656	0.3490	0.4323	0.5156	0.5990	0.6823	0.7656	0.8490	0.9323
1/4	0.0208	0.1042	0.1875	0.2708	0.3542	0.4375	0.5208	0.6042	0.6875	0.7708	0.8542	0.9375
5/16	0.0260	0.1094	0.1927	0.2760	0.3594	0.4427	0.5260	0.6094	0.6927	0.7760	0.8594	0.9427
3/8	0.0313	0.1146	0.1979	0.2813	0.3646	0.4479	0.5313	0.6146	0.6979	0.7813	0.8646	0.9479
	0.0365	0.1198	0.2031	0.2865	0.3698	0.4531	0.5365	0.6198	0.7031	0.7865	0.8698	0.9531
1/2	0.0417	0.1250	0.2083	0.2917	0.3750	0.4583	0.5417	0.6250	0.7083	0.7917	0.8750	0.9583
	0.0469	0.1302	0.2135	0.2969	0.3802	0.4635	0.5469	0.6302	0.7135	0.7969	0.8802	0.9635
5/8	0.0521	0.1354	0.2188	0.3021	0.3854	0.4688	0.5521	0.6354	0.7188	0.8021	0.8854	0.9688
	0.0573	0.1406	0.2240	0.3073	0.3906	0.4740	0.5573	0.6406	0.7240	0.8073	0.8906	0.9740
	0.0625	0.1458	0.2292	0.3125	0.3958	0.4792	0.5625	0.6458	0.7292	0.8125	0.8958	0.9792
13/16	0.0677	0.1510	0.2344	0.3177	0.4010	0.4844	0.5677	0.6510	0.7344	0.8177	0.9010	0.9844
	0.0729	0.1563	0.2396	0.3229	0.4063	0.4896	0.5729	0.6563	0.7396	0.8229	0.9063	0.9896
	0.0781	0.1615	0.2448	0.3281	0.4115	0.4948	0.5781	0.6615	0.7448	0.8281	0.9115	0.9948

REINFORCEMENT BARS
AREAS, WEIGHTS, PERIMETERS & SPACING PER ONE FT. SECTION

Size	Area Sq. in.	Wt. per ft. Lbs.	AREAS - As, given in **bold** type (top) in sq. inches. PERIMETERS - Σo, given in light type (bottom) in inches.													
			4"	4½"	5"	5½"	6"	6½"	7"	7½"	8"	8½"	9"	10"	11"	12"
2	.0490	.167	**.147**	**.131**	**.118**	**.107**	**.098**	**.090**	**.084**	**.078**	**.074**	**.069**	**.065**	**.059**	**.053**	**.049**
			2.36	2.10	1.89	1.71	1.57	1.45	1.35	1.26	1.18	1.11	1.05	.943	.858	.786
3	.1104	.376	**.33**	**.29**	**.27**	**.24**	**.22**	**.20**	**.19**	**.18**	**.17**	**.16**	**.15**	**.13**	**.12**	**.11**
			3.54	3.14	2.83	2.57	2.36	2.18	2.02	1.89	1.77	1.66	1.57	1.41	1.29	1.18
4	.1963	.668	**.59**	**.52**	**.47**	**.43**	**.39**	**.36**	**.34**	**.31**	**.29**	**.28**	**.26**	**.24**	**.21**	**.20**
			4.71	4.19	3.77	3.43	3.14	2.90	2.69	2.51	2.36	2.22	2.09	1.88	1.71	1.57
5	.3068	1.043	**.92**	**.82**	**.74**	**.67**	**.61**	**.57**	**.53**	**.49**	**.46**	**.43**	**.41**	**.37**	**.33**	**.31**
			5.89	5.24	4.71	4.28	3.93	3.62	3.36	3.14	2.94	2.77	2.62	2.36	2.14	1.96
6	.4418	1.502	**1.32**	**1.18**	**1.06**	**.96**	**.88**	**.82**	**.76**	**.71**	**.66**	**.62**	**.59**	**.53**	**.48**	**.44**
			7.07	6.28	5.66	5.14	4.71	4.35	4.04	3.77	3.53	3.33	3.14	2.83	2.57	2.36
7	.6013	2.044	**1.80**	**1.60**	**1.44**	**1.31**	**1.20**	**1.11**	**1.03**	**.96**	**.90**	**.85**	**.80**	**.72**	**.66**	**.60**
			8.25	7.33	6.60	6.00	5.50	5.07	4.71	4.40	4.12	3.88	3.67	3.30	3.00	2.75
8	.7854	2.670	**2.36**	**2.09**	**1.88**	**1.71**	**1.57**	**1.45**	**1.35**	**1.26**	**1.18**	**1.11**	**1.05**	**.94**	**.86**	**.79**
			9.42	8.38	7.54	6.86	6.28	5.80	5.39	5.03	4.71	4.44	4.19	3.77	3.43	3.14
9	1.000	3.400	**3.00**	**2.67**	**2.40**	**2.18**	**2.00**	**1.85**	**1.71**	**1.60**	**1.50**	**1.41**	**1.33**	**1.20**	**1.09**	**1.00**
			10.63	9.45	8.51	7.73	7.09	6.54	6.08	5.67	5.32	5.00	4.73	4.25	3.87	3.54
10	1.2667	4.303	**3.80**	**3.38**	**3.04**	**2.76**	**2.53**	**2.34**	**2.17**	**2.03**	**1.90**	**1.79**	**1.69**	**1.52**	**1.38**	**1.27**
			11.96	10.63	9.58	8.71	7.98	7.37	6.84	6.39	5.99	5.64	5.32	4.79	4.35	3.99
11	1.5615	5.313	**4.69**	**4.17**	**3.75**	**3.41**	**3.13**	**2.89**	**2.68**	**2.50**	**2.34**	**2.21**	**2.08**	**1.87**	**1.70**	**1.56**
			13.28	11.80	10.63	9.67	8.86	8.18	7.60	7.09	6.65	6.26	5.91	5.32	4.83	4.43

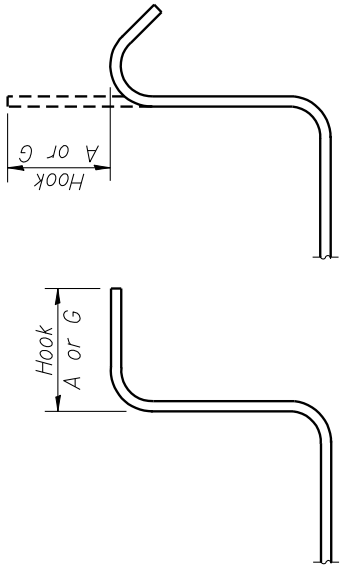

90° STIRRUP & TIE HOOKS

135° STIRRUP & TIE HOOKS

STIRRUP & TIE HOOKS

Grades 40-50-60 ksi

Bar Size	90° Hook Hook A or G	135° Hook Hook A or G
#4	$4\frac{1}{2}$"	$4\frac{1}{2}$"
#5	6"	$5\frac{1}{2}$"
#6	1'-0"	8"

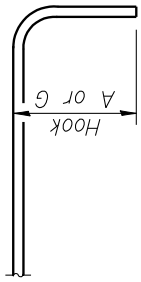

90° END HOOK

90° END HOOK

All Grades

Bar Size	Hook A or G
#4	8"
#5	10"
#6	1'-0"
#7	1'-2"
#8	1'-4"
#9	1'-7"
#10	1'-10"
#11	2'-0"
#14	2'-7"
#18	3'-5"

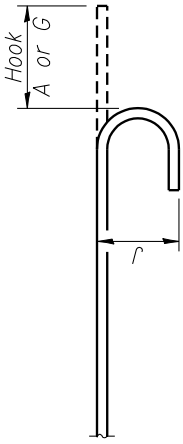

180° END HOOK

180° END HOOK

All Grades

Bar Size	Hook A or G	J
#4	6"	4"
#5	7"	5"
#6	8"	6"
#7	10"	7"
#8	11"	8"
#9	1'-3"	$11\frac{3}{4}$"
#10	1'-5"	1'-$1\frac{1}{4}$"
#11	1'-7"	1'-$2\frac{3}{4}$"
#14	2'-3"	1'-$9\frac{3}{4}$"
#18	3'-0"	2'-$4\frac{1}{2}$"

REINFORCEMENT BAR
HOOK DIMENSIONS

Reinforcement Bar Splices
(for Coated and Uncoated Bars)

Tension Splices

I. Regions of high tensile stress or
Reinforcement provided < twice that required for strength.

1. No more than 1/2 of the bars are lap spliced within a required lap length.
Use Class B splice

2. More than 1/2 of the bars are lap spliced within a required lap length.
Use Class C splice

II. Regions of low tensile stress or
Reinforcement provided > twice that required for strength.

1. No more than 3/4 of the bars are lap spliced within a required lap length.
Use Class A splice

2. More than 3/4 of the bars are lap spliced within a required lap length.
Use Class B splice

III. Assume all temperature and shrinkage reinforcement fully stressed. A Class B or Class C splice must be used depending on amount spliced within required splice length.

Tension Splices for Epoxy Coated Reinforcement in Normal Weight Concrete

f'c = 3,500 psi
fy = 60,000 psi

Basic Lap (including 1.5 Factor)

Bar Size	Class A		Class B		Class C	
	1.0 ld	0.8	1.3 ld	0.8	1.7 ld	0.8
#4	1'-6"	1'-3"	2'-0"	1'-7"	2'-7"	2'-1"
#5	1'-11"	1'-6"	2'-6"	2'-0"	3'-3"	2'-7"
#6	2'-3"	1'-10"	3'-0"	2'-5"	3'-10"	3'-1"
#7	3'-1"	2'-5"	3'-11"	3'-2"	5'-2"	4'-2"
#8	4'-0"	3'-3"	5'-2"	4'-2"	6'-9"	5'-5"
#9	5'-1"	4'-1"	6'-7"	5'-3"	8'-7"	6'-10"
#10	6'-5"	5'-2"	8'-4"	6'-8"	10'- 10"	8'-8"
#11	7'-10"	6'-4"	10'- 2"	8'-2"	13'- 4"	10'- 8"

Top Bars Lap *(1.4 x Basic Lap)*

Bar Size	Class A		Class B		Class C	
		0.8		0.8		0.8
#4	1'-9"	1'-5"	2'-3"	1'-10"	2'-11"	2'-4"
#5	2'-2"	1'-9"	2'-10"	2'-3"	3'-8"	2'-11"
#6	2'-7"	2'-1"	3'-4"	2'-8"	4'-5"	3'-6"
#7	3'-5"	2'-9"	4'-6"	3'-7"	5'-10"	4'-8"
#8	4'-6"	3'-8"	5'-10"	4'-8"	7'-8"	6'-2"
#9	5'-9"	4'-7"	7'-5"	5'-11"	9'-8"	7'-9"
#10	7'-3"	5'-10"	9'-5"	7'-7"	12'-4"	9'-10"
#11	8'-11"	7'-2"	11'-7"	9'-3"	15'-1"	12'-1"

Notes: Use 0.8 Multiplier when bars are spaced 6" or more apart and in 3" from side of member
Top bars are horizontal bars with more than 12" of concrete cast below.

Tension Splices for Unprotected Reinforcement in Normal Weight Concrete

f'c = 3,500 psi
fy = 60,000 psi

Basic Lap

Bar Size	Class A		Class B		Class C	
	1.0 ld	0.8	1.3 ld	0.8	1.7 ld	0.8
#4	1'-0"	1'-0"	1'-4"	1'-1"	1'-9"	1'-5"
#5	1'-3"	1'-0"	1'-8"	1'-4"	2'-2"	1'-9"
#6	1'-6"	1'-3"	2'-0"	1'-7"	2'-7"	2'-1"
#7	2'-1"	1'-8"	2'-8"	2'-2"	3'-5"	2'-9"
#8	2'-8"	2'-2"	3'-6"	2'-9"	4'-6"	3'-8"
#9	3'-5"	2'-9"	4'-5"	3'-6"	5'-9"	4'-7"
#10	4'-3"	3'-5"	5'-7"	4'-5"	7'-3"	5'-10"
#11	5'-3"	4'-3"	6'-10"	5'-6"	8'-11"	7'-2"

Top Bars Lap *(1.4 x Basic Lap)*

Bar Size	Class A		Class B		Class C	
		0.8		0.8		0.8
#4	1'-5"	1'-2"	1'-10"	1'-6"	2'-5"	1'-11"
#5	1'-9"	1'-5"	2'-4"	1'-10"	3'-0"	2'-5"
#6	2'-2"	1'-9"	2'-9"	2'-3"	3'-7"	2'-11"
#7	2'-10"	2'-3"	3'-8"	3'-0"	4'-10"	3'-10"
#8	3'-9"	3'-0"	4'-10"	3'-11"	6'-4"	5'-1"
#9	4'-9"	3'-9"	6'-1"	4'-11"	8'-0"	6'-5"
#10	6'-0"	4'-10"	7'-9"	6'-3"	10'-2"	8'-1"
#11	7'-4"	5'-11"	9'-6"	7'-8"	12'-5"	10'-0"

Notes: Use 0.8 Multiplier when bars are spaced 6" or more apart and in 3" from side of member
Top bars are horizontal bars with more than 12" of concrete cast below.

DECIMAL OF AN INCH AND OF A FOOT

Fractions of Inch or Foot		Inch Equivalents to Foot Fractions	Fractions of Inch or Foot		Inch Equivalents to Foot Fractions	Fractions of Inch or Foot		Inch Equivalents to Foot Fractions	Fractions of Inch or Foot		Inch Equivalents to Foot Fractions
	.0052	1/16		.2552	3 1/16		.5052	6 1/16		.7552	9 1/16
	.0104	1/8		.2604	3 1/8		.5104	6 1/8		.7604	9 1/8
1/64	.015625	3/16	17/64	.265625	3 3/16	33/64	.515625	6 3/16	49/64	.765625	9 3/16
	.0208	1/4		.2708	3 1/4		.5208	6 1/4		.7708	9 1/4
	.0260	5/16		.2760	3 5/16		.5260	6 5/16		.7760	9 5/16
1/32	.03125	3/8	9/32	.28125	3 3/8	17/32	.53125	6 3/8	25/32	.78125	9 3/8
	.0365	7/16		.2865	3 7/16		.5365	6 7/16		.7865	9 7/16
	.0417	1/2		.2917	3 1/2		.5417	6 1/2		.7917	9 1/2
3/64	.046875	9/16	19/64	.296875	3 9/16	35/64	.546875	6 9/16	51/64	.796875	9 9/16
	.0521	5/8		.3021	3 5/8		.5521	6 5/8		.8021	9 5/8
	.0573	11/16		.3073	3 11/16		.5573	6 11/16		.8073	9 11/16
1/16	.0625	3/4	5/16	.3125	3 3/4	9/16	.5625	6 3/4	13/16	.8125	9 3/4
	.0677	13/16		.3177	3 13/16		.5677	6 13/16		.8177	9 13/16
	.0729	7/8		.3229	3 7/8		.5729	6 7/8		.8229	9 7/8
5/64	.078125	15/16	21/64	.328125	3 15/16	37/64	.578125	6 15/16	53/64	.828125	9 15/16
	.0833	1		.3333	4		.5833	7		.8333	10
	.0885	1 1/16		.3385	4 1/16		.5885	7 1/16		.8385	10 1/16
3/32	.09375	1 1/8	11/32	.34375	4 1/8	19/32	.59375	7 1/8	27/32	.84375	10 1/8
	.0990	1 3/16		.3490	4 3/16		.5990	7 3/16		.8490	10 3/16
	.1042	1 1/4		.3542	4 1/4		.6042	7 1/4		.8542	10 1/4
7/64	.109375	1 5/16	23/64	.359375	4 5/16	39/64	.609375	7 5/16	55/64	.859375	10 5/16
	.1146	1 3/8		.3646	4 3/8		.6146	7 3/8		.8646	10 3/8
	.1198	1 7/16		.3698	4 7/16		.6198	7 7/16		.8698	10 7/16
1/8	.1250	1 1/2	3/8	.3750	4 1/2	5/8	.6250	7 1/2	7/8	.8750	10 1/2
	.1302	1 9/16		.3802	4 9/16		.6302	7 9/16		.8802	10 9/16
	.1354	1 5/8		.3854	4 5/8		.6354	7 5/8		.8854	10 5/8
9/64	.140625	1 11/16	25/64	.390625	4 11/16	41/64	.640625	7 11/16	57/64	.890625	10 11/16
	.1458	1 3/4		.3958	4 3/4		.6458	7 3/4		.8958	10 3/4
	.1510	1 13/16		.4010	4 13/16		.6510	7 13/16		.9010	10 13/16
5/32	.15625	1 7/8	13/32	.40625	4 7/8	21/32	.65625	7 7/8	29/32	.90625	10 7/8
	.1615	1 15/16		.4115	4 15/16		.6615	7 15/16		.9115	10 15/16
	.1667	2		.4167	5		.6667	8		.9167	11
11/64	.171875	2 1/16	27/64	.421875	5 1/16	43/64	.671875	8 1/16	59/64	.921875	11 1/16
	.1771	2 1/8		.4271	5 1/8		.6771	8 1/8		.9271	11 1/8
	.1823	2 3/16		.4323	5 3/16		.6823	8 3/16		.9323	11 3/16
3/16	.1875	2 1/4	7/16	.4375	5 1/4	11/16	.6875	8 1/4	15/16	.9375	11 1/4
	.1927	2 5/16		.4427	5 5/16		.6927	8 5/16		.9427	11 5/16
	.1979	2 3/8		.4479	5 3/8		.6979	8 3/8		.9479	11 3/8
13/64	.203125	2 7/16	29/64	.453125	5 7/16	45/64	.703125	8 7/16	61/64	.953125	11 7/16
	.2083	2 1/2		.4583	5 1/2		.7083	8 1/2		.9583	11 1/2
	.2135	2 9/16		.4635	5 9/16		.7135	8 9/16		.9635	11 9/16
7/32	.21875	2 5/8	15/32	.46875	5 5/8	23/32	.71875	8 5/8	31/32	.96875	11 5/8
	.2240	2 11/16		.4740	5 11/16		.7240	8 11/16		.9740	11 11/16
	.2292	2 3/4		.4792	5 3/4		.7292	8 3/4		.9792	11 3/4
15/64	.234375	2 13/16	31/64	.484375	5 13/16	47/64	.734375	8 13/16	63/64	.984375	11 13/16
	.2396	2 7/8		.4896	5 7/8		.7396	8 7/8		.9896	11 7/8
	.2448	2 15/16		.4948	5 15/16		.7448	8 15/16		.9948	11 15/16
1/4	.2500	3	1/2	.5000	6	3/4	.7500	9	1	1.0000	12

Weight of Rectangular Steel Sections

(Pounds per Linear Foot)

Coeff.	1.0300	1.0300	1.0300	1.0300	1.0250	1.0225	1.0200	1.0200
				Thickness (in.)				
	0.0625	0.125	0.1875	0.25	0.3125	0.375	0.4375	0.5
Width (in.)								
6.25	1.37	2.74	4.11	5.48	6.81	8.15	9.49	10.85
6.50	1.42	2.85	4.27	5.70	7.08	8.48	9.87	11.28
6.75	1.48	2.96	4.44	5.91	7.36	8.81	10.25	11.71
7.00	1.53	3.07	4.60	6.13	7.63	9.13	10.63	12.15
7.25	1.59	3.18	4.76	6.35	7.90	9.46	11.01	12.58
7.50	1.64	3.29	4.93	6.57	8.17	9.79	11.39	13.02
7.75	1.70	3.40	5.09	6.79	8.45	10.11	11.77	13.45
8.00	1.75	3.50	5.26	7.01	8.72	10.44	12.15	13.88
8.25	1.81	3.61	5.42	7.23	8.99	10.76	12.53	14.32
8.50	1.86	3.72	5.59	7.45	9.26	11.09	12.91	14.75
8.75	1.92	3.83	5.75	7.67	9.54	11.42	13.29	15.18
9.00	1.97	3.94	5.91	7.89	9.81	11.74	13.67	15.62
9.25	2.03	4.05	6.08	8.10	10.08	12.07	14.05	16.05
9.50	2.08	4.16	6.24	8.32	10.35	12.40	14.43	16.49
9.75	2.14	4.27	6.41	8.54	10.63	12.72	14.81	16.92
10.00	2.19	4.38	6.57	8.76	10.90	13.05	15.18	17.35
10.25	2.25	4.49	6.74	8.98	11.17	13.37	15.56	17.79
10.50	2.30	4.60	6.90	9.20	11.44	13.70	15.94	18.22
10.75	2.35	4.71	7.06	9.42	11.72	14.03	16.32	18.66
11.00	2.41	4.82	7.23	9.64	11.99	14.35	16.70	19.09
11.25	2.46	4.93	7.39	9.86	12.26	14.68	17.08	19.52
11.50	2.52	5.04	7.56	10.08	12.53	15.00	17.46	19.96
11.75	2.57	5.15	7.72	10.30	12.81	15.33	17.84	20.39
12.00	2.63	5.26	7.89	10.51	13.08	15.66	18.22	20.83
12.50	2.74	5.48	8.21	10.95	13.62	16.31	18.98	21.69
13.00	2.85	5.70	8.54	11.39	14.17	16.96	19.74	22.56
13.50	2.96	5.91	8.87	11.83	14.71	17.61	20.50	23.43
14.00	3.07	6.13	9.20	12.27	15.26	18.27	21.26	24.30
14.50	3.18	6.35	9.53	12.71	15.80	18.92	22.02	25.16
15.00	3.29	6.57	9.86	13.14	16.35	19.57	22.78	26.03
15.50	3.40	6.79	10.19	13.58	16.89	20.22	23.54	26.90
16.00	3.50	7.01	10.51	14.02	17.44	20.88	24.30	27.77
16.50	3.61	7.23	10.84	14.46	17.98	21.53	25.06	28.63
17.00	3.72	7.45	11.17	14.90	18.53	22.18	25.81	29.50
17.50	3.83	7.67	11.50	15.33	19.07	22.83	26.57	30.37
18.00	3.94	7.89	11.83	15.77	19.62	23.49	27.33	31.24
18.50	4.05	8.10	12.16	16.21	20.16	24.14	28.09	32.11
19.00	4.16	8.32	12.49	16.65	20.71	24.79	28.85	32.97
19.50	4.27	8.54	12.81	17.09	21.25	25.44	29.61	33.84
20.00	4.38	8.76	13.14	17.52	21.80	26.10	30.37	34.71
20.50	4.49	8.98	13.47	17.96	22.34	26.75	31.13	35.58
21.00	4.60	9.20	13.80	18.40	22.89	27.40	31.89	36.44
21.50	4.71	9.42	14.13	18.84	23.43	28.05	32.65	37.31
22.00	4.82	9.64	14.46	19.28	23.98	28.70	33.41	38.18
22.50	4.93	9.86	14.79	19.71	24.52	29.36	34.17	39.05
23.00	5.04	10.08	15.11	20.15	25.07	30.01	34.93	39.91
23.50	5.15	10.30	15.44	20.59	25.61	30.66	35.68	40.78

Weight of Rectangular Steel Sections

(Pounds per Linear Foot)

Coeff.	1.0300	1.0300	1.0300	1.0300	1.0250	1.0225	1.0200	1.0200
				Thickness (in.)				
	0.0625	0.125	0.1875	0.25	0.3125	0.375	0.4375	0.5
Width (in.)								
24.00	5.26	10.51	15.77	21.03	26.16	31.31	36.44	41.65
25.00	5.48	10.95	16.43	21.91	27.25	32.62	37.96	43.39
26.00	5.70	11.39	17.09	22.78	28.34	33.92	39.48	45.12
27.00	5.91	11.83	17.74	23.66	29.43	35.23	41.00	46.86
28.00	6.13	12.27	18.40	24.53	30.52	36.53	42.52	48.59
29.00	6.35	12.71	19.06	25.41	31.61	37.84	44.04	50.33
30.00	6.57	13.14	19.71	26.29	32.70	39.14	45.55	52.06
31.00	6.79	13.58	20.37	27.16	33.79	40.45	47.07	53.80
32.00	7.01	14.02	21.03	28.04	34.88	41.75	48.59	55.53
33.00	7.23	14.46	21.69	28.92	35.97	43.06	50.11	57.27
34.00	7.45	14.90	22.34	29.79	37.06	44.36	51.63	59.00
35.00	7.67	15.33	23.00	30.67	38.15	45.67	53.15	60.74
36.00	7.89	15.77	23.66	31.54	39.24	46.97	54.67	62.48
37.00	8.10	16.21	24.31	32.42	40.33	48.28	56.18	64.21
38.00	8.32	16.65	24.97	33.30	41.42	49.58	57.70	65.95
39.00	8.54	17.09	25.63	34.17	42.51	50.89	59.22	67.68
40.00	8.76	17.52	26.29	35.05	43.60	52.19	60.74	69.42
41.00	8.98	17.96	26.94	35.92	44.69	53.49	62.26	71.15
42.00	9.20	18.40	27.60	36.80	45.78	54.80	63.78	72.89
43.00	9.42	18.84	28.26	37.68	46.87	56.10	65.30	74.62
44.00	9.64	19.28	28.92	38.55	47.96	57.41	66.81	76.36
45.00	9.86	19.71	29.57	39.43	49.05	58.71	68.33	78.09
46.00	10.08	20.15	30.23	40.31	50.14	60.02	69.85	79.83
47.00	10.30	20.59	30.89	41.18	51.23	61.32	71.37	81.56
48.00	10.51	21.03	31.54	42.06	52.32	62.63	72.89	83.30
COEFF.	1.035	1.035	1.035	1.03	1.03	1.025	1.0225	1.02
49.00	10.79	21.57	32.36	42.93	53.67	64.09	74.59	85.04
50.00	11.01	22.01	33.02	43.81	54.76	65.40	76.11	86.77
51.00	11.23	22.45	33.68	44.69	55.86	66.71	77.63	88.51
52.00	11.45	22.89	34.34	45.56	56.95	68.01	79.15	90.24
53.00	11.67	23.33	35.00	46.44	58.05	69.32	80.68	91.98
54.00	11.89	23.77	35.66	47.32	59.14	70.63	82.20	93.71
55.00	12.11	24.21	36.32	48.19	60.24	71.94	83.72	95.45
56.00	12.33	24.65	36.98	49.07	61.34	73.24	85.24	97.18
57.00	12.55	25.09	37.64	49.94	62.43	74.55	86.77	98.92
58.00	12.77	25.53	38.30	50.82	63.53	75.86	88.29	100.65
59.00	12.99	25.97	38.96	51.70	64.62	77.17	89.81	102.39

Weight of Rectangular Steel Sections

(Pounds per Linear Foot)

Coeff.	1.0200	1.0200	1.0200	1.0175	1.0175	1.0175	1.0175	1.0175
				Thickness (in.)				
	0.5625	0.625	0.6875	0.75	0.8125	0.875	0.9375	1.0
Width (in.)								
6.25	12.20	13.56	14.91	16.23	17.58	18.93	20.29	21.64
6.50	12.69	14.10	15.51	16.88	18.29	19.69	21.10	22.51
6.75	13.18	14.64	16.11	17.53	18.99	20.45	21.91	23.37
7.00	13.67	15.18	16.70	18.18	19.69	21.21	22.72	24.24
7.25	14.15	15.73	17.30	18.83	20.40	21.96	23.53	25.10
7.50	14.64	16.27	17.90	19.48	21.10	22.72	24.34	25.97
7.75	15.13	16.81	18.49	20.12	21.80	23.48	25.16	26.83
8.00	15.62	17.35	19.09	20.77	22.51	24.24	25.97	27.70
8.25	16.11	17.90	19.69	21.42	23.21	24.99	26.78	28.56
8.50	16.59	18.44	20.28	22.07	23.91	25.75	27.59	29.43
8.75	17.08	18.98	20.88	22.72	24.61	26.51	28.40	30.30
9.00	17.57	19.52	21.48	23.37	25.32	27.27	29.21	31.16
9.25	18.06	20.07	22.07	24.02	26.02	28.02	30.02	32.03
9.50	18.55	20.61	22.67	24.67	26.72	28.78	30.84	32.89
9.75	19.04	21.15	23.27	25.32	27.43	29.54	31.65	33.76
10.00	19.52	21.69	23.86	25.97	28.13	30.30	32.46	34.62
10.25	20.01	22.24	24.46	26.62	28.83	31.05	33.27	35.49
10.50	20.50	22.78	25.06	27.27	29.54	31.81	34.08	36.35
10.75	20.99	23.32	25.65	27.92	30.24	32.57	34.89	37.22
11.00	21.48	23.86	26.25	28.56	30.94	33.32	35.71	38.09
11.25	21.96	24.40	26.84	29.21	31.65	34.08	36.52	38.95
11.50	22.45	24.95	27.44	29.86	32.35	34.84	37.33	39.82
11.75	22.94	25.49	28.04	30.51	33.05	35.60	38.14	40.68
12.00	23.43	26.03	28.63	31.16	33.76	36.35	38.95	41.55
12.50	24.40	27.12	29.83	32.46	35.16	37.87	40.57	43.28
13.00	25.38	28.20	31.02	33.76	36.57	39.38	42.20	45.01
13.50	26.36	29.29	32.21	35.06	37.98	40.90	43.82	46.74
14.00	27.33	30.37	33.41	36.35	39.38	42.41	45.44	48.47
14.50	28.31	31.45	34.60	37.65	40.79	43.93	47.07	50.20
15.00	29.29	32.54	35.79	38.95	42.20	45.44	48.69	51.93
15.50	30.26	33.62	36.99	40.25	43.60	46.96	50.31	53.67
16.00	31.24	34.71	38.18	41.55	45.01	48.47	51.93	55.40
16.50	32.21	35.79	39.37	42.85	46.42	49.99	53.56	57.13
17.00	33.19	36.88	40.57	44.14	47.82	51.50	55.18	58.86
17.50	34.17	37.96	41.76	45.44	49.23	53.02	56.80	60.59
18.00	35.14	39.05	42.95	46.74	50.64	54.53	58.43	62.32
18.50	36.12	40.13	44.14	48.04	52.04	56.05	60.05	64.05
19.00	37.09	41.22	45.34	49.34	53.45	57.56	61.67	65.78
19.50	38.07	42.30	46.53	50.64	54.86	59.08	63.30	67.52
20.00	39.05	43.39	47.72	51.93	56.26	60.59	64.92	69.25
20.50	40.02	44.47	48.92	53.23	57.67	62.11	66.54	70.98
21.00	41.00	45.55	50.11	54.53	59.08	63.62	68.16	72.71
21.50	41.98	46.64	51.30	55.83	60.48	65.14	69.79	74.44
22.00	42.95	47.72	52.50	57.13	61.89	66.65	71.41	76.17
22.50	43.93	48.81	53.69	58.43	63.30	68.16	73.03	77.90
23.00	44.90	49.89	54.88	59.73	64.70	69.68	74.66	79.63
23.50	45.88	50.98	56.08	61.02	66.11	71.19	76.28	81.36

Weight of Rectangular Steel Sections

(Pounds per Linear Foot)

Coeff.	1.0200	1.0200	1.0200	1.0175	1.0175	1.0175	1.0175	1.0175
				Thickness (in.)				
	0.5625	0.625	0.6875	0.75	0.8125	0.875	0.9375	1.0
Width (in.)								
24.00	46.86	52.06	57.27	62.32	67.52	72.71	77.90	83.10
25.00	48.81	54.23	59.65	64.92	70.33	75.74	81.15	86.56
26.00	50.76	56.40	62.04	67.52	73.14	78.77	84.39	90.02
27.00	52.71	58.57	64.43	70.11	75.95	81.80	87.64	93.48
28.00	54.67	60.74	66.81	72.71	78.77	84.83	90.89	96.95
29.00	56.62	62.91	69.20	75.31	81.58	87.86	94.13	100.41
30.00	58.57	65.08	71.59	77.90	84.39	90.89	97.38	103.87
31.00	60.52	67.25	73.97	80.50	87.21	93.92	100.62	107.33
32.00	62.48	69.42	76.36	83.10	90.02	96.95	103.87	110.79
33.00	64.43	71.59	78.74	85.69	92.83	99.97	107.12	114.26
34.00	66.38	73.76	81.13	88.29	95.65	103.00	110.36	117.72
35.00	68.33	75.92	83.52	90.89	98.46	106.03	113.61	121.18
36.00	70.28	78.09	85.90	93.48	101.27	109.06	116.85	124.64
37.00	72.24	80.26	88.29	96.08	104.09	112.09	120.10	128.11
38.00	74.19	82.43	90.68	98.68	106.90	115.12	123.35	131.57
39.00	76.14	84.60	93.06	101.27	109.71	118.15	126.59	135.03
40.00	78.09	86.77	95.45	103.87	112.53	121.18	129.84	138.49
41.00	80.05	88.94	97.83	106.47	115.34	124.21	133.08	141.96
42.00	82.00	91.11	100.22	109.06	118.15	127.24	136.33	145.42
43.00	83.95	93.28	102.61	111.66	120.97	130.27	139.58	148.88
44.00	85.90	95.45	104.99	114.26	123.78	133.30	142.82	152.34
45.00	87.86	97.62	107.38	116.85	126.59	136.33	146.07	155.80
46.00	89.81	99.79	109.77	119.45	129.40	139.36	149.31	159.27
47.00	91.76	101.96	112.15	122.05	132.22	142.39	152.56	162.73
48.00	93.71	104.13	114.54	124.64	135.03	145.42	155.80	166.19
COEFF.	1.02	1.02	1.02	1.02	1.02	1.02	1.02	1.0175
49.00	95.66	106.29	116.92	127.55	138.18	148.81	159.44	169.65
50.00	97.62	108.46	119.31	130.16	141.00	151.85	162.70	173.12
51.00	99.57	110.63	121.70	132.76	143.82	154.89	165.95	176.58
52.00	101.52	112.80	124.08	135.36	146.64	157.92	169.20	180.04
53.00	103.47	114.97	126.47	137.97	149.46	160.96	172.46	183.50
54.00	105.43	117.14	128.85	140.57	152.28	164.00	175.71	186.97
55.00	107.38	119.31	131.24	143.17	155.10	167.03	178.96	190.43
56.00	109.33	121.48	133.63	145.78	157.92	170.07	182.22	193.89
57.00	111.28	123.65	136.01	148.38	160.74	173.11	185.47	197.35
58.00	113.24	125.82	138.40	150.98	163.56	176.14	188.73	200.81
59.00	115.19	127.99	140.79	153.58	166.38	179.18	191.98	204.28

Weight of Rectangular Steel Sections

(Pounds per Linear Foot)

Coeff.	1.0175	1.0175	1.0175	1.0175	1.0175	1.0175	1.0175	1.0175
				Thickness (in.)				
	1.125	1.25	1.375	1.50	1.625	1.75	1.875	2.0
Width (in.)								
6.25	24.34	27.05	29.75	32.46	35.16	37.87	40.57	43.28
6.50	25.32	28.13	30.94	33.76	36.57	39.38	42.20	45.01
6.75	26.29	29.21	32.13	35.06	37.98	40.90	43.82	46.74
7.00	27.27	30.30	33.32	36.35	39.38	42.41	45.44	48.47
7.25	28.24	31.38	34.52	37.65	40.79	43.93	47.07	50.20
7.50	29.21	32.46	35.71	38.95	42.20	45.44	48.69	51.93
7.75	30.19	33.54	36.90	40.25	43.60	46.96	50.31	53.67
8.00	31.16	34.62	38.09	41.55	45.01	48.47	51.93	55.40
8.25	32.13	35.71	39.28	42.85	46.42	49.99	53.56	57.13
8.50	33.11	36.79	40.47	44.14	47.82	51.50	55.18	58.86
8.75	34.08	37.87	41.66	45.44	49.23	53.02	56.80	60.59
9.00	35.06	38.95	42.85	46.74	50.64	54.53	58.43	62.32
9.25	36.03	40.03	44.04	48.04	52.04	56.05	60.05	64.05
9.50	37.00	41.12	45.23	49.34	53.45	57.56	61.67	65.78
9.75	37.98	42.20	46.42	50.64	54.86	59.08	63.30	67.52
10.00	38.95	43.28	47.61	51.93	56.26	60.59	64.92	69.25
10.25	39.92	44.36	48.80	53.23	57.67	62.11	66.54	70.98
10.50	40.90	45.44	49.99	54.53	59.08	63.62	68.16	72.71
10.75	41.87	46.53	51.18	55.83	60.48	65.14	69.79	74.44
11.00	42.85	47.61	52.37	57.13	61.89	66.65	71.41	76.17
11.25	43.82	48.69	53.56	58.43	63.30	68.16	73.03	77.90
11.50	44.79	49.77	54.75	59.73	64.70	69.68	74.66	79.63
11.75	45.77	50.85	55.94	61.02	66.11	71.19	76.28	81.36
12.00	46.74	51.93	57.13	62.32	67.52	72.71	77.90	83.10
12.50	48.69	54.10	59.51	64.92	70.33	75.74	81.15	86.56
13.00	50.64	56.26	61.89	67.52	73.14	78.77	84.39	90.02
13.50	52.58	58.43	64.27	70.11	75.95	81.80	87.64	93.48
14.00	54.53	60.59	66.65	72.71	78.77	84.83	90.89	96.95
14.50	56.48	62.75	69.03	75.31	81.58	87.86	94.13	100.41
15.00	58.43	64.92	71.41	77.90	84.39	90.89	97.38	103.87
15.50	60.37	67.08	73.79	80.50	87.21	93.92	100.62	107.33
16.00	62.32	69.25	76.17	83.10	90.02	96.95	103.87	110.79
16.50	64.27	71.41	78.55	85.69	92.83	99.97	107.12	114.26
17.00	66.22	73.57	80.93	88.29	95.65	103.00	110.36	117.72
17.50	68.16	75.74	83.31	90.89	98.46	106.03	113.61	121.18
18.00	70.11	77.90	85.69	93.48	101.27	109.06	116.85	124.64
18.50	72.06	80.07	88.07	96.08	104.09	112.09	120.10	128.11
19.00	74.01	82.23	90.45	98.68	106.90	115.12	123.35	131.57
19.50	75.95	84.39	92.83	101.27	109.71	118.15	126.59	135.03
20.00	77.90	86.56	95.21	103.87	112.53	121.18	129.84	138.49
20.50	79.85	88.72	97.59	106.47	115.34	124.21	133.08	141.96
21.00	81.80	90.89	99.97	109.06	118.15	127.24	136.33	145.42
21.50	83.75	93.05	102.36	111.66	120.97	130.27	139.58	148.88
22.00	85.69	95.21	104.74	114.26	123.78	133.30	142.82	152.34
22.50	87.64	97.38	107.12	116.85	126.59	136.33	146.07	155.80
23.00	89.59	99.54	109.50	119.45	129.40	139.36	149.31	159.27
23.50	91.54	101.71	111.88	122.05	132.22	142.39	152.56	162.73

Weight of Rectangular Steel Sections

(Pounds per Linear Foot)

Coeff.	1.0175	1.0175	1.0175	1.0175	1.0175	1.0175	1.0175	1.0175
				Thickness (in.)				
	1.125	1.25	1.375	1.50	1.625	1.75	1.875	2.0
Width (in.)								
24.00	93.48	103.87	114.26	124.64	135.03	145.42	155.80	166.19
24.50	95.43	106.03	116.64	127.24	137.84	148.45	159.05	169.65
25.00	97.38	108.20	119.02	129.84	140.66	151.48	162.30	173.12
25.50	99.32	110.36	121.40	132.43	143.47	154.51	165.54	176.58
26.00	101.27	112.53	123.78	135.03	146.28	157.54	168.79	180.04

Weight of Rectangular Steel Sections

(Pounds per Linear Foot)

Coeff.	1.0175	1.0175	1.0175	1.0175	1.0175	1.0175	1.0175	1.0175
				Thickness (in.)				
Width (in.)	2.125	2.25	2.375	2.50	2.625	2.75	2.875	3.0
6.25	45.98	48.69	51.39	54.10	56.80	59.51	62.21	64.92
6.50	47.82	50.64	53.45	56.26	59.08	61.89	64.70	67.52
6.75	49.66	52.58	55.51	58.43	61.35	64.27	67.19	70.11
7.00	51.50	54.53	57.56	60.59	63.62	66.65	69.68	72.71
7.25	53.34	56.48	59.62	62.75	65.89	69.03	72.17	75.31
7.50	55.18	58.43	61.67	64.92	68.16	71.41	74.66	77.90
7.75	57.02	60.37	63.73	67.08	70.44	73.79	77.14	80.50
8.00	58.86	62.32	65.78	69.25	72.71	76.17	79.63	83.10
8.25	60.70	64.27	67.84	71.41	74.98	78.55	82.12	85.69
8.50	62.54	66.22	69.90	73.57	77.25	80.93	84.61	88.29
8.75	64.38	68.16	71.95	75.74	79.53	83.31	87.10	90.89
9.00	66.22	70.11	74.01	77.90	81.80	85.69	89.59	93.48
9.25	68.06	72.06	76.06	80.07	84.07	88.07	92.08	96.08
9.50	69.90	74.01	78.12	82.23	86.34	90.45	94.56	98.68
9.75	71.74	75.95	80.17	84.39	88.61	92.83	97.05	101.27
10.00	73.57	77.90	82.23	86.56	90.89	95.21	99.54	103.87
10.25	75.41	79.85	84.29	88.72	93.16	97.59	102.03	106.47
10.50	77.25	81.80	86.34	90.89	95.43	99.97	104.52	109.06
10.75	79.09	83.75	88.40	93.05	97.70	102.36	107.01	111.66
11.00	80.93	85.69	90.45	95.21	99.97	104.74	109.50	114.26
11.25	82.77	87.64	92.51	97.38	102.25	107.12	111.98	116.85
11.50	84.61	89.59	94.56	99.54	104.52	109.50	114.47	119.45
11.75	86.45	91.54	96.62	101.71	106.79	111.88	116.96	122.05
12.00	88.29	93.48	98.68	103.87	109.06	114.26	119.45	124.64
12.50	91.97	97.38	102.79	108.20	113.61	119.02	124.43	129.84
13.00	95.65	101.27	106.90	112.53	118.15	123.78	129.40	135.03
13.50	99.33	105.17	111.01	116.85	122.70	128.54	134.38	140.22
14.00	103.00	109.06	115.12	121.18	127.24	133.30	139.36	145.42
14.50	106.68	112.96	119.23	125.51	131.78	138.06	144.34	150.61
15.00	110.36	116.85	123.35	129.84	136.33	142.82	149.31	155.80
15.50	114.04	120.75	127.46	134.17	140.87	147.58	154.29	161.00
16.00	117.72	124.64	131.57	138.49	145.42	152.34	159.27	166.19
16.50	121.40	128.54	135.68	142.82	149.96	157.10	164.24	171.39
17.00	125.08	132.43	139.79	147.15	154.51	161.86	169.22	176.58
17.50	128.76	136.33	143.90	151.48	159.05	166.62	174.20	181.77
18.00	132.43	140.22	148.01	155.80	163.59	171.39	179.18	186.97
18.50	136.11	144.12	152.13	160.13	168.14	176.15	184.15	192.16
19.00	139.79	148.01	156.24	164.46	172.68	180.91	189.13	197.35
19.50	143.47	151.91	160.35	168.79	177.23	185.67	194.11	202.55
20.00	147.15	155.80	164.46	173.12	181.77	190.43	199.08	207.74
20.50	150.83	159.70	168.57	177.44	186.32	195.19	204.06	212.93
21.00	154.51	163.59	172.68	181.77	190.86	199.95	209.04	218.13
21.50	158.19	167.49	176.80	186.10	195.41	204.71	214.02	223.32
22.00	161.86	171.39	180.91	190.43	199.95	209.47	218.99	228.51
22.50	165.54	175.28	185.02	194.76	204.49	214.23	223.97	233.71
23.00	169.22	179.18	189.13	199.08	209.04	218.99	228.95	238.90
23.50	172.90	183.07	193.24	203.41	213.58	223.75	233.92	244.09

Weight of Rectangular Steel Sections

(Pounds per Linear Foot)

Coeff.	1.0175	1.0175	1.0175	1.0175	1.0175	1.0175	1.0175	1.0175
				Thickness (in.)				
	2.125	2.25	2.375	2.50	2.625	2.75	2.875	3.0
Width (in.)								
24.00	176.58	186.97	197.35	207.74	218.13	228.51	238.90	249.29
24.50	180.26	190.86	201.46	212.07	222.67	233.27	243.88	254.48
25.00	183.94	194.76	205.58	216.40	227.22	238.03	248.85	259.67
25.50	187.61	198.65	209.69	220.72	231.76	242.79	253.83	264.87
26.00	191.29	202.55	213.80	225.05	236.30	247.56	258.81	270.06

Weight of Rectangular Steel Sections

(Pounds per Linear Foot)

Coeff.	1.0175	1.0175	1.0175	1.0175	1.0175	1.0175	1.0175	1.0150
				Thickness (in.)				
	3.125	3.25	3.375	3.50	3.625	3.75	3.875	4.0
Width (in.)								
6.25	67.62	70.33	73.03	75.74	78.44	81.15	83.85	86.35
6.50	70.33	73.14	75.95	78.77	81.58	84.39	87.21	89.80
6.75	73.03	75.95	78.88	81.80	84.72	87.64	90.56	93.25
7.00	75.74	78.77	81.80	84.83	87.86	90.89	93.92	96.71
7.25	78.44	81.58	84.72	87.86	90.99	94.13	97.27	100.16
7.50	81.15	84.39	87.64	90.89	94.13	97.38	100.62	103.61
7.75	83.85	87.21	90.56	93.92	97.27	100.62	103.98	107.07
8.00	86.56	90.02	93.48	96.95	100.41	103.87	107.33	110.52
8.25	89.26	92.83	96.40	99.97	103.55	107.12	110.69	113.98
8.50	91.97	95.65	99.33	103.00	106.68	110.36	114.04	117.43
8.75	94.67	98.46	102.25	106.03	109.82	113.61	117.39	120.88
9.00	97.38	101.27	105.17	109.06	112.96	116.85	120.75	124.34
9.25	100.08	104.09	108.09	112.09	116.10	120.10	124.10	127.79
9.50	102.79	106.90	111.01	115.12	119.23	123.35	127.46	131.25
9.75	105.49	109.71	113.93	118.15	122.37	126.59	130.81	134.70
10.00	108.20	112.53	116.85	121.18	125.51	129.84	134.17	138.15
10.25	110.90	115.34	119.77	124.21	128.65	133.08	137.52	141.61
10.50	113.61	118.15	122.70	127.24	131.78	136.33	140.87	145.06
10.75	116.31	120.97	125.62	130.27	134.92	139.58	144.23	148.51
11.00	119.02	123.78	128.54	133.30	138.06	142.82	147.58	151.97
11.25	121.72	126.59	131.46	136.33	141.20	146.07	150.94	155.42
11.50	124.43	129.40	134.38	139.36	144.34	149.31	154.29	158.88
11.75	127.13	132.22	137.30	142.39	147.47	152.56	157.64	162.33
12.00	129.84	135.03	140.22	145.42	150.61	155.80	161.00	165.78
12.50	135.25	140.66	146.07	151.48	156.89	162.30	167.71	172.69
13.00	140.66	146.28	151.91	157.54	163.16	168.79	174.41	179.60
13.50	146.07	151.91	157.75	163.59	169.44	175.28	181.12	186.51
14.00	151.48	157.54	163.59	169.65	175.71	181.77	187.83	193.41
14.50	156.89	163.16	169.44	175.71	181.99	188.26	194.54	200.32
15.00	162.30	168.79	175.28	181.77	188.26	194.76	201.25	207.23
15.50	167.71	174.41	181.12	187.83	194.54	201.25	207.96	214.14
16.00	173.12	180.04	186.97	193.89	200.81	207.74	214.66	221.04
16.50	178.53	185.67	192.81	199.95	207.09	214.23	221.37	227.95
17.00	183.94	191.29	198.65	206.01	213.37	220.72	228.08	234.86
17.50	189.35	196.92	204.49	212.07	219.64	227.22	234.79	241.77
18.00	194.76	202.55	210.34	218.13	225.92	233.71	241.50	248.68
18.50	200.17	208.17	216.18	224.19	232.19	240.20	248.21	255.58
19.00	205.58	213.80	222.02	230.24	238.47	246.69	254.91	262.49
19.50	210.99	219.42	227.86	236.30	244.74	253.18	261.62	269.40
20.00	216.40	225.05	233.71	242.36	251.02	259.67	268.33	276.31
20.50	221.81	230.68	239.55	248.42	257.29	266.17	275.04	283.21
21.00	227.22	236.30	245.39	254.48	263.57	272.66	281.75	290.12
21.50	232.63	241.93	251.24	260.54	269.85	279.15	288.46	297.03
22.00	238.03	247.56	257.08	266.60	276.12	285.64	295.16	303.94
22.50	243.44	253.18	262.92	272.66	282.40	292.13	301.87	310.84
23.00	248.85	258.81	268.76	278.72	288.67	298.63	308.58	317.75
23.50	254.26	264.44	274.61	284.78	294.95	305.12	315.29	324.66

Weight of Rectangular Steel Sections

(Pounds per Linear Foot)

Coeff.	1.0175	1.0175	1.0175	1.0175	1.0175	1.0175	1.0175	1.0150
				Thickness (in.)				
Width (in.)	3.125	3.25	3.375	3.50	3.625	3.75	3.875	4.0
24.00	259.67	270.06	280.45	290.84	301.22	311.61	322.00	331.57
24.50	265.08	275.69	286.29	296.89	307.50	318.10	328.70	338.47
25.00	270.49	281.31	292.13	302.95	313.77	324.59	335.41	345.38
25.50	275.90	286.94	297.97	309.01	320.05	331.08	342.12	352.29
26.00	281.31	292.57	303.82	315.07	326.32	337.58	348.83	359.20

Weight of Rectangular Steel Sections

(Pounds per Linear Foot)

Coeff.	1.0150	1.0150	1.0150	1.0150	1.0150	1.0150	1.0150	1.0150
				Thickness (in.)				
	4.125	4.25	4.375	4.50	4.625	4.75	4.875	5.0
Width (in.)								
6.25	89.04	91.74	94.44	97.14	99.84	102.54	105.23	107.93
6.50	92.61	95.41	98.22	101.02	103.83	106.64	109.44	112.25
6.75	96.17	99.08	102.00	104.91	107.82	110.74	113.65	116.57
7.00	99.73	102.75	105.77	108.80	111.82	114.84	117.86	120.88
7.25	103.29	106.42	109.55	112.68	115.81	118.94	122.07	125.20
7.50	106.85	110.09	113.33	116.57	119.80	123.04	126.28	129.52
7.75	110.41	113.76	117.11	120.45	123.80	127.14	130.49	133.84
8.00	113.98	117.43	120.88	124.34	127.79	131.25	134.70	138.15
8.25	117.54	121.10	124.66	128.22	131.78	135.35	138.91	142.47
8.50	121.10	124.77	128.44	132.11	135.78	139.45	143.12	146.79
8.75	124.66	128.44	132.22	135.99	139.77	143.55	147.33	151.10
9.00	128.22	132.11	135.99	139.88	143.77	147.65	151.54	155.42
9.25	131.78	135.78	139.77	143.77	147.76	151.75	155.75	159.74
9.50	135.35	139.45	143.55	147.65	151.75	155.85	159.96	164.06
9.75	138.91	143.12	147.33	151.54	155.75	159.96	164.16	168.37
10.00	142.47	146.79	151.10	155.42	159.74	164.06	168.37	172.69
10.25	146.03	150.46	154.88	159.31	163.73	168.16	172.58	177.01
10.50	149.59	154.13	158.66	163.19	167.73	172.26	176.79	181.33
10.75	153.16	157.80	162.44	167.08	171.72	176.36	181.00	185.64
11.00	156.72	161.47	166.22	170.96	175.71	180.46	185.21	189.96
11.25	160.28	165.14	169.99	174.85	179.71	184.56	189.42	194.28
11.50	163.84	168.81	173.77	178.74	183.70	188.66	193.63	198.59
11.75	167.40	172.48	177.55	182.62	187.69	192.77	197.84	202.91
12.00	170.96	176.14	181.33	186.51	191.69	196.87	202.05	207.23
12.50	178.09	183.48	188.88	194.28	199.67	205.07	210.47	215.86
13.00	185.21	190.82	196.44	202.05	207.66	213.27	218.89	224.50
13.50	192.33	198.16	203.99	209.82	215.65	221.48	227.30	233.13
14.00	199.46	205.50	211.55	217.59	223.63	229.68	235.72	241.77
14.50	206.58	212.84	219.10	225.36	231.62	237.88	244.14	250.40
15.00	213.71	220.18	226.66	233.13	239.61	246.08	252.56	259.04
15.50	220.83	227.52	234.21	240.90	247.60	254.29	260.98	267.67
16.00	227.95	234.86	241.77	248.68	255.58	262.49	269.40	276.31
16.50	235.08	242.20	249.32	256.45	263.57	270.69	277.82	284.94
17.00	242.20	249.54	256.88	264.22	271.56	278.90	286.24	293.57
17.50	249.32	256.88	264.43	271.99	279.54	287.10	294.65	302.21
18.00	256.45	264.22	271.99	279.76	287.53	295.30	303.07	310.84
18.50	263.57	271.56	279.54	287.53	295.52	303.50	311.49	319.48
19.00	270.69	278.90	287.10	295.30	303.50	311.71	319.91	328.11
19.50	277.82	286.24	294.65	303.07	311.49	319.91	328.33	336.75
20.00	284.94	293.57	302.21	310.84	319.48	328.11	336.75	345.38
20.50	292.06	300.91	309.76	318.61	327.47	336.32	345.17	354.02
21.00	299.19	308.25	317.32	326.39	335.45	344.52	353.58	362.65
21.50	306.31	315.59	324.87	334.16	343.44	352.72	362.00	371.29
22.00	313.43	322.93	332.43	341.93	351.43	360.92	370.42	379.92
22.50	320.56	330.27	339.99	349.70	359.41	369.13	378.84	388.55
23.00	327.68	337.61	347.54	357.47	367.40	377.33	387.26	397.19
23.50	334.80	344.95	355.10	365.24	375.39	385.53	395.68	405.82

Weight of Rectangular Steel Sections

(Pounds per Linear Foot)

Coeff.	1.0150	1.0150	1.0150	1.0150	1.0150	1.0150	1.0150	1.0150
				Thickness (in.)				
	4.125	4.25	4.375	4.50	4.625	4.75	4.875	5.0
Width (in.)								
24.00	341.93	352.29	362.65	373.01	383.37	393.74	404.10	414.46
24.50	349.05	359.63	370.20	380.78	391.36	401.94	412.51	423.09
25.00	356.18	366.97	377.76	388.55	399.35	410.14	420.93	431.73
25.50	363.30	374.30	385.32	396.32	407.33	418.34	429.35	440.36
26.00	370.42	381.65	392.87	404.10	415.32	426.55	437.77	449.00

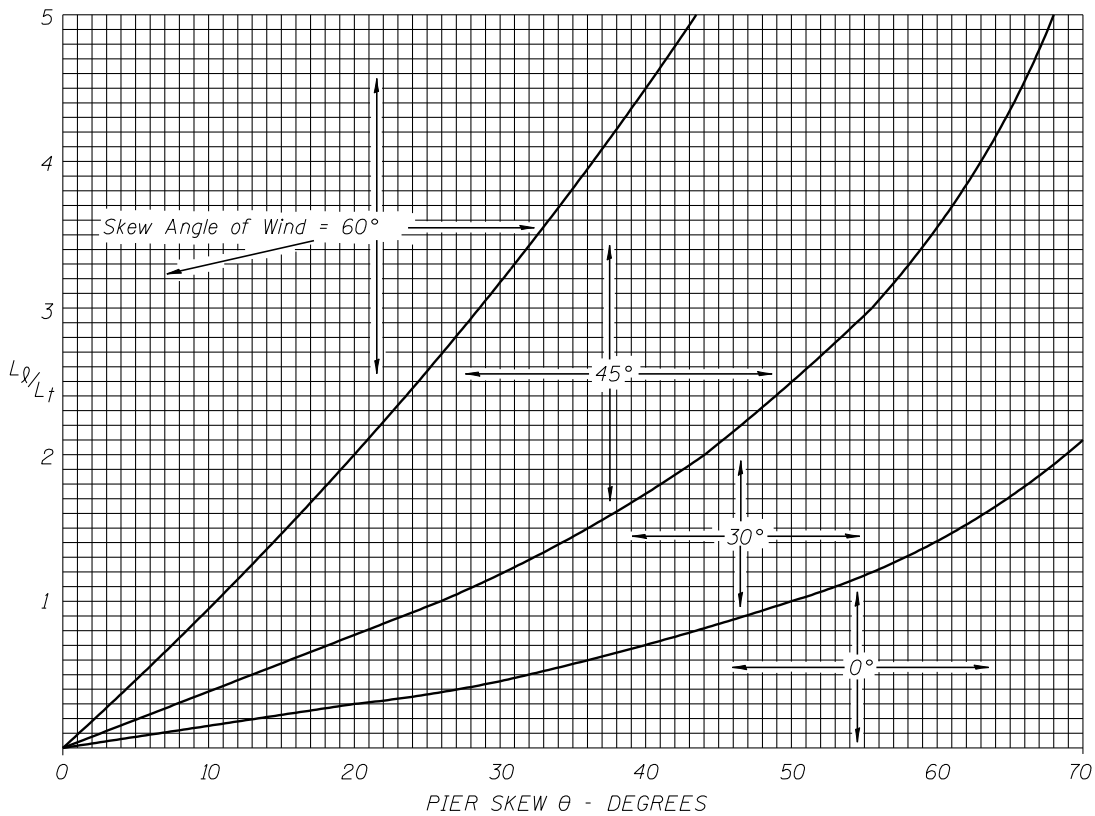

L_ℓ = Loaded length, longitudinal wind on superstructure

L_t = Loaded length, transverse wind on superstructure

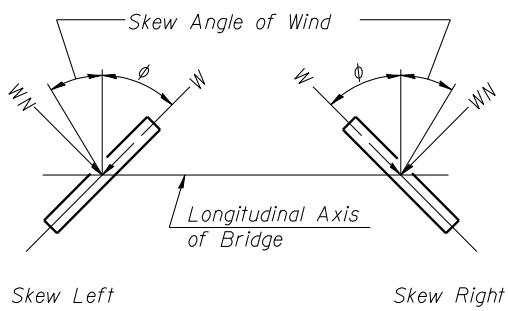

SKEW ANGLE OF WIND
GIRDER SPANS
W_N MAX.

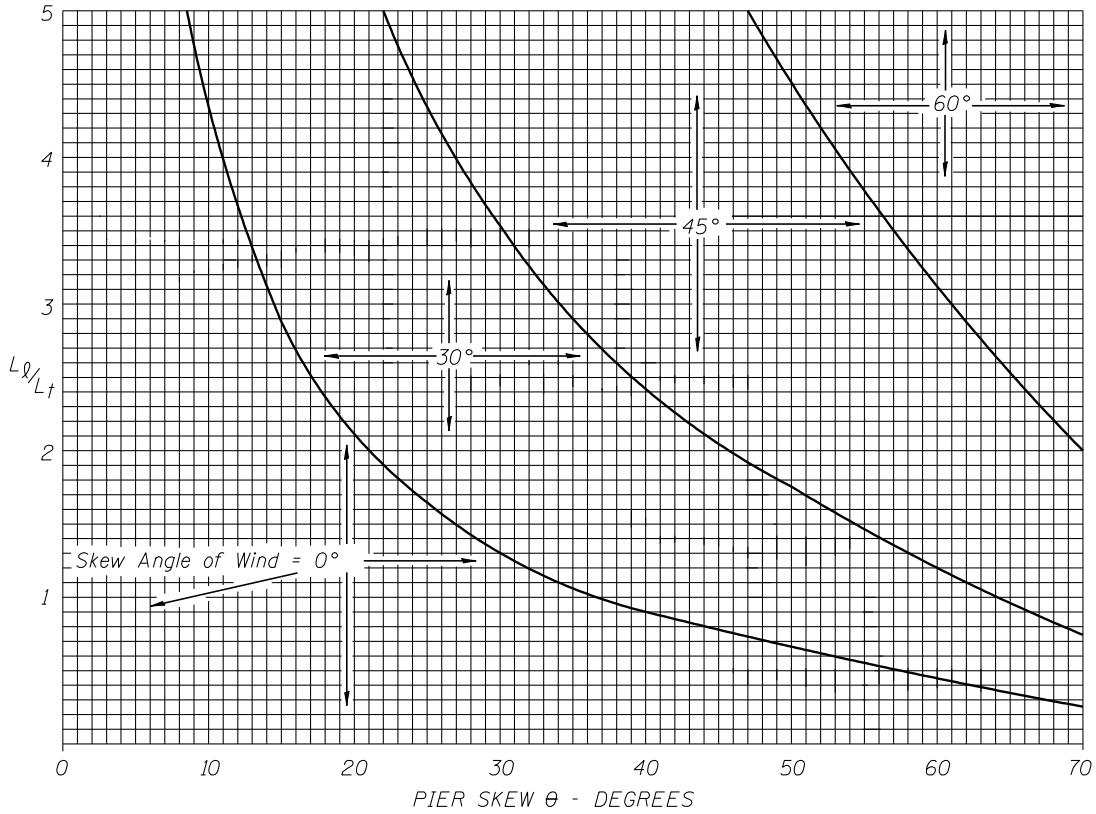

L_ℓ = Loaded length, longitudinal wind on superstructure

L_t = Loaded length, transverse wind on superstructure

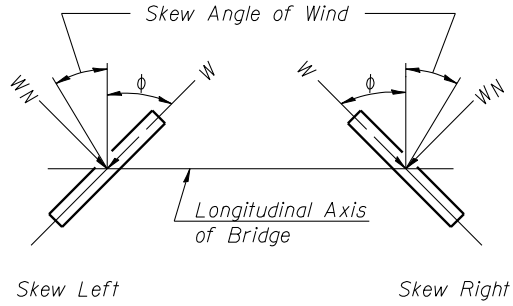

SKEW ANGLE OF WIND
GIRDER SPANS
W MAX.

TABLE OF MAXIMUM LIVE LOAD MOMENTS, SHEARS AND REACTIONS FOR SIMPLE SPANS

The values in this table were generated using the HL-93 live loading specified in AASHTO LRFD Article 3.6.1.2 for one lane. The moments provided include the dynamic load allowance (IM). The location at which the maximum moment occurs is also given. The shears/reactions provided are given with and without (IM)

	Moment		End Shear/Reaction			Moment		End Shear/Reaction	
Span (ft.)	Location	M(LL+IM) (k-ft.)	R(LL) (kips)	R(LL+IM) (kips)	Span (ft.)	Location	M(LL+IM) (k-ft.)	R(LL) (kips)	R(LL+IM) (kips)
1	0.500	10.7	32.3	42.9	36	0.472	637.2	64.9	82.5
2	0.500	21.6	32.6	43.2	37	0.473	659.6	65.7	83.4
3	0.500	32.6	33.0	43.5	38	0.474	682.2	66.5	84.4
4	0.500	43.8	33.3	43.8	39	0.474	704.9	67.2	85.3
5	0.500	55.2	33.6	44.2	40	0.475	727.8	68.0	86.2
6	0.500	66.7	35.3	46.3	41	0.443	754.6	68.7	87.1
7	0.500	78.4	38.0	49.7	42	0.444	784.9	69.4	87.9
8	0.500	90.2	40.1	52.4	43	0.446	815.3	70.1	88.7
9	0.500	102.2	41.8	54.6	44	0.447	845.9	70.8	89.5
10	0.500	114.4	43.2	56.4	45	0.448	876.7	71.5	90.3
11	0.409	131.8	44.4	57.9	46	0.449	907.7	72.1	91.1
12	0.417	149.7	45.5	59.3	47	0.450	938.9	72.7	91.8
13	0.423	167.9	46.5	60.4	48	0.451	970.2	73.4	92.5
14	0.429	186.4	47.3	61.5	49	0.452	1001.6	74.0	93.2
15	0.433	205.0	48.1	62.4	50	0.453	1033.3	74.6	93.9
16	0.438	223.8	48.9	63.3	51	0.454	1065.1	75.1	94.6
17	0.441	242.8	49.6	64.1	52	0.455	1097.1	75.7	95.2
18	0.444	262.0	50.2	64.9	53	0.456	1129.2	76.3	95.9
19	0.447	281.4	50.8	65.6	54	0.457	1161.6	76.8	96.5
20	0.450	301.0	51.4	66.3	55	0.458	1194.0	77.4	97.1
21	0.452	320.8	52.0	66.9	56	0.458	1226.7	77.9	97.7
22	0.455	340.7	52.5	67.5	57	0.459	1259.5	78.5	98.3
23	0.457	360.8	53.0	68.1	58	0.460	1292.5	79.0	98.9
24	0.458	381.0	53.5	68.6	59	0.460	1325.6	79.5	99.5
25	0.460	401.5	54.1	69.3	60	0.461	1358.9	80.0	100.1
26	0.462	422.1	55.1	70.5	61	0.462	1392.4	80.5	100.6
27	0.463	442.8	56.0	71.7	62	0.462	1426.1	81.0	101.2
28	0.464	463.8	57.0	72.8	63	0.463	1459.9	81.5	101.7
29	0.466	484.9	58.1	74.2	64	0.464	1493.8	82.0	102.3
30	0.467	506.1	59.2	75.6	65	0.464	1528.0	82.5	102.8
31	0.468	527.6	60.2	76.8	66	0.465	1562.3	82.9	103.3
32	0.469	549.2	61.2	78.1	67	0.465	1596.7	83.4	103.9
33	0.470	570.9	62.2	79.2	68	0.466	1631.4	83.9	104.4
34	0.471	592.9	63.1	80.4	69	0.466	1666.2	84.3	104.9
35	0.471	615.0	64.0	81.4	70	0.467	1701.1	84.8	105.4

Span (ft.)	Moment Location	Moment M(LL+IM) (k-ft.)	End Shear/Reaction R(LL) (kips)	End Shear/Reaction R(LL+IM) (kips)	Span (ft.)	Moment Location	Moment M(LL+IM) (k-ft.)	End Shear/Reaction R(LL) (kips)	End Shear/Reaction R(LL+IM) (kips)
71	0.467	1736.2	85.3	105.9	111	0.479	3273.6	101.5	123.2
72	0.468	1771.5	85.7	106.4	112	0.479	3315.3	101.8	123.6
73	0.468	1806.9	86.2	106.9	113	0.479	3357.2	102.2	124.0
74	0.468	1842.5	86.6	107.4	114	0.480	3399.3	102.6	124.4
75	0.469	1878.3	87.0	107.8	115	0.480	3441.5	103.0	124.8
76	0.469	1914.2	87.5	108.3	116	0.480	3483.9	103.3	125.2
77	0.470	1950.3	87.9	108.8	117	0.480	3526.4	103.7	125.6
78	0.470	1986.6	88.3	109.3	118	0.480	3569.1	104.1	125.9
79	0.470	2023.0	88.8	109.7	119	0.480	3612.0	104.4	126.3
80	0.471	2059.6	89.2	110.2	120	0.481	3655.0	104.8	126.7
81	0.471	2096.3	89.6	110.6	121	0.481	3698.2	105.2	127.1
82	0.472	2133.2	90.0	111.1	122	0.481	3741.5	105.5	127.5
83	0.472	2170.3	90.5	111.6	123	0.481	3785.0	105.9	127.9
84	0.472	2207.5	90.9	112.0	124	0.481	3828.7	106.3	128.2
85	0.473	2244.9	91.3	112.4	125	0.481	3872.5	106.6	128.6
86	0.473	2282.4	91.7	112.9	126	0.481	3916.5	107.0	129.0
87	0.473	2320.2	92.1	113.3	127	0.482	3960.7	107.3	129.4
88	0.473	2358.0	92.5	113.8	128	0.482	4005.0	107.7	129.7
89	0.474	2396.1	92.9	114.2	129	0.482	4049.4	108.1	130.1
90	0.474	2434.3	93.3	114.6	130	0.482	4094.1	108.4	130.5
91	0.474	2472.6	93.7	115.1	131	0.482	4138.9	108.8	130.9
92	0.475	2511.1	94.1	115.5	132	0.482	4183.8	109.1	131.2
93	0.475	2549.8	94.5	115.9	133	0.482	4228.9	109.5	131.6
94	0.475	2588.6	94.9	116.3	134	0.483	4274.2	109.9	132.0
95	0.475	2627.6	95.3	116.8	135	0.483	4319.6	110.2	132.3
96	0.476	2666.8	95.7	117.2	136	0.483	4365.2	110.6	132.7
97	0.476	2706.1	96.1	117.6	137	0.483	4411.0	110.9	133.1
98	0.476	2745.6	96.5	118.0	138	0.483	4456.9	111.3	133.4
99	0.476	2785.3	96.9	118.4	139	0.483	4502.9	111.6	133.8
100	0.477	2825.1	97.3	118.8	140	0.483	4549.2	112.0	134.2
101	0.477	2865.0	97.7	119.2	141	0.483	4595.6	112.4	134.5
102	0.477	2905.2	98.1	119.6	142	0.484	4642.1	112.7	134.9
103	0.477	2945.5	98.4	120.0	143	0.484	4688.8	113.1	135.3
104	0.478	2985.9	98.8	120.4	144	0.484	4735.7	113.4	135.6
105	0.478	3026.5	99.2	120.8	145	0.484	4782.8	113.8	136.0
106	0.478	3067.3	99.6	121.2	146	0.484	4829.9	114.1	136.4
107	0.478	3108.2	100.0	121.6	147	0.484	4877.3	114.5	136.7
108	0.478	3149.3	100.3	122.0	148	0.484	4924.8	114.8	137.1
109	0.479	3190.6	100.7	122.4	149	0.484	4972.5	115.2	137.4
110	0.479	3232.0	101.1	122.8	150	0.484	5020.3	115.5	137.8

4.2 Base Sheets

This section provides an index of Departmental Base Sheet and Cell Detail Libraries which are available online. Electronic links are also provided. BBS manual users will be informed of Base Sheet and/or Cell Detail updates via the IDOT BBS Subscription Service. See Section 1.1.3 for more information.

Base Sheets are intended to be used without revision except for the addition of some items which have intentionally been left blank. Some Base Sheets specify alternate details. Typically, not all of the alternates will pertain to the specific job to which the Base Sheet was attached. However, in most cases, details and notes located elsewhere in the plans should clarify which alternate is applicable. In most cases it is not necessary to cross out details which do not pertain.

In some cases it may be necessary to modify details or add details to the Base Sheets. When this is done, the name and date of the Base Sheet in the lower left corner should be removed. This alerts the person reviewing the plans that the Base Sheet has been revised and that it will need to be reviewed. This also maintains the integrity of the Base Sheets by preventing the revised Base Sheet from being used on future jobs as if it was the original.

IDOT CADD support may be found at the following address. At this address, all IDOT bridge Base Sheets, Cell Libraries, and Example Plans may be found here : http://www.idot.illinois.gov/doing-business/procurements/engineering-architectural-professional-services/Consultants-Resources/index.