CELL / MODEL NAME	DESCRIPTION	DATE
R-20	Aluminum Railing, Type L	11/22/2016
R-23A	Steel Railing, Type S-1	11/22/2016
R-24A	Steel Railing, Type T-1	11/22/2016
R-25	Steel Railing (Temporary)	11/22/2016
R-26	Steel Railing, Type TP-1	11/22/2016
R-27	Temporary concrete barrier for stage construction	11/22/2016
R-28	Bridge Fence Railing(Parapet Mounted)	11/22/2016
R-29	Bicycle Railing	11/22/2016
R-30	Steel Railing, Type WT	11/22/2016
R-31	Steel Railing, Type 2399	11/22/2016
R-32	Bridge Fence Railing (Parapet Mounted)	11/22/2016
R-33	Bridge Fence Railing (Sidewalk Mounted)	11/22/2016
R-34CWS	Steel Railing, Type SM with concrete wearing surface	11/22/2016
R-34CWSC	Steel Railing, Type SM with concrete wearing surface and curb	11/22/2016
R-34HMAWS	Steel Railing, Type SM with hot-mix asphalt wearing surface	11/22/2016
R-35 (1 of 2)	Concrete Bridge Railing for bridges with steel beams or girders	11/22/2016

CELL / MODEL NAME	DESCRIPTION	DATE
R-35 (2 of 2)	Concrete Bridge Railing for bridges with steel beams or girders	11/22/2016
R-36 (1 of 2)	Concrete Bridge Railing for slab bridges	11/22/2016
R-36 (2 of 2)	Concrete Bridge Railing for slab bridges	11/22/2016
R-37 (1 of 2)	Concrete Bridge Railing for bridges with sidewalks	11/22/2016
R-37 (2 of 2)	Concrete Bridge Railing for bridges with sidewalks	11/22/2016
R-38 (1 of 2)	Concrete Bridge Railing, TL-4	11/22/2016
R-38 (2 of 2)	Concrete Bridge Railing, TL-4	11/22/2016
R-39 (1 of 2)	Bicycle Railing (Parapet Mounted)	11/22/2016
R-39 (2 of 2)	Bicycle Railing (Parapet Mounted)	11/22/2016

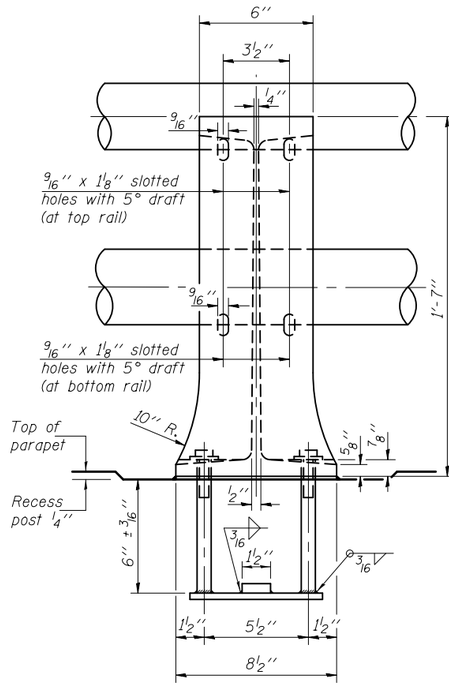

VIEW B-B

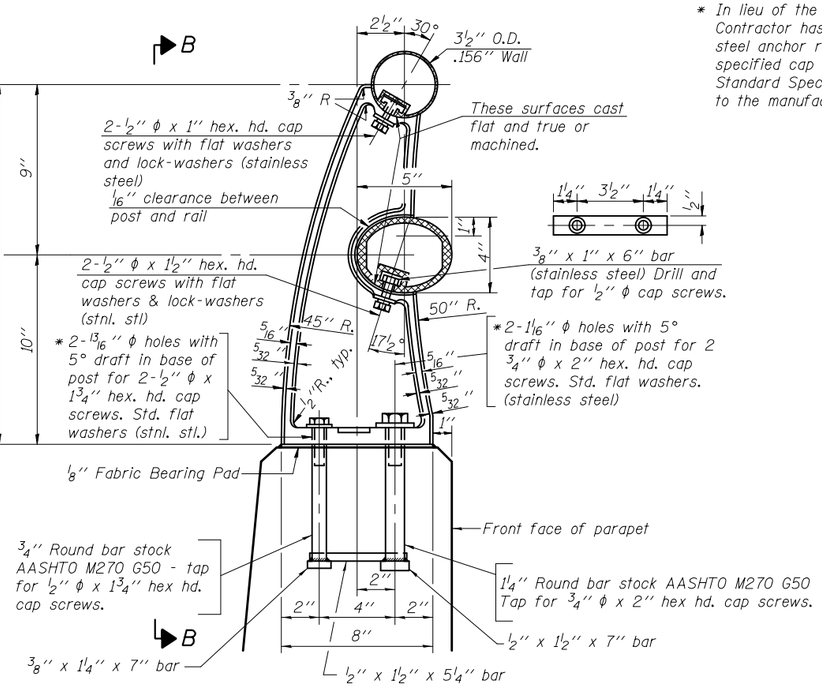

SECTION A-A

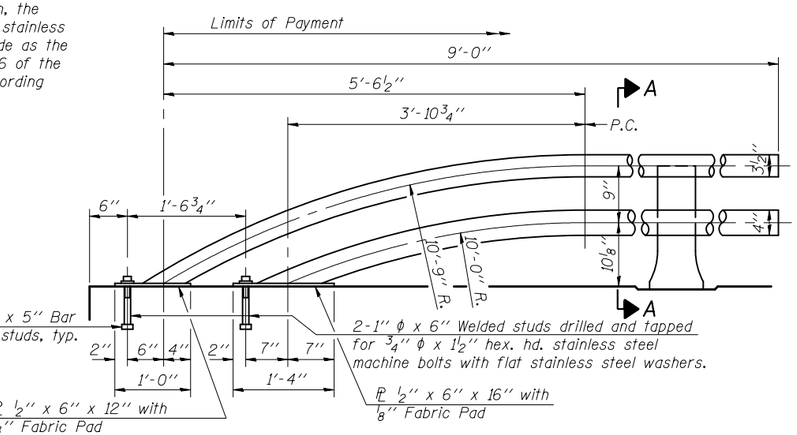

* In lieu of the cast-in-place anchor device shown, the Contractor has the option of drilling and setting stainless steel anchor rods of the same diameter and grade as the specified cap screws according to Article 509.06 of the Standard Specifications. Embedment shall be according to the manufacturer's specifications.

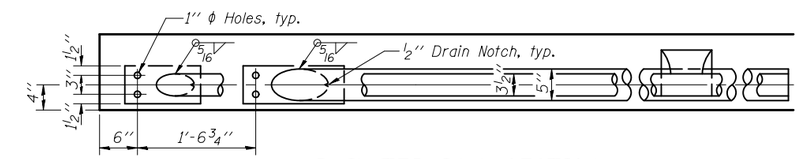

RAIL TERMINAL SECTION

Note: The end rail post shall be set back as required for the terminal rail section.

RAIL POST DETAILS

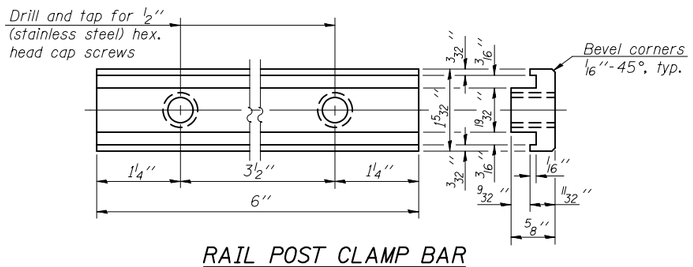

RAIL POST CLAMP BAR

For Top Rail

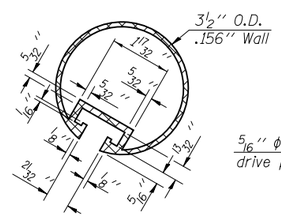

SECTION THRU TOP RAIL

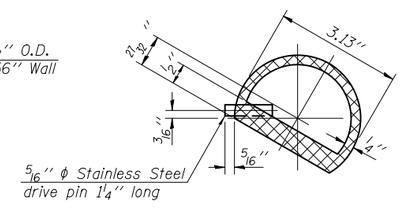

SECTION THRU SPLICE

For Top Rail

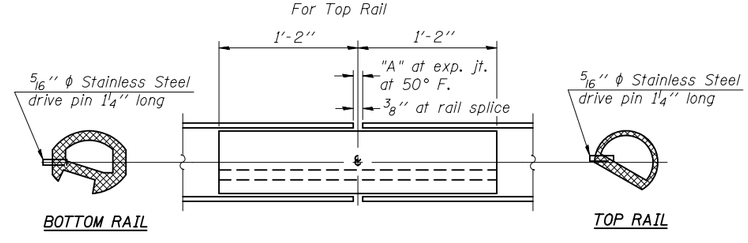

RAIL SPLICE

T	"A"
≤ 4''	2½''
> 4'' ≤ 6½''	3¾''
> 6½'' ≤ 9''	5''
> 9'' ≤ 13''	7''

T = Total movement at expansion joint as shown on the design plans.

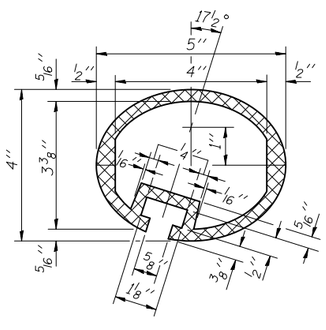

SEC. THRU ELLIPTICAL RAIL SECTION

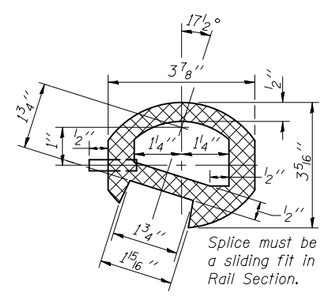

SEC. THRU SPLICE

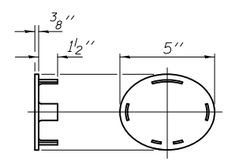

CAST END CAP

For bottom rail
DRIVE FIT TYPE

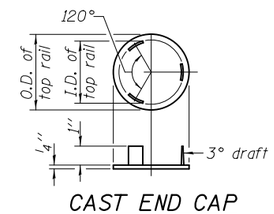

CAST END CAP

For top rail

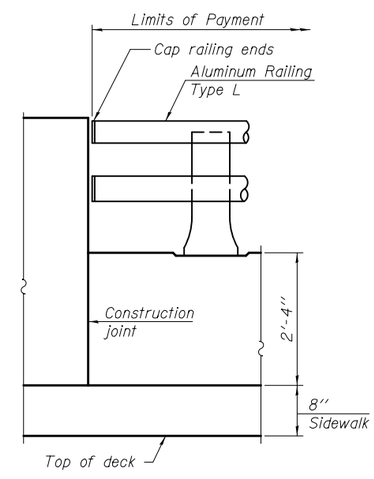

RAIL END TREATMENT FOR TYPE 5 AND 6 TERMINAL

Notes:
All Posts shall be normal to parapet.
All joints in rail shall be spliced per detail.
All exposed rail ends shall be capped per detail.
Provide 1-⅛'' and 2-1/16'' Aluminum Shims for 25% of the Posts. Rail elements shall be parallel to Grade-high spots will be ground and low spots shimmed.
See sheet of for rail post spacing.

BILL OF MATERIAL

Item	Unit	Quantity
Aluminum Railing, Type L	Foot	

R-20 11-22-2016 (7'-0'' to 10'-0'' Post spacing)

FILE NAME =	USER NAME =	DESIGNED -	REVISED -
		CHECKED -	REVISED -
	PLOT SCALE =	DRAWN -	REVISED -
	PLOT DATE =	CHECKED -	REVISED -

STATE OF ILLINOIS
DEPARTMENT OF TRANSPORTATION

ALUMINUM RAILING, TYPE L
STRUCTURE NO.

F.A. RTE.	SECTION	COUNTY	TOTAL SHEETS	SHEET NO.

CONTRACT NO.

ILLINOIS FED. AID PROJECT

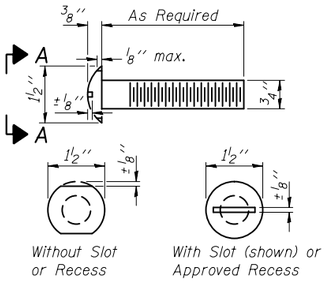

VIEW A-A
ROUND HEAD BOLT

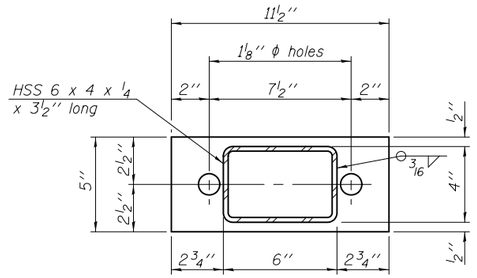

PL 1/2" x 11 1/2" x 5"

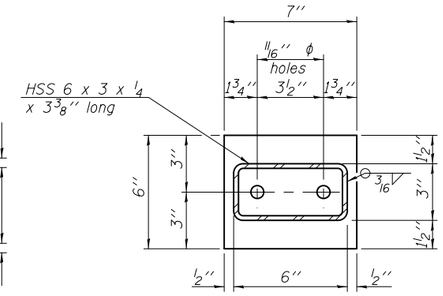

PL 1/2" x 7" x 6"

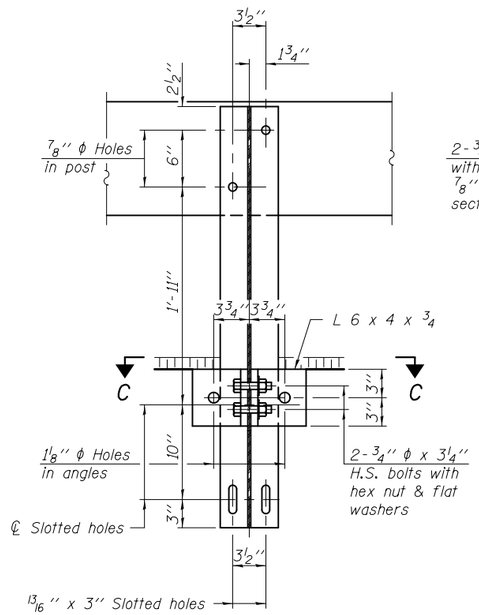

SECTION B-B

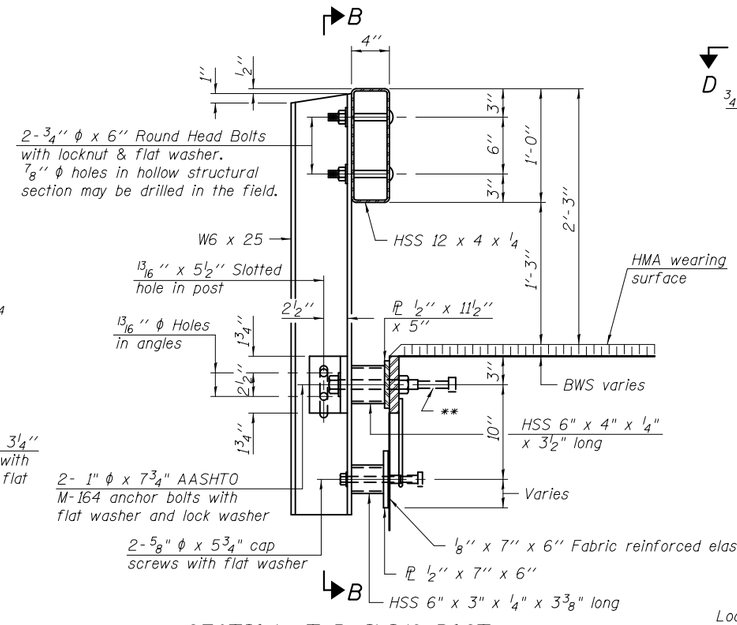

SECTION AT RAILING POST

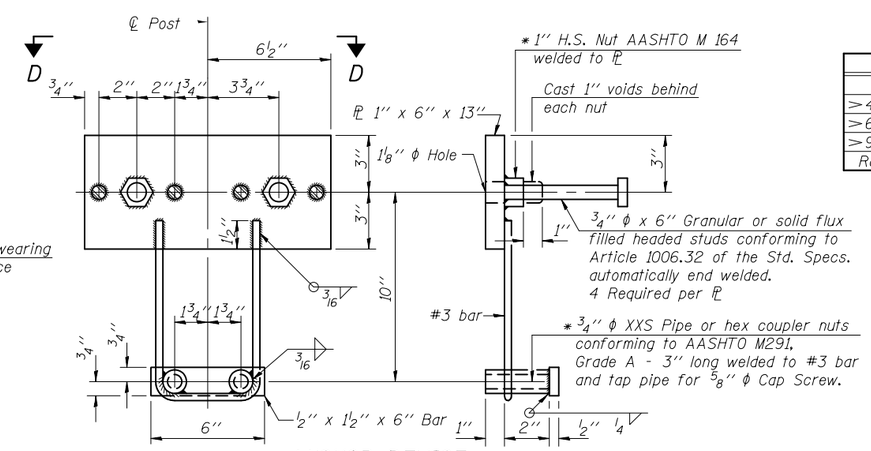

ANCHOR DEVICE

* Threaded areas shall be plugged or blocked off during casting of beam.

SPLICE DIMENSIONS

T	D	A	B	C	E
≤ 4"	2 1/2"	1'-8"	2"	4"	2 1/2"
> 4" ≤ 6 1/2"	3 3/4"	2'-0"	2 1/2"	5 1/2"	3 1/2"
> 6 1/2" ≤ 9"	5"	2'-4"	3 1/2"	6 1/2"	9"
> 9" ≤ 13"	7"	2'-10"	4 1/2"	8 1/2"	11"
Rail Splice	1/4"	1'-8"	2"	4"	——

T = Total movement at expansion joint as shown on the design plans.

Notes:

For multi-span bridges, sufficient 1/4" x 6" x 1'-2" galvanized steel shims shall be provided to align rail between adjacent spans. Cost included with Steel Railing, Type S-1.

All steel rail elements shall be galvanized according to Article 509.05 of the Standard Specifications.

** The studs of the anchor devices shall be placed below the top reinforcement bars and the outermost longitudinal reinforcement bar shall be placed directly above the studs of the rail post anchor device. The anchorage studs may be bent down 1/2" to accommodate the top reinforcement bar placement.

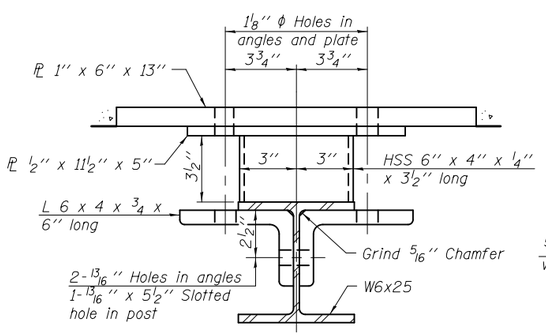

SECTION C-C

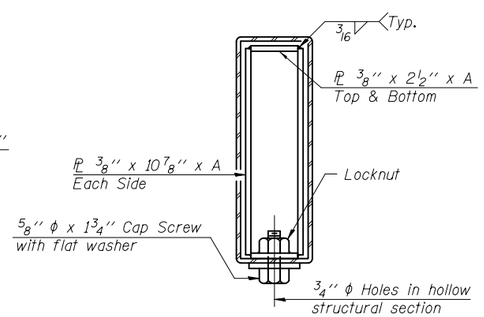

SECTIONS AT RAIL SPLICE

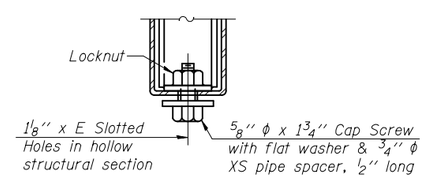

RAIL SPLICE CONNECTION
AT EXPANSION JT.

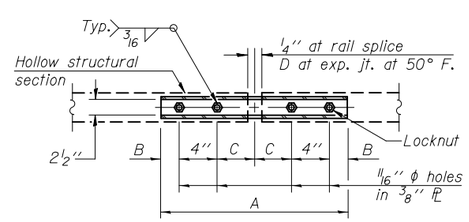

PLAN-BOTT. SPLICE PL
TYPICAL

1 1/8" ϕ Holes for 1" ϕ x 4" Round head bolts. Provide 2 flat washers & locknuts for guard rail connection shown on Hwy Std. 631026 or BLR 27-1.

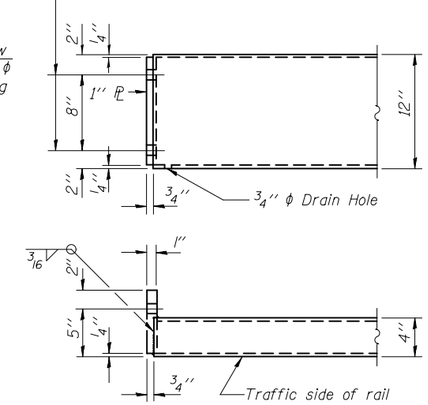

END OF RAIL DETAILS

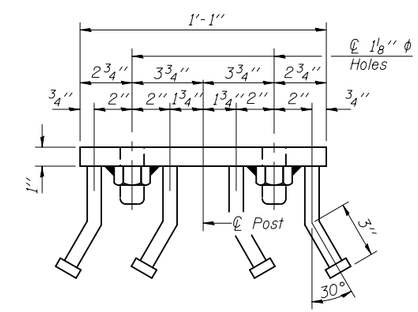

VIEW D-D

BILL OF MATERIAL

Item	Unit	Quantity
Steel Railing, Type S-1	Foot	

R-23A

11-22-2016 (10'-9" Maximum Post Spacing)

FILE NAME =	USER NAME =	DESIGNED -	REVISED -	STATE OF ILLINOIS DEPARTMENT OF TRANSPORTATION	STEEL RAILING, TYPE S-1 STRUCTURE NO.	F.A. RTE.	SECTION	COUNTY	TOTAL SHEETS	SHEET NO.
		CHECKED -	REVISED -							
	PLOT SCALE =	DRAWN -	REVISED -					CONTRACT NO.		
	PLOT DATE =	CHECKED -	REVISED -				ILLINOIS	FED. AID PROJECT		

Notes:

For multi-span bridges, sufficient 1/4" x 6" x 1'-5" galvanized steel shims shall be provided to align rail between adjacent spans. Cost included with Steel Railing, Type T-1.

All steel rail elements shall be galvanized according to Article 509.05 of the Standard Specifications.

** The studs of the anchor devices shall be placed below the top reinforcement bars and the outermost longitudinal reinforcement bar shall be placed directly above the studs of the rail post anchor device.

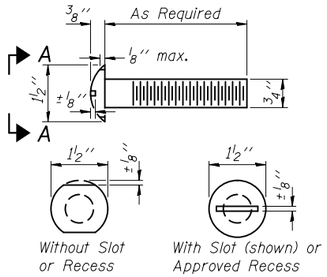

VIEW A-A
ROUND HEAD BOLT

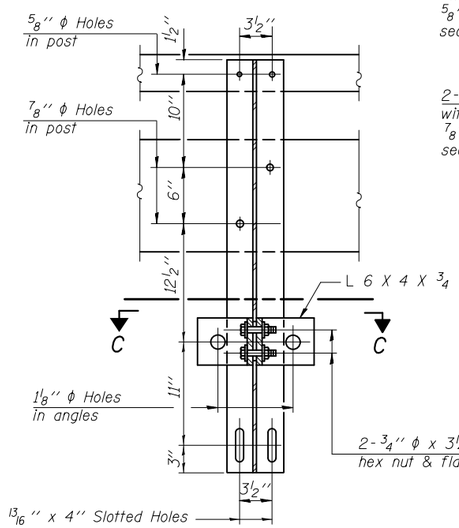

SECTION B-B

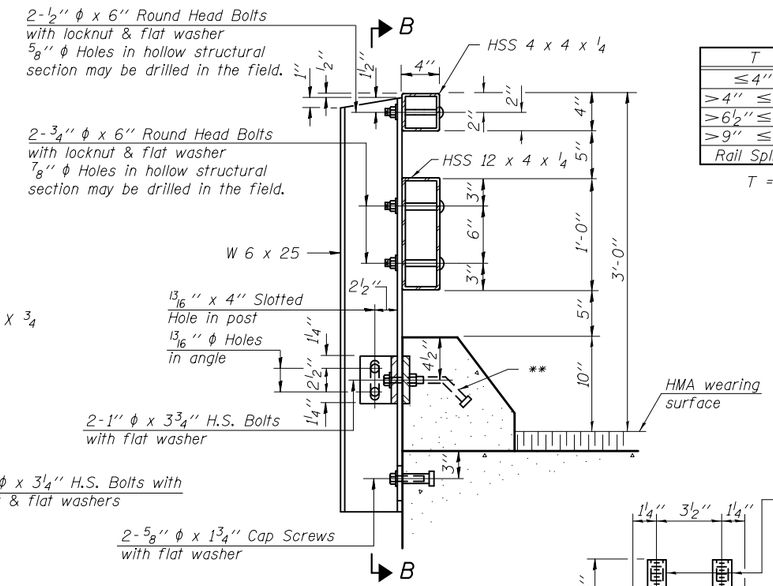

SECTION AT RAIL POST

SPLICE DIMENSIONS

T	D	A	B	C	E
≤ 4"	2 1/2"	1'-8"	2"	4"	2 1/2"
> 4" ≤ 6 1/2"	3 3/4"	2'-0"	2 1/2"	5 1/2"	3 1/2"
> 6 1/2" ≤ 9"	5"	2'-4"	3 1/2"	6 1/2"	9"
> 9" ≤ 13"	7"	2'-10"	4 1/2"	8 1/2"	11"
Rail Splice	1/4"	1'-8"	2"	4"	——

T = Total movement at expansion joint as shown on the design plans.

* Threaded areas shall be plugged or blocked off during casting of beam.

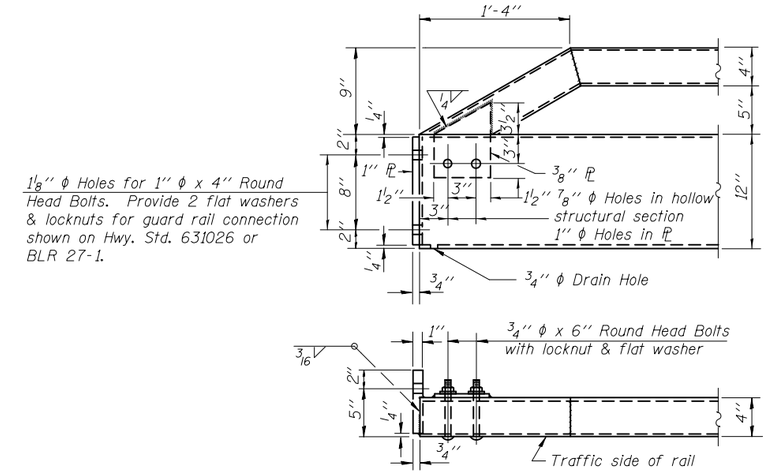

END OF RAIL DETAILS

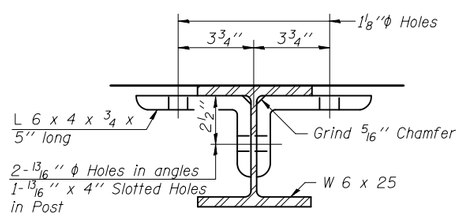

SECTION C-C

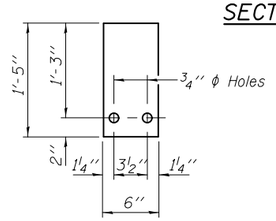

1/4" SHIM PLATE

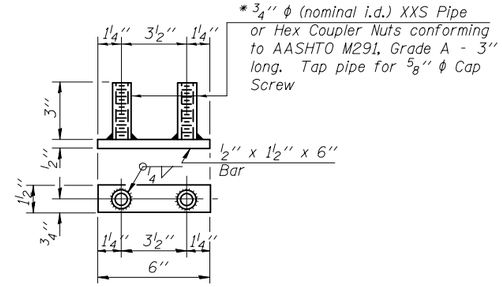

BOTTOM ANCHOR DEVICE

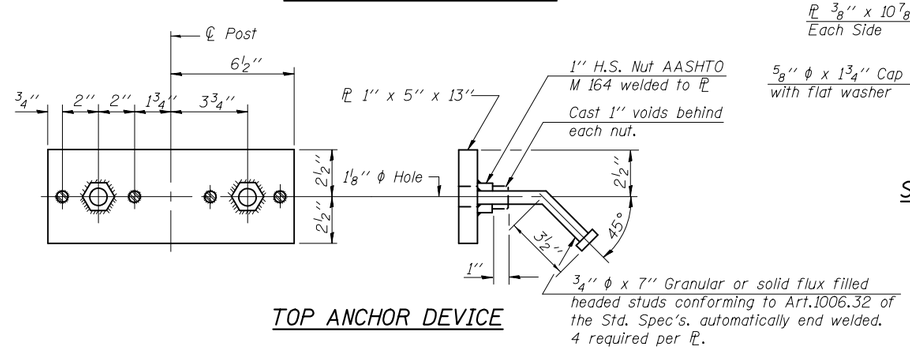

TOP ANCHOR DEVICE

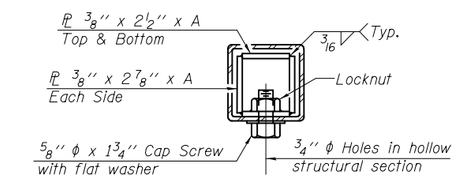

TOP RAIL

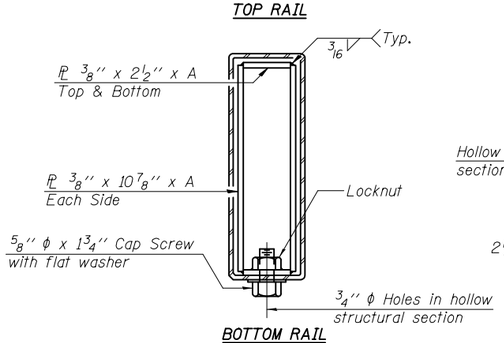

BOTTOM RAIL

SECTIONS AT RAIL SPLICE

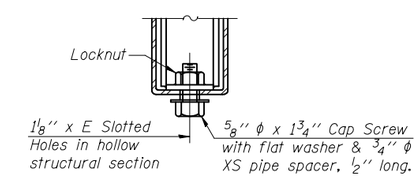

RAIL SPLICE CONNECTION AT EXPANSION JT.

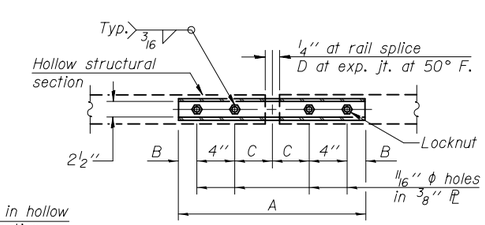

PLAN-BOTT. SPLICE PL TYPICAL

BILL OF MATERIAL

Item	Unit	Quantity
Steel Railing, Type T-1	Foot	

R-24A

11-22-2016 (9'-6" Maximum Post Spacing)

FILE NAME =	USER NAME =	DESIGNED -	REVISED -	STATE OF ILLINOIS DEPARTMENT OF TRANSPORTATION	STEEL RAILING, TYPE T-1 STRUCTURE NO.	F.A. RTE.	SECTION	COUNTY	TOTAL SHEETS	SHEET NO.
		CHECKED -	REVISED -							
	PLOT SCALE =	DRAWN -	REVISED -			CONTRACT NO.				
	PLOT DATE =	CHECKED -	REVISED -			ILLINOIS	FED. AID PROJECT			

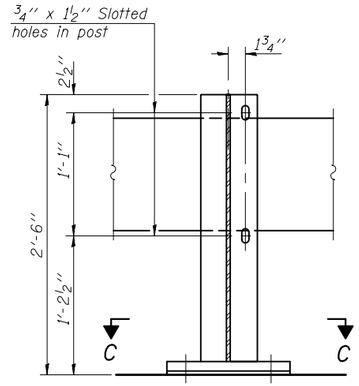

SECTION A-A

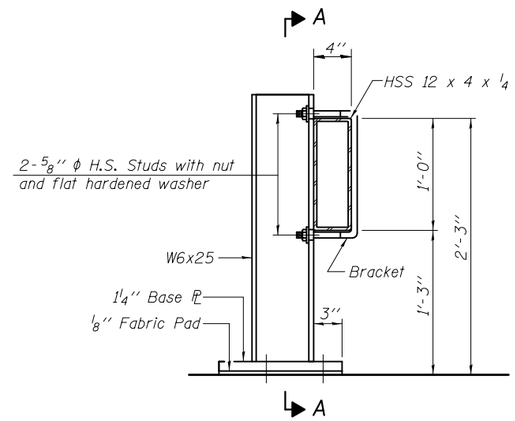

SECTION AT RAIL POST

ALTERNATE I

(To be used only for Roadway width ≥12')

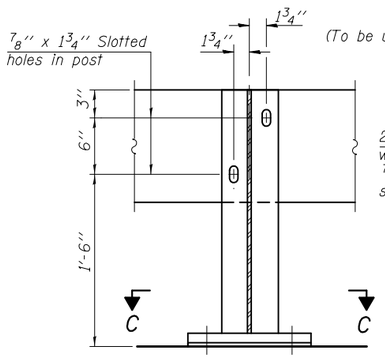

SECTION A-A

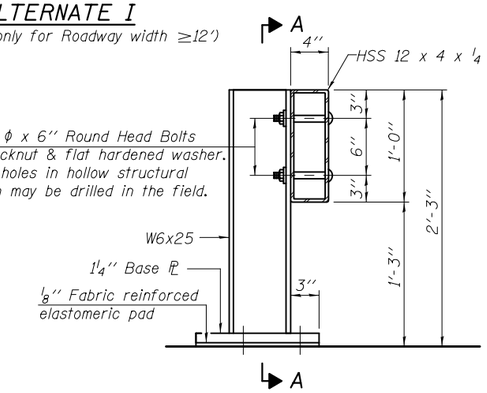

SECTION AT RAIL POST

ALTERNATE II

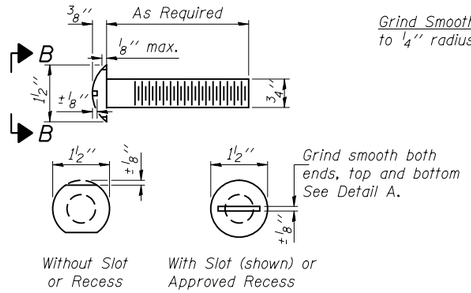

VIEW B-B
ROUND HEAD BOLT

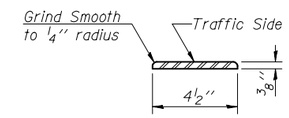

DETAIL A

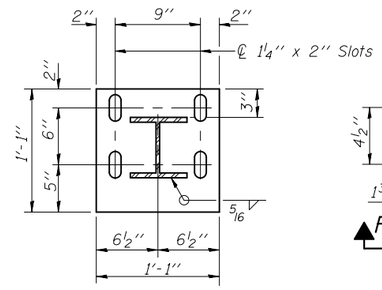

SECTION C-C

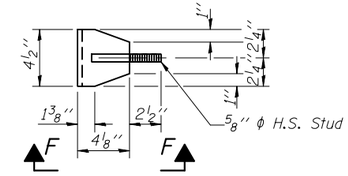

VIEW D-D

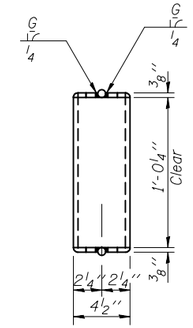

VIEW E-E

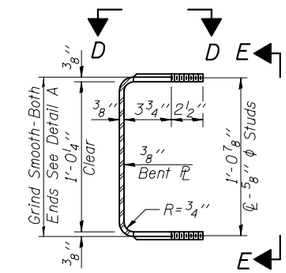

SECTION THRU BRACKET

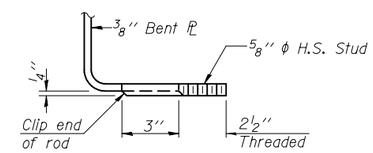

VIEW F-F

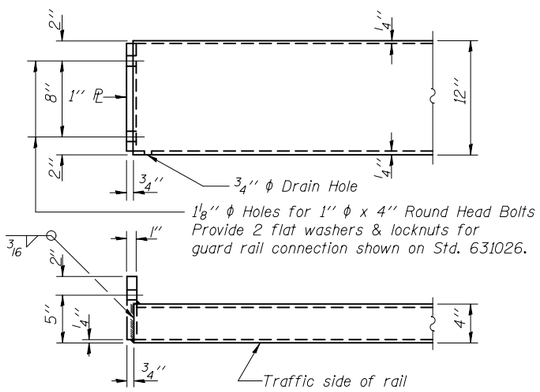

END OF RAIL DETAILS

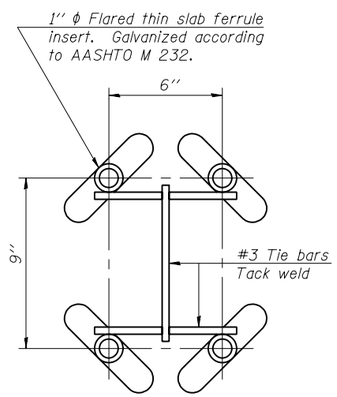

INSERT DETAIL

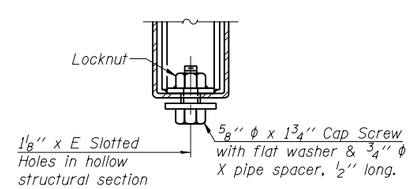

RAIL SPLICE CONNECTION
AT EXPANSION JT.

SPLICE DIMENSIONS

T	D	A	B	C	E
≤4''	2 1/2''	1'-8''	2''	4''	2 1/2''
>4'' ≤6 1/2''	3 3/4''	2'-0''	2 1/2''	5 1/2''	3 1/2''
>6 1/2'' ≤9''	5''	2'-4''	3 1/2''	6 1/2''	9''
>9'' ≤13''	7''	2'-10''	4 1/2''	8 1/2''	11''
Rail Splice	1/4''	1'-8''	2''	4''	——

T = Total movement at expansion joint as shown on the design plans.

Notes:
The contact surfaces between post flange, rail and inside face of bracket for Alternate I shall be free of all lubricants.
The nut for 5/8'' ϕ high strength studs used in Alternate I to connect bracket to post shall be tightened to a snug fit and given an additional one half turn.

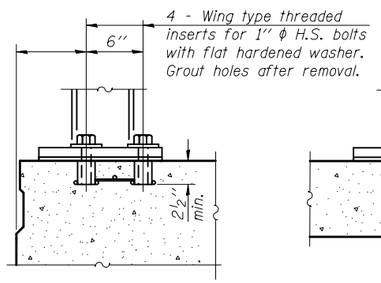

P.P.C. DECK BEAMS

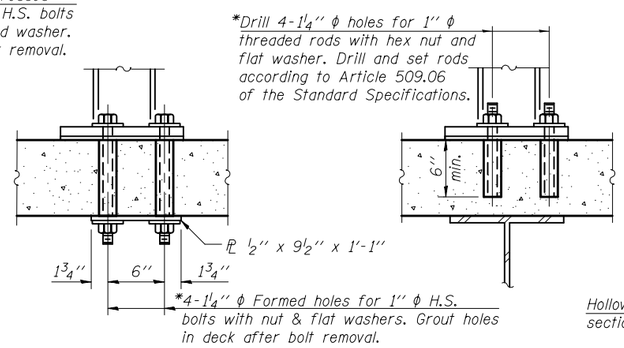

NEW & EXISTING DECKS

ANCHORAGE DETAILS

*Drilled holes for existing deck.

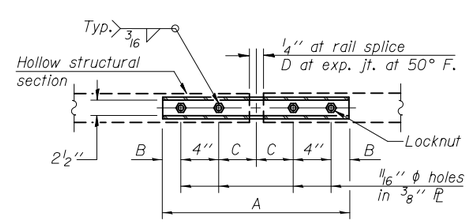

PLAN-BOTT. SPLICE PL
TYPICAL

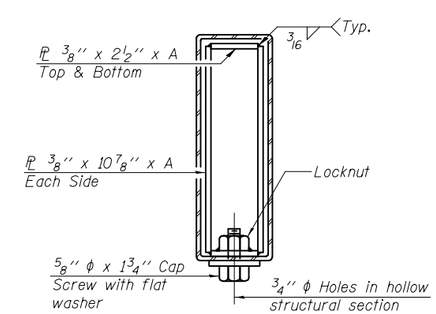

SECTION AT RAIL SPLICE

TEMPORARY BRIDGE RAIL POST SPACING

BILL OF MATERIAL

Item	Unit	Quantity
Steel Railing (Temporary)	Foot	

R-25 11-22-2016 (10'-9'' Maximum Post Spacing)

FILE NAME =	USER NAME =	DESIGNED -	REVISED -
		CHECKED -	REVISED -
	PLOT SCALE =	DRAWN -	REVISED -
	PLOT DATE =	CHECKED -	REVISED -

STATE OF ILLINOIS
DEPARTMENT OF TRANSPORTATION

STEEL RAILING (TEMPORARY)
STRUCTURE NO.

F.A. RTE.	SECTION	COUNTY	TOTAL SHEETS	SHEET NO.

CONTRACT NO.
ILLINOIS FED. AID PROJECT

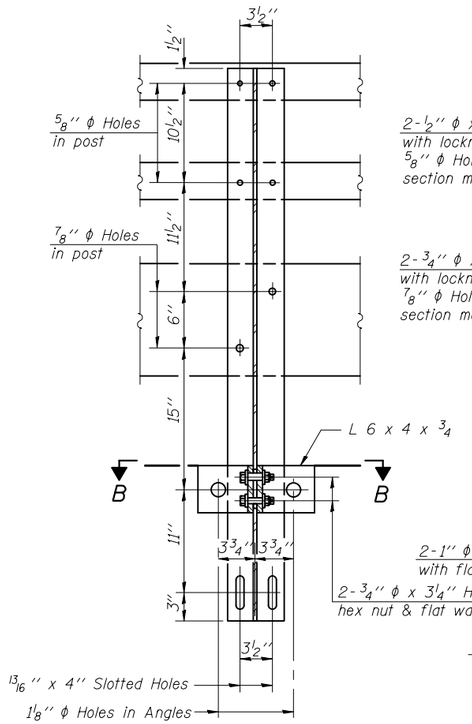

SECTION A-A

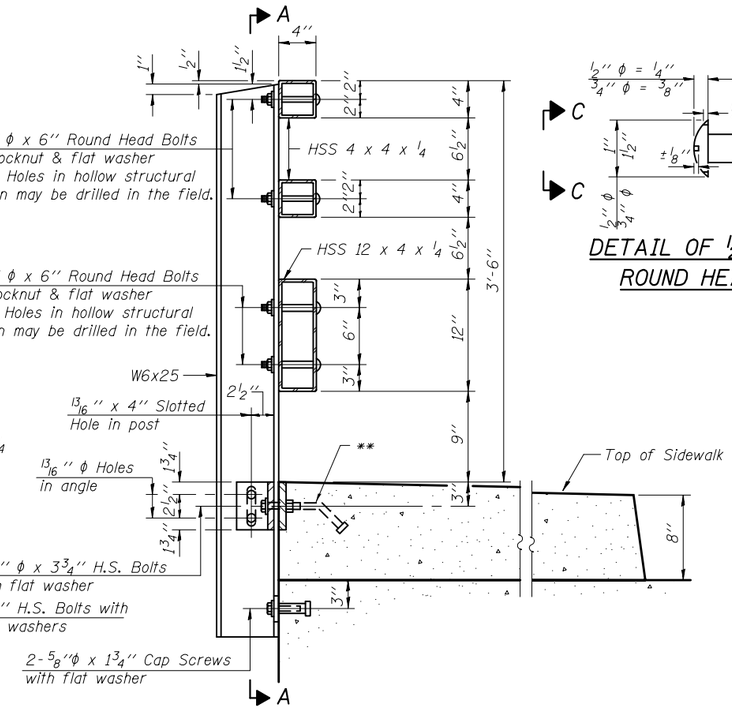

SECTION AT RAIL POST

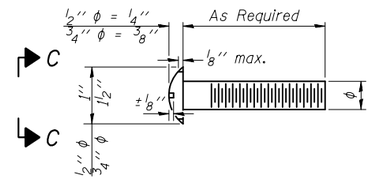

DETAIL OF ½'' φ & ¾'' φ ROUND HEAD BOLTS

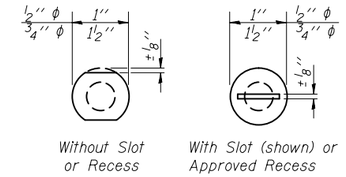

VIEW C-C

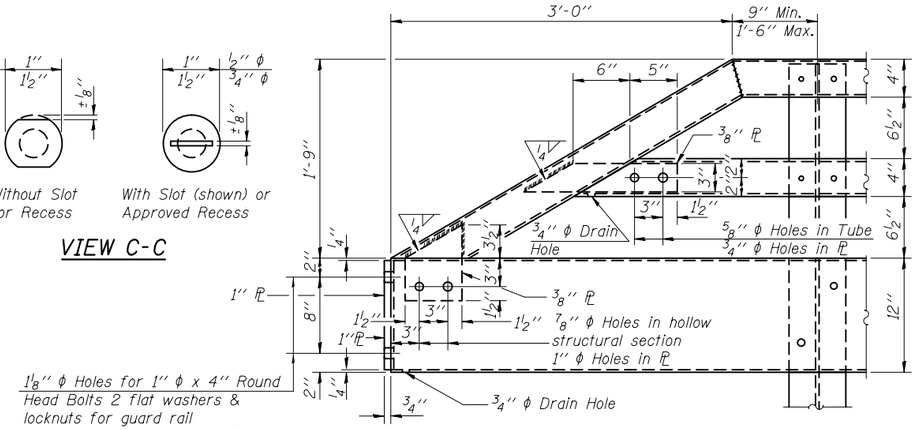

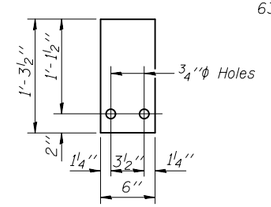

¼'' SHIM PLATE

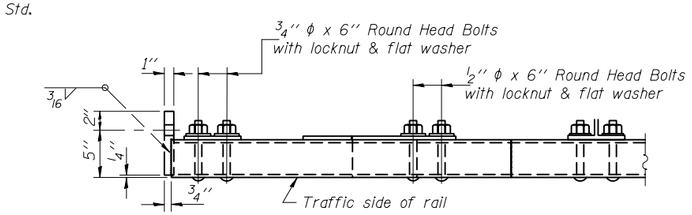

END OF RAIL DETAILS

SPLICE DIMENSIONS

T	D	A	B	C	E
≤4''	2½''	1'-8''	2''	4''	2½''
>4'' ≤6½''	3¾''	2'-0''	2½''	5½''	3½''
>6½'' ≤9''	5''	2'-4''	3½''	6½''	9''
>9'' ≤13''	7''	2'-10''	4½''	8½''	11''
Rail Splice	¼''	1'-8''	2''	4''	——

T = Total movement at expansion joint as shown on the design plans.

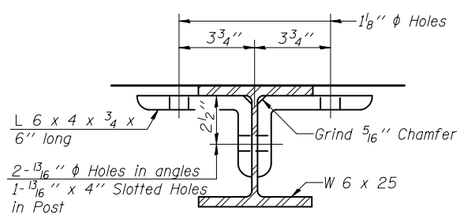

SECTION B-B

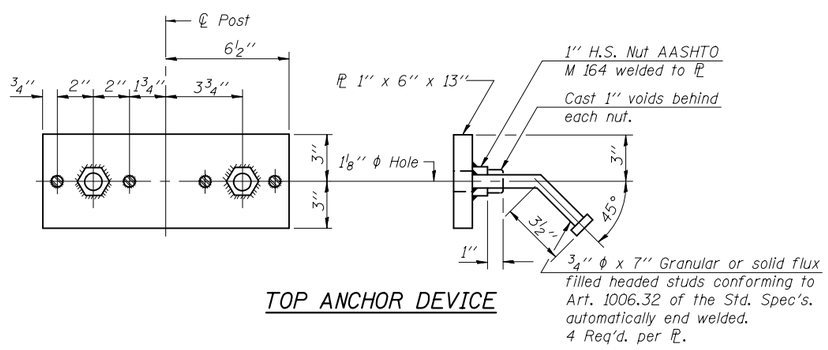

TOP ANCHOR DEVICE

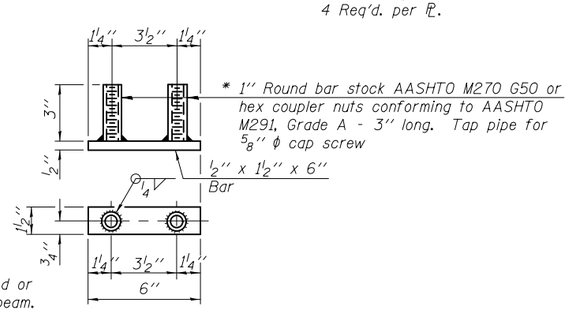

* Threaded areas shall be plugged or blocked off during casting of beam.

BOTTOM ANCHOR DEVICE

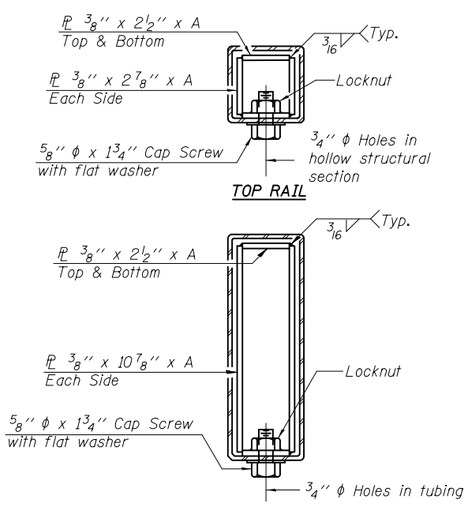

SECTIONS AT RAIL SPLICE

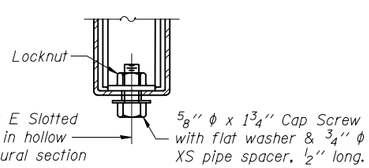

RAIL SPLICE CONNECTION AT EXPANSION JT.

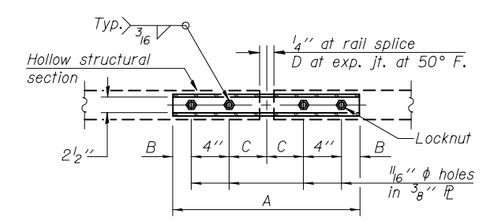

PLAN-BOTT. SPLICE PL TYPICAL

Notes:

For multi-span bridges, sufficient ¼'' x 6'' x 1'-3½'' galvanized steel shims shall be provided to align rail between adjacent spans. Cost included with Steel Railing, Type TP-1.

All steel rail elements shall be galvanized according to Article 509.05 of the Standard Specifications.

** The studs of the anchor devices shall be placed below the top reinforcement bars and the outermost longitudinal reinforcement bar shall be placed directly above the studs of the rail post anchor device.

BILL OF MATERIAL

Item	Unit	Quantity
Steel Railing, Type TP-1	Foot	

R-26 11-22-2016 (10'-6'' Maximum Post Spacing)

FILE NAME =	USER NAME =	DESIGNED -	REVISED -
		CHECKED -	REVISED -
	PLOT SCALE =	DRAWN -	REVISED -
	PLOT DATE =	CHECKED -	REVISED -

STATE OF ILLINOIS
DEPARTMENT OF TRANSPORTATION

STEEL RAILING, TYPE TP-1
STRUCTURE NO.

F.A. RTE.	SECTION	COUNTY	TOTAL SHEETS	SHEET NO.
		CONTRACT NO.		
	ILLINOIS FED. AID PROJECT			

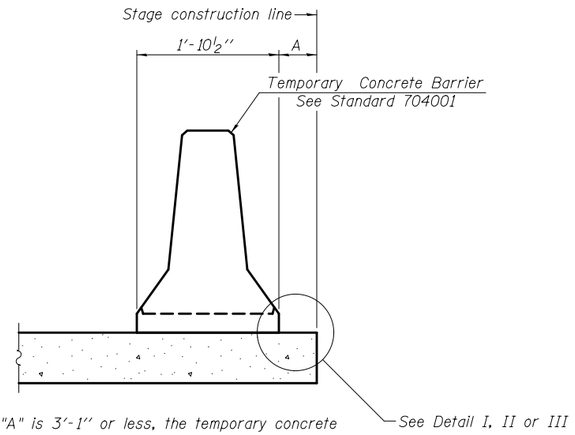

When "A" is 3'-1'' or less, the temporary concrete barrier shall be restrained to the new slab according to Detail I, II or III. No restraint is required when "A" is greater than 3'-1''.

NEW SLAB OR NEW DECK BEAM

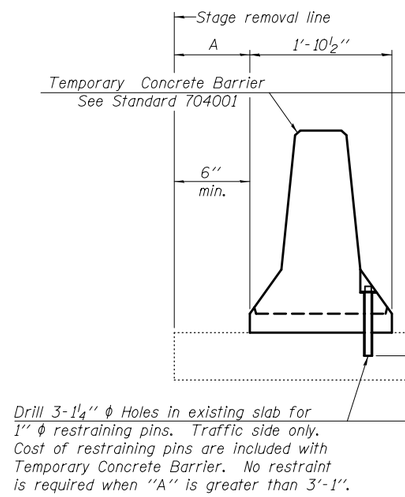

EXISTING SLAB

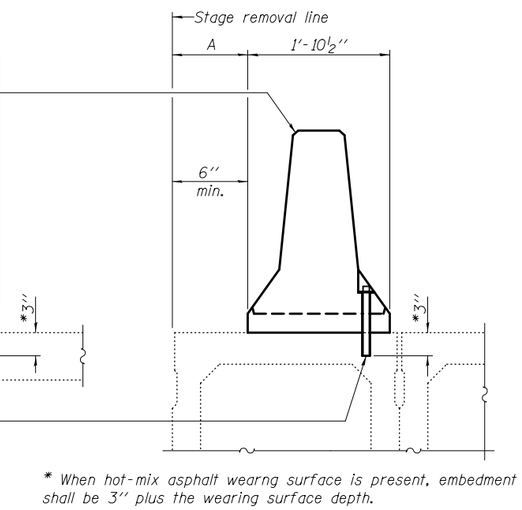

EXISTING DECK BEAM

SECTIONS THRU SLAB OR DECK BEAM

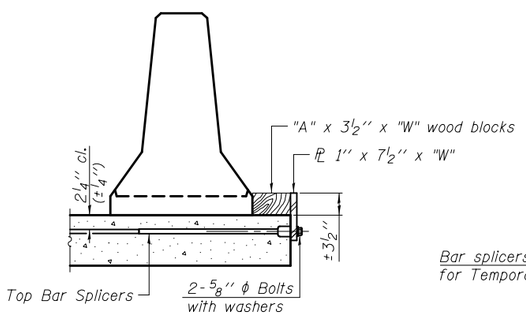

DETAIL I

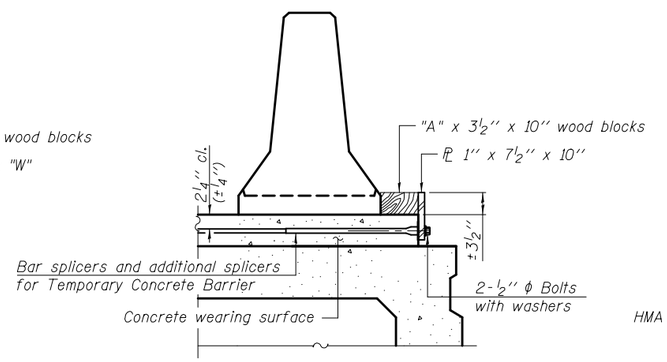

DETAIL II

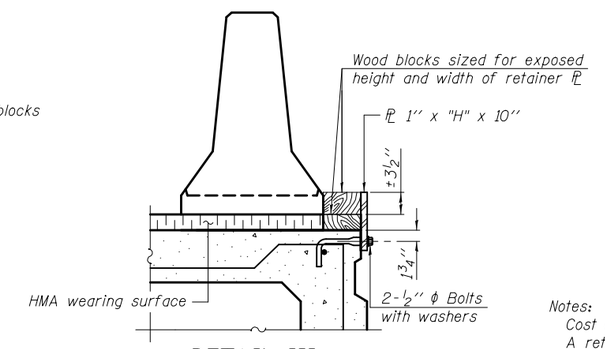

DETAIL III

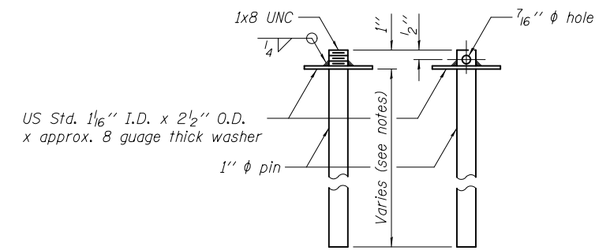

RESTRAINING PIN

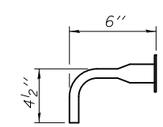

BAR SPLICER FOR #4 BAR - DETAIL III

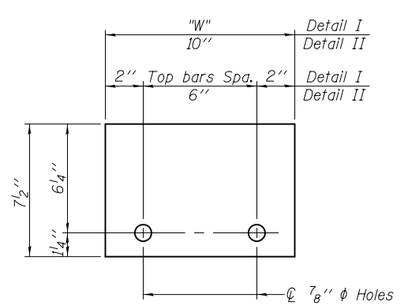

STEEL RETAINER PL 1'' x 7½'' x "W"

(Detail I and II)

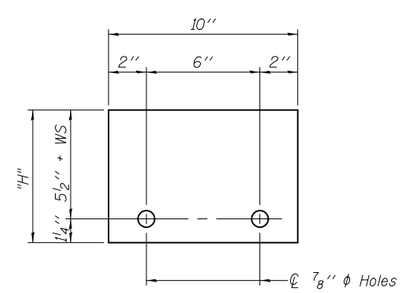

STEEL RETAINER PL 1'' x "H" x 10''

(Detail III)

Notes:

Cost of retainer assembly is included with Temporary Concrete Barrier.

A retainer assembly shall be located at the approximate ℄ of each temporary concrete barrier.

The retainer plate shall not be removed until the concrete on the adjacent stage is ready to be poured. For Detail III applications the retainer plate shall not be removed until just prior to placing the adjacent beam.

When the 'A' dimension is less than 1½'', the wood block shall be omitted and the barrier shall be placed in direct contact with the steel retainer plate. For deck beam applications the minimum required 'A' distance is 6'' to accommodate the shear key clamping device.

Detail I - Installation for a new bridge deck or bridge slab.

Detail II - Installation for a new deck beam with an initial concrete wearing surface. Additional bar splicers shall be provided at 6'-0'' centers and paired with the bar splicers of the concrete wearing surface reinforcement to accommodate the installation of the retainer assemblies. The cost of the additional bar splicers is included with the concrete wearing surface.

Detail III - Installation for a new deck beam with no initial wearing surface or with an initial hot-mix asphalt (HMA) wearing surface present. The deck beam directly beneath the temporary concrete barrier shall be fabricated with bar splicer inserts in the side of the beam, as detailed, to accommodate the installation of the retainer assemblies. A pair of bar splicers, 6'' apart, shall be placed at 6'-0'' centers along the length of the beam. The cost of the bar splicers is included with the deck beam.

R-27

11-22-2016

FILE NAME =	USER NAME =	DESIGNED -	REVISED -	STATE OF ILLINOIS DEPARTMENT OF TRANSPORTATION	TEMPORARY CONCRETE BARRIER FOR STAGE CONSTRUCTION STRUCTURE NO.	F.A. RTE.	SECTION	COUNTY	TOTAL SHEETS / SHEET NO.
		CHECKED -	REVISED -						
	PLOT SCALE =	DRAWN -	REVISED -			CONTRACT NO.			
	PLOT DATE =	CHECKED -	REVISED -			ILLINOIS	FED. AID PROJECT		

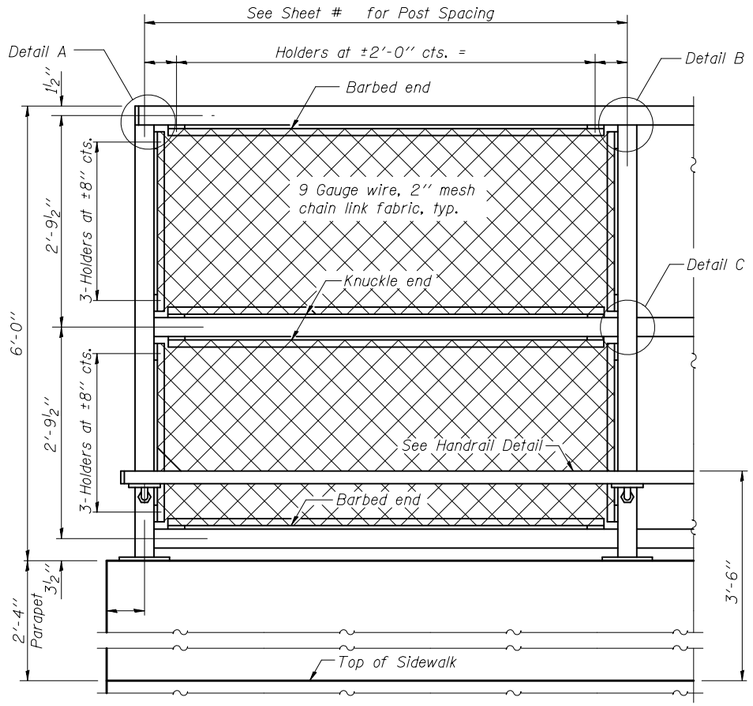

ELEVATION
(Inside Face)

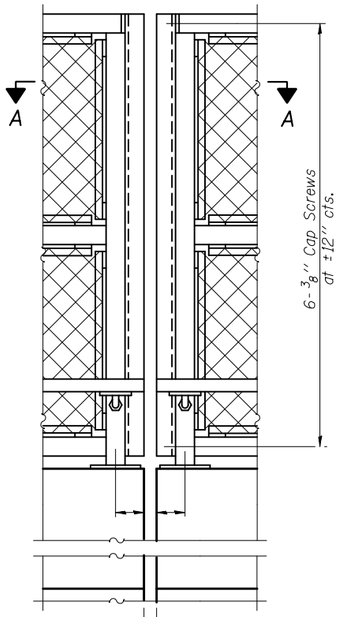

ELEVATION
(At Expansion Joint)

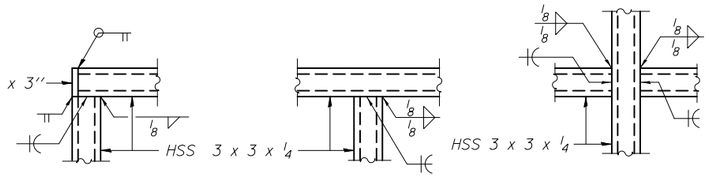

DETAIL A DETAIL B DETAIL C

The designer should add the appropriate note as applicable.
A. When railing is galvanized:
All steel rail elements shall be galvanized according to Article 509.05 of the Standard Specifications.
B. When railing is painted:
All post, railing, splices, anchor devices, and bent plates shall be painted using the (List the appropriate paint system for Structural Steel).

Only one of the above notes would appear on Contract Plans.

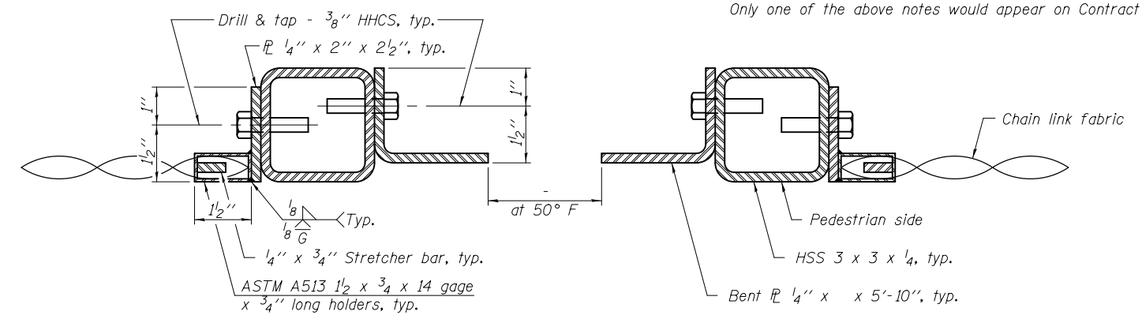

SECTION A-A

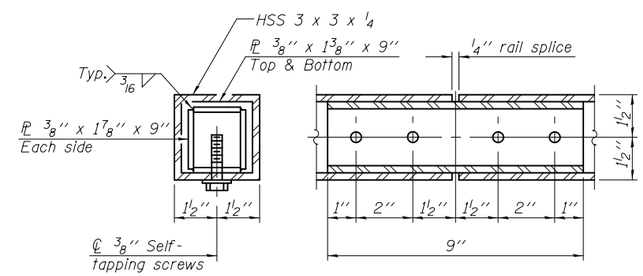

RAIL SPLICE

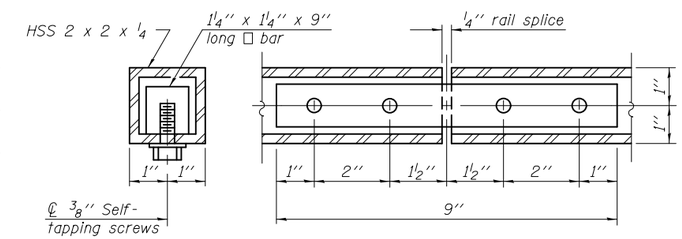

HANDRAIL SPLICE

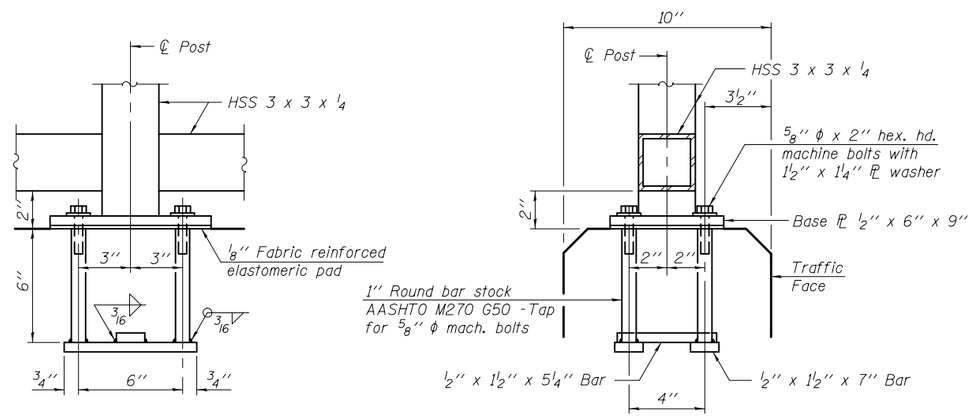

ANCHOR BOLT DETAILS

In lieu of the cast-in-place anchor device shown, the Contractor has the option of drilling and setting ⅝" ϕ anchor rods according to Article 509.06 of the Standard Specifications. Embedment shall be according to the manufacturer's specifications.

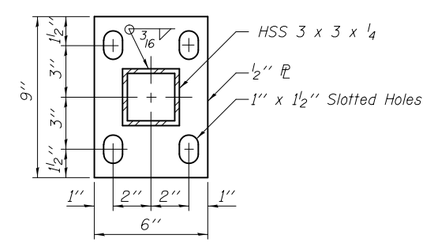

BASE PL

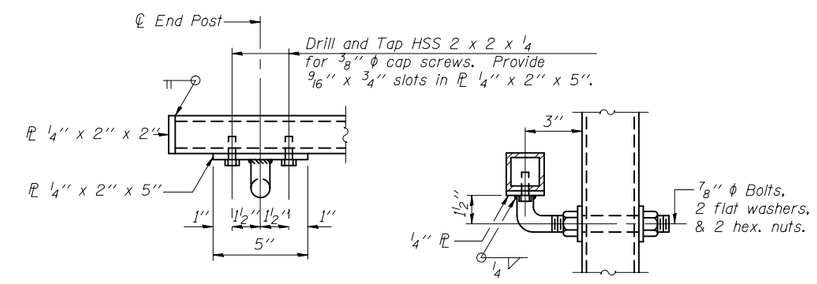

HANDRAIL DETAIL

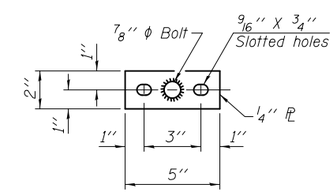

BASE PL
(Handrail)

BILL OF MATERIAL

Item	Unit	Quantity
Bridge Fence Railing	Foot	

R-28 11-22-2016 (10'-0" Maximum Post Spacing)

FILE NAME =	USER NAME =	DESIGNED -	REVISED -	STATE OF ILLINOIS DEPARTMENT OF TRANSPORTATION	BRIDGE FENCE RAILING, PARAPET MOUNTED STRUCTURE NO.	F.A. RTE.	SECTION	COUNTY	TOTAL SHEETS	SHEET NO.
		CHECKED -	REVISED -							
	PLOT SCALE =	DRAWN -	REVISED -					CONTRACT NO.		
	PLOT DATE =	CHECKED -	REVISED -				ILLINOIS	FED. AID PROJECT		

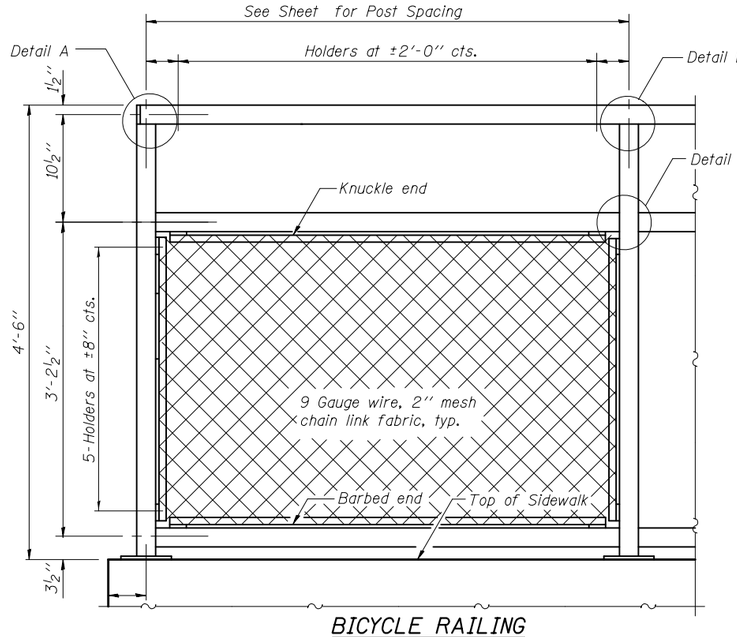

BICYCLE RAILING

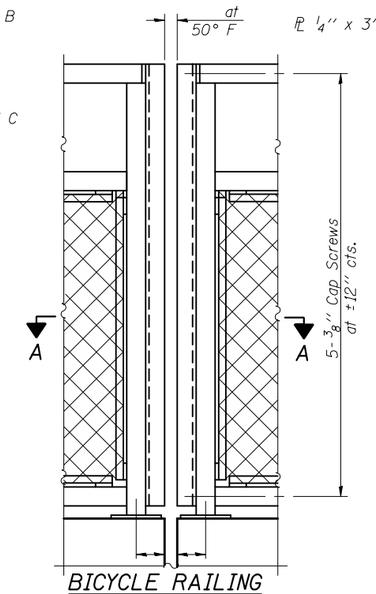

BICYCLE RAILING

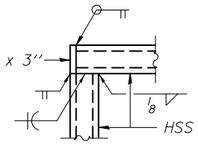

DETAIL A

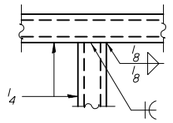

DETAIL B

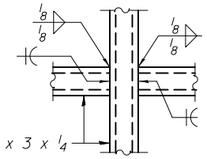

DETAIL C

The designer should add the appropriate note as applicable.
A. When railing is galvanized:
All steel rail elements shall be galvanized according to Article 509.05 of the Standard Specifications.
B. When railing is painted:
All post, railing, splices, anchor devices, and bent plates shall be painted using the (List the appropriate paint system for Structural Steel).

Only one of the above notes would appear on Contract Plans.

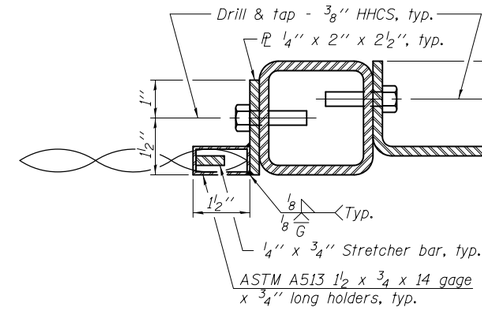

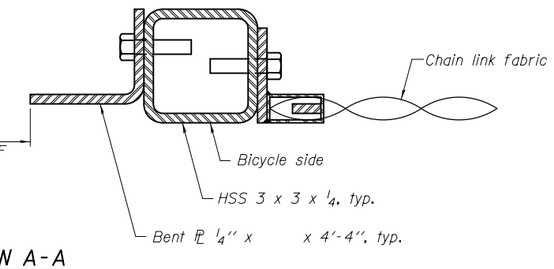

SECTION A-A

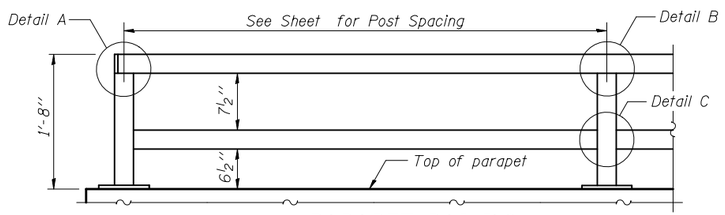

PARAPET RAILING
ELEVATION
(Inside Face of Two Element Rail)

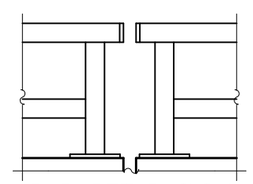

PARAPET RAILING
ELEVATION AT EXPANSION JOINT
(Two Element Rail Shown - Three Element Rail Similar)

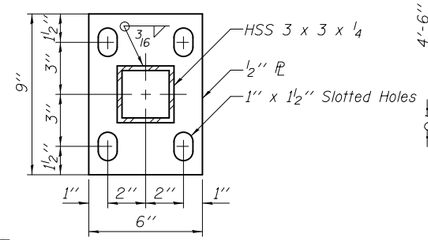

BASE PL

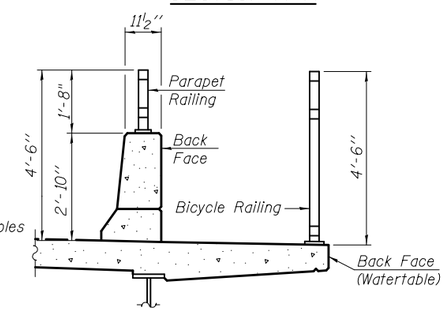

SECTION THRU DECK

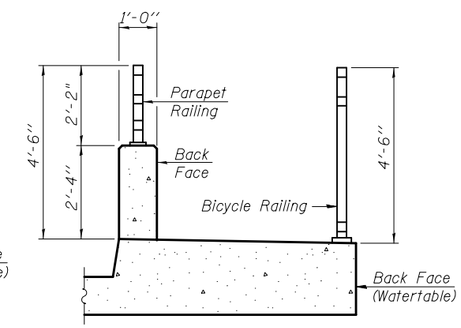

SECTION THRU SIDEWALK

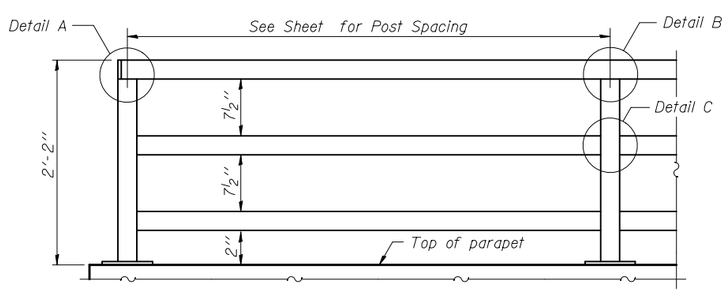

PARAPET RAILING
ELEVATION
(Inside Face of Three Element Rail)

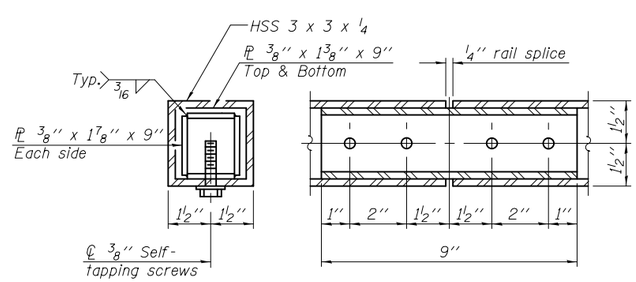

RAIL SPLICE

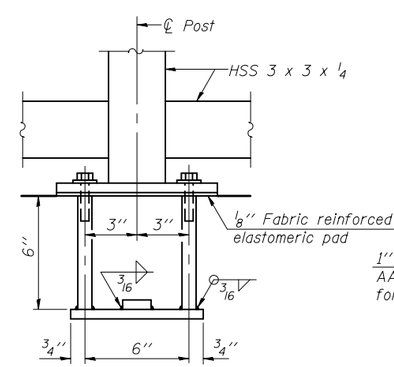

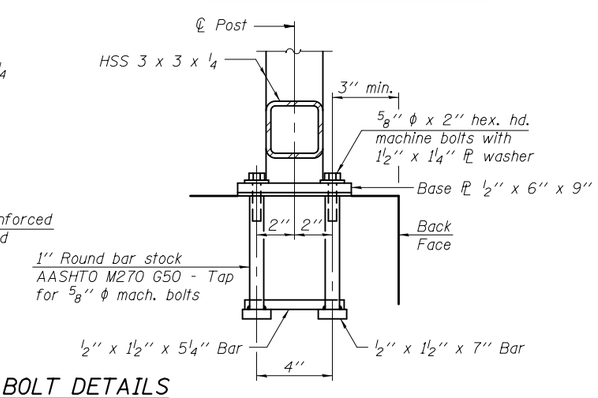

ANCHOR BOLT DETAILS

In lieu of the cast-in-place anchor device shown, the Contractor has the option of drilling and setting ⅝" ϕ anchor rods according to Article 509.06 of the Standard Specifications. Embedment shall be according to the manufacturer's specifications.

BILL OF MATERIAL

Item	Unit	Quantity
Bicycle Railing	Foot	
Parapet Railing	Foot	

Notes:
All structural steel tubing, post and railing, for parapet railing shall be CVN tested according to 1006.34(b) of the Standard Specifications.

R-29 11-22-2016 (10'-0" Maximum Post Spacing)

FILE NAME =	USER NAME =	DESIGNED -	REVISED -
		CHECKED -	REVISED -
	PLOT SCALE =	DRAWN -	REVISED -
	PLOT DATE =	CHECKED -	REVISED -

STATE OF ILLINOIS
DEPARTMENT OF TRANSPORTATION

BICYCLE RAILING
STRUCTURE NO.

F.A. RTE.	SECTION	COUNTY	TOTAL SHEETS	SHEET NO.

CONTRACT NO.
ILLINOIS FED. AID PROJECT

Notes:

For multi-span bridges, sufficient 1/4'' x 6'' x 1'-2'' galvanized steel shims shall be provided to align rail between adjacent spans. Cost included with Steel Railing, Type WT.

All steel rail members shall be galvanized according to Article 509.05 of the Standard Specifications.

*** The studs of the anchor devices shall be placed below the top reinforcement bars and the outermost longitudinal reinforcement bar shall be placed directly above the studs of the rail post anchor device. The anchorage studs may be bent down 1/2'' to accommodate the top reinforcement bar placement.

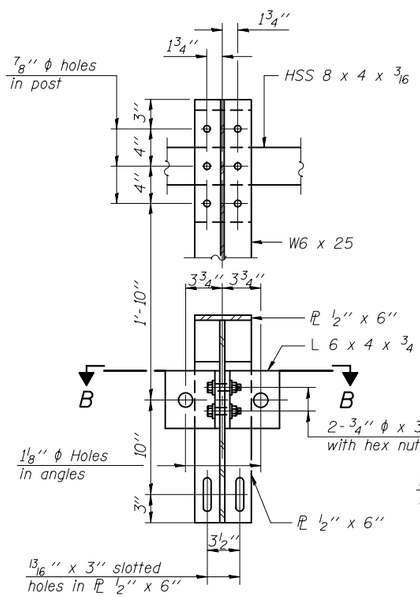

SECTION A-A

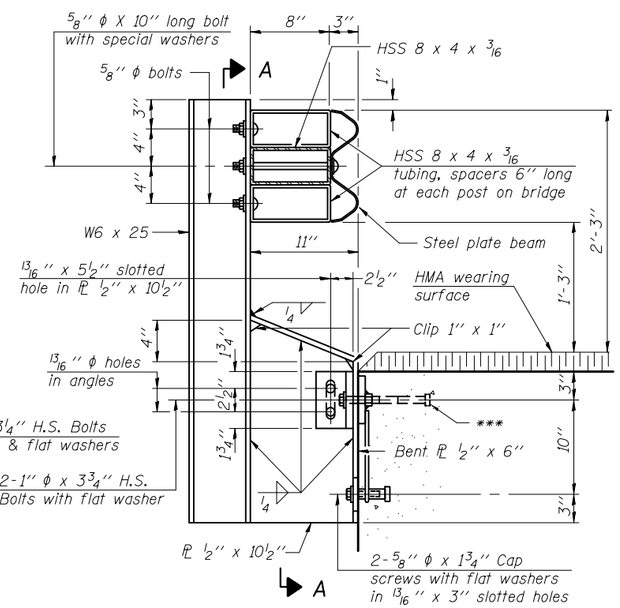

SECTION AT RAIL POST

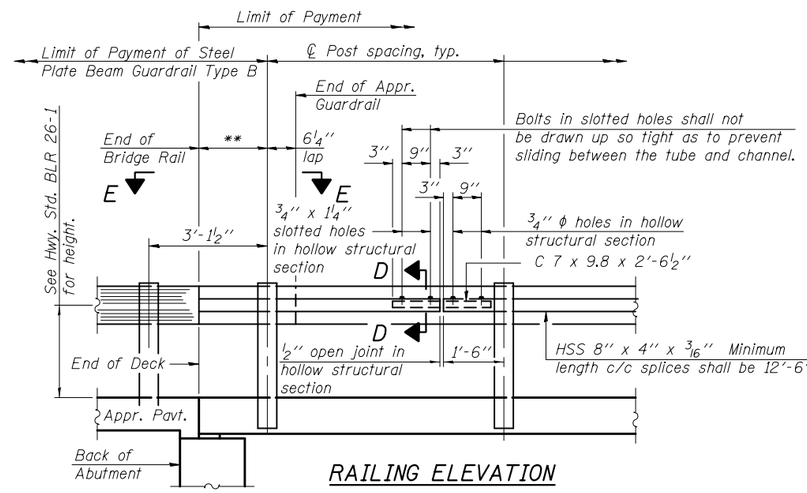

RAILING ELEVATION

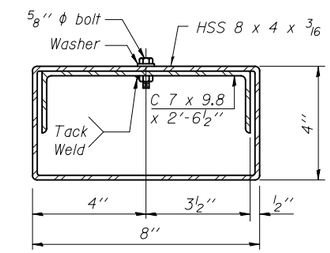

SECTION D-D

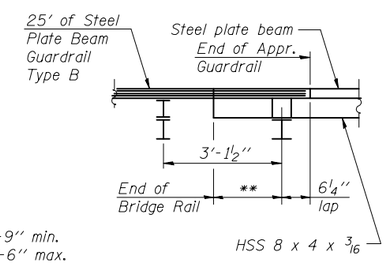

VIEW E-E

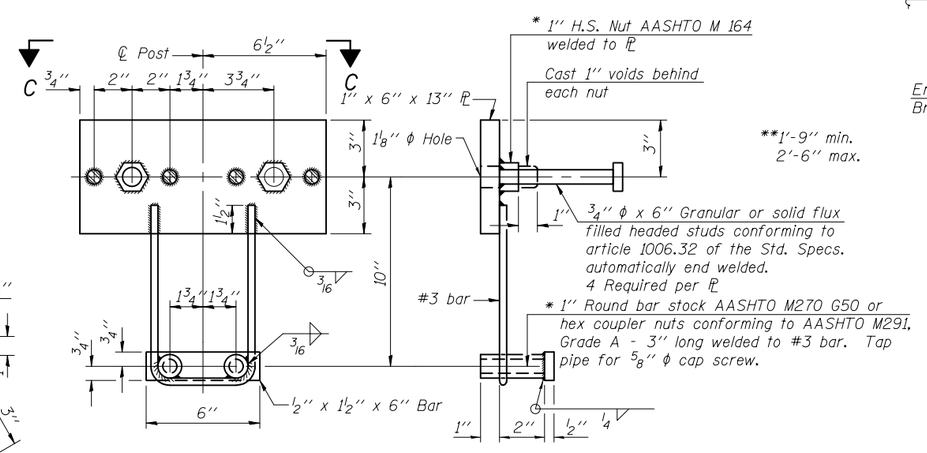

ANCHOR DEVICE

* Threaded areas shall be plugged or blocked off during casting of beam.

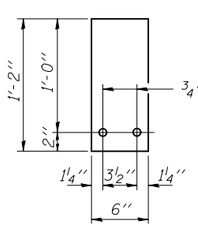

1/4'' SHIM PLATE

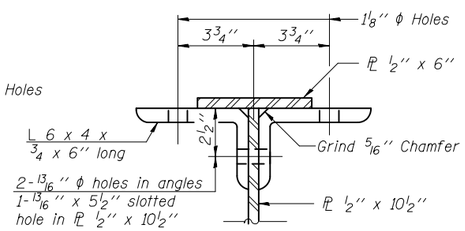

SECTION B-B

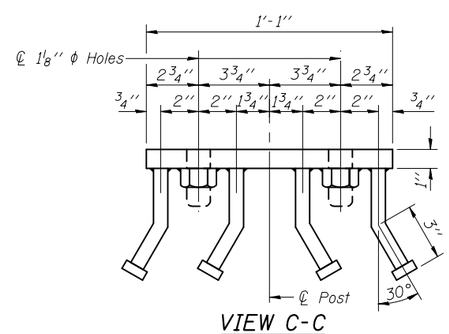

VIEW C-C

BILL OF MATERIAL

Item	Unit	Quantity
Steel Railing, Type WT	Foot	

R-30 11-22-2016 6'-3'' Maximun Post Spacing

FILE NAME =	USER NAME =	DESIGNED -	REVISED -	STATE OF ILLINOIS DEPARTMENT OF TRANSPORTATION	STEEL RAILING, TYPE WT STRUCTURE NO.	F.A. RTE.	SECTION	COUNTY	TOTAL SHEETS	SHEET NO.
		CHECKED -	REVISED -							
	PLOT SCALE =	DRAWN -	REVISED -					CONTRACT NO.		
	PLOT DATE =	CHECKED -	REVISED -				ILLINOIS	FED. AID PROJECT		

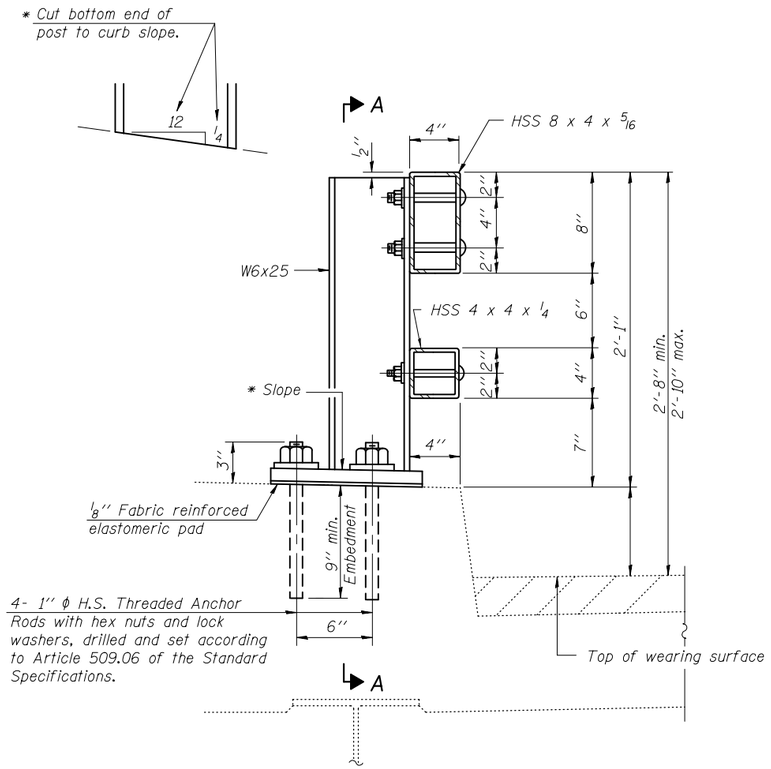

SECTION AT RAIL POST

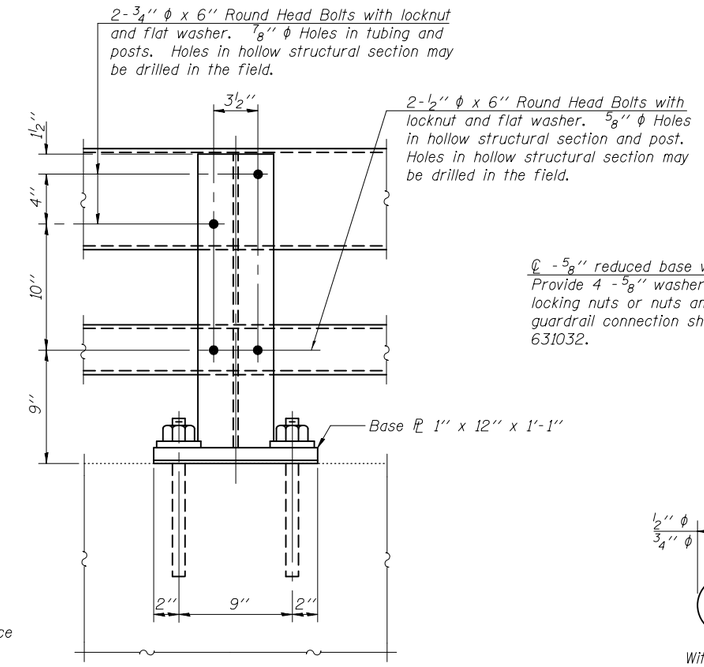

SECTION A-A

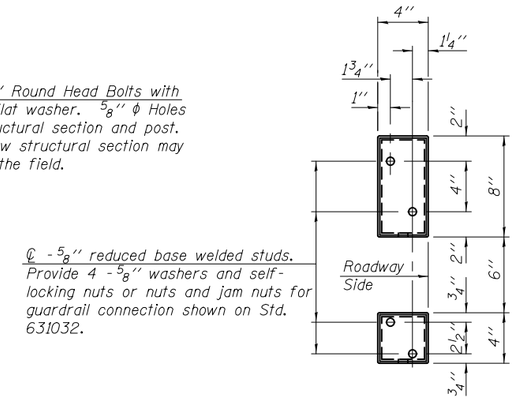

VIEW B-B

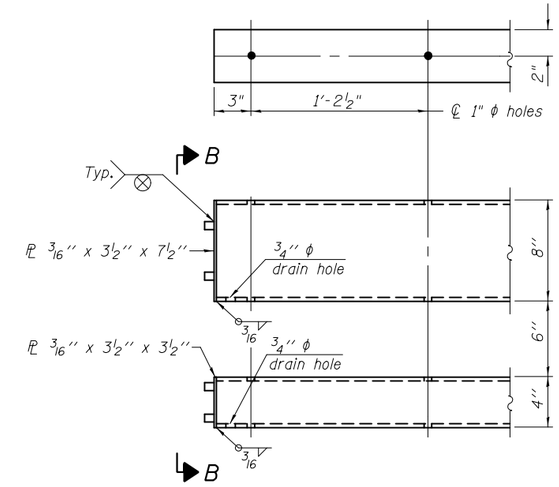

END OF RAIL DETAILS

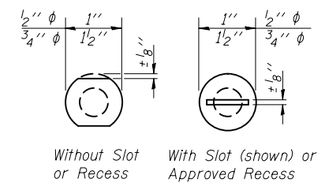

VIEW C-C

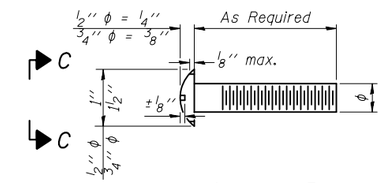

DETAIL OF 1/2" ϕ & 3/4" ϕ ROUND HEAD BOLTS

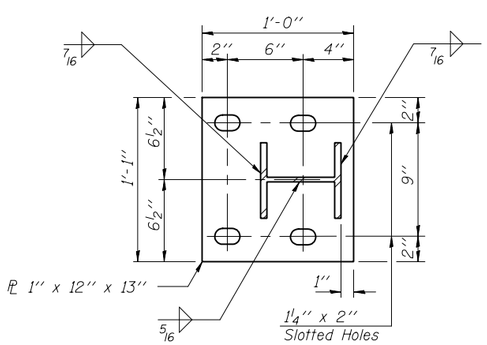

BASE PLATE DETAIL

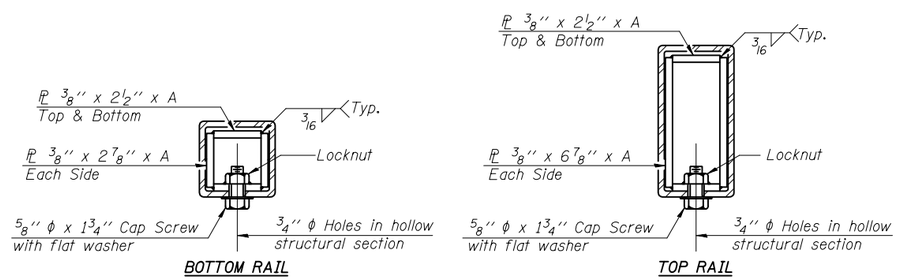

SECTIONS AT RAIL SPLICE

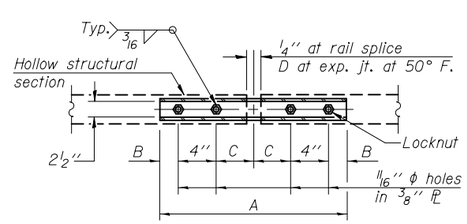

PLAN-BOTT. SPLICE PL TYPICAL

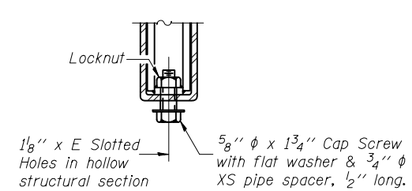

RAIL SPLICE CONNECTION AT EXPANSION JT.

Notes:

Posts shall not be located closer than 1'-3" to an existing bridge expansion joint or end of bridge.

Steel Bridge Rail expansion joint shall be provided between any two (2) posts which span a bridge expansion joint. Bolts located at expansion joint shall be provided with locknuts and shall be tightened only to a point that will allow railing movement.

Provide one 1/8" and two 1/16" steel shims for 25% of the posts. Shims shall be similar to base plates in size and holes.

All steel rail elements shall be galvanized according to Article 509.05 of the Standard Specifications.

SPLICE DIMENSIONS

T	D	A	B	C	E
≤4"	2 1/2"	1'-8"	2"	4"	2 1/2"
>4"≤6 1/2"	3 3/4"	2'-0"	2 1/2"	5 1/2"	3 1/2"
>6 1/2"≤9"	5"	2'-4"	3 1/2"	6 1/2"	9"
>9"≤13"	7"	2'-10"	4 1/2"	8 1/2"	11"
Rail Splice	1/4"	1'-8"	2"	4"	—

T = Total movement at expansion joint as shown on the design plans.

BILL OF MATERIAL

Item	Unit	Quantity
Steel Railing, Type 2399	Foot	

R-31 11-22-2016 (6'-3" Maximum Post Spacing)

FILE NAME =	USER NAME =	DESIGNED -	REVISED -	STATE OF ILLINOIS DEPARTMENT OF TRANSPORTATION	STEEL RAILING, TYPE 2399 STRUCTURE NO.	F.A. RTE.	SECTION	COUNTY	TOTAL SHEETS	SHEET NO.
		CHECKED -	REVISED -							
	PLOT SCALE =	DRAWN -	REVISED -					CONTRACT NO.		
	PLOT DATE =	CHECKED -	REVISED -				ILLINOIS	FED. AID PROJECT		

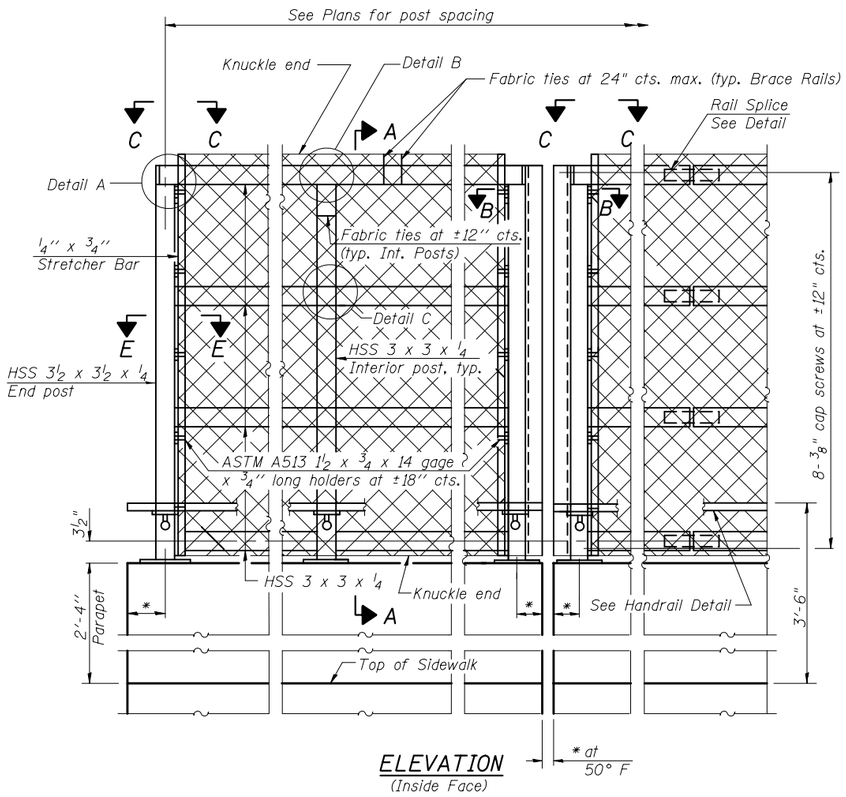

ELEVATION
(Inside Face)

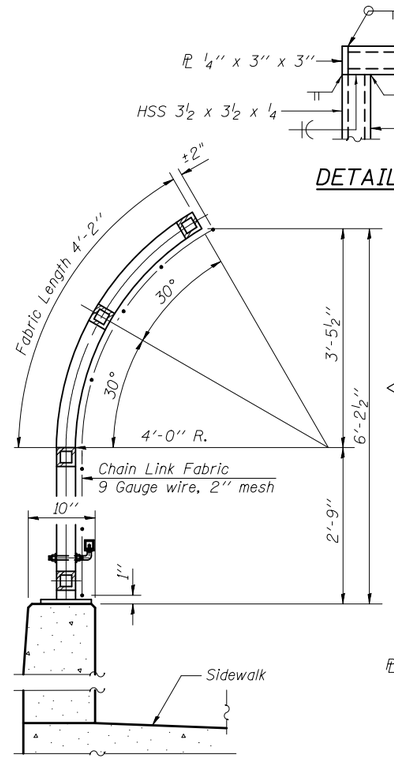

SECTION A-A

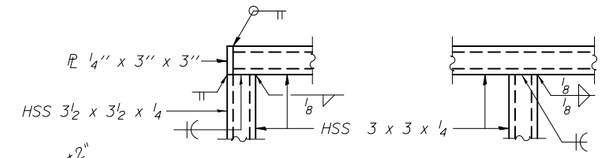

DETAIL A

DETAIL B

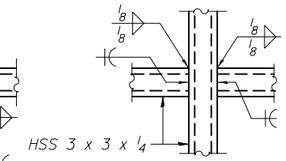

DETAIL C

The designer should add the appropriate note as applicable.
A. When railing is galvanized:
All steel rail elements shall be galvanized according to Article 509.05 of the Standard Specifications.
B. When railing is painted:
All post, railing, splices, anchor devices, and plates shall be painted using the (List the appropriate paint system for Structural Steel).

Only one of the above notes would appear on Contract Plans.

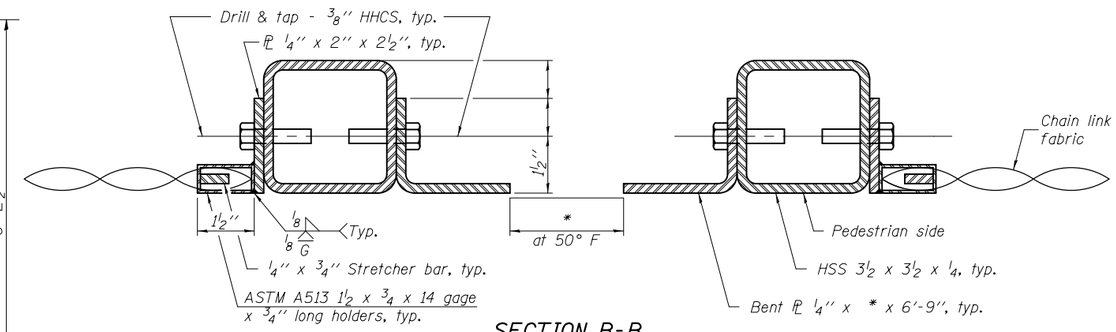

SECTION B-B
(At Expansion Joint)

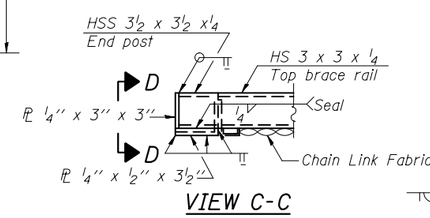

VIEW C-C

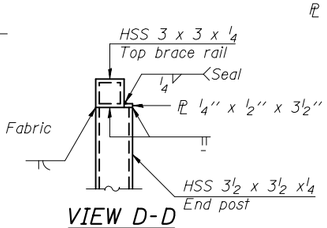

VIEW D-D

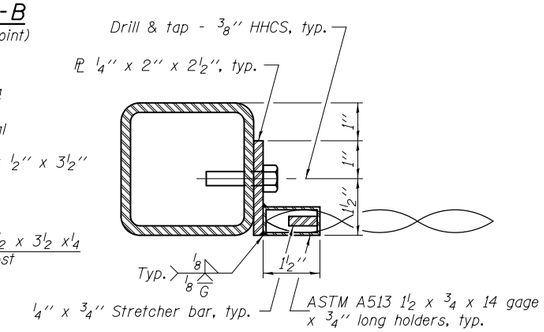

SECTION E-E

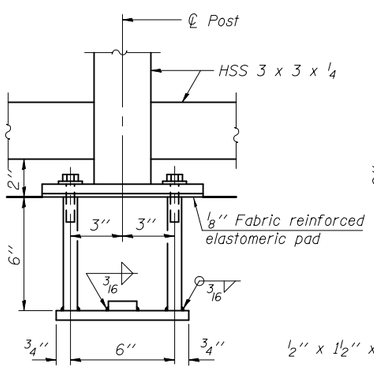

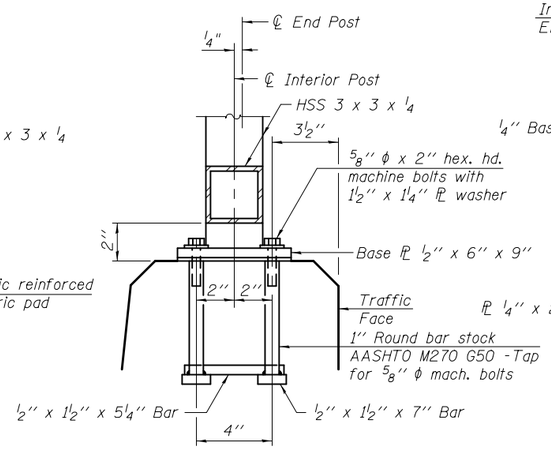

ANCHOR BOLT DETAILS

In lieu of the cast-in-place anchor device shown, the Contractor has the option of drilling and setting 5/8" ϕ anchor rods according to Article 509.06 of the Standard Specifications. Embedment shall be according to the manufacturer's specifications.

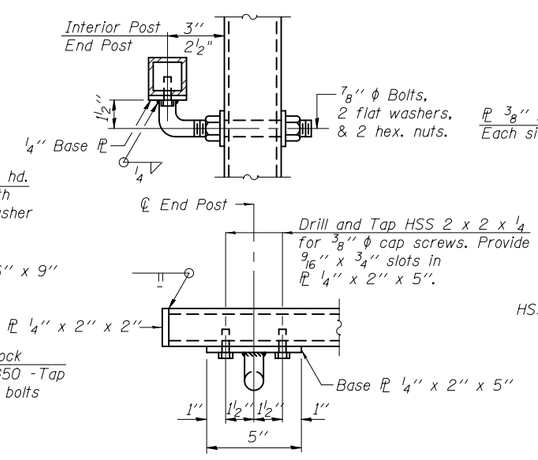

HANDRAIL DETAIL

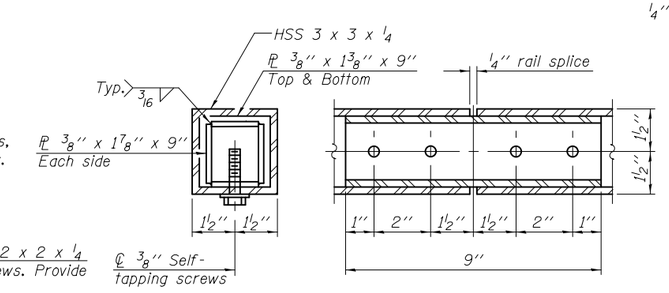

RAIL SPLICE

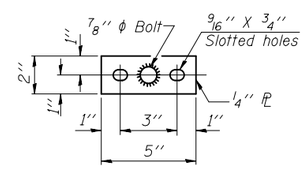

BASE PL
(Handrail)

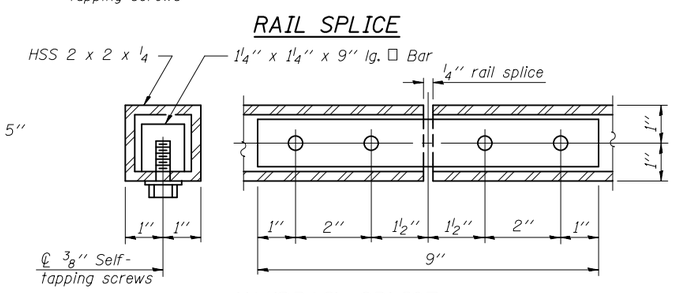

HANDRAIL SPLICE

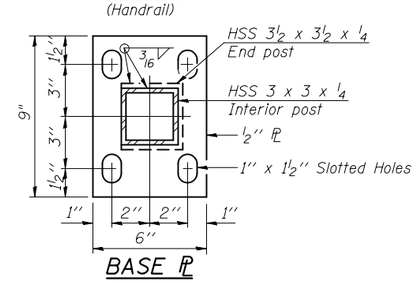

BASE PL

BILL OF MATERIAL

Item	Unit	Quantity
Bridge Fence Railing	Foot	

*Variable - See Plans (10'-0" Maximum Post Spacing)

R-32 11-22-2016

FILE NAME =	USER NAME =	DESIGNED -	REVISED -
		CHECKED -	REVISED -
	PLOT SCALE =	DRAWN -	REVISED -
	PLOT DATE =	CHECKED -	REVISED -

STATE OF ILLINOIS
DEPARTMENT OF TRANSPORTATION

BRIDGE FENCE RAILING, PARAPET MOUNTED
STRUCTURE NO.

F.A. RTE.	SECTION	COUNTY	TOTAL SHEETS	SHEET NO.

CONTRACT NO.

ILLINOIS FED. AID PROJECT

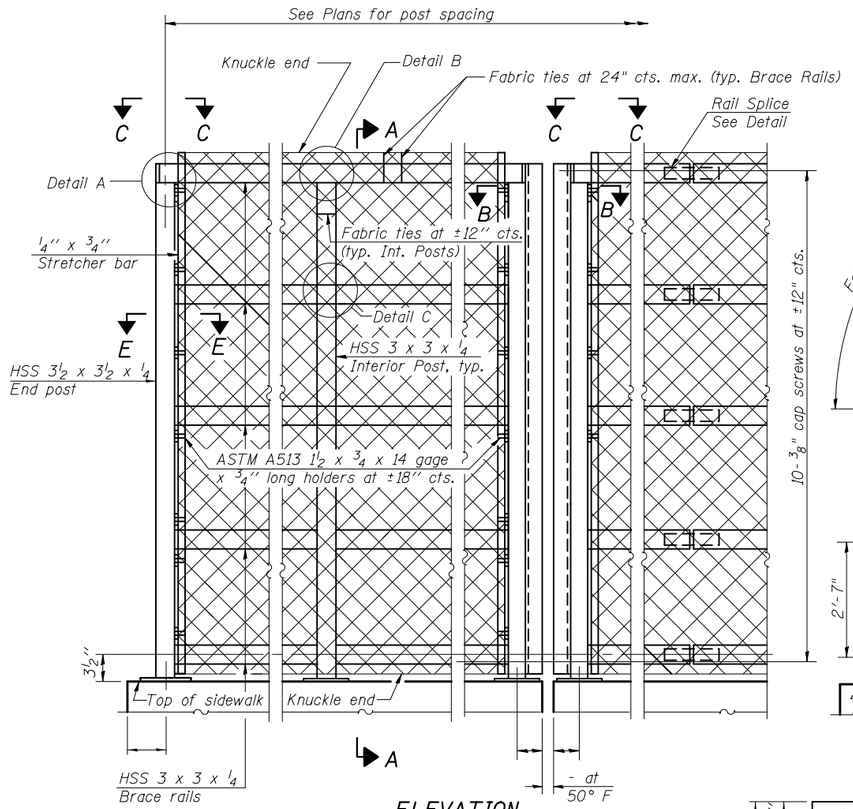

ELEVATION
(Inside Face)

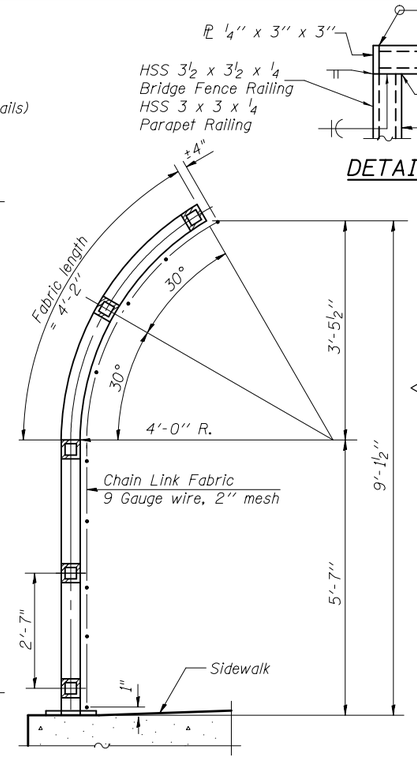

SECTION A-A

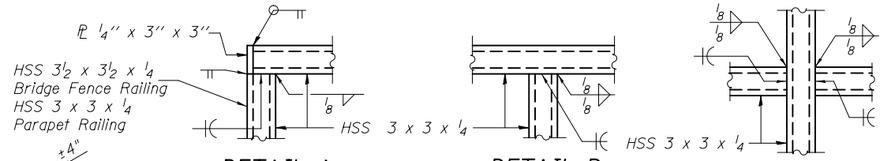

DETAIL A DETAIL B DETAIL C

The designer should add the appropriate note as applicable.
A. When railing is galvanized:
All steel rail elements shall be galvanized according to Article 509.05 of the Standard Specifications.
B. When railing is painted:
All post, railing, splices, anchor devices, and plates shall be painted using the (List the appropriate paint system for Structural Steel).

Only one of the above notes would appear on Contract Plans.

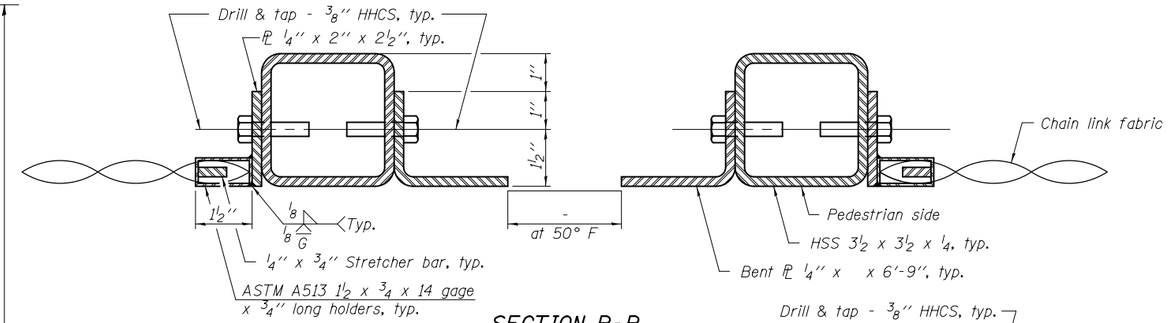

SECTION B-B
(At Expansion Joint)

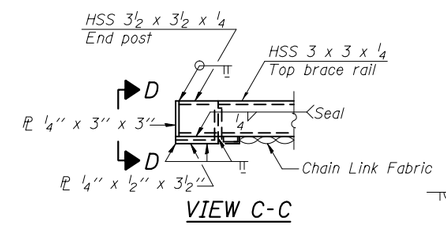

VIEW C-C

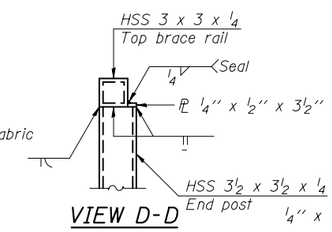

VIEW D-D

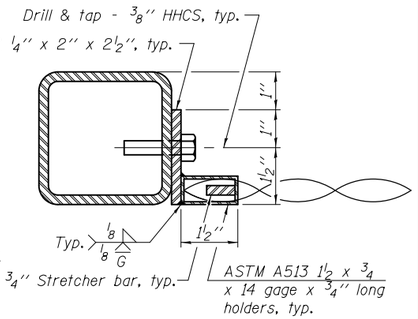

SECTION E-E

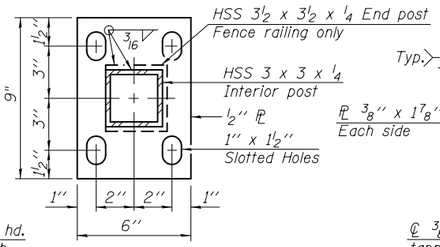

BASE PL

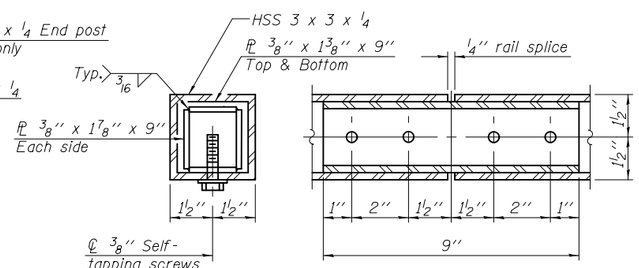

RAIL SPLICE

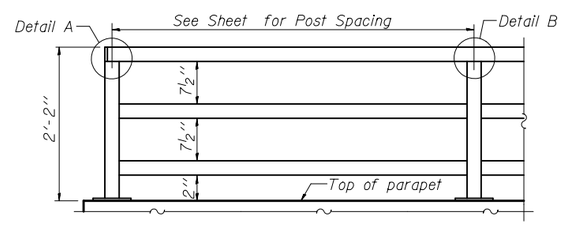

PARAPET RAILING ELEVATION
(Inside Face of Three Element Rail)

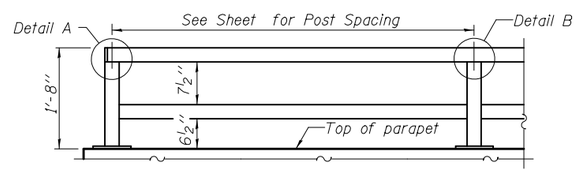

PARAPET RAILING ELEVATION
(Inside face of two element rail)

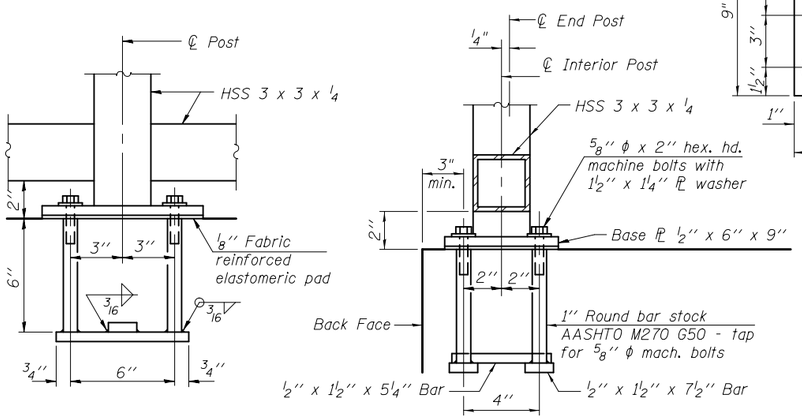

ANCHOR BOLT DETAILS

In lieu of the cast-in-place anchor device shown, the Contractor has the option of drilling and setting 5/8" φ anchor rods according to Article 509.06 of the Standard Specifications. Embedment shall be according to the manufacturer's specifications.

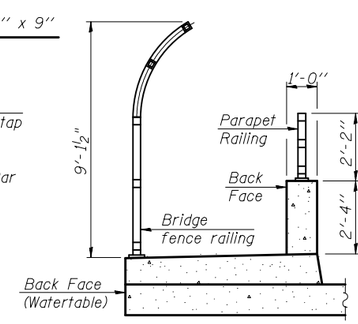

SECTION THRU SIDEWALK

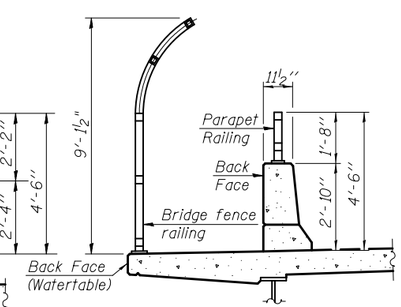

SECTION THRU DECK

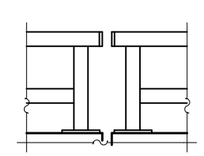

PARAPET RAILING ELEVATION AT EXPANSION JOINT
(Two element rail shown - Three element rail similar)

Notes:
All structural steel tubing, post and railing, for parapet railing shall be CVN tested according to 1006.34(b) of the Standard Specifications.

BILL OF MATERIAL

Item	Unit	Quantity
Bridge Fence Railing (Sidewalk)	Foot	
Parapet Railing	Foot	

R-33 11-22-2016 (10'-0" Maximum Post Spacing)

FILE NAME =	USER NAME =	DESIGNED -	REVISED -
		CHECKED -	REVISED -
	PLOT SCALE =	DRAWN -	REVISED -
	PLOT DATE =	CHECKED -	REVISED -

STATE OF ILLINOIS
DEPARTMENT OF TRANSPORTATION

BRIDGE FENCE RAILING, SIDEWALK MOUNTED
STRUCTURE NO.

F.A. RTE.	SECTION	COUNTY	TOTAL SHEETS	SHEET NO.

CONTRACT NO.
ILLINOIS FED. AID PROJECT

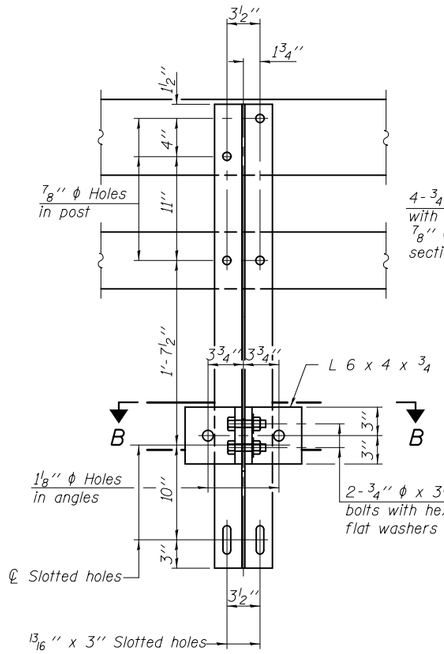

SECTION A-A

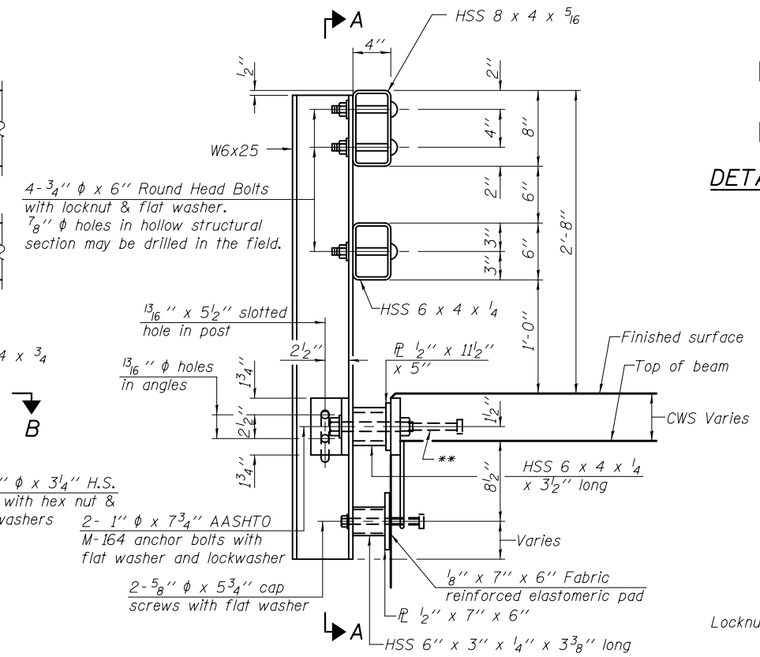

SECTION AT RAIL POST

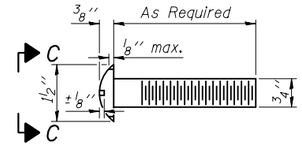

DETAIL OF ¾" ϕ ROUND HEAD BOLT

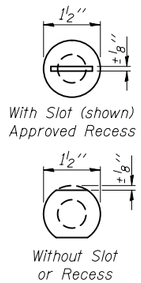

VIEW C-C

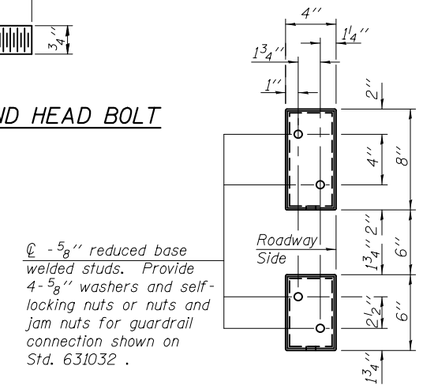

VIEW D-D

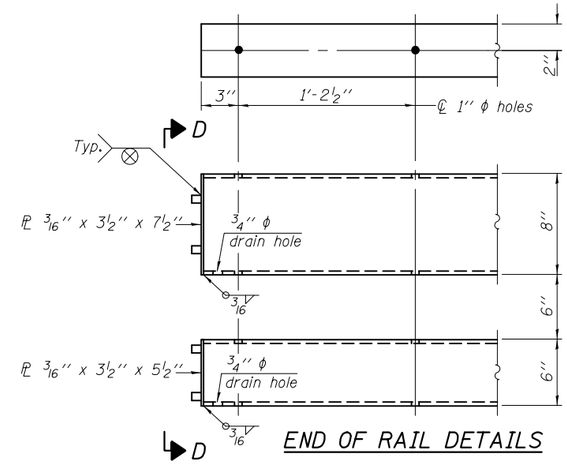

END OF RAIL DETAILS

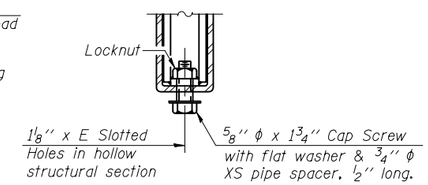

RAIL SPLICE CONNECTION AT EXPANSION JT.

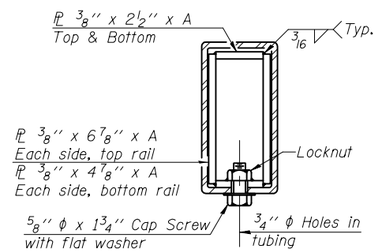

SECTION AT RAIL SPLICE

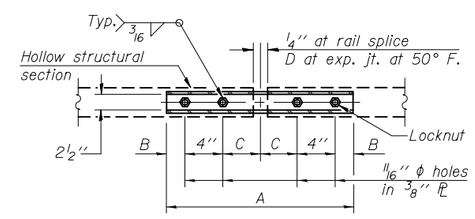

PLAN-BOTT. SPLICE PL TYPICAL

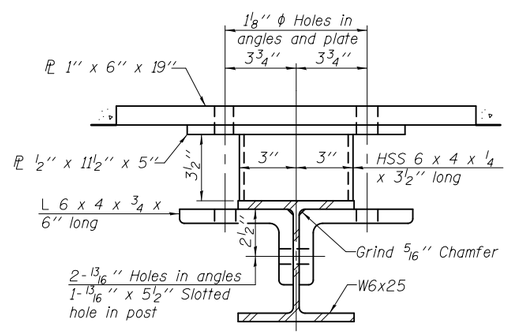

SECTION B-B

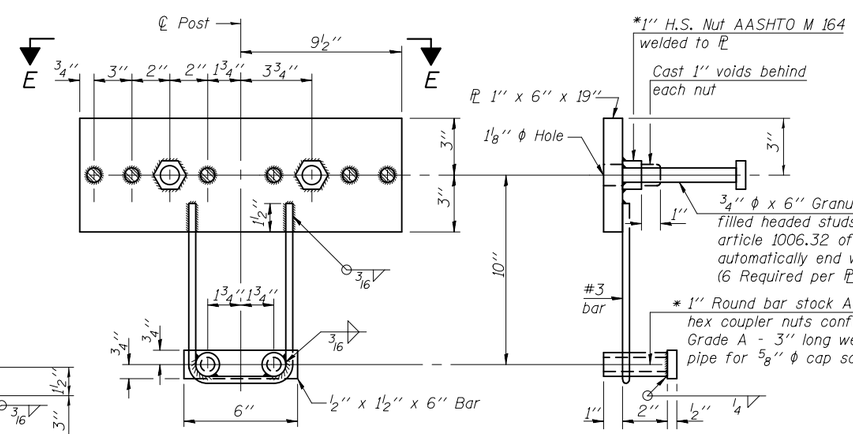

ANCHOR DEVICE

*Threaded areas shall be plugged or blocked off during casting of beam. Galvanized after fabrication.

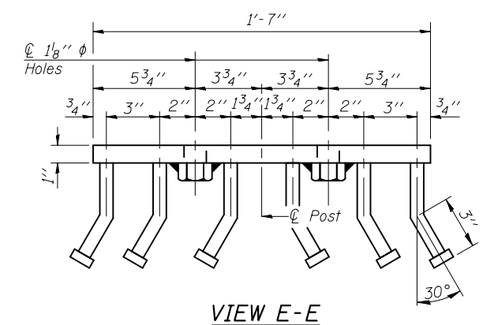

VIEW E-E

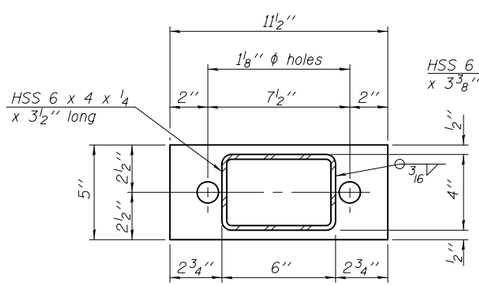

PL ½" x 11½" x 5"

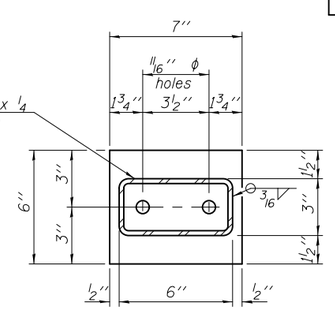

PL ½" x 7" x 6"

SPLICE DIMENSIONS

T	D	A	B	C	E
≤4"	2½"	1'-8"	2"	4"	2½"
>4" ≤6½"	3¾"	2'-0"	2½"	5½"	3½"
>6½" ≤9"	5"	2'-4"	3½"	6½"	9"
>9" ≤13"	7"	2'-10"	4½"	8½"	11"
Rail Splice	¼"	1'-8"	2"	4"	——

T = Total movement at expansion joint as shown on the design plans.

Notes:

For multi-span bridges, sufficient ¼" x 6" x 1'-2" galvanized steel shims shall be provided to align rail between adjacent spans. Cost included with Steel Railing, Type SM.

Steel rail elements shall be galvanized according to Article 509.05 of the Standard Specifications.

** The studs of the anchor devices shall be placed below the top reinforcement bars and the outermost longitudinal reinforcement bar shall be placed directly above the studs of the rail post anchor device.

BILL OF MATERIAL

Item	Unit	Quantity
Steel Railing, Type SM	Foot	

R-34CWS 11-22-2016 (6'-3" Maximum Post Spacing) (5" minimum to 7⅛" maximum CWS thickness)

FILE NAME =	USER NAME =	DESIGNED -	REVISED -
		CHECKED -	REVISED -
	PLOT SCALE =	DRAWN -	REVISED -
	PLOT DATE =	CHECKED -	REVISED -

STATE OF ILLINOIS
DEPARTMENT OF TRANSPORTATION

STEEL RAILING, TYPE SM WITH CONCRETE WEARING SURFACE
STRUCTURE NO.

F.A. RTE.	SECTION	COUNTY	TOTAL SHEETS	SHEET NO.

CONTRACT NO.

ILLINOIS FED. AID PROJECT

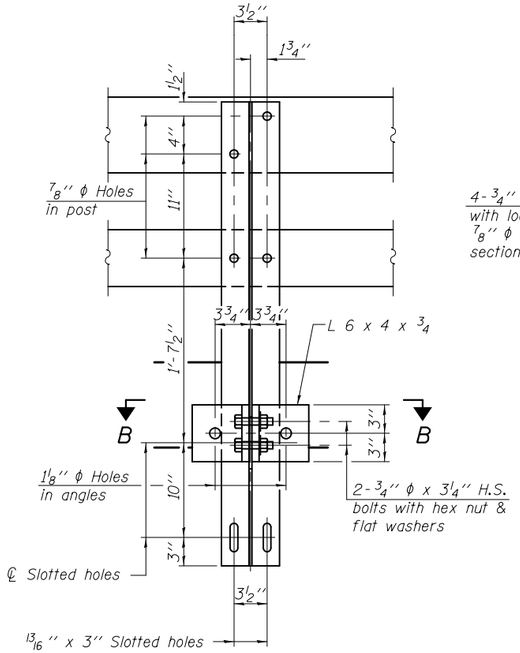

SECTION A-A

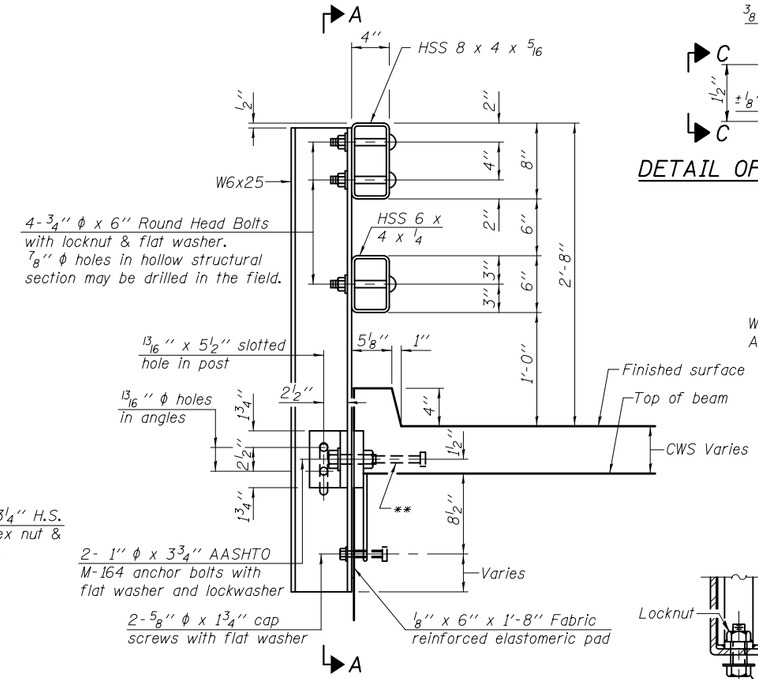

SECTION AT RAIL POST

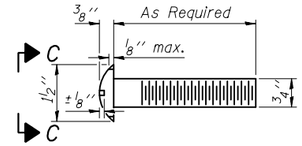

DETAIL OF ¾'' ϕ ROUND HEAD BOLT

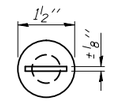

With Slot (shown) or Approved Recess

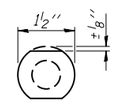

Without Slot or Recess

VIEW C-C

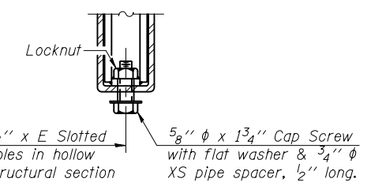

RAIL SPLICE CONNECTION AT EXPANSION JT.

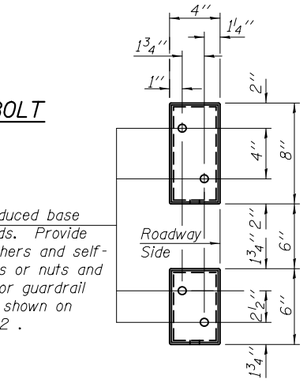

VIEW D-D

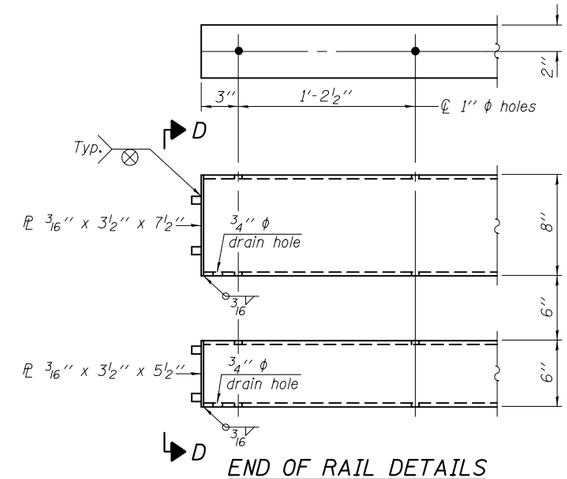

END OF RAIL DETAILS

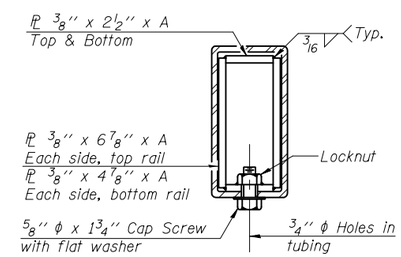

SECTION AT RAIL SPLICE

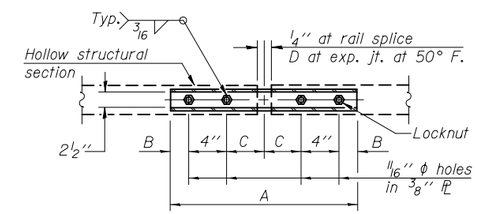

PLAN-BOTT. SPLICE PL TYPICAL

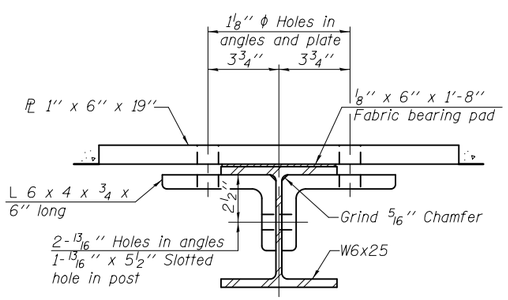

SECTION B-B

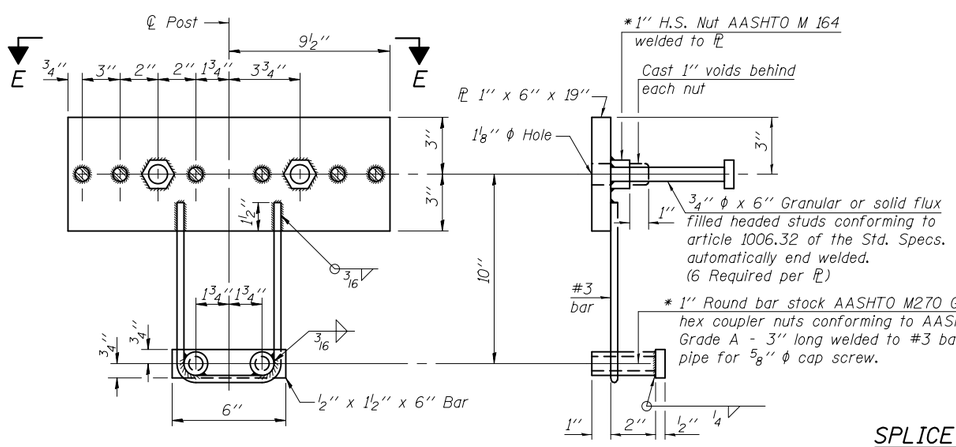

ANCHOR DEVICE

* Threaded areas shall be plugged or blocked off during casting of beam. Galvanized after fabrication.

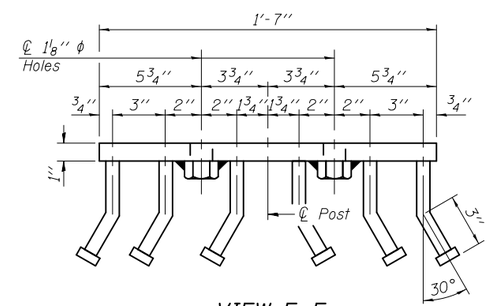

VIEW E-E

Notes:

For multi-span bridges, sufficient ¼'' x 6'' x 1'-2'' galvanized steel shims shall be provided to align rail between adjacent spans. Cost included with Steel Railing, Type SM.

All steel railing elements shall be galvanized according to Article 509.05 of the Standard Specifications.

** The studs of the anchor devices shall be placed below the top reinforcement bars and the outermost longitudinal reinforcement bar shall be placed directly above the studs of the rail post anchor device.

SPLICE DIMENSIONS

T	D	A	B	C	E
≤4''	2½''	1'-8''	2''	4''	2½''
>4'' ≤6½''	3¾''	2'-0''	2½''	5½''	3½''
>6½'' ≤9''	5''	2'-4''	3½''	6½''	9''
>9'' ≤13''	7''	2'-10''	4½''	8½''	11''
Rail Splice	¼''	1'-8''	2''	4''	——

T = Total movement at expansion joint as shown on the design plans.

BILL OF MATERIAL

Item	Unit	Quantity
Steel Railing, Type SM	Foot	

R-34CWSC 11-22-2016 (6'-3'' Maximum Post Spacing) (5'' minimum to 7⅛'' maximum CWS thickness)

FILE NAME =	USER NAME =	DESIGNED -	REVISED -
		CHECKED -	REVISED -
	PLOT SCALE =	DRAWN -	REVISED -
	PLOT DATE =	CHECKED -	REVISED -

STATE OF ILLINOIS
DEPARTMENT OF TRANSPORTATION

STEEL RAILING, TYPE SM WITH CONCRETE WEARING SURFACE & CURB
STRUCTURE NO.

F.A. RTE.	SECTION	COUNTY	TOTAL SHEETS	SHEET NO.

CONTRACT NO.

ILLINOIS FED. AID PROJECT

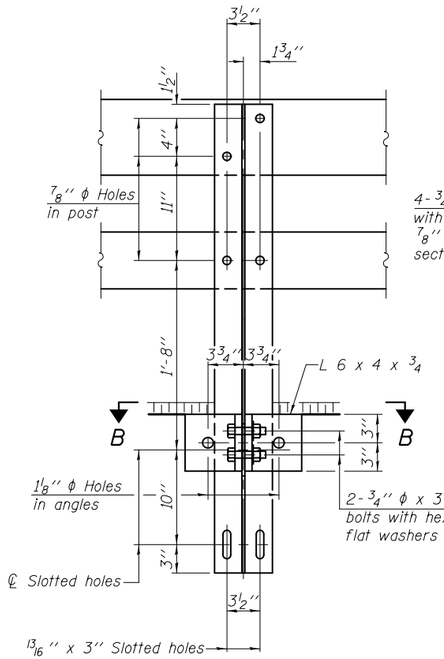

SECTION A-A

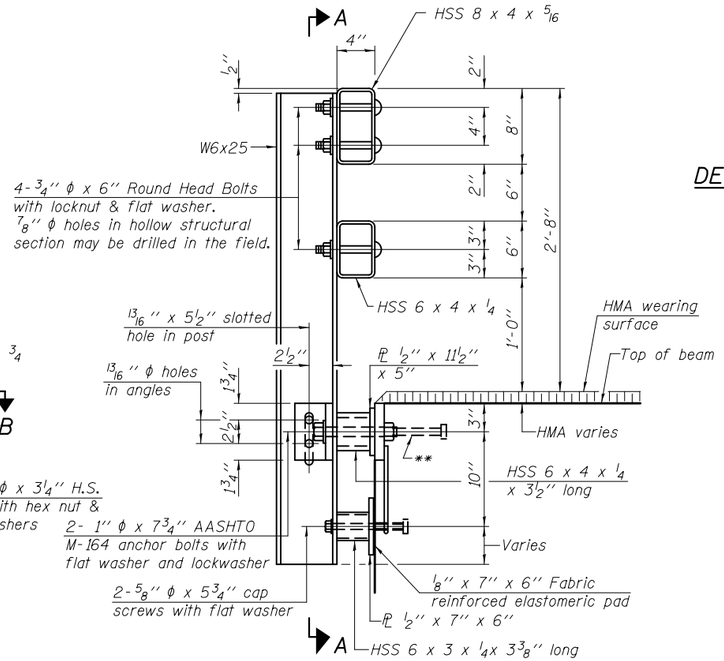

SECTION AT RAIL POST

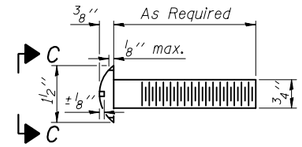

DETAIL OF 3/4" φ ROUND HEAD BOLT

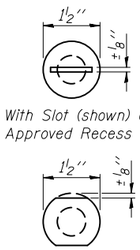

VIEW C-C

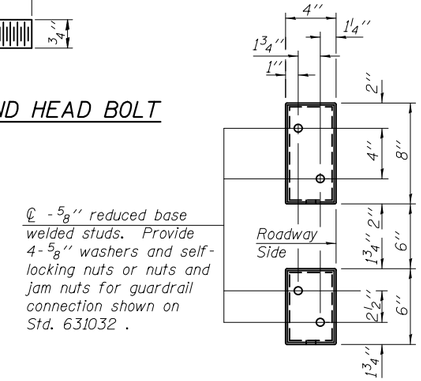

VIEW D-D

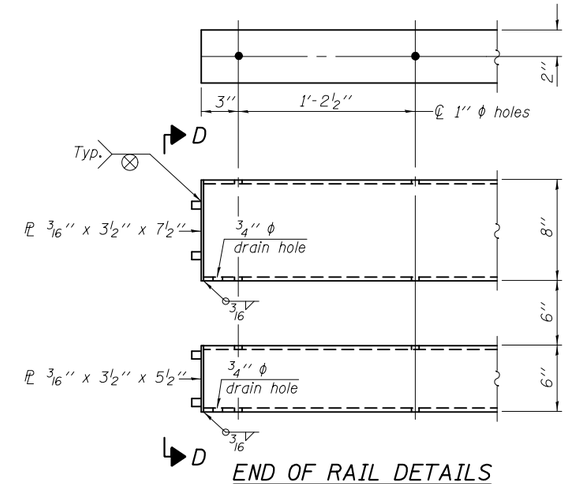

END OF RAIL DETAILS

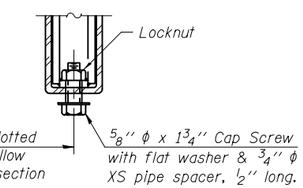

RAIL SPLICE CONNECTION AT EXPANSION JT.

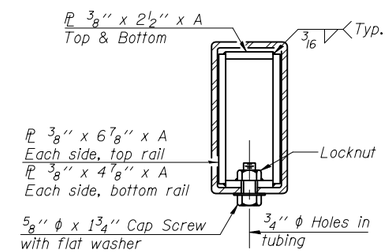

SECTION AT RAIL SPLICE

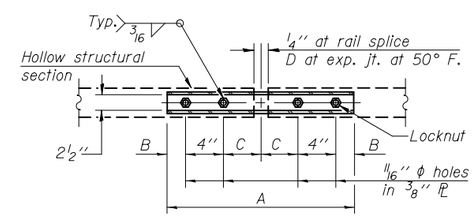

PLAN-BOTT. SPLICE PL TYPICAL

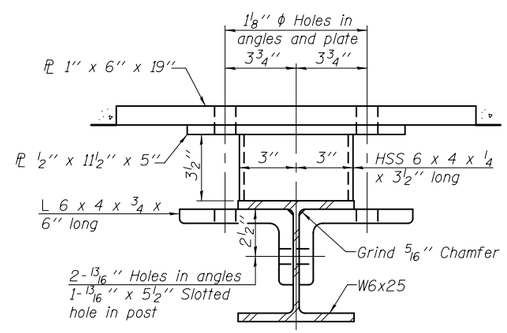

SECTION B-B

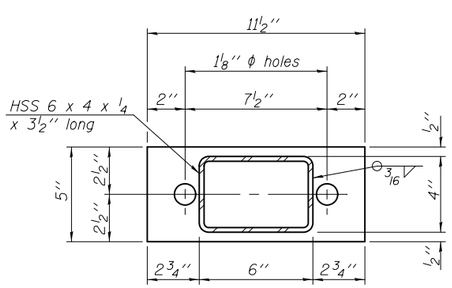

PL 1/2" x 11 1/2" x 5"

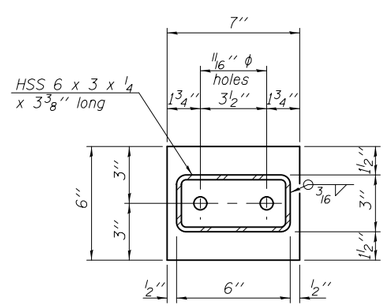

PL 1/2" x 7" x 6"

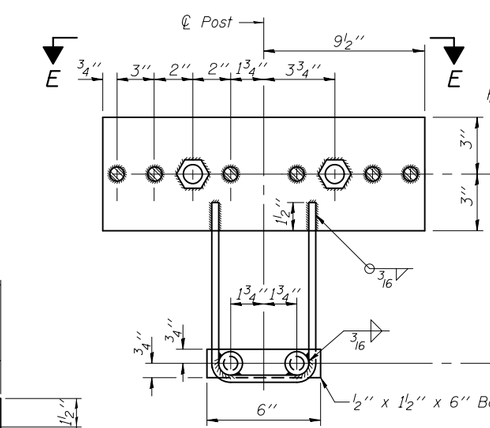

ANCHOR DEVICE

*Threaded areas shall be plugged or blocked off during casting of beam. Galvanized after fabrication.

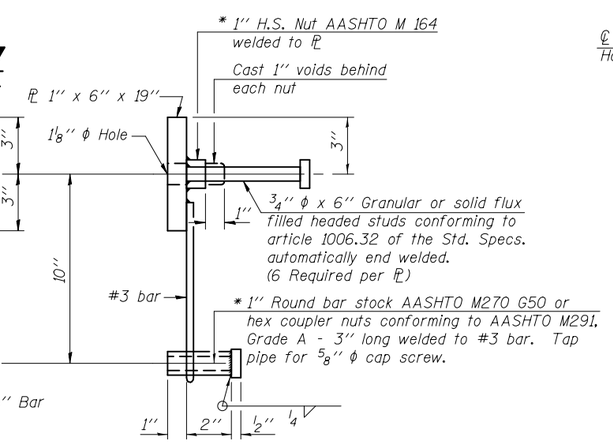

SPLICE DIMENSIONS

T	D	A	B	C	E
≤ 4"	2 1/2"	1'-8"	2"	4"	2 1/2"
> 4" ≤ 6 1/2"	3 3/4"	2'-0"	2 1/2"	5 1/2"	3 1/2"
> 6 1/2" ≤ 9"	5"	2'-4"	3 1/2"	6 1/2"	9"
> 9" ≤ 13"	7"	2'-10"	4 1/2"	8 1/2"	11"
Rail Splice	1/4"	1'-8"	2"	4"	——

T = Total movement at expansion joint as shown on the design plans.

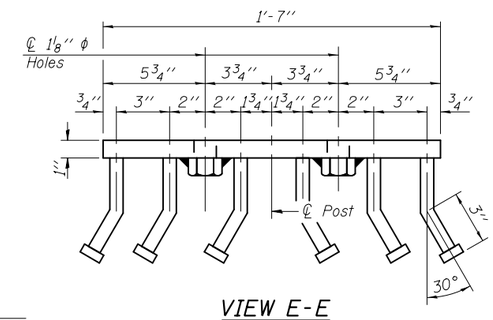

VIEW E-E

Notes:

For multi-span bridges, sufficient 1/4" x 6" x 1'-2" galvanized steel shims shall be provided to align rail between adjacent spans. Cost included with Steel Railing, Type SM.

All steel rail members shall be galvanized according to Article 509.05 of the Standard Specifications.

** The studs of the anchor devices shall be placed below the top reinforcement bars and the outermost longitudinal reinforcement bar shall be placed directly above the studs of the rail post anchor device. The anchorage studs may be bent down 1/2" to accommodate the top reinforcement bar placement.

BILL OF MATERIAL

Item	Unit	Quantity
Steel Railing, Type SM	Foot	

R-34HMAWS 11-22-2016 (6'-3" Maximum Post Spacing) (1 1/4" minimum to 3 1/8" maximum HMA thickness)

FILE NAME =	USER NAME =	DESIGNED -	REVISED -
		CHECKED -	REVISED -
	PLOT SCALE =	DRAWN -	REVISED -
	PLOT DATE =	CHECKED -	REVISED -

STATE OF ILLINOIS
DEPARTMENT OF TRANSPORTATION

STEEL RAILING, TYPE SM WITH HOT-MIX ASPHALT WEARING SURFACE
STRUCTURE NO.

F.A. RTE.	SECTION	COUNTY	TOTAL SHEETS	SHEET NO.

CONTRACT NO.

ILLINOIS FED. AID PROJECT

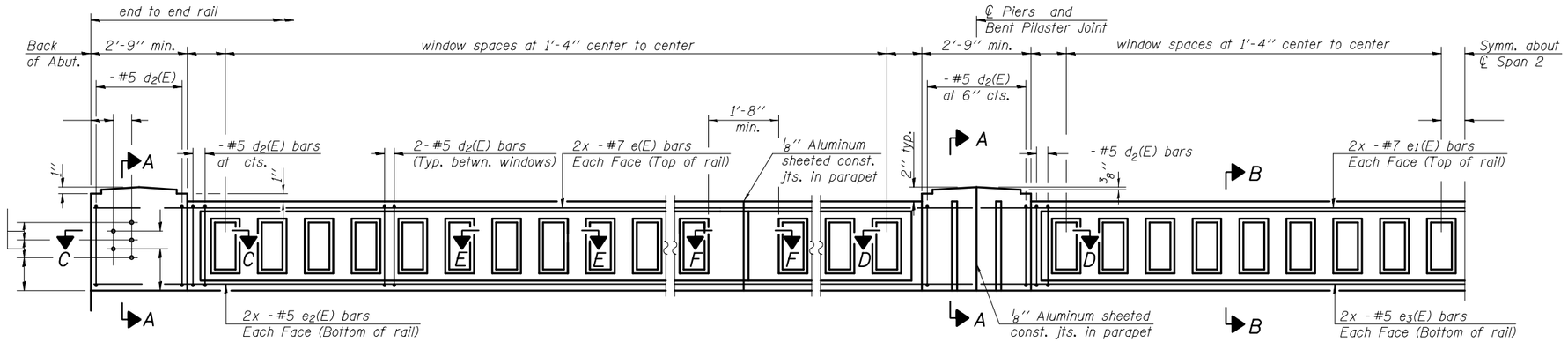

SPAN PILASTER PIER PILASTER

INSIDE ELEVATION OF RAIL

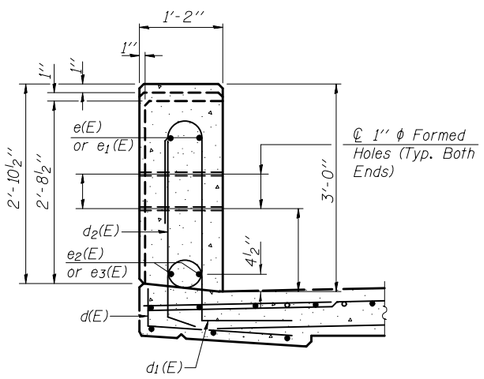

SECTION A-A

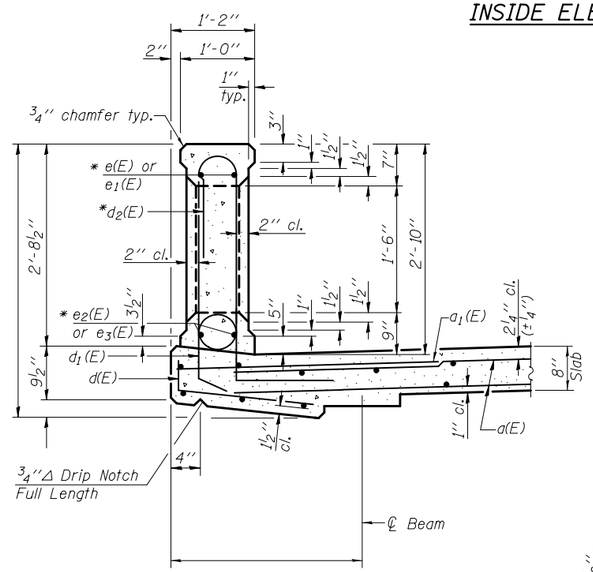

SECTION B-B

*Bars e(E) thru e3(E) and d2(E) are included in the cost of Concrete Bridge Railing.

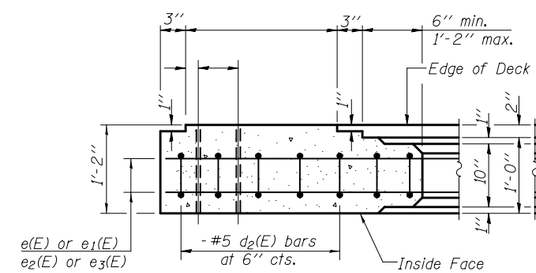

SECTION C-C

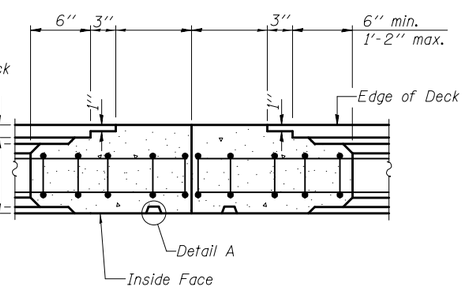

SECTION D-D

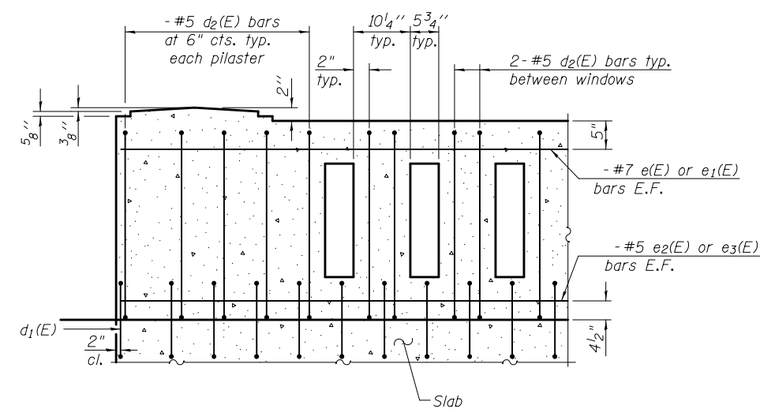

TYPICAL REINFORCEMENT PLACEMENT

(Inside Face)

The designer shall place additional joints in parapet (full height) as specified in Bridge Manual Figures 3.2.4-6 and 3.2.4-7.

BAR LIST

Bar	No.	Size	Length	Shape
d2(E)		#5	7'-4''	
e(E)		#7		
e1(E)		#7		
e2(E)		#5		
e3(E)		#5		

MIN. BAR LAP

#5 bars = 3'-1''
#7 bars = 5'-10''

Notes:

All concrete for railing wall shall be Class BS according to Article 1020.04 of the Standard Specifications. Surface of railing shall receive a rubbed finish according to Article 503.15(b) of the Standard Specifications.

All parts of the railing including concrete and reinforcing will be paid for at the contract unit price per foot for Concrete Bridge Railing.

Holes and recesses must be formed or cored. Drilling is not permitted.

Aluminum sheets shall be according to ASTM B209 alloy 3003-H14.

R-35 11-22-2016

(Sheet 1 of 2)

FILE NAME =	USER NAME =	DESIGNED -	REVISED -	STATE OF ILLINOIS DEPARTMENT OF TRANSPORTATION	CONCRETE BRIDGE RAILING STRUCTURE NO.	F.A. RTE.	SECTION	COUNTY	TOTAL SHEETS	SHEET NO.
		CHECKED -	REVISED -							
	PLOT SCALE =	DRAWN -	REVISED -					CONTRACT NO.		
	PLOT DATE =	CHECKED -	REVISED -				ILLINOIS	FED. AID PROJECT		

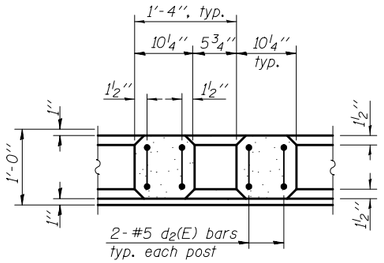

SECTION E-E

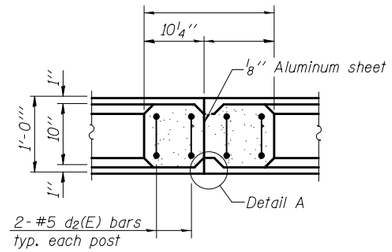

SECTION F-F
(For span greater than 50'-0")

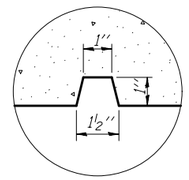

DETAIL A

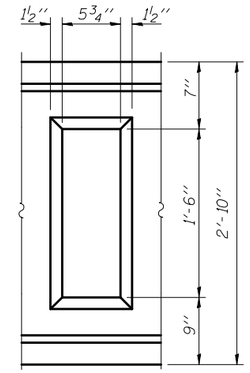

WINDOW DETAIL

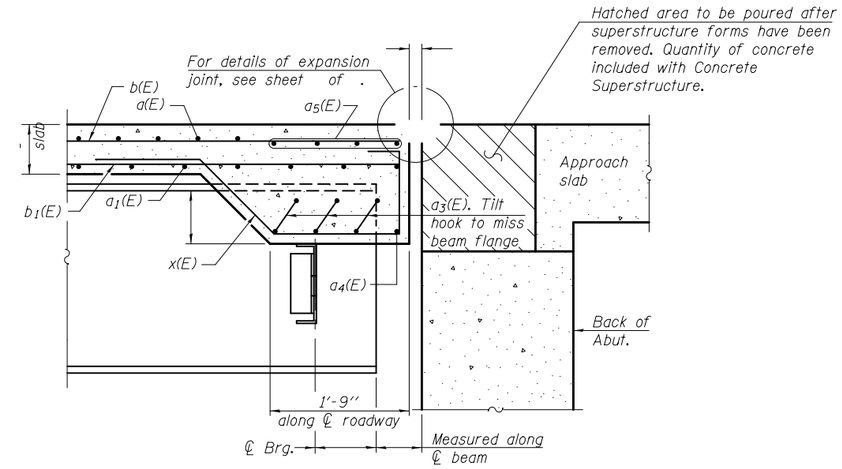

SECTION

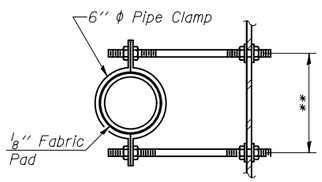

SECTION G-G
**Dimension as required by Pipe Clamp

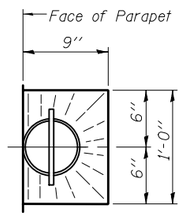

TOP PLAN

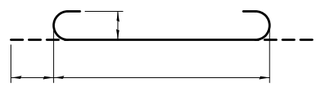

a3(E) BAR

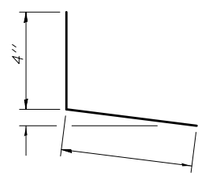

BAR d(E)

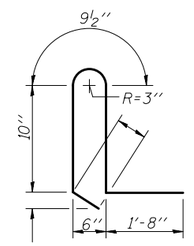

BAR d1(E)

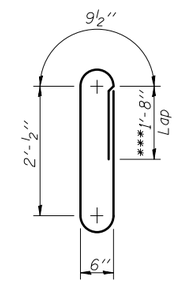

BAR d2(E)
*** Place lap on back side of railing.

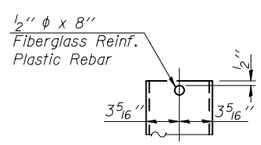

FIBERGLASS PIPE

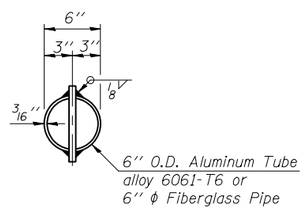

TOP PLAN
(Showing Aluminum Tube)

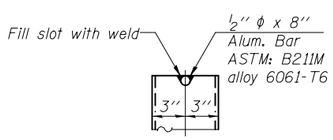

ALUMINUM TUBE

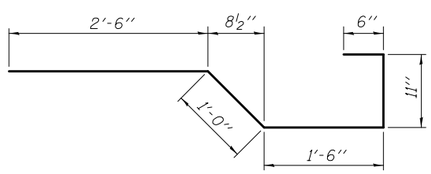

BAR x(E)

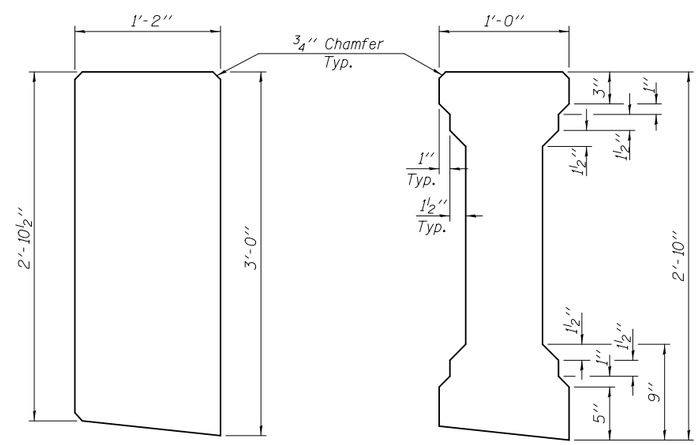

PIER PILASTER JOINT

SPAN PILASTER JOINT

ALUMINUM JOINT DETAILS

SUPERSTRUCTURE BILL OF MATERIAL

Bar	No.	Size	Length	Shape
d(E)				
a_1(E)				
a_2(E)		#6	6'-6"	
a_3(E)				
a_4(E)				
a_5(E)				
b(E)		#5		
b_1(E)		#6		
b_2(E)				
d(E)		#5		
d_1(E)		#5	4'-7½"	
x(E)			6'-5"	
Reinforcement Bars, Epoxy Coated			Pound	
Concrete Superstructure			Cu. Yds.	
Concrete Bridge Railing			Foot	

Bars indicated thus 1 x 15-#5 etc. indicates 1 line of bars with 15 lengths per line.

R-35 11-22-2016

(Sheet 2 of 2)

FILE NAME =	USER NAME =	DESIGNED -	REVISED -	STATE OF ILLINOIS DEPARTMENT OF TRANSPORTATION	CONCRETE BRIDGE RAILING STRUCTURE NO.	F.A. RTE.	SECTION	COUNTY	TOTAL SHEETS	SHEET NO.
		CHECKED -	REVISED -							
	PLOT SCALE =	DRAWN -	REVISED -			CONTRACT NO.				
	PLOT DATE =	CHECKED -	REVISED -			ILLINOIS FED. AID PROJECT				

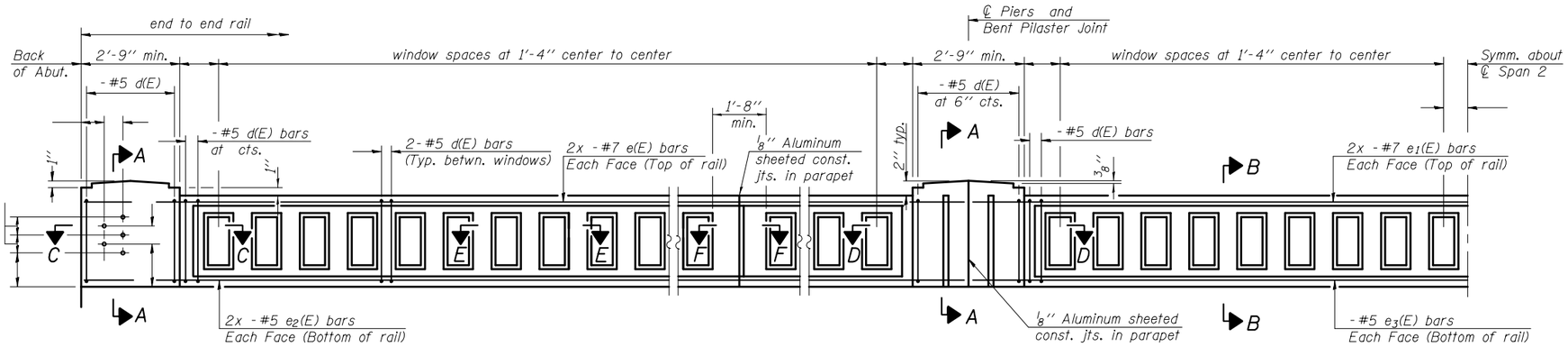

INSIDE ELEVATION OF RAIL

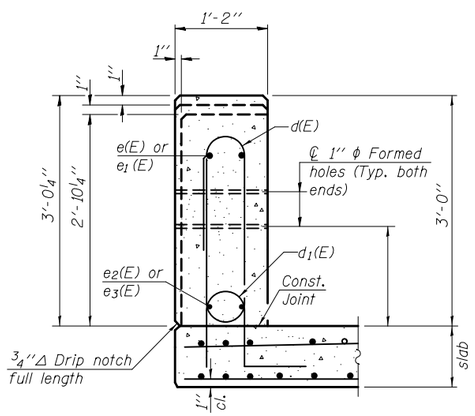

SECTION A-A
THRU POST ON SLAB BRIDGE

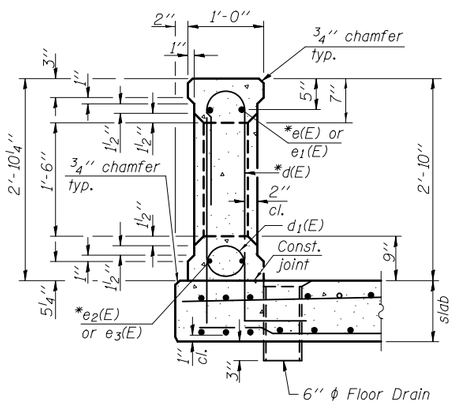

SECTION B-B
THRU WINDOW ON SLAB BRIDGE

*Bars e(E) thru e3(E) and d(E) are included in the cost of Concrete Bridge Railing.

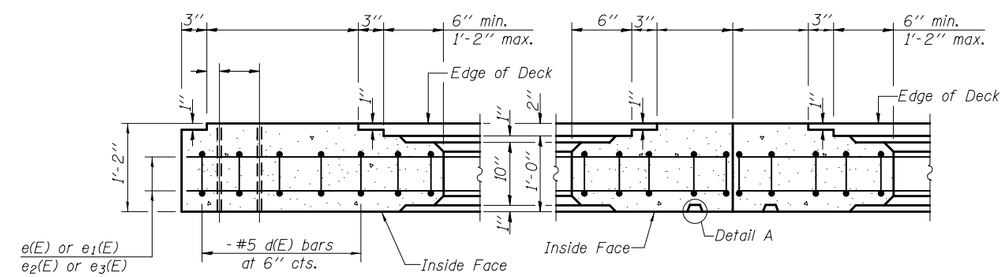

SECTION C-C

SECTION D-D

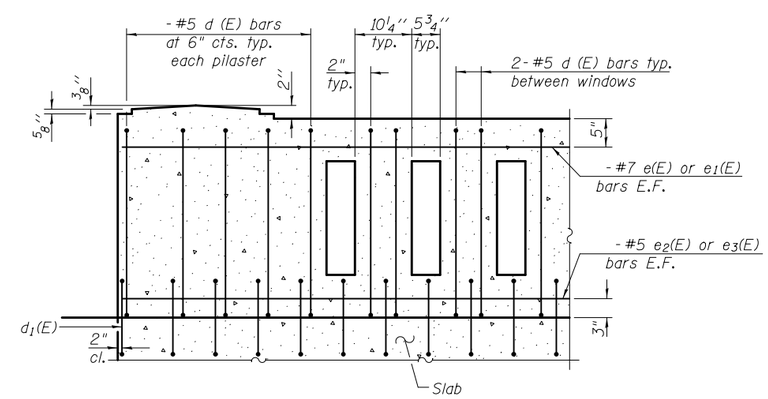

TYPICAL REINFORCEMENT PLACEMENT

(Inside Face)

The designer shall place additional joints in parapet (full height) as specified in Bridge Manual Figures 3.2.4-6 and 3.2.4-7.

BAR LIST

Bar	No.	Size	Length	Shape
d(E)		#5	7'-7''	
e(E)		#7		
e1(E)		#7		
e2(E)		#5		
e3(E)		#5		

MIN. BAR LAP

#5 bars = 3'-1''
#7 bars = 5'-10''

Notes:

All concrete for railing wall shall be Class BS according to Article 1020.04 of the Standard Specifications. Surface of railing shall receive a rubbed finish according to Article 503.15(b) of the Standard Specifications.

All parts of the railing including concrete and reinforcing will be paid for at the contract unit price per foot for Concrete Bridge Railing.

Holes and recesses must be formed or cored. Drilling is not permitted.

Aluminum sheets shall be according to ASTM B209 alloy 3003-H14.

R-36 11-22-2016

(Sheet 1 of 2)

FILE NAME =	USER NAME =	DESIGNED -	REVISED -	STATE OF ILLINOIS DEPARTMENT OF TRANSPORTATION	CONCRETE BRIDGE RAILING STRUCTURE NO.	F.A. RTE.	SECTION	COUNTY	TOTAL SHEETS	SHEET NO.
		CHECKED -	REVISED -							
	PLOT SCALE =	DRAWN -	REVISED -					CONTRACT NO.		
	PLOT DATE =	CHECKED -	REVISED -				ILLINOIS	FED. AID PROJECT		

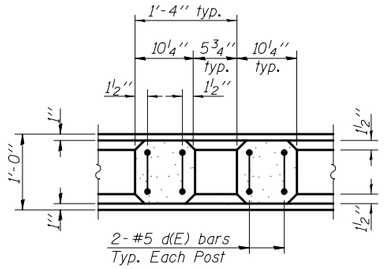

SECTION E-E

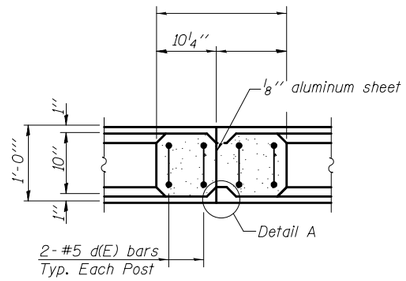

SECTION F-F
(For span greater than 50'-0'')

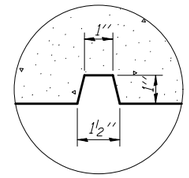

DETAIL A

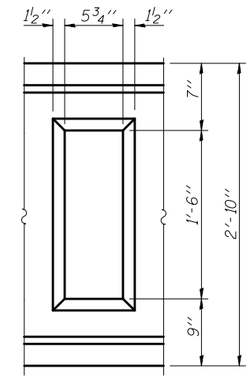

WINDOW DETAIL

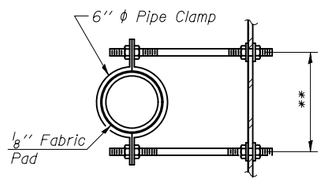

SECTION G-G
**Dimension as required
by Pipe Clamp

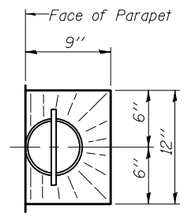

TOP PLAN

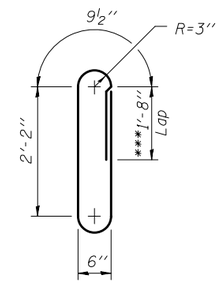

BAR d(E)
*** Place lap on back side
of railing.

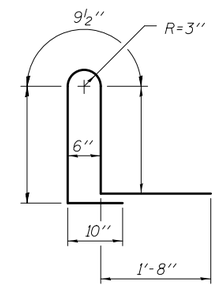

BAR $d_1(E)$

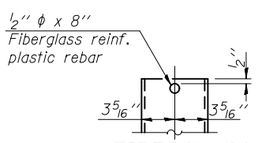

FIBERGLASS
PIPE

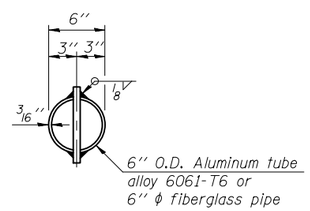

TOP PLAN
(Showing aluminum tube)

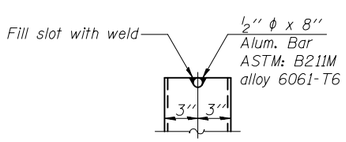

ALUMINUM
TUBE

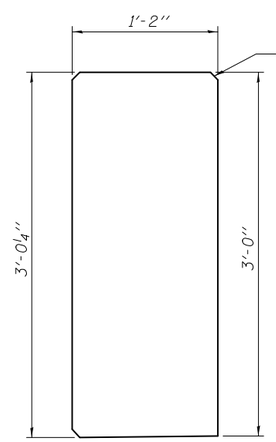

PIER PILASTER JOINT

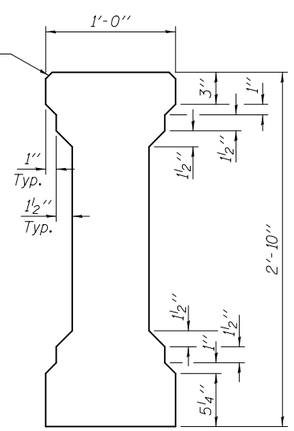

SPAN PILASTER JOINT

ALUMINUM JOINT DETAILS

SUPERSTRUCTURE BILL OF MATERIAL

Bar	No.	Size	Length	Shape
d(E)				———
$d_1(E)$				———
$d_2(E)$		#6	6'-6''	———
b(E)		#5		———
$b_1(E)$		#6		———
$b_2(E)$				———
$d_1(E)$		#5		⅃
Reinforcement Bars, Epoxy Coated			Pound	
Concrete Superstructure			Cu. Yds.	
Concrete Bridge Railing			Foot	

Bars indicated thus 1 x 15-#5 etc. indicates
1 line of bars with 15 lengths per line.

R-36 11-22-2016

(Sheet 2 of 2)

FILE NAME =	USER NAME =	DESIGNED -	REVISED -	STATE OF ILLINOIS DEPARTMENT OF TRANSPORTATION	CONCRETE BRIDGE RAILING STRUCTURE NO.	F.A. RTE.	SECTION	COUNTY	TOTAL SHEETS	SHEET NO.
		CHECKED -	REVISED -							
	PLOT SCALE =	DRAWN -	REVISED -					CONTRACT NO.		
	PLOT DATE =	CHECKED -	REVISED -				ILLINOIS FED. AID PROJECT			

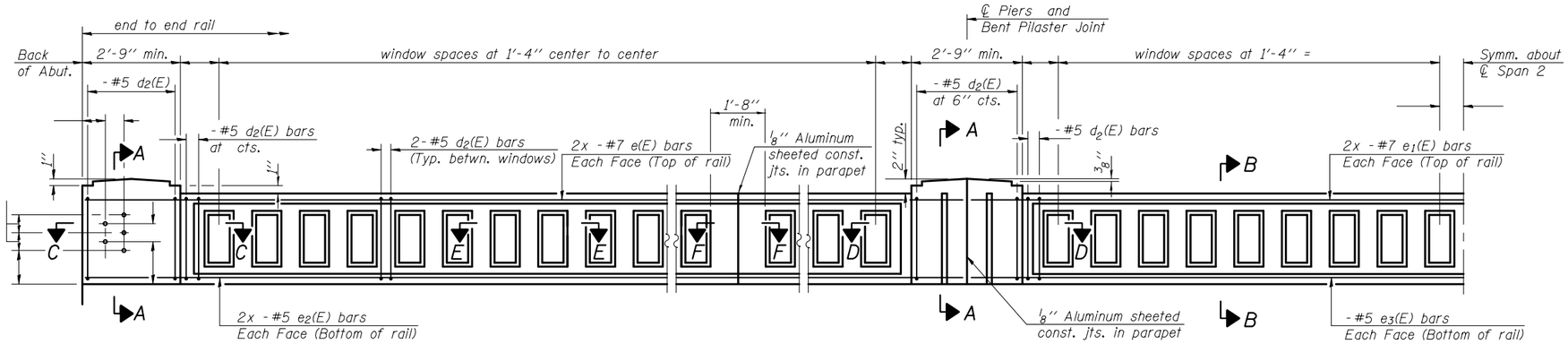

SPAN PILASTER PIER PILASTER

INSIDE ELEVATION OF RAIL

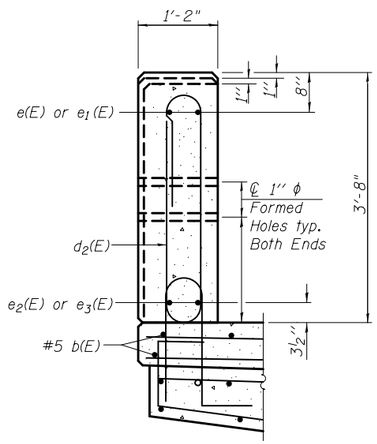

SECTION A-A

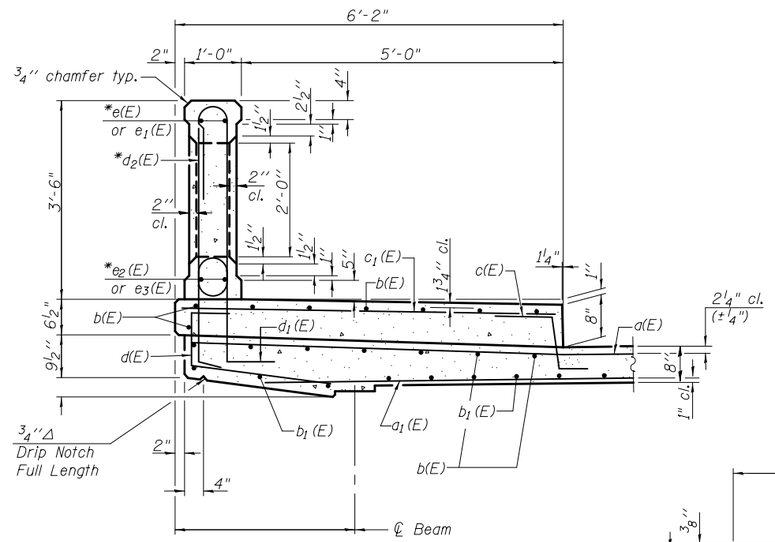

SECTION B-B

*Bars e(E) thru e3(E) and d2(E) are included in the cost of Concrete Bridge Railing, Sidewalk Mounted.

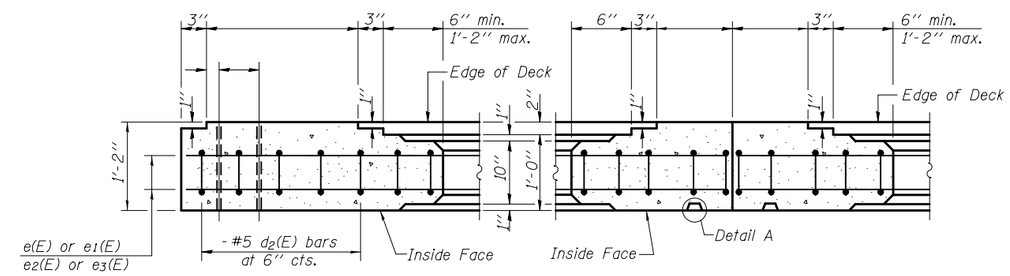

SECTION C-C

SECTION D-D

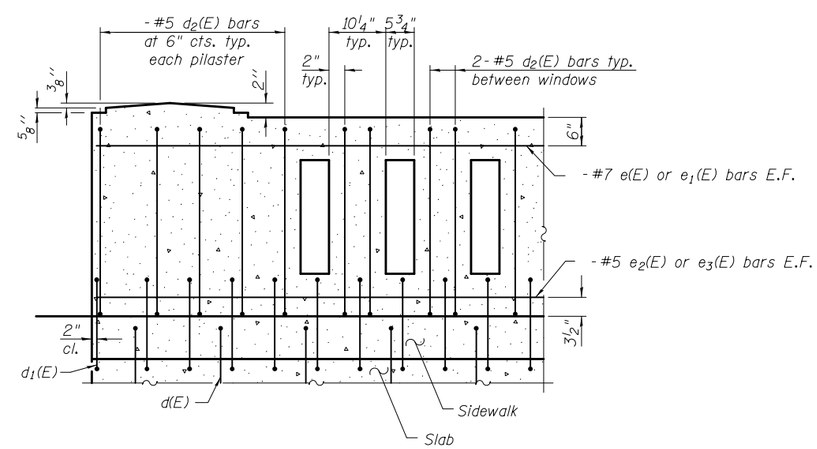

TYPICAL REINFORCEMENT PLACEMENT

(Inside Face)

The designer shall place additional joints in parapet (full height) as specified in Bridge Manual Figures 3.2.4-6 and 3.2.4-7.

MIN. BAR LAP

#5 bars = 3'-1"

#7 bars = 5'-10"

BAR LIST

Bar	No.	Size	Length	Shape
$d_2(E)$		#5	8'-8"	
$e(E)$		#7		
$e_1(E)$		#7		
$e_2(E)$		#5		
$e_3(E)$		#5		

Notes:

All concrete for railing wall shall be Class BS according to Article 1020.04 of the Standard Specifications. Surface of railing shall receive a rubbed finish according to Article 503.15(b) of the Standard Specifications.

All parts of the railing including concrete and reinforcing will be paid for at the contract unit price per foot for Concrete Bridge Railing, Sidewalk Mounted.

Holes and recesses must be formed or cored. Drilling is not permitted.

Aluminum sheets shall be according to ASTM B209 alloy 3003-H14.

R-37 11-22-2016

(Sheet 1 of 2)

FILE NAME =	USER NAME =	DESIGNED -	REVISED -	STATE OF ILLINOIS DEPARTMENT OF TRANSPORTATION	CONCRETE BRIDGE RAILING, SIDEWALK MOUNTED STRUCTURE NO.	F.A. RTE.	SECTION	COUNTY	TOTAL SHEETS	SHEET NO.
		CHECKED -	REVISED -							
	PLOT SCALE =	DRAWN -	REVISED -					CONTRACT NO.		
	PLOT DATE =	CHECKED -	REVISED -				ILLINOIS	FED. AID PROJECT		

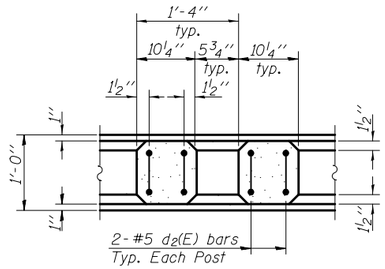

SECTION E-E

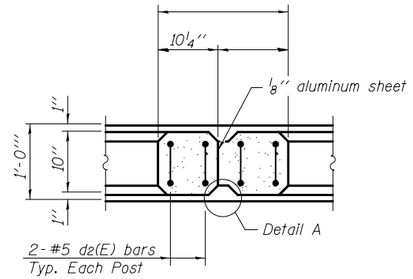

SECTION F-F
(For span greater than 50'-0'')

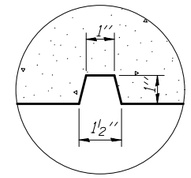

DETAIL A

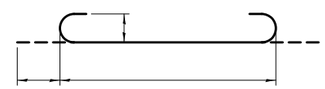

a3(E) BAR

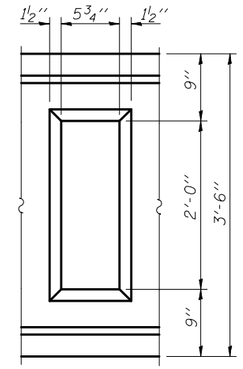

WINDOW DETAIL

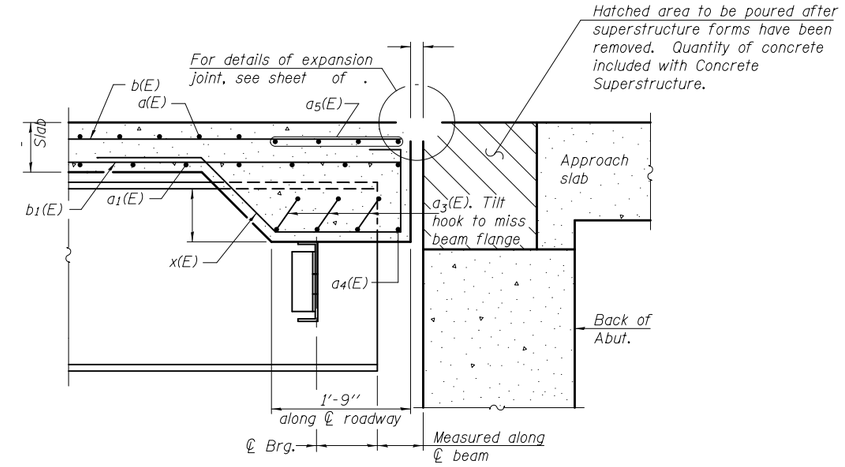

SECTION

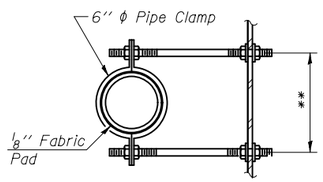

SECTION G-G
**Dimension as required by Pipe Clamp

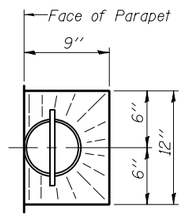

TOP PLAN

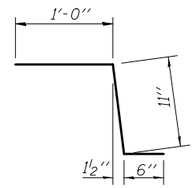

BAR c(E)

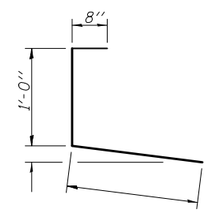

BAR d(E)

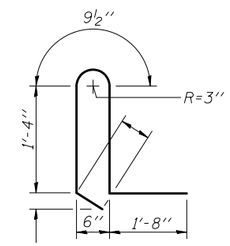

BAR d1(E)

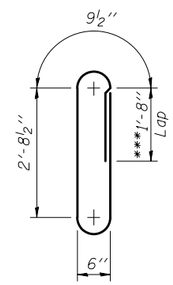

BAR d2(E)
*** Place lap on back side of railing.

SUPERSTRUCTURE BILL OF MATERIAL

Bar	No.	Size	Length	Shape
a(E)				
a1(E)				
a2(E)		#6	6'-6''	
a3(E)				
a4(E)				
a5(E)				
b(E)		#5		
b1(E)		#6		
b2(E)				
c(E)		#5	2'-5''	
c1(E)		#5	5'-8''	
d(E)		#5		
d1(E)		#5	5'-7½''	
x(E)			6'-5''	
Reinforcement Bars, Epoxy Coated			Pound	
Concrete Superstructure			Cu. Yds.	
Concrete Bridge Railing, Sidewalk Mounted			Foot	

Bars indicated thus 1 x 15-#5 etc. indicates 1 line of bars with 15 lengths per line.

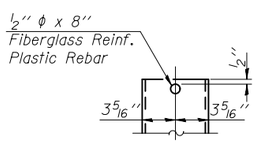

FIBERGLASS PIPE

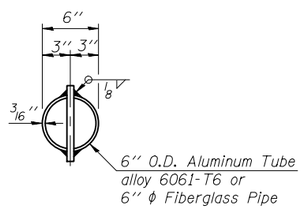

TOP PLAN
(Showing Aluminum Tube)

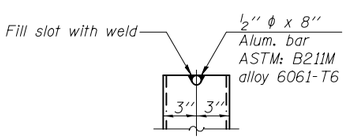

ALUMINUM TUBE

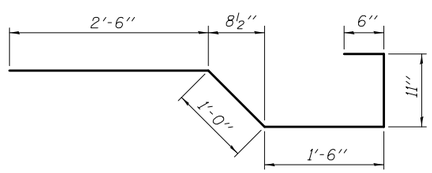

BAR x(E)

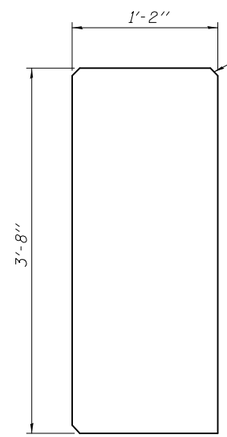

PIER PILASTER JOINT

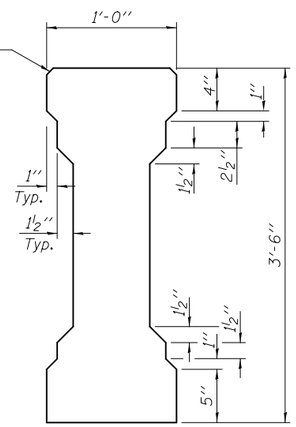

SPAN PILASTER JOINT

ALUMINUM JOINT DETAILS

R-37 11-22-2016

(Sheet 2 of 2)

FILE NAME =	USER NAME =	DESIGNED -	REVISED -	STATE OF ILLINOIS DEPARTMENT OF TRANSPORTATION	CONCRETE BRIDGE RAILING, SIDEWALK MOUNTED STRUCTURE NO.	F.A. RTE.	SECTION	COUNTY	TOTAL SHEETS	SHEET NO.
		CHECKED -	REVISED -							
	PLOT SCALE =	DRAWN -	REVISED -					CONTRACT NO.		
	PLOT DATE =	CHECKED -	REVISED -				ILLINOIS	FED. AID PROJECT		

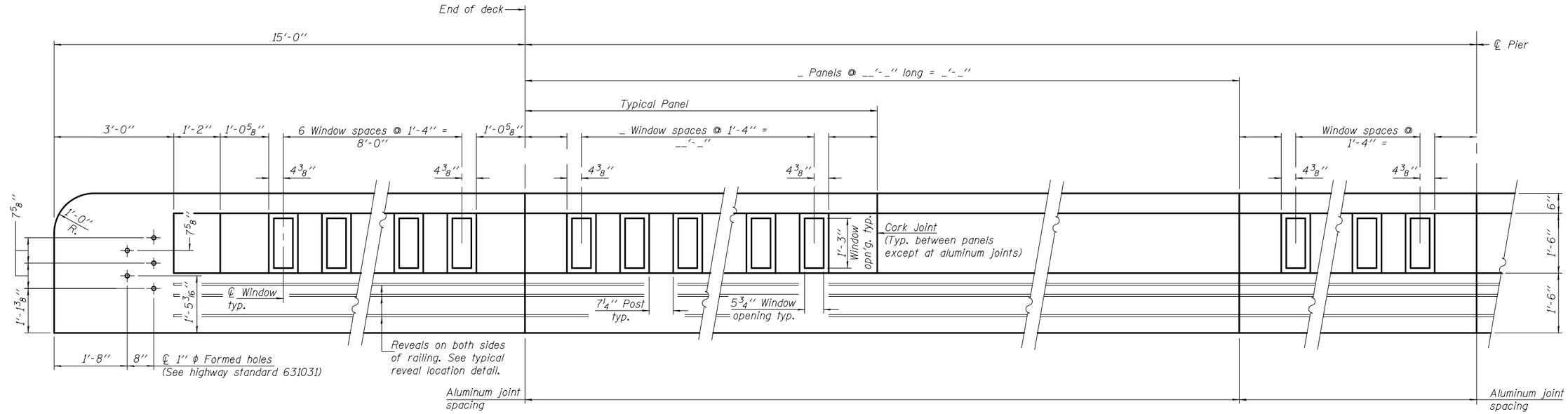

INSIDE ELEVATION OF RAILING

(Showing Dimensions)

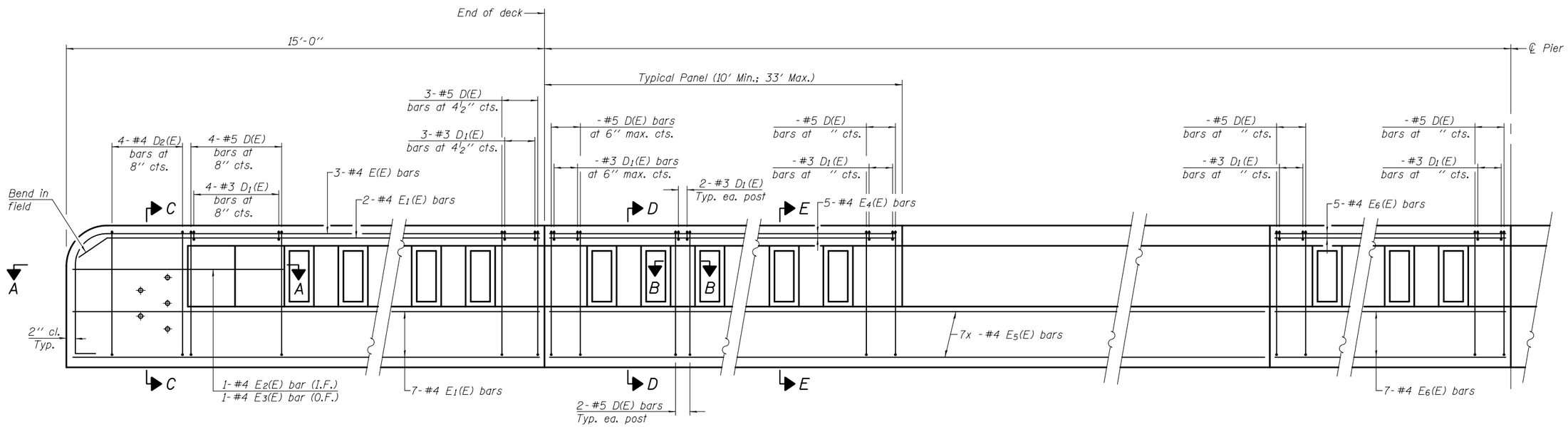

INSIDE ELEVATION OF RAILING

(Showing Reinforcement)

MINIMUM BAR LAP

#4 bar = 2'-8"

Notes: Adjust reinforcement spacings as required to miss 1" ϕ formed holes.
Bars indicated thus 7 x _-#4 etc. indicates 7 line of bars with _ lengths per line.
The average weight of railing is 560 plf.

R-38

11-22-2016

(Sheet 1 of 2)

FILE NAME =	USER NAME =	DESIGNED -	REVISED -	STATE OF ILLINOIS DEPARTMENT OF TRANSPORTATION	CONCRETE BRIDGE RAILING, TL-4 STRUCTURE NO.	F.A. RTE.	SECTION	COUNTY	TOTAL SHEETS / SHEET NO.
		CHECKED -	REVISED -						
	PLOT SCALE =	DRAWN -	REVISED -			CONTRACT NO.			
	PLOT DATE =	CHECKED -	REVISED -			ILLINOIS	FED. AID PROJECT		

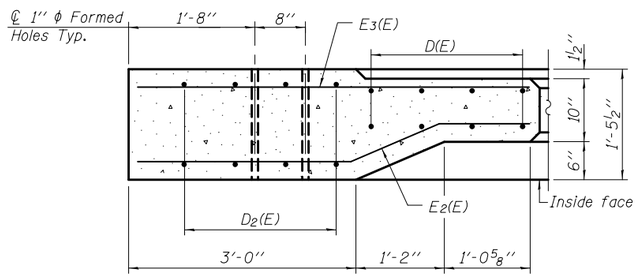

SECTION A-A

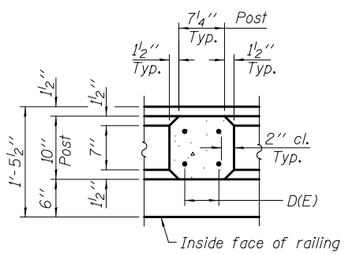

SECTION B-B

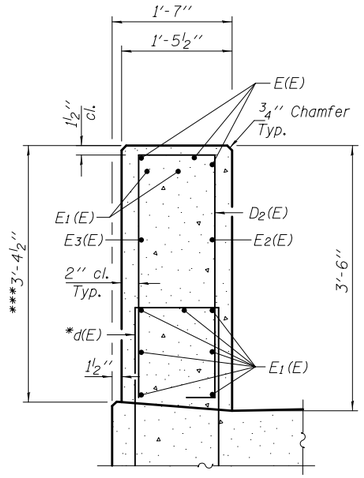

SECTION C-C

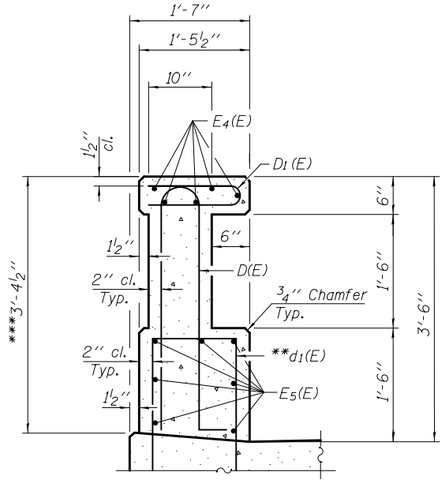

SECTION D-D

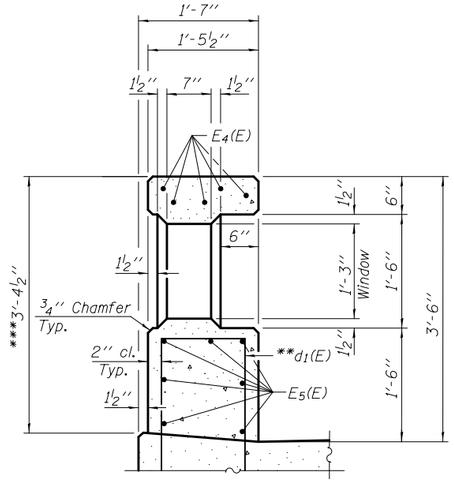

SECTION E-E

* d(E) bars included in Approach Bill of Material.
** d1(E) bars included in Superstructure Bill of Material.
*** 3'-6'' when placed on sidewalk.

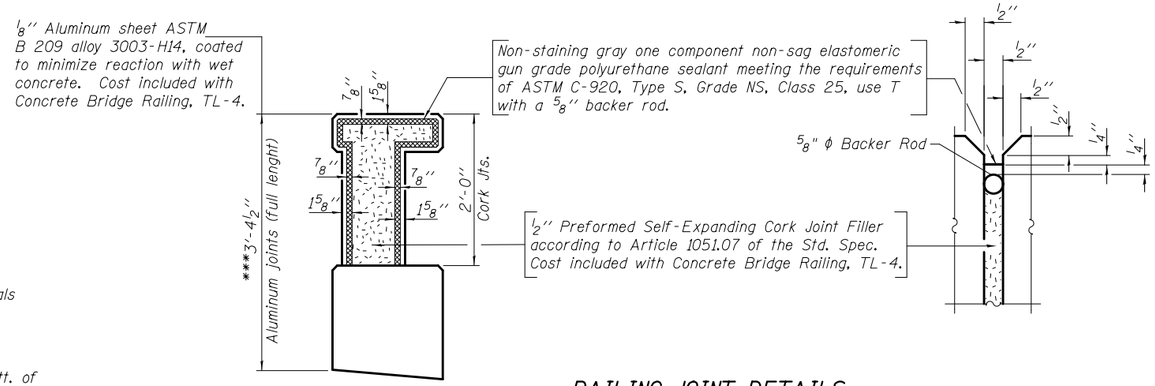

RAILING JOINT DETAILS

Notes:

All concrete for railing wall shall be Class BS according to Art. 1020.04 of the Standard Specifications. Surface of railing shall receive a rubbed finish according to Art. 503.15(b) of the Standard Specifications.

All parts of the railing including concrete and reinforcing will be paid for at the contract unit price per foot for Concrete Bridge Railing, TL-4.

Holes and recesses must be formed or cored. Drilling is not permitted.

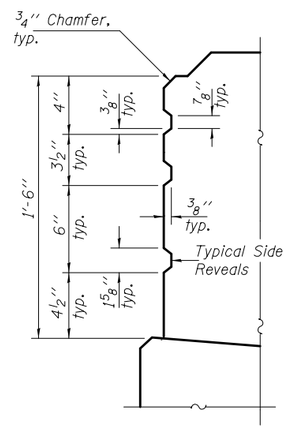

SIDE REVEAL DETAIL

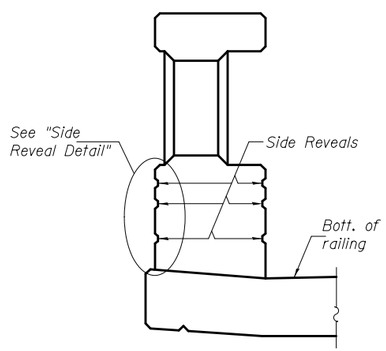

TYPICAL REVEAL LOCATION DETAIL

TWO RAILINGS
BAR LIST
(For information only)

Bar	No.	Size	Length	Shape
D(E)		#5	7'-2''	
D1(E)		#3	2'-6''	
D2(E)	16	#4	7'-10''	
E(E)	12	#4	17'-10''	
E1(E)	36	#4	14'-8''	
E2(E)	4	#4	5'-1''	
E3(E)	4	#4	5'-0''	
E4(E)		#4		
E5(E)		#4		
E6(E)		#4		

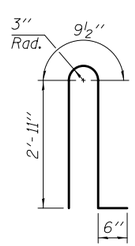

BAR D(E)

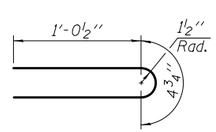

BAR D1(E)

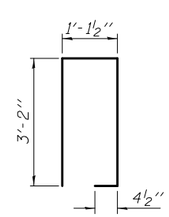

BARS D2(E)

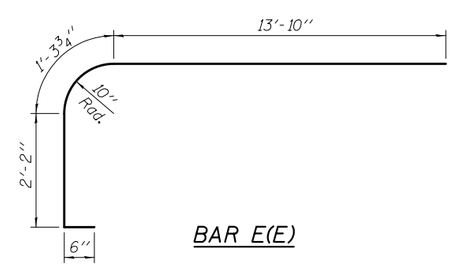

BAR E(E)

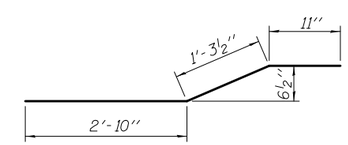

BAR E2(E)

BILL OF MATERIAL

Item	Unit	Quantity
Concrete Bridge Railing, TL-4	Foot	

R-38 11-22-2016

(Sheet 2 of 2)

FILE NAME =	USER NAME =	DESIGNED -	REVISED -	STATE OF ILLINOIS DEPARTMENT OF TRANSPORTATION	CONCRETE BRIDGE RAILING, TL-4 STRUCTURE NO.	F.A. RTE.	SECTION	COUNTY	TOTAL SHEETS	SHEET NO.
		CHECKED -	REVISED -							
	PLOT SCALE =	DRAWN -	REVISED -					CONTRACT NO.		
	PLOT DATE =	CHECKED -	REVISED -				ILLINOIS FED. AID PROJECT			

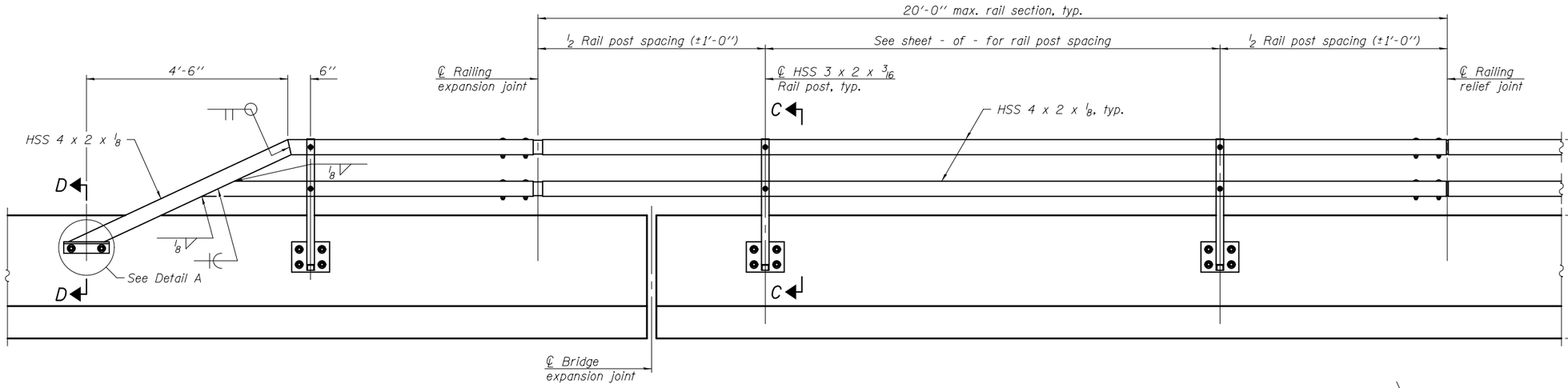

OUTSIDE ELEVATION OF PARAPET

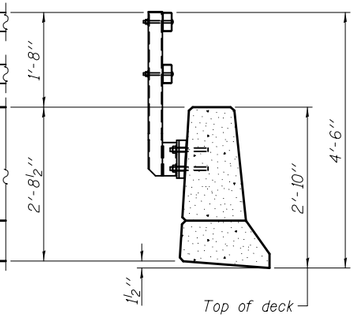

SECTION THRU PARAPET

(Taper backed parapet shown, straight backed parapet similar)

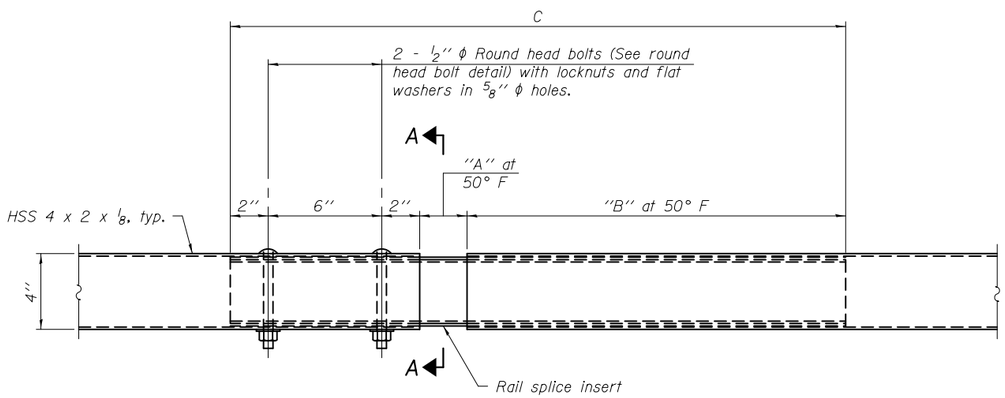

RAIL SPLICE ELEVATION

(At railing expansion joint)

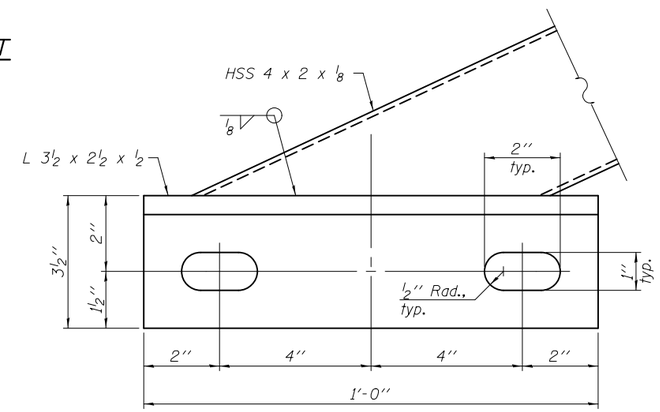

DETAIL A

(Bolts omitted for clarity)

SPLICE DIMENSIONS

*T	A	B	C
≤4"	2½"	1'-8"	2'-8½"
≤6½"	3¾"	1'-9¼"	2'-11"
≤9"	5"	1'-10½"	3'-1½"
≤13"	7"	2'-0½"	3'-5½"

*T = Total movement at expansion joint (as shown on the design plans)

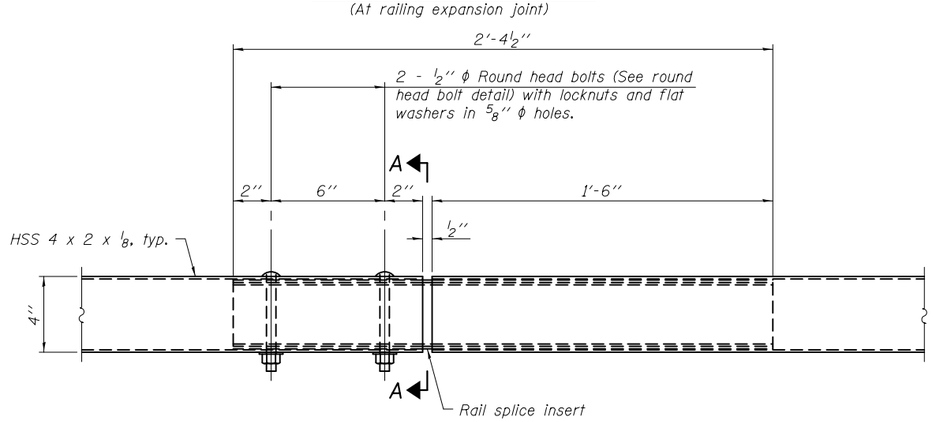

RAIL SPLICE ELEVATION

(At railing relief joint)

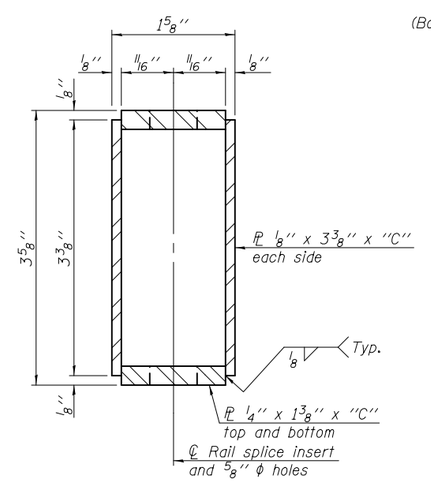

SECTION A-A

Notes:

This work shall be according to Section 509 of the Standard Specifications except as noted.

Rail posts shall not be located closer than 1'-3" to an existing bridge expansion joint or end of bridge.

Railing expansion joints shall be provided between any two (2) posts which span a bridge expansion joint.

Railing relief joints shall be placed between rail sections that do not span over an expansion joint.

All structural steel tubing, post and railing shall be CVN tested according to 1006.34(b).

Threaded rods shall be ASTM F1554, Grade 36 (or an Engineer-approved alternate material) of the grade(s) and diameter(s) specified. The corresponding specified grade of AASHTO M314 may be used in lieu of ASTM F1554.

All structural steel plates shall be AASHTO M270, Grade 36.

This work will be paid for at the contract unit price per foot for BICYCLE RAILING (PARAPET MOUNTED).

BILL OF MATERIAL

Item	Unit	Quantity
Bicycle Railing (Parapet Mounted)	Foot	-

R-39

11-22-2016 (7'-0" to 10'-0" Post Spacing)

(Sheet 1 of 2)

FILE NAME =	USER NAME =	DESIGNED -	REVISED -	STATE OF ILLINOIS DEPARTMENT OF TRANSPORTATION	BICYCLE RAILING (PARAPET MOUNTED) STRUCTURE NO.	F.A. RTE.	SECTION	COUNTY	TOTAL SHEETS	SHEET NO.
		CHECKED -	REVISED -							
	PLOT SCALE =	DRAWN -	REVISED -					CONTRACT NO.		
	PLOT DATE =	CHECKED -	REVISED -				ILLINOIS	FED. AID PROJECT		

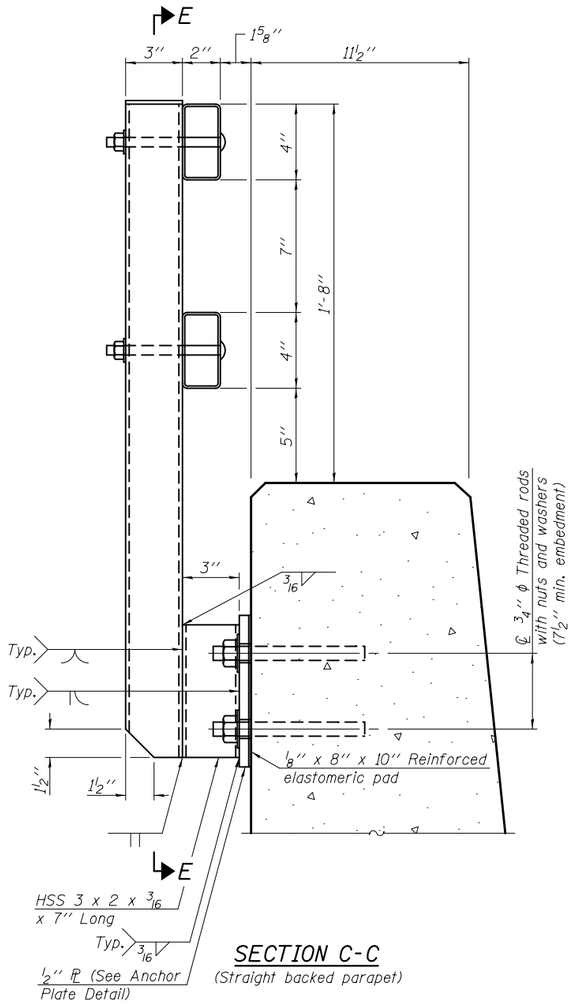

SECTION C-C
(Straight backed parapet)

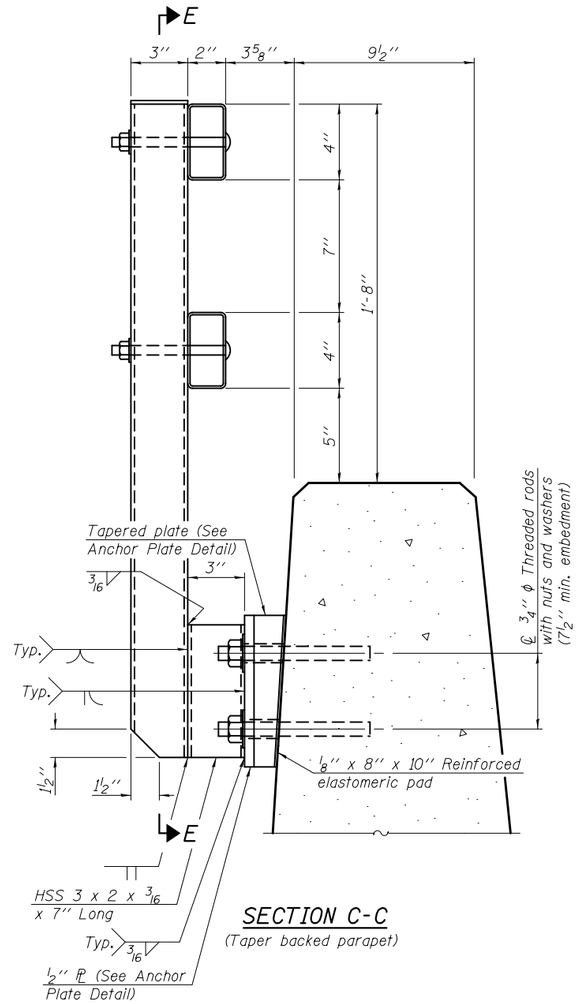

SECTION C-C
(Taper backed parapet)

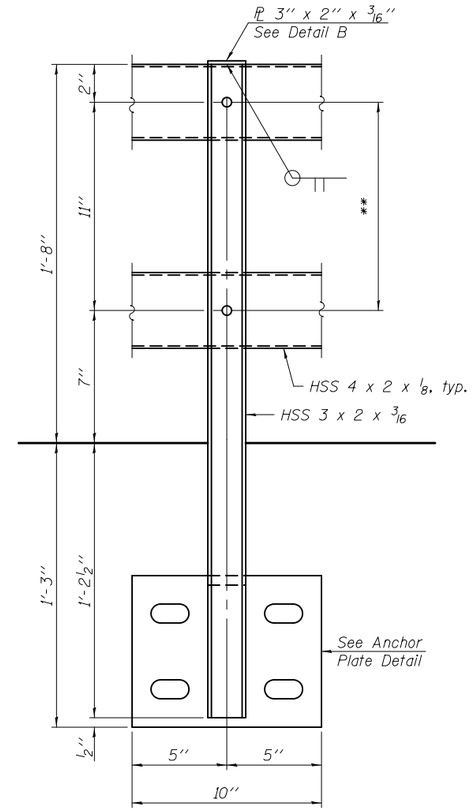

SECTION E-E
(Bolts omitted for clarity)

** ℄ 1/2'' ϕ Round head bolts with locknut and flat washer. 5/8'' ϕ holes in hollow structural section may be drilled in the field.

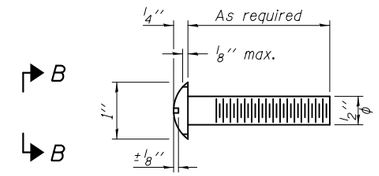

ROUND HEAD BOLT DETAIL

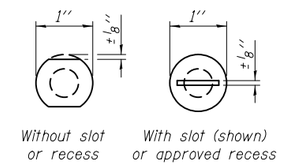

VIEW B-B

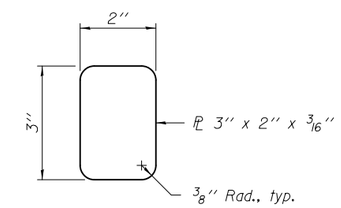

DETAIL B

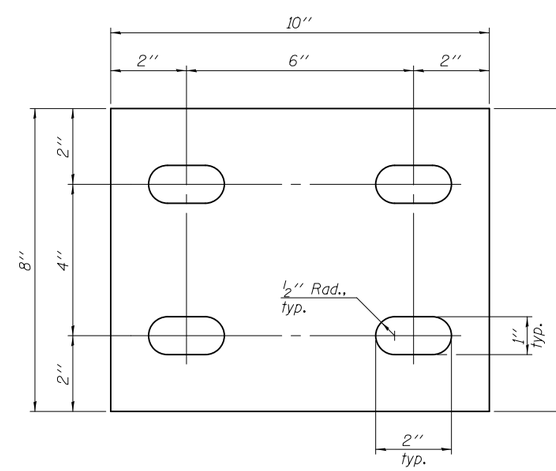

ANCHOR PLATE DETAIL
(For 1/2'' PL and tapered PL)

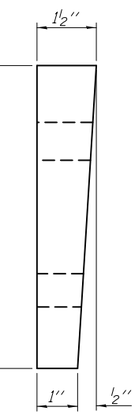

SECTION THRU TAPERED PLATE

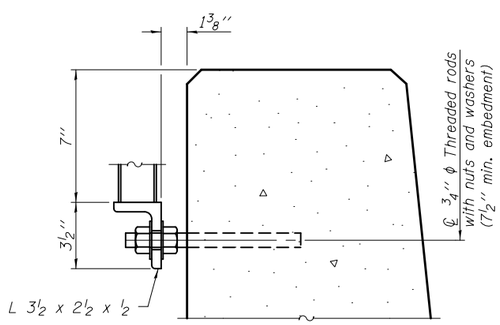

SECTION D-D
(Straight backed parapet)

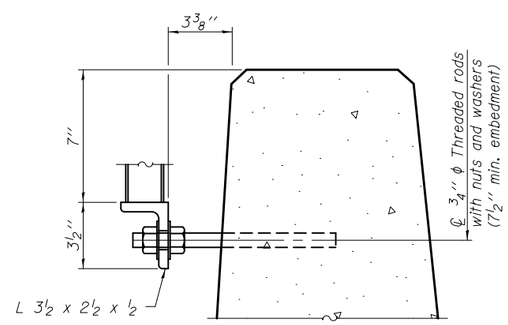

SECTION D-D
(Taper backed parapet)

R-39

11-22-2016

(Sheet 2 of 2)

FILE NAME =	USER NAME =	DESIGNED -	REVISED -
		CHECKED -	REVISED -
	PLOT SCALE =	DRAWN -	REVISED -
	PLOT DATE =	CHECKED -	REVISED -

STATE OF ILLINOIS
DEPARTMENT OF TRANSPORTATION

BICYCLE RAILING (PARAPET MOUNTED)
STRUCTURE NO.

F.A. RTE.	SECTION	COUNTY	TOTAL SHEETS	SHEET NO.
		CONTRACT NO.		
	ILLINOIS	FED. AID PROJECT		