CELL / MODEL NAME	DESCRIPTION	DATE
SSB-H-L	Plan and Elevation ahead left with horizontal cantilever wingwalls	07/01/2010
SSB-H-O	Plan and Elevation no skew with horizontal cantilever wingwalls	07/01/2010
SSB-H-R	Plan and Elevation ahead right with horizontal cantilever wingwalls	07/01/2010
SSB-L-L	Plan and Elevation ahead left with L type wingwalls	07/01/2010
SSB-L-O	Plan and Elevation no skew with L type wingwalls	07/01/2010
SSB-L-R	Plan and Elevation ahead right with L type wingwalls	07/01/2010
SSB-T1-L	Plan and Elevation ahead left with T type wingwalls (H<8 ft)	07/01/2010
SSB-T1-O	Plan and Elevation no skew with T type wingwalls (H<8 ft)	07/01/2010
SSB-T1-R	Plan and Elevation ahead right with T type wingwalls (H<8 ft)	07/01/2010
SSB-T2-L	Plan and Elevation ahead left with T type wingwalls (H>8 ft)	07/01/2010
SSB-T2-O	Plan and Elevation no skew with T type wingwalls (H>8 ft)	07/01/2010
SSB-T2-R	Plan and Elevation ahead right with T type wingwalls (H>8 ft)	07/01/2010

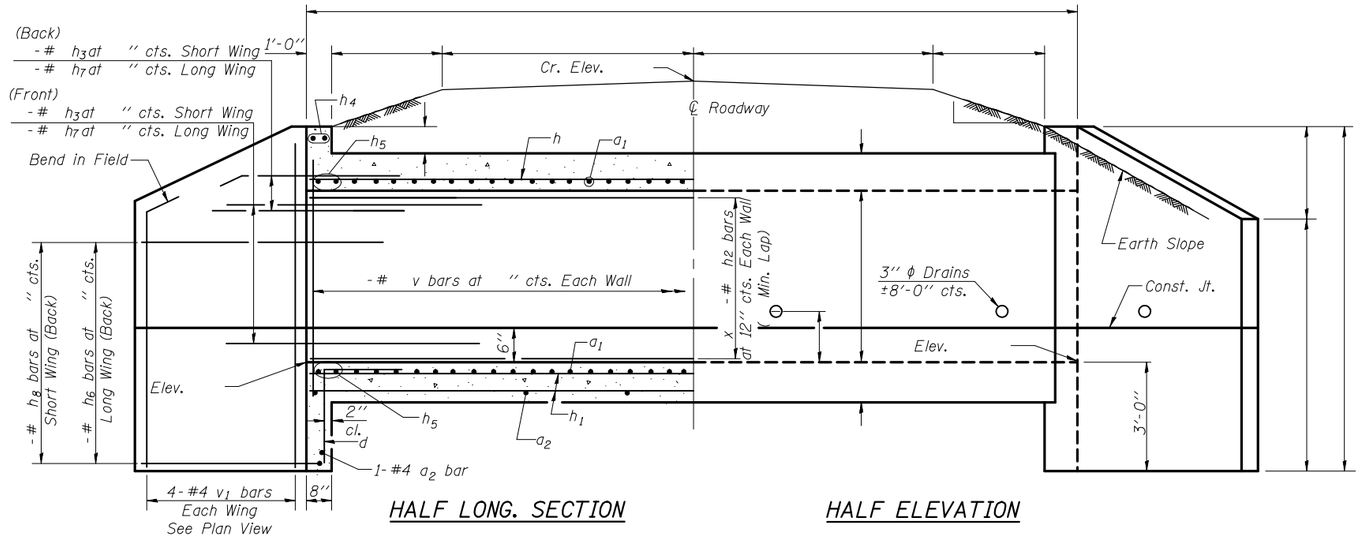

HALF LONG. SECTION

HALF ELEVATION

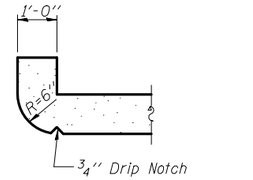

SECTION THRU HEADWALL

(Up Stream End Only)

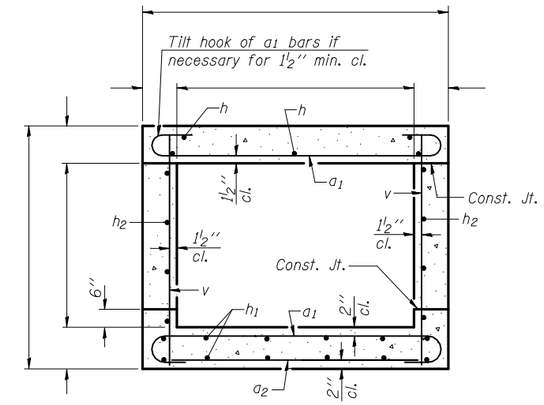

SECTION THRU BARREL

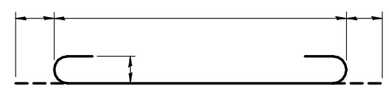

BAR a1

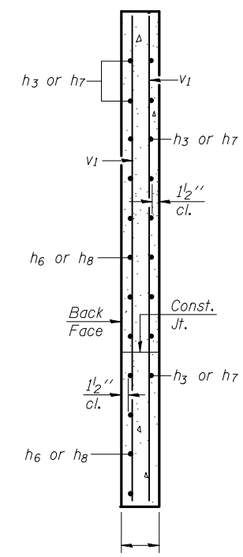

SECTION A-A

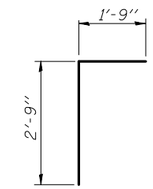

BAR d

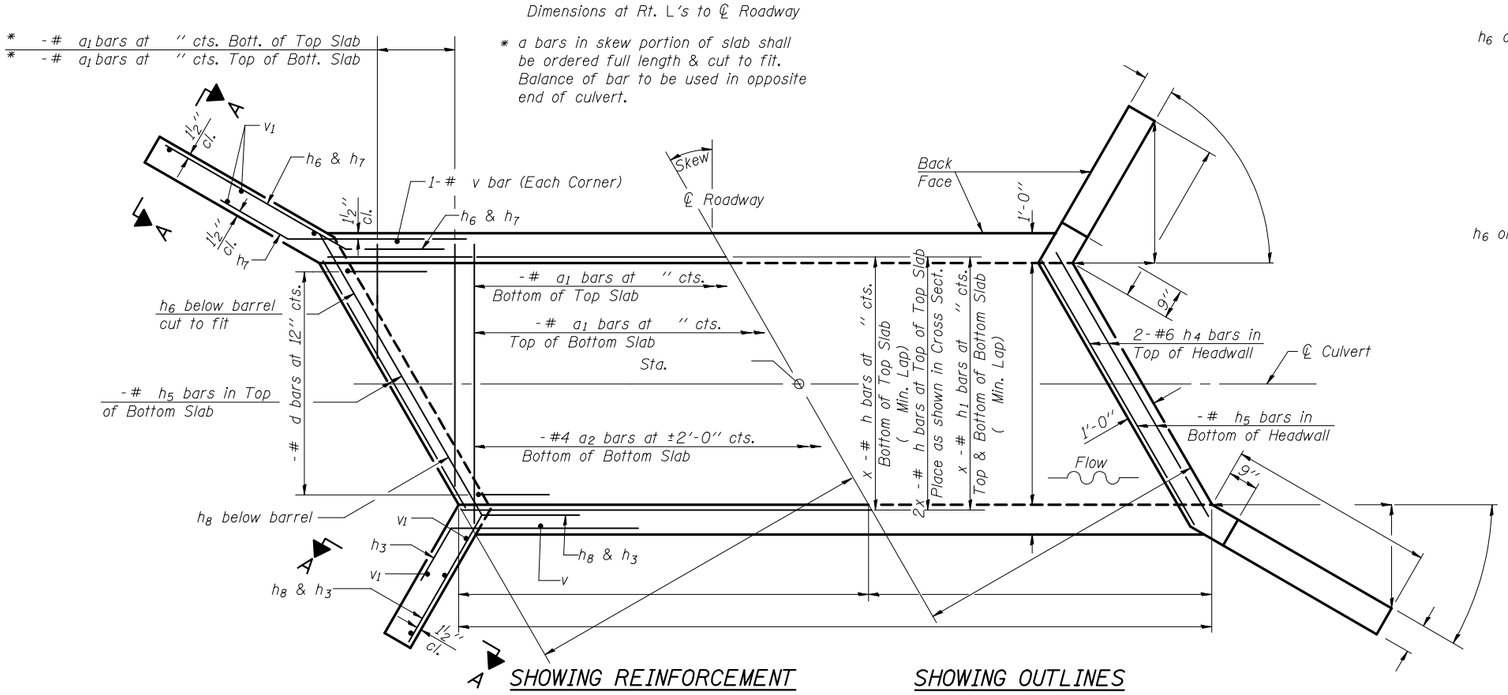

SHOWING REINFORCEMENT

SHOWING OUTLINES

PLAN

Dimensions at Rt. L's to ℄ Roadway

* a bars in skew portion of slab shall be ordered full length & cut to fit. Balance of bar to be used in opposite end of culvert.

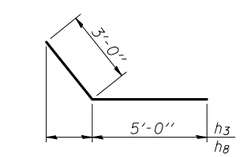

BARS h3 & h8

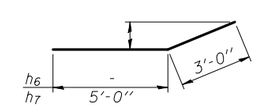

BARS h6 & h7

BILL OF MATERIAL

Bar	No.	Size	Length	Shape
a1				
a2		#4		
d		#4	4'-6"	
h				
h1				
h2				
h3			8'-0"	
h4		#6		
h5				
h6				
h7			8'-0"	
h8				
v				
v1		#4		
Concrete Box Culverts			Cu. Yd.	
Reinforcement Bars			Pound	

NOTES

A distance of half the length of the wingwall but not less than six feet of the barrel shall be poured monolithically with the wingwalls.

Reinforcement bars shall conform to the requirements of ASTM A 706 Gr 60. See Special Provisions.

Bars indicated thus 12 x 4-#5 etc. indicates 12 lines of bars with 4 lengths per line.

DESIGN STRESSES

fy = 60,000 psi
f'c = 3,500 psi

LOADING HS 20-44 & ALT.

SSB-H-L 7-1-10

FILE NAME =	USER NAME =	DESIGNED -	REVISED -
		CHECKED -	REVISED -
	PLOT SCALE =	DRAWN -	REVISED -
	PLOT DATE =	CHECKED -	REVISED -

STATE OF ILLINOIS
DEPARTMENT OF TRANSPORTATION

SHEET NO. OF SHEETS

F.A. RTE.	SECTION	COUNTY	TOTAL SHEETS	SHEET NO.
		CONTRACT NO.		
	ILLINOIS FED. AID PROJECT			

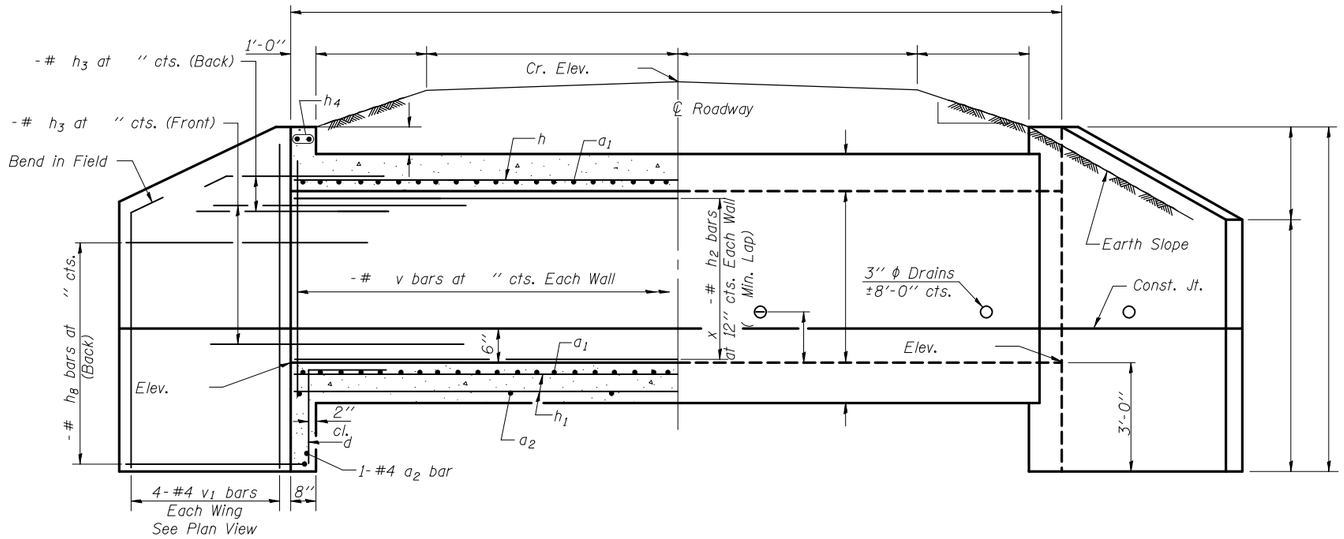

HALF LONG. SECTION

HALF ELEVATION

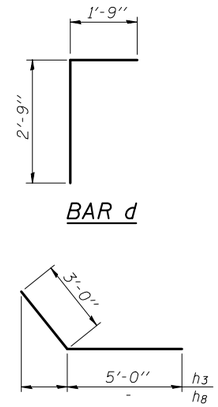

BAR d

BARS h3 & h8

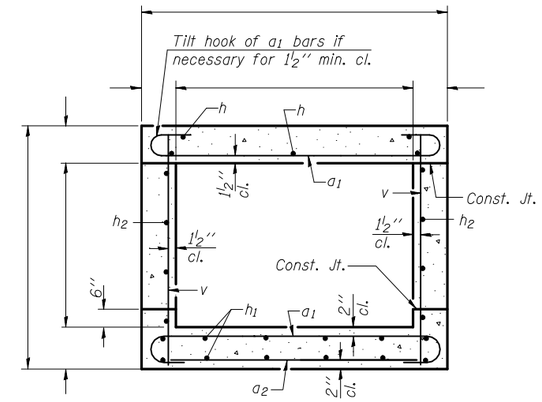

SECTION THRU BARREL

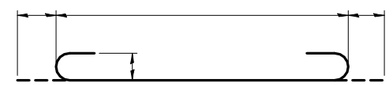

BAR a1

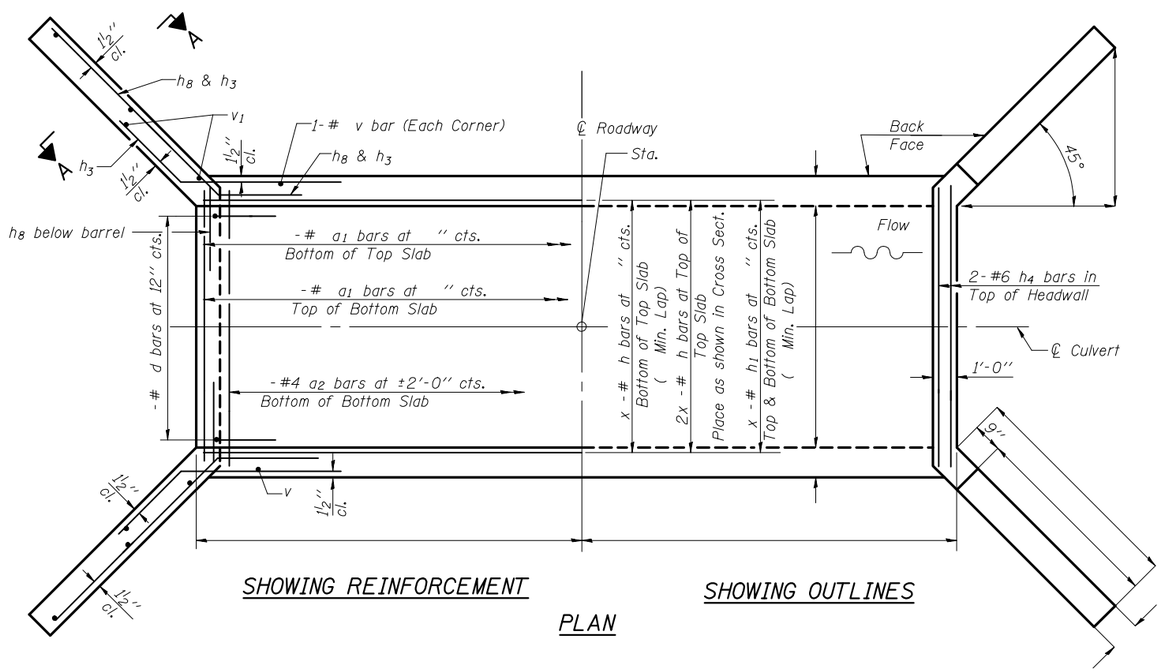

SHOWING REINFORCEMENT

SHOWING OUTLINES

PLAN

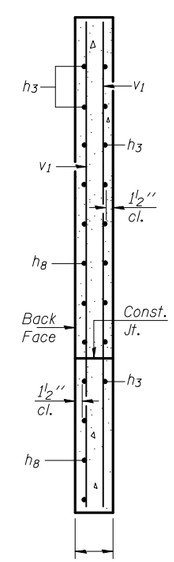

SECTION A-A

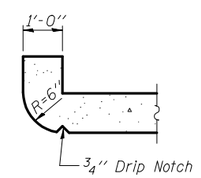

SECTION THRU HEADWALL

(Up Stream End Only)

DESIGN STRESSES

fy = 60,000 psi
f'c = 3,500 psi

LOADING HS 20-44 & ALT.

BILL OF MATERIAL

Bar	No.	Size	Length	Shape
a1				
a2		#4		
d		#4	4'-6"	
h				
h1				
h2				
h3			8'-0"	
h4		#6		
h8				
v				
v1		#4		
Concrete Box Culverts			Cu. Yd.	
Reinforcement Bars			Pound	

NOTES

A distance of half the length of the wingwall but not less than six feet of the barrel shall be poured monolithically with the wingwalls.

Reinforcement bars shall conform to the requirements of ASTM A 706 Gr 60. See Special Provisions.

Bars indicated thus 12 x 4-#5 etc. indicates 12 lines of bars with 4 lengths per line.

SSB-H-0 7-1-10

FILE NAME =	USER NAME =	DESIGNED -	REVISED -	STATE OF ILLINOIS DEPARTMENT OF TRANSPORTATION	SHEET NO. OF SHEETS	F.A. RTE.	SECTION	COUNTY	TOTAL SHEETS	SHEET NO.
		CHECKED -	REVISED -							
	PLOT SCALE =	DRAWN -	REVISED -					CONTRACT NO.		
	PLOT DATE =	CHECKED -	REVISED -				ILLINOIS	FED. AID PROJECT		

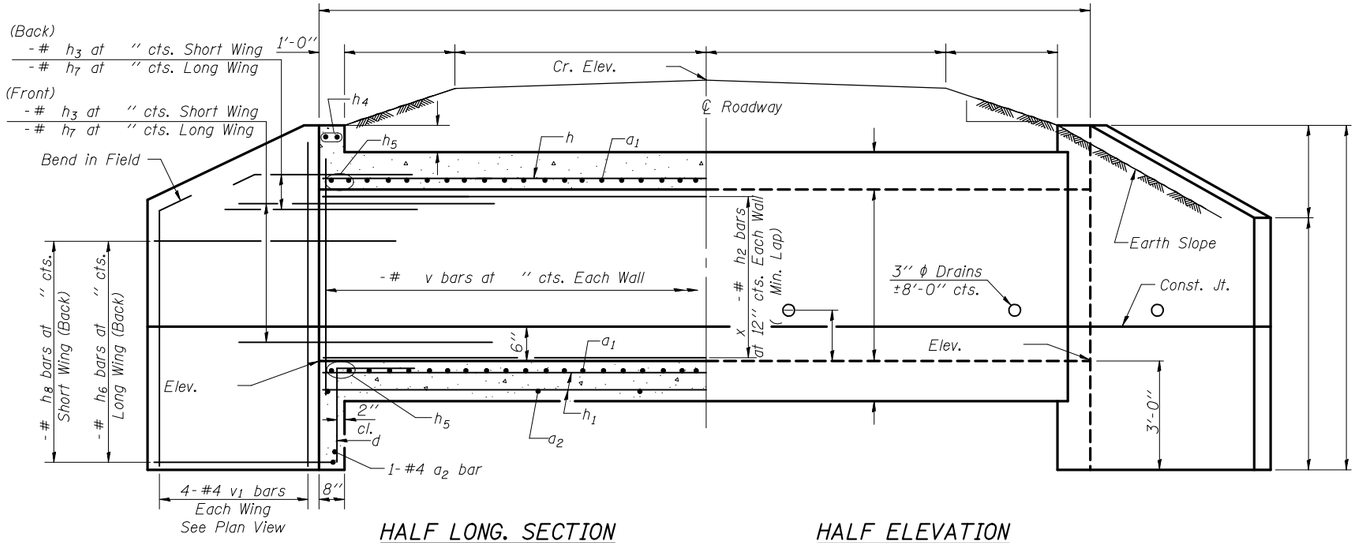

HALF LONG. SECTION

HALF ELEVATION

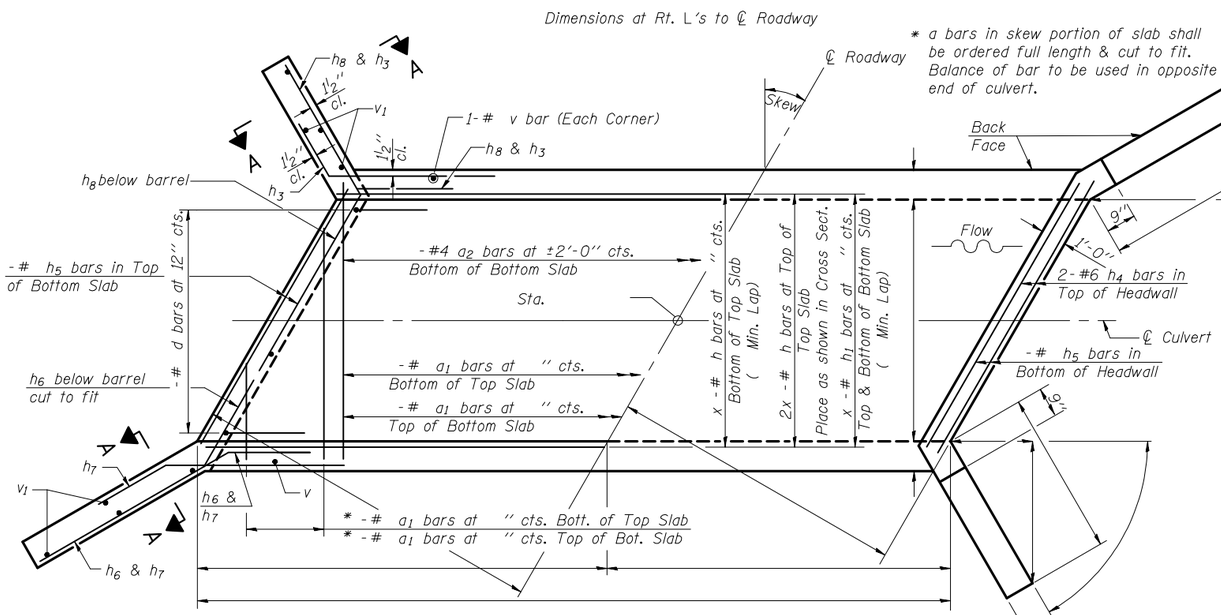

SHOWING REINFORCEMENT

SHOWING OUTLINES

PLAN

* a bars in skew portion of slab shall be ordered full length & cut to fit. Balance of bar to be used in opposite end of culvert.

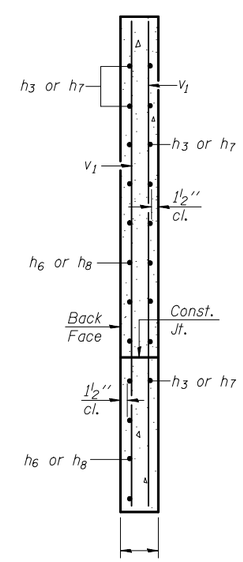

SECTION A-A

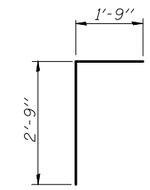

BAR d

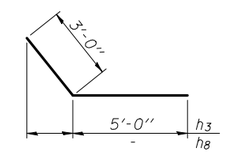

BARS h3 & h8

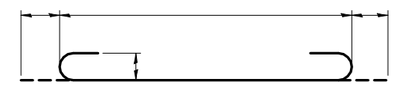

BAR a1

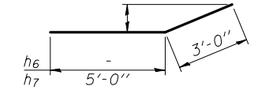

BARS h6 & h7

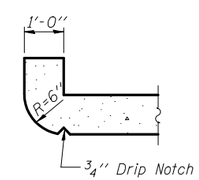

SECTION THRU HEADWALL

(Up Stream End Only)

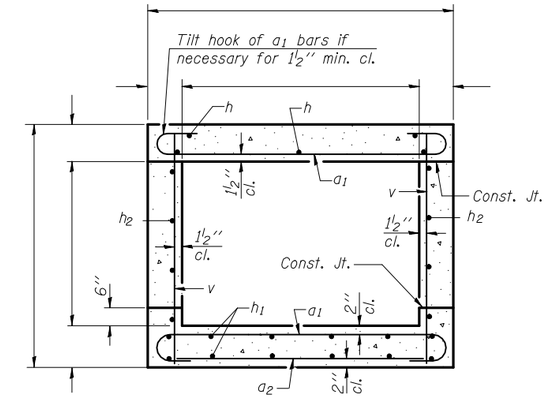

SECTION THRU BARREL

BILL OF MATERIAL

Bar	No.	Size	Length	Shape
a1				
a2		#4		
d		#4	4'-6"	
h				
h1				
h2				
h3			8'-0"	
h4		#6		
h5				
h6				
h7			8'-0"	
h8				
v				
v1		#4		
Concrete Box Culverts			Cu. Yd.	
Reinforcement Bars			Pound	

DESIGN STRESSES

fy = 60,000 psi
f'c = 3,500 psi

LOADING HS 20-44 & ALT.

NOTES

A distance of half the length of the wingwall but not less than six feet of the barrel shall be poured monolithically with the wingwalls.

Reinforcement bars shall conform to the requirements of ASTM A 706 Gr 60. See Special Provisions.

Bars indicated thus 12 x 4-#5 etc. indicates 12 lines of bars with 4 lengths per line.

SSB-H-R 7-1-10

FILE NAME =	USER NAME =	DESIGNED -	REVISED -	STATE OF ILLINOIS DEPARTMENT OF TRANSPORTATION	SHEET NO. OF SHEETS	F.A. RTE.	SECTION	COUNTY	TOTAL SHEETS	SHEET NO.
		CHECKED -	REVISED -							
	PLOT SCALE =	DRAWN -	REVISED -					CONTRACT NO.		
	PLOT DATE =	CHECKED -	REVISED -				ILLINOIS	FED. AID PROJECT		

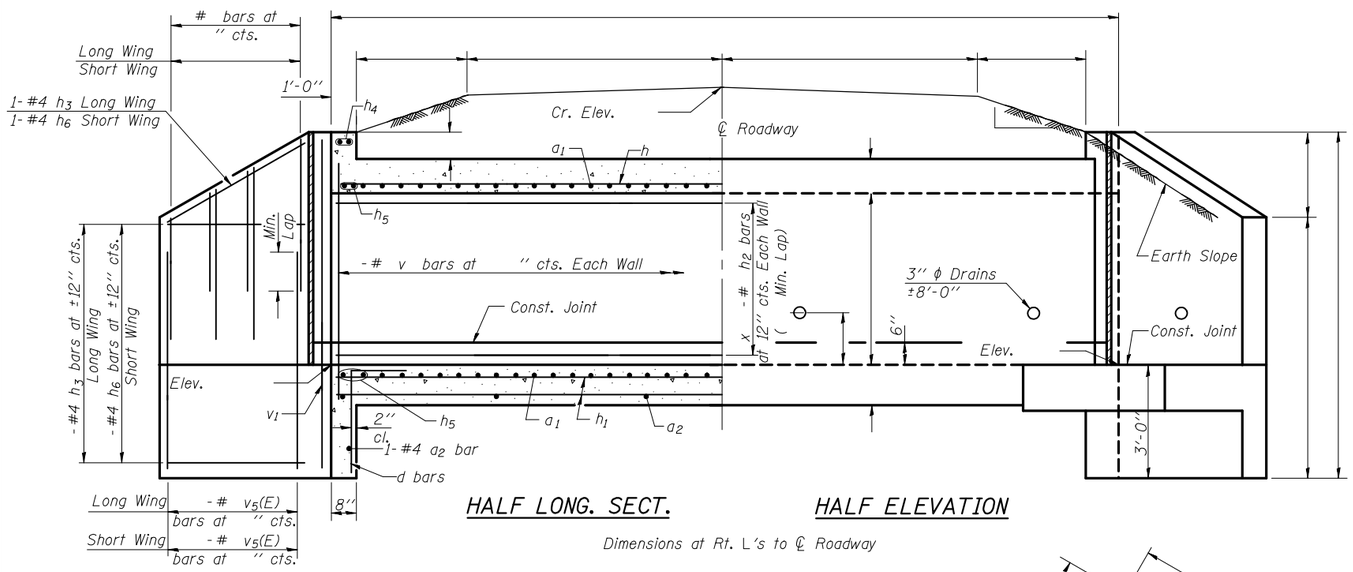

HALF LONG. SECT.

HALF ELEVATION

Dimensions at Rt. L's to ℄ Roadway

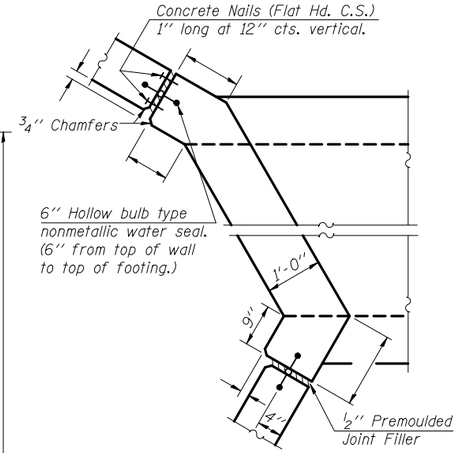

CORNER DETAIL

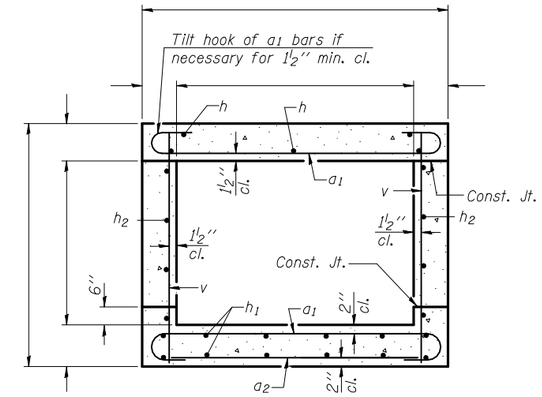

SECTION THRU BARREL

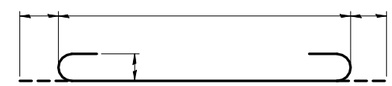

BAR a1

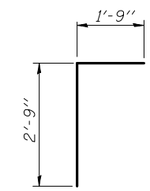

BAR d

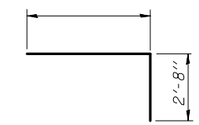

BAR z

DESIGN STRESSES

fy = 60,000 psi
f'c = 3,500 psi

Max. Soil Pressure under footing = psf

LOADING HS 20-44 & ALT.

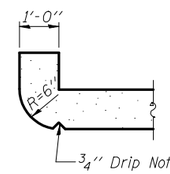

SECTION THRU HEADWALL

(Up Stream End Only)

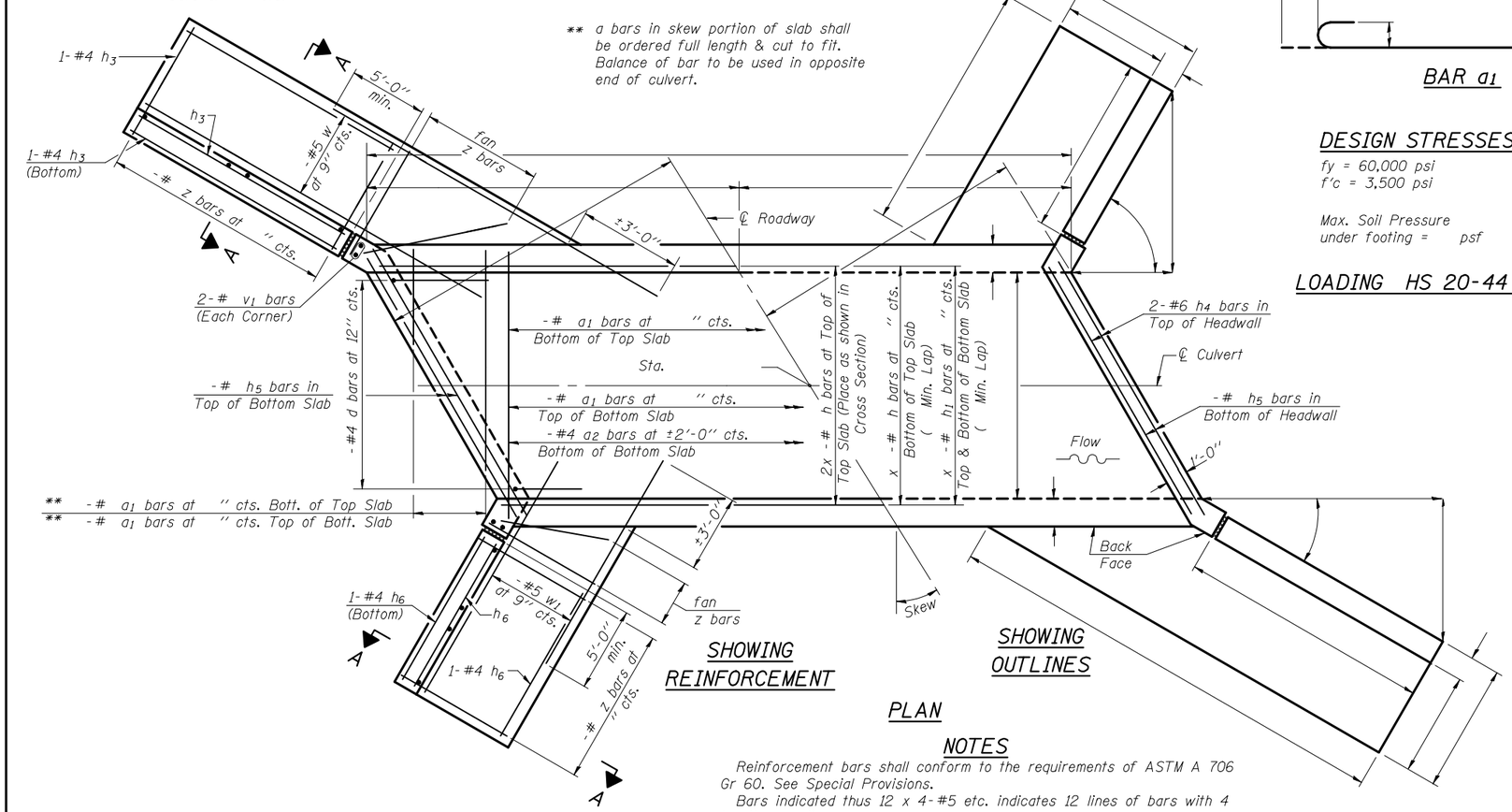

** a bars in skew portion of slab shall be ordered full length & cut to fit. Balance of bar to be used in opposite end of culvert.

SHOWING REINFORCEMENT

SHOWING OUTLINES

PLAN

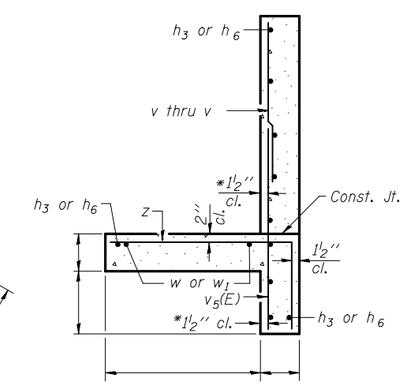

SECTION A-A

* v bars shall not be placed more than 1 1/2'' cl. from back face of wingwall.

BILL OF MATERIAL

Bar	No.	Size	Length	Shape
a1				
a2		#4		
d		#4	4'-6''	
h				
h1				
h2				
h3		#4		
h4		#6		
h5				
h6		#4		
v				
v1				
v2				
v3				
v4				
v5(E)				
w		#5		
w1		#5		
z				
Concrete Box Culverts			Cu. Yd.	
Reinforcement Bars, Epoxy Coated			Pound	
Reinforcement Bars			Pound	

NOTES

Reinforcement bars shall conform to the requirements of ASTM A 706 Gr 60. See Special Provisions.

Bars indicated thus 12 x 4-#5 etc. indicates 12 lines of bars with 4 lengths per line.

Reinforcement bars designated (E) shall be epoxy coated.

SSB-L-L 7-1-10

FILE NAME =	USER NAME =	DESIGNED -	REVISED -	STATE OF ILLINOIS DEPARTMENT OF TRANSPORTATION		F.A. RTE.	SECTION	COUNTY	TOTAL SHEETS	SHEET NO.
		CHECKED -	REVISED -							
	PLOT SCALE =	DRAWN -	REVISED -					CONTRACT NO.		
	PLOT DATE =	CHECKED -	REVISED -		SHEET NO. OF SHEETS		ILLINOIS	FED. AID PROJECT		

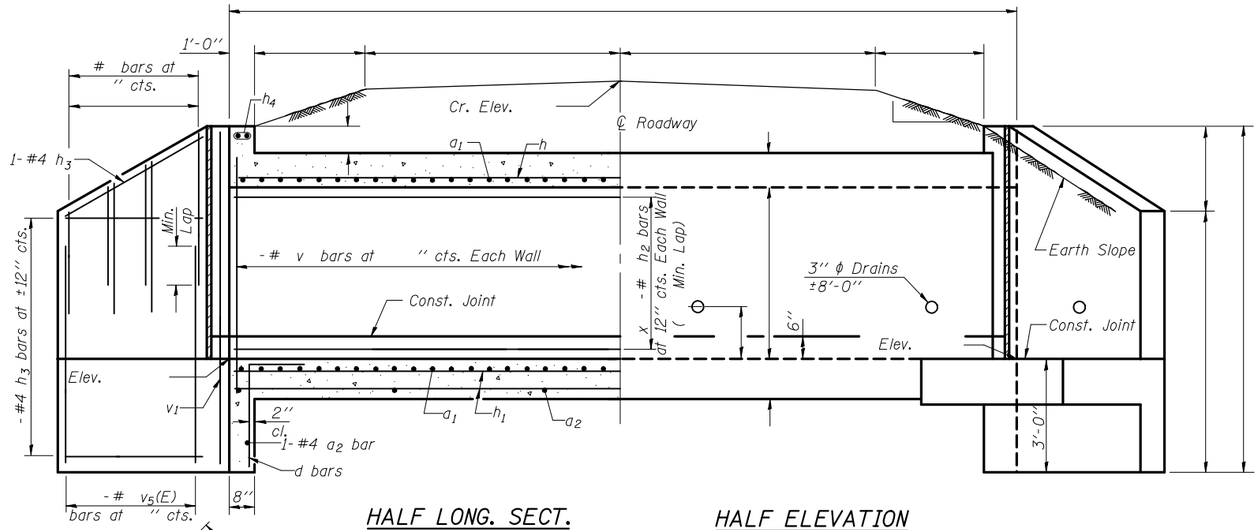

HALF LONG. SECT.

HALF ELEVATION

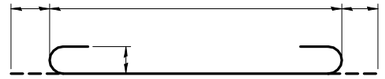

BAR a1

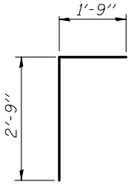

BAR d

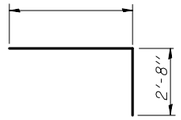

BAR z

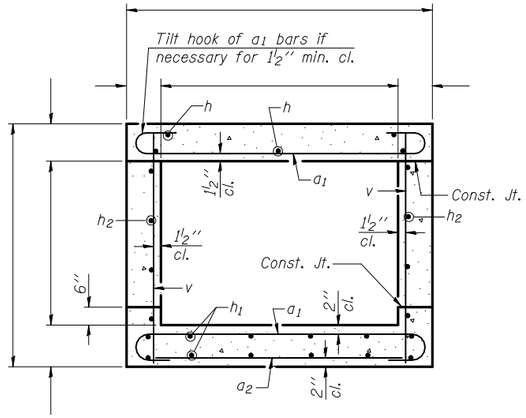

SECTION THRU BARREL

DESIGN STRESSES

fy = 60,000 psi
f'c = 3,500 psi

Max. Soil Pressure under footing = psf

LOADING HS 20-44 & ALT.

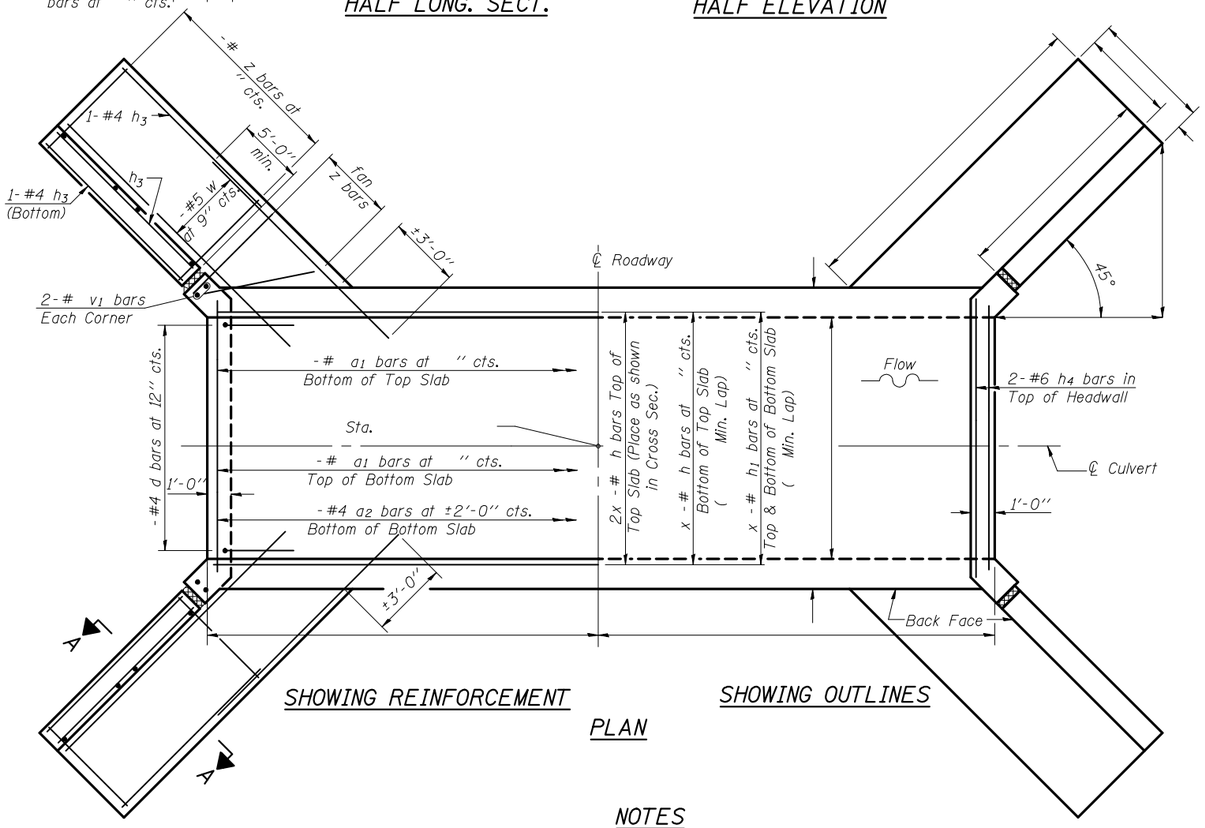

SHOWING REINFORCEMENT

SHOWING OUTLINES

PLAN

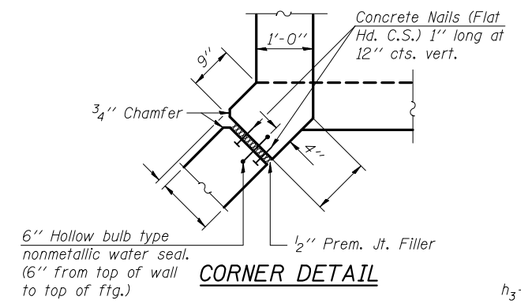

CORNER DETAIL

BILL OF MATERIAL

Bar	No.	Size	Length	Shape
a1				
a2		#4		
d		#4	4'-6"	
h				
h1				
h2				
h3		#4		
h4		#6		
v				
v1				
v2				
v3				
v4				
v5(E)				
w		#5		
z				
Concrete Box Culverts			Cu. Yd.	
Reinforcement Bars, Epoxy Coated			Pound	
Reinforcement Bars			Pound	

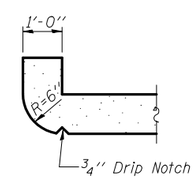

SECTION THRU HEADWALL

(Up Stream End Only)

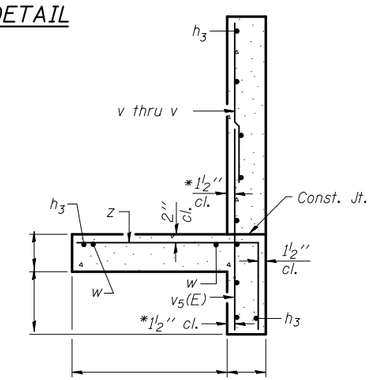

SECTION A-A

* v bars shall not be placed more than 1½" cl. from back face of wingwall.

NOTES

Reinforcement bars shall conform to the requirements of ASTM A 706 Gr 60. See Special Provisions.

Bars indicated thus 12 x 4-#5 etc. indicates 12 lines of bars with 4 lengths per line.

Reinforcement bars designated (E) shall be epoxy coated.

SSB-L-0 7-1-10

FILE NAME =	USER NAME =	DESIGNED -	REVISED -	STATE OF ILLINOIS DEPARTMENT OF TRANSPORTATION	F.A. RTE.	SECTION	COUNTY	TOTAL SHEETS	SHEET NO.
		CHECKED -	REVISED -						
	PLOT SCALE =	DRAWN -	REVISED -				CONTRACT NO.		
	PLOT DATE =	CHECKED -	REVISED -	SHEET NO. OF SHEETS		ILLINOIS	FED. AID PROJECT		

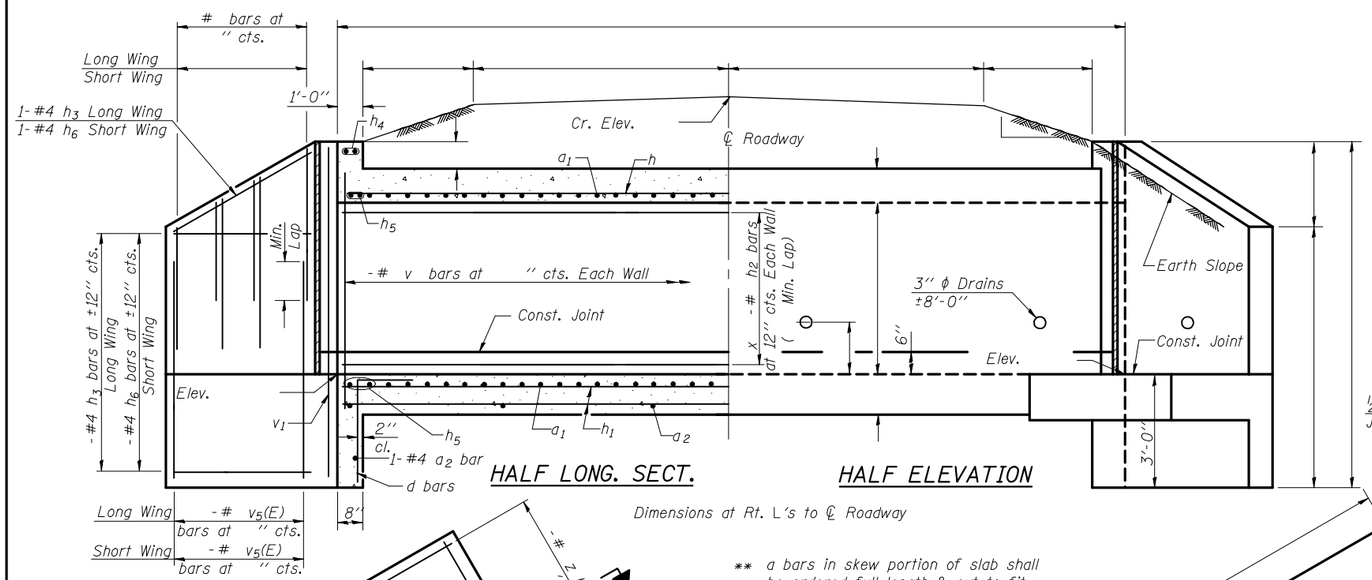

HALF LONG. SECT.

HALF ELEVATION

Dimensions at Rt. L's to ℄ Roadway

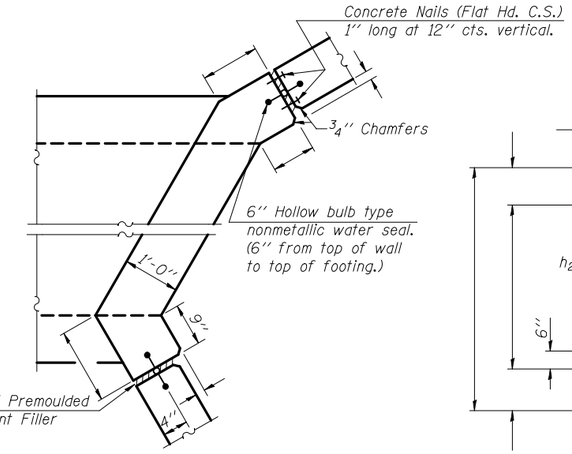

CORNER DETAIL

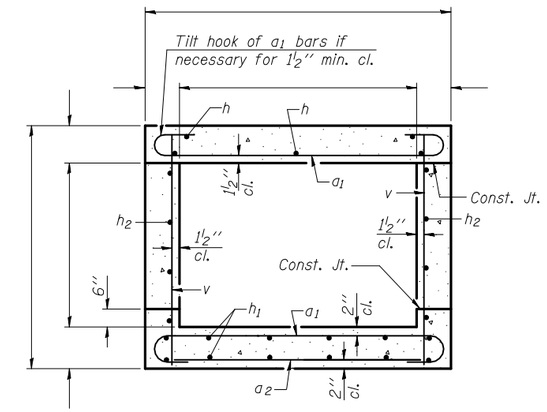

SECTION THRU BARREL

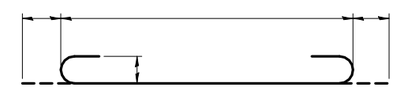

BAR a1

DESIGN STRESSES

fy = 60,000 psi
f'c = 3,500 psi

Max. Soil Pressure under footing = psf

LOADING HS 20-44 & ALT.

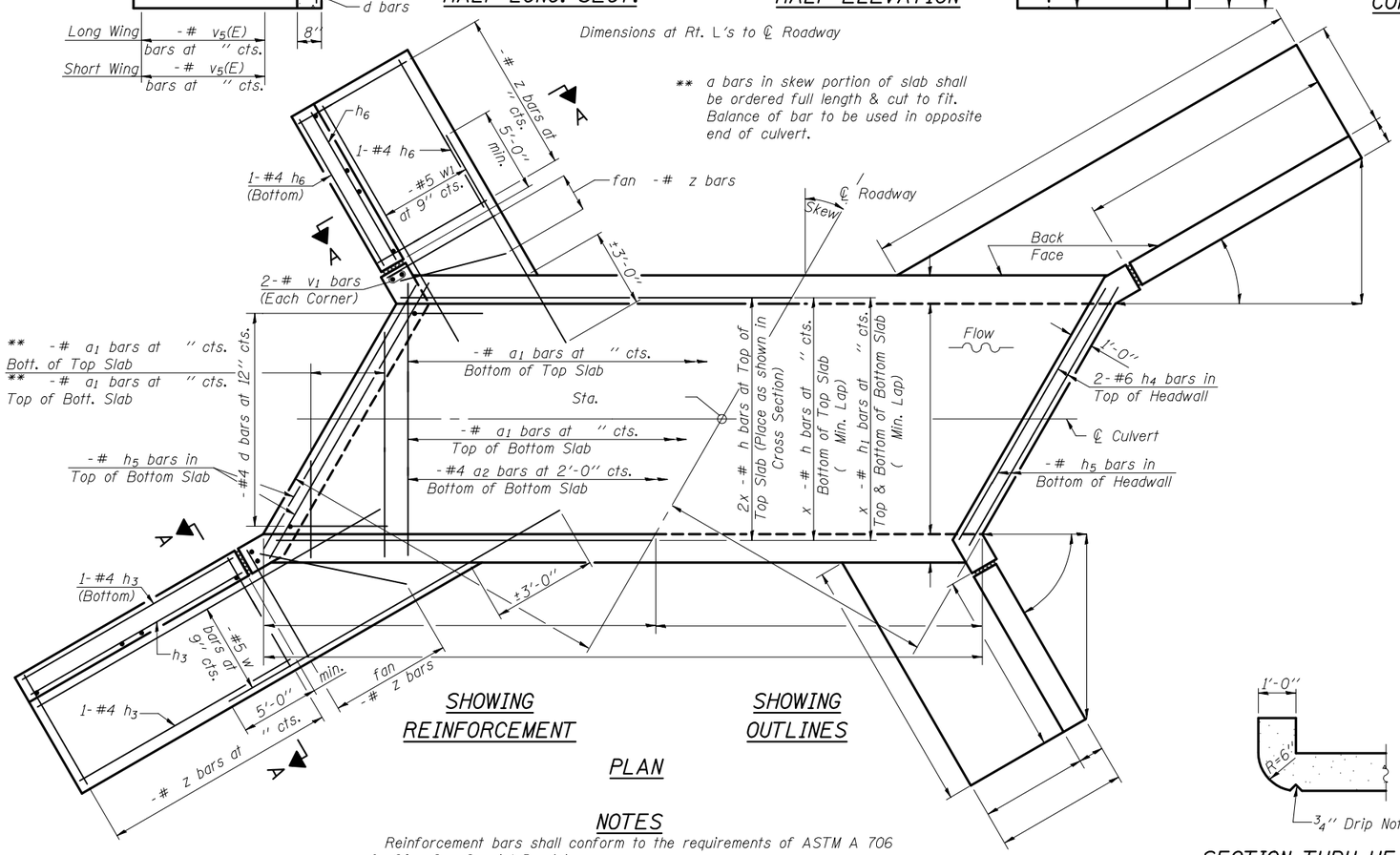

SHOWING REINFORCEMENT

SHOWING OUTLINES

PLAN

** a bars in skew portion of slab shall be ordered full length & cut to fit. Balance of bar to be used in opposite end of culvert.

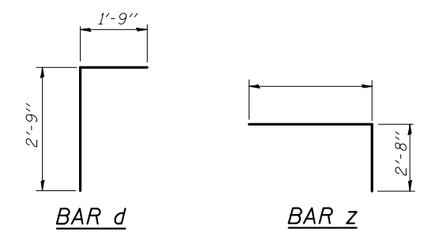

BAR d

BAR z

BILL OF MATERIAL

Bar	No.	Size	Length	Shape
a1				
a2		#4		
d		#4	4'-6''	
h				
h1				
h2				
h3		#4		
h4		#6		
h5				
h6		#4		
v				
v1				
v2				
v3				
v4				
v5(E)				
w		#5		
w1		#5		
z				
Concrete Box Culverts			Cu. Yd.	
Reinforcement Bars, Epoxy Coated			Pound	
Reinforcement Bars			Pound	

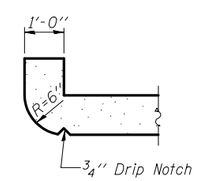

SECTION THRU HEADWALL
(Up Stream End Only)

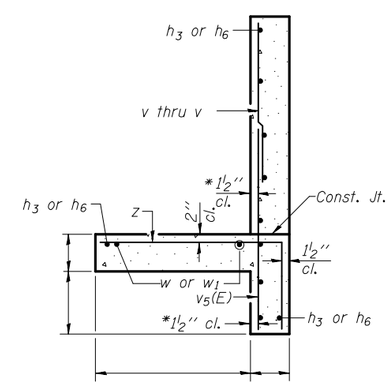

SECTION A-A

* v bars shall not be placed more than 1 1/2'' cl. from back face of wingwall.

NOTES

Reinforcement bars shall conform to the requirements of ASTM A 706 Gr 60. See Special Provisions.

Bars indicated thus 12 x 4-#5 etc. indicates 12 lines of bars with 4 lengths per line.

Reinforcement bars designated (E) shall be epoxy coated.

SSB-L-R 7-1-10

FILE NAME =	USER NAME =	DESIGNED -	REVISED -	STATE OF ILLINOIS DEPARTMENT OF TRANSPORTATION	SHEET NO. OF SHEETS	F.A. RTE.	SECTION	COUNTY	TOTAL SHEETS	SHEET NO.
		CHECKED -	REVISED -							
	PLOT SCALE =	DRAWN -	REVISED -					CONTRACT NO.		
	PLOT DATE =	CHECKED -	REVISED -					ILLINOIS FED. AID PROJECT		

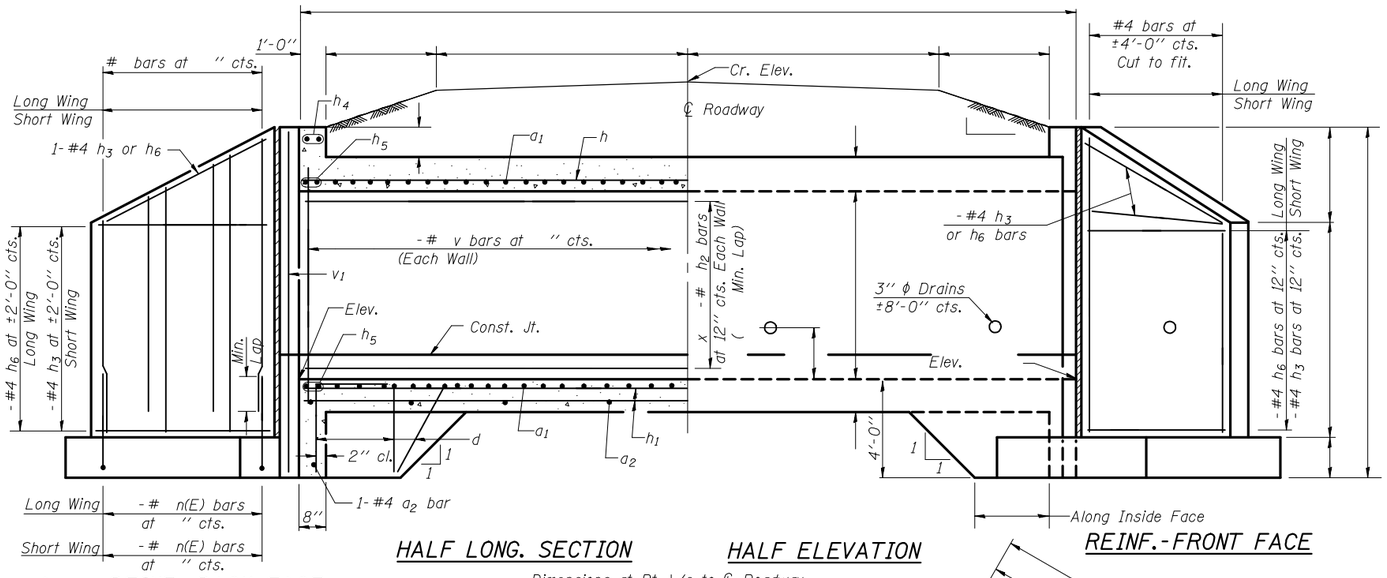

HALF LONG. SECTION

HALF ELEVATION

REINF.-FRONT FACE

REINF.-BACK FACE

Dimensions at Rt. L's to ℄ Roadway

* a bars in skew portion of slab shall be ordered full length & cut to fit. Balance of bar to be used in opposite end of culvert.

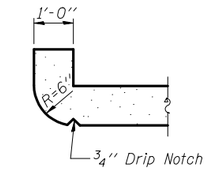

SECTION THRU HEADWALL

(Up Stream End Only)

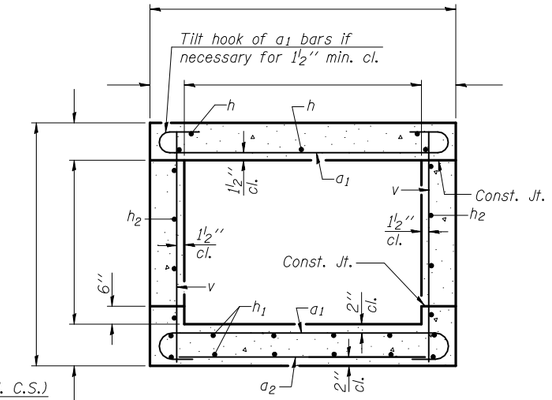

SECTION THRU BARREL

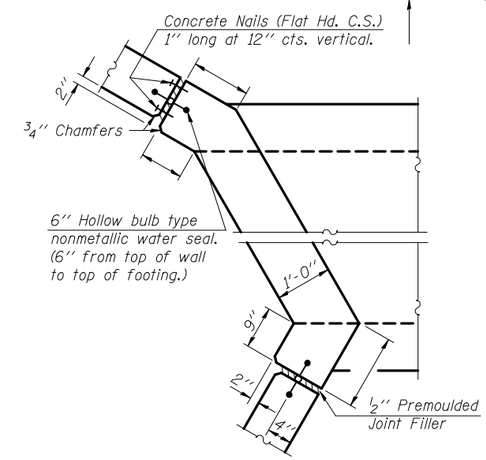

CORNER DETAIL

DESIGN STRESSES

fy = 60,000 psi
f'c = 3,500 psi

Max. Soil Pressure
under footing = psf

LOADING HS 20-44 & ALT.

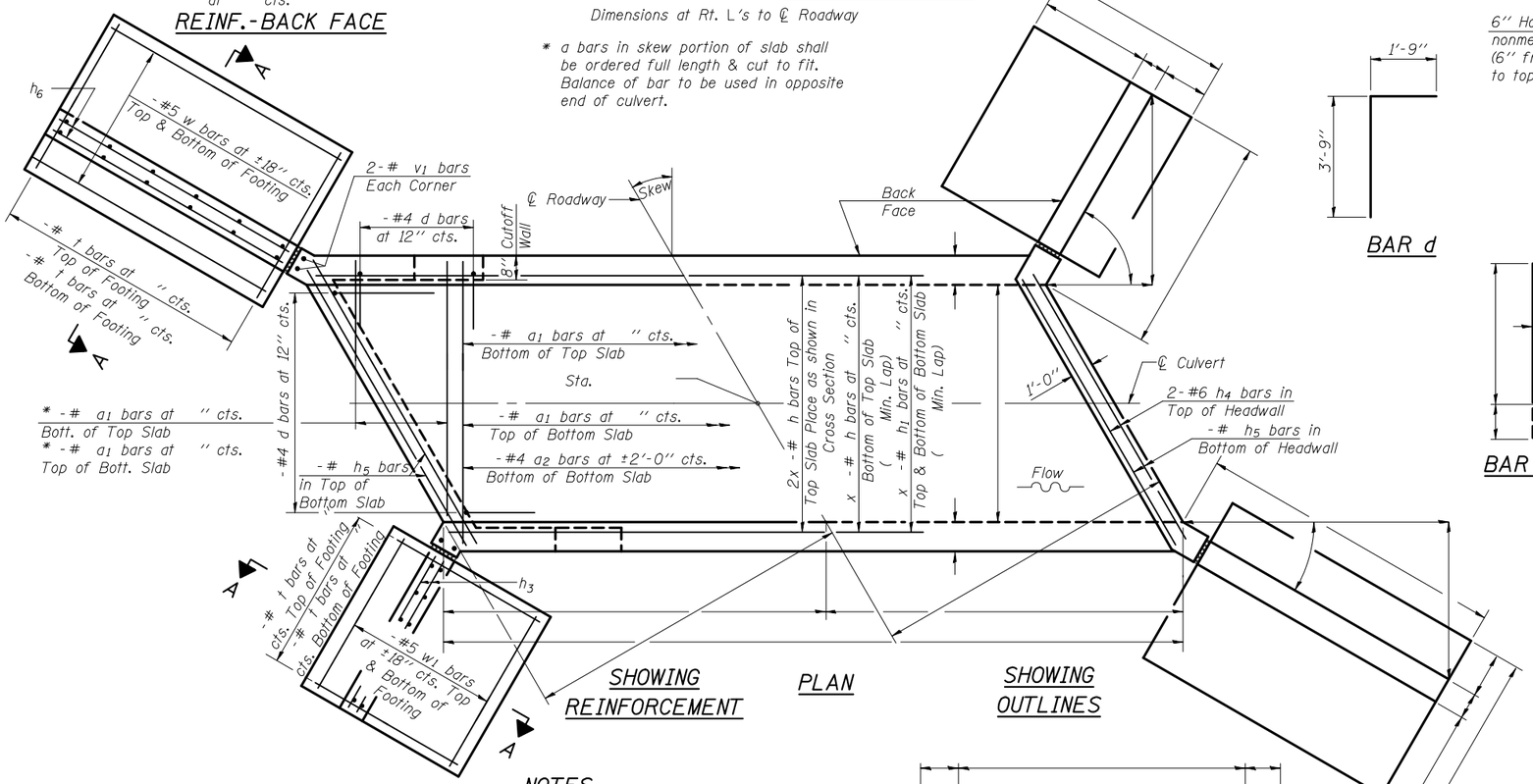

SHOWING REINFORCEMENT

PLAN

SHOWING OUTLINES

BAR d

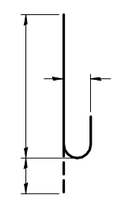

BAR n(E)

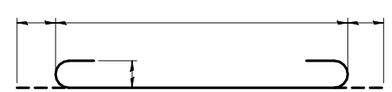

BAR a1

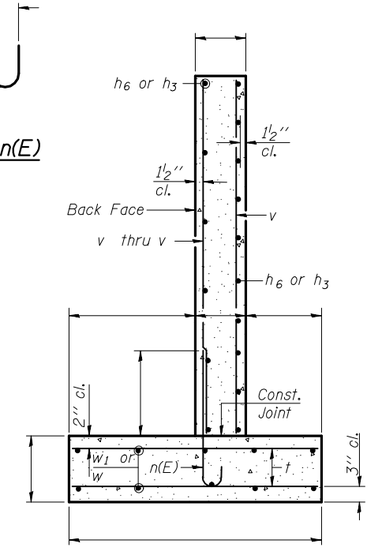

SECTION A-A

BILL OF MATERIAL

Bar	No.	Size	Length	Shape
a1				
a2		#4		
d		#4	5'-6"	
h				
h1				
h2				
h3		#4		
h4		#6		
h5				
h6		#4		
n(E)				
t				
v				
v1				
v2				
v3				
v4				
w		#5		
w1		#5		
Concrete Box Culverts			Cu. Yd.	
Reinforcement Bars, Epoxy Coated			Pound	
Reinforcement Bars			Pound	

NOTES

Reinforcement bars shall conform to the requirements of ASTM A 706 Gr 60. See Special Provisions.

Bars indicated thus 12 x 4-#5 etc. indicates 12 lines of bars with 4 lengths per line.

Reinforcement bars designated (E) shall be epoxy coated.

SSB-T1-L 7-1-10

FILE NAME =	USER NAME =	DESIGNED -	REVISED -
		CHECKED -	REVISED -
	PLOT SCALE =	DRAWN -	REVISED -
	PLOT DATE =	CHECKED -	REVISED -

STATE OF ILLINOIS
DEPARTMENT OF TRANSPORTATION

SHEET NO. OF SHEETS

F.A. RTE.	SECTION	COUNTY	TOTAL SHEETS	SHEET NO.

CONTRACT NO.

ILLINOIS FED. AID PROJECT

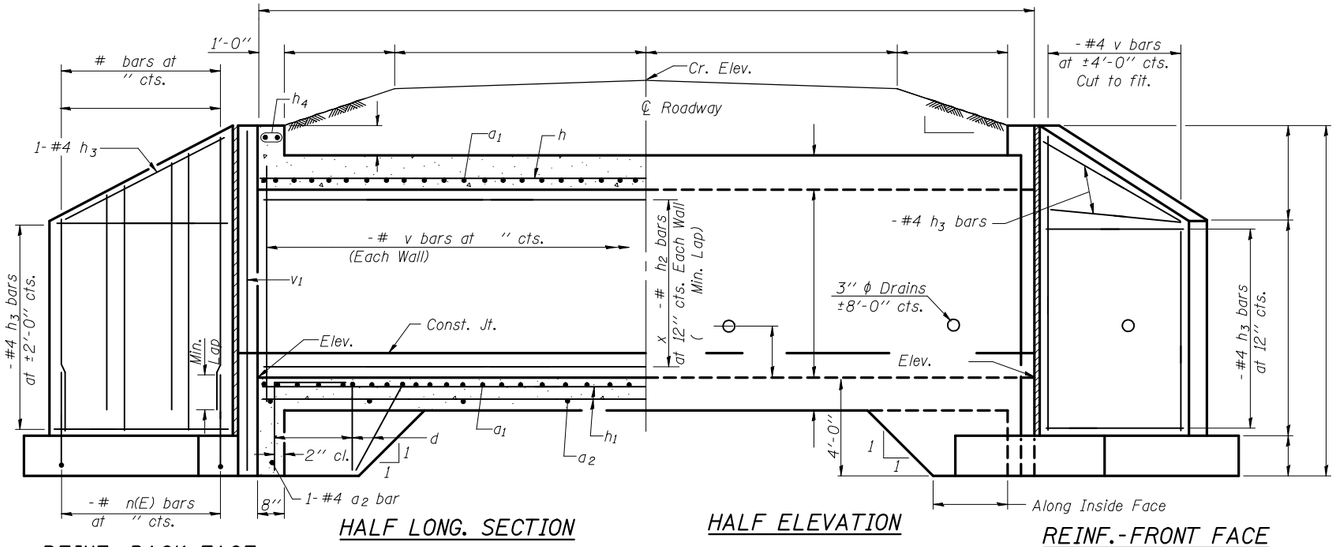

REINF.-BACK FACE

HALF LONG. SECTION

HALF ELEVATION

REINF.-FRONT FACE

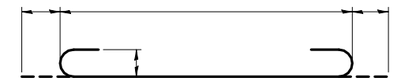

BAR a1

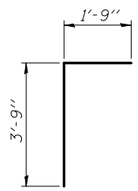

BAR d

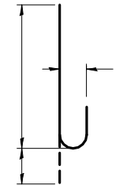

BAR n(E)

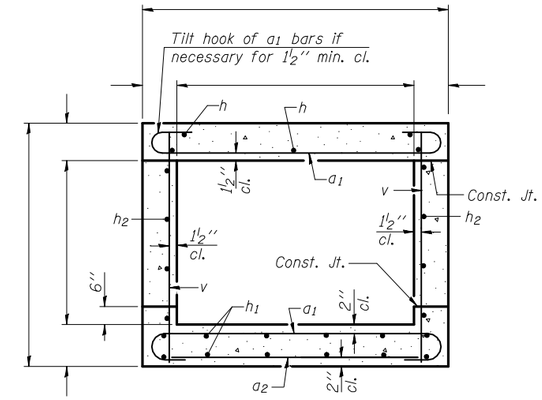

SECTION THRU BARREL

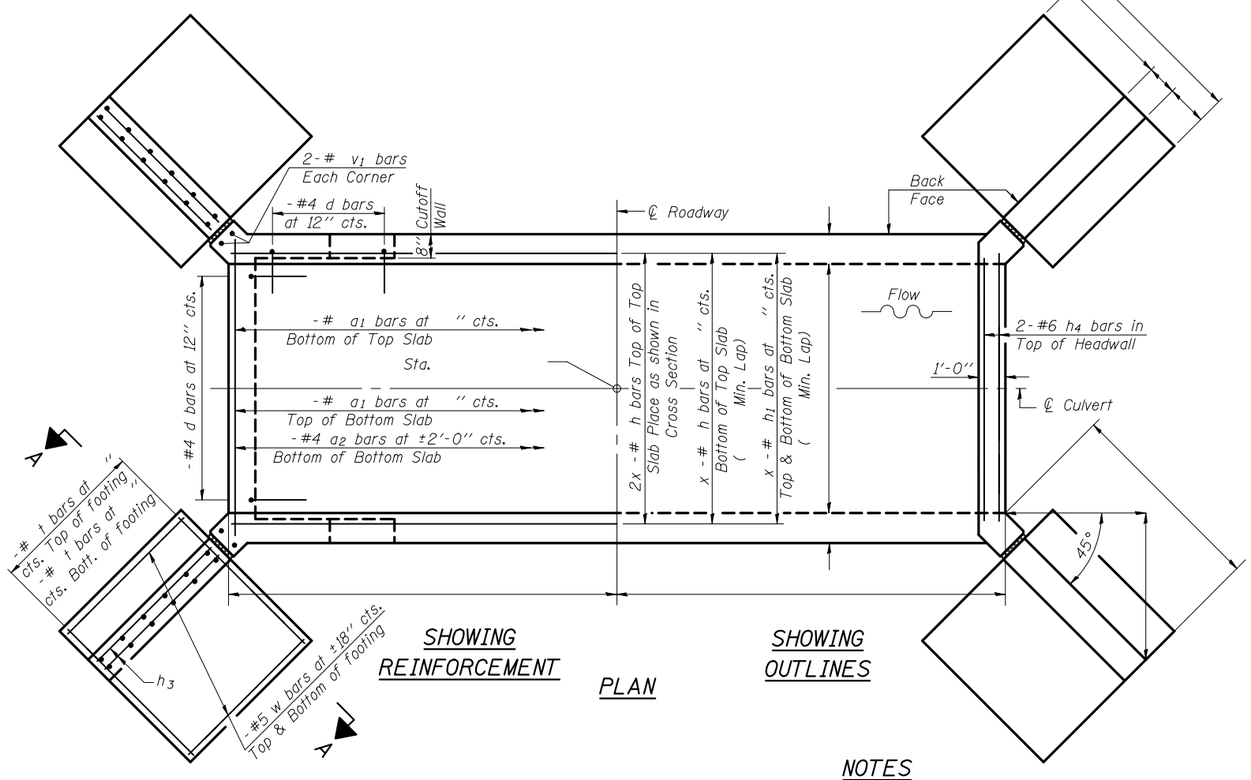

SHOWING REINFORCEMENT

PLAN

SHOWING OUTLINES

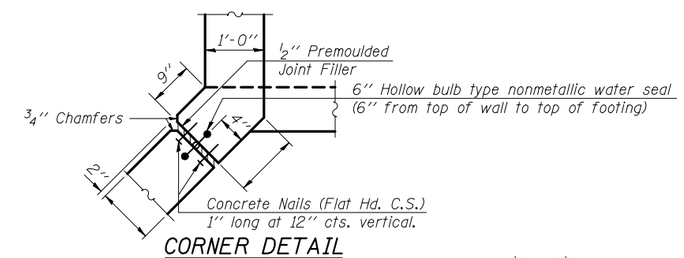

CORNER DETAIL

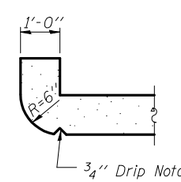

SECTION THRU HEADWALL

(Up Stream End Only)

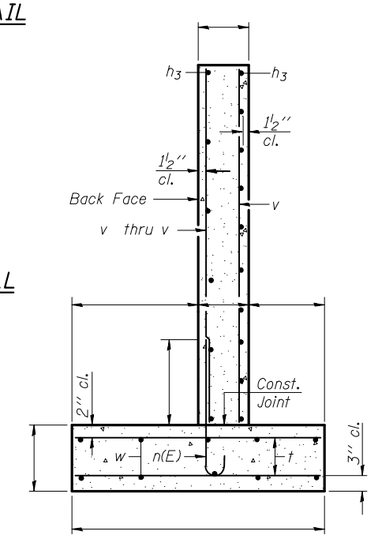

SECTION A-A

BILL OF MATERIAL

Bar	No.	Size	Length	Shape
a1				
a2		#4		
d		#4	5'-6"	
h				
h1				
h2				
h3		#4		
h4		#6		
n(E)				
t				
v				
v1				
v2				
v3				
v4				
w		#5		
Concrete Box Culverts			Cu. Yd.	
Reinforcement Bars, Epoxy Coated			Pound	
Reinforcement Bars			Pound	

DESIGN STRESSES

fy = 60,000 psi
f'c = 3,500 psi

Max. Soil Pressure under footing = psf

LOADING HS 20-44 & ALT.

NOTES

Reinforcement bars shall conform to the requirements of ASTM A 706 Gr 60. See Special Provisions.

Bars indicated thus 12 x 4-#5 etc. indicates 12 lines of bars with 4 lengths per line.

Reinforcement bars designated (E) shall be epoxy coated.

SSB-T1-0 7-1-10

FILE NAME =	USER NAME =	DESIGNED -	REVISED -	STATE OF ILLINOIS DEPARTMENT OF TRANSPORTATION	SHEET NO. OF SHEETS	F.A. RTE.	SECTION	COUNTY	TOTAL SHEETS	SHEET NO.
		CHECKED -	REVISED -							
	PLOT SCALE =	DRAWN -	REVISED -					CONTRACT NO.		
	PLOT DATE =	CHECKED -	REVISED -				ILLINOIS	FED. AID PROJECT		

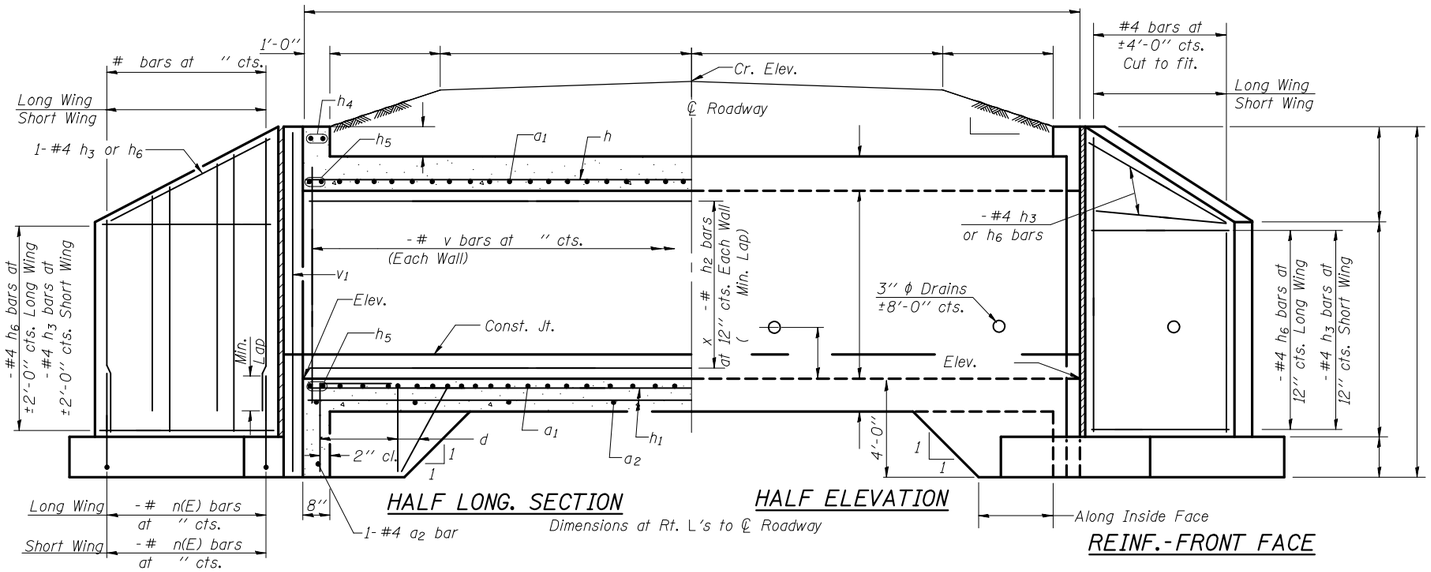

HALF LONG. SECTION

HALF ELEVATION

Dimensions at Rt. L's to ℄ Roadway

REINF.-FRONT FACE

REINF.-BACK FACE

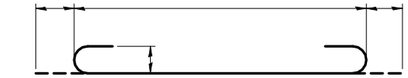

BAR a1

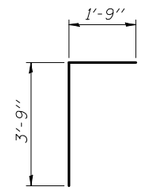

BAR d

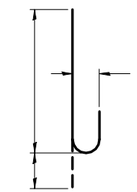

BAR n(E)

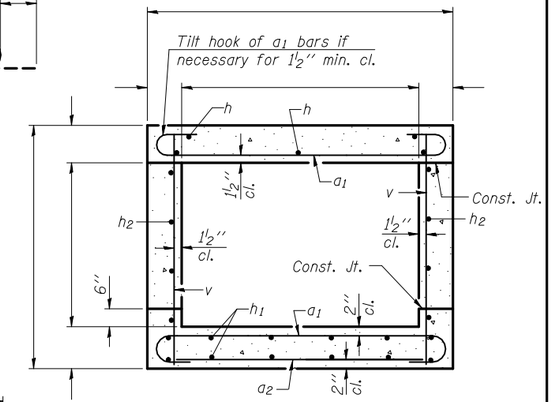

SECTION THRU BARREL

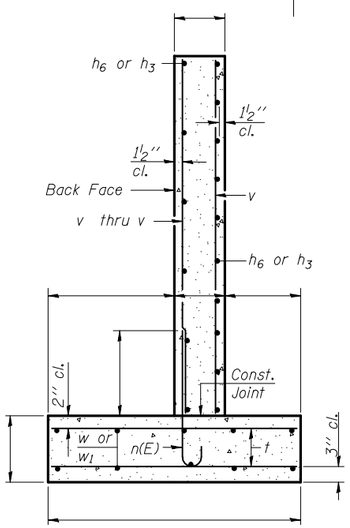

SECTION A-A

DESIGN STRESSES

fy = 60,000 psi
f'c = 3,500 psi

Max. Soil Pressure under footing = psf

LOADING HS 20-44 & ALT.

SECTION THRU HEADWALL

(Up Stream End Only)

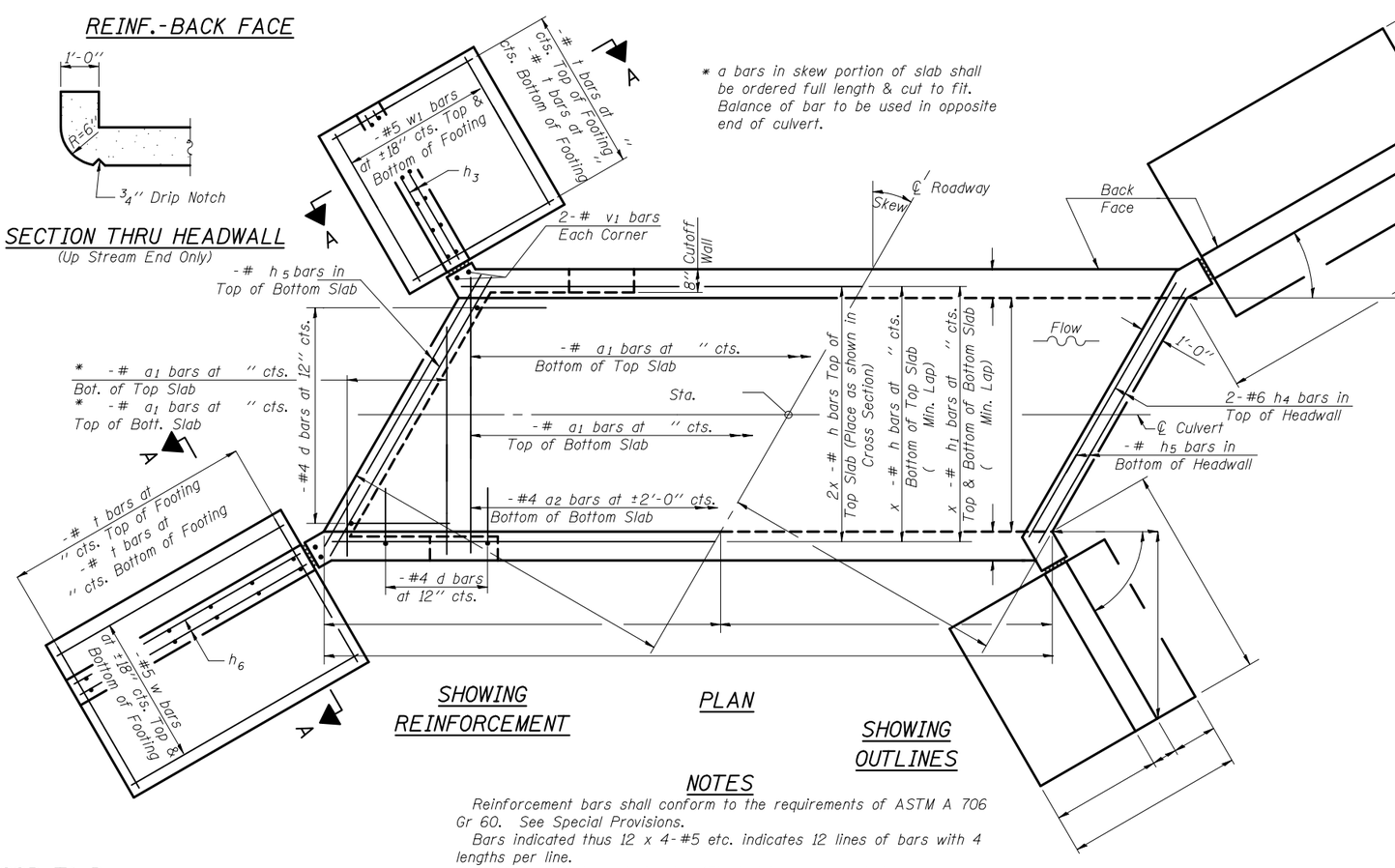

* a bars in skew portion of slab shall be ordered full length & cut to fit. Balance of bar to be used in opposite end of culvert.

SHOWING REINFORCEMENT

PLAN

SHOWING OUTLINES

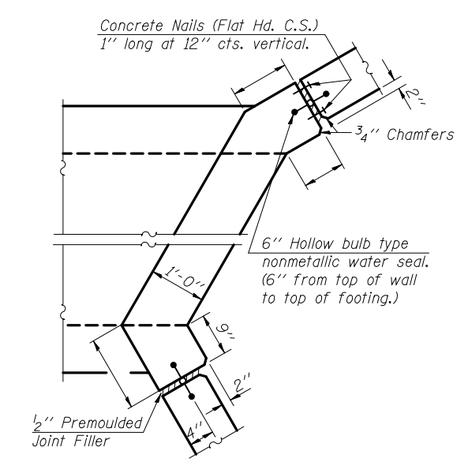

CORNER DETAIL

BILL OF MATERIAL

Bar	No.	Size	Length	Shape
a1				
a2		#4		
d		#4	5'-6"	
h				
h1				
h2				
h3		#4		
h4		#6		
h5				
h6		#4		
n(E)				
t				
v				
v1				
v2				
v3				
v4				
w		#5		
w1		#5		
Concrete Box Culverts			Cu. Yd.	
Reinforcement Bars, Epoxy Coated			Pound	
Reinforcement Bars			Pound	

NOTES

Reinforcement bars shall conform to the requirements of ASTM A 706 Gr 60. See Special Provisions.

Bars indicated thus 12 x 4-#5 etc. indicates 12 lines of bars with 4 lengths per line.

Reinforcement bars designated (E) shall be epoxy coated.

SSB-T1-R 7-1-10

FILE NAME =	USER NAME =	DESIGNED -	REVISED -	STATE OF ILLINOIS DEPARTMENT OF TRANSPORTATION	SHEET NO. OF SHEETS	F.A. RTE.	SECTION	COUNTY	TOTAL SHEETS	SHEET NO.
		CHECKED -	REVISED -					CONTRACT NO.		
	PLOT SCALE =	DRAWN -	REVISED -							
	PLOT DATE =	CHECKED -	REVISED -				ILLINOIS	FED. AID PROJECT		

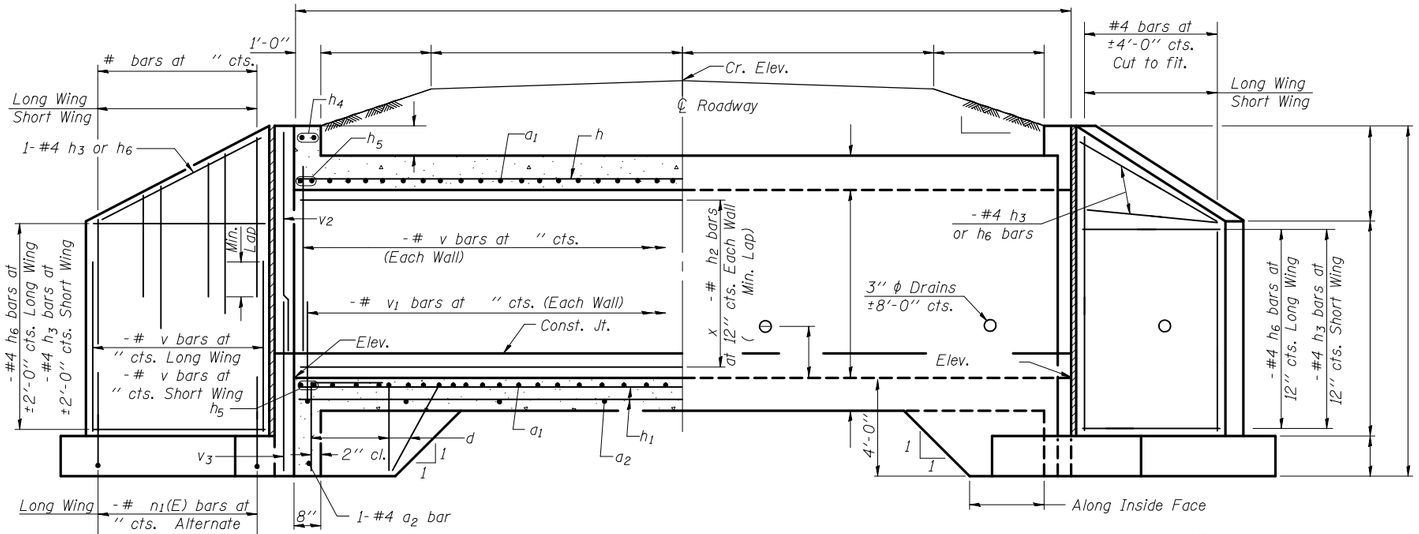

HALF LONG. SECTION

HALF ELEVATION

REINF.-FRONT FACE

Dimensions at Rt. L's to ℄ Roadway

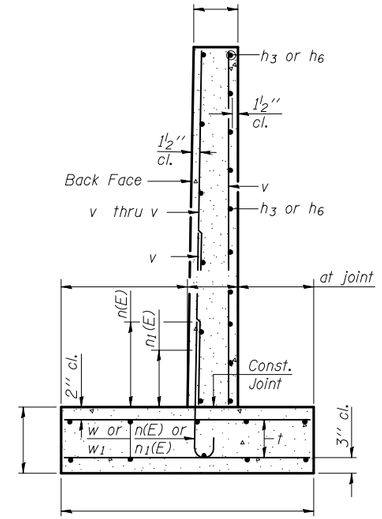

SECTION A-A

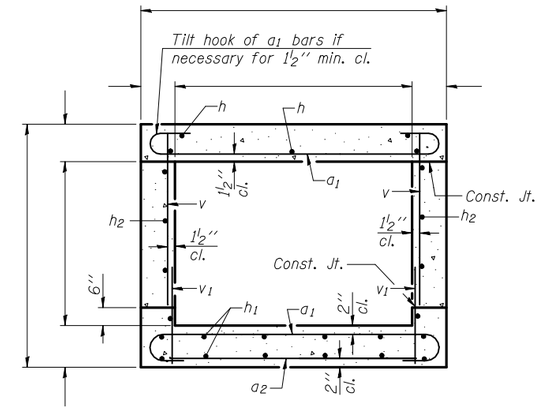

SECTION THRU BARREL

DESIGN STRESSES

fy = 60,000 psi
f'c = 3,500 psi

Max. Soil Pressure under footing = psf

LOADING HS 20-44 & ALT.

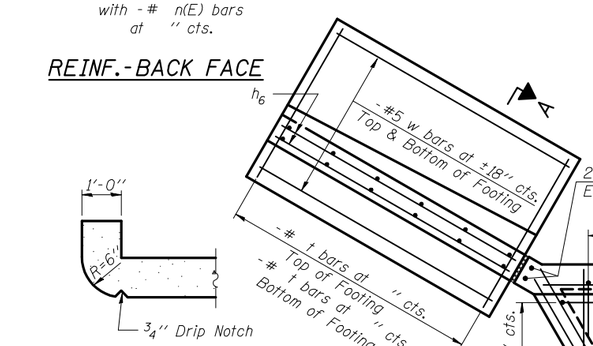

SECTION THRU HEADWALL
(Up Stream End Only)

* -# a1 bars at " cts. Bott. of Top Slab
* -# a1 bars at " cts. Top of Bott. Slab

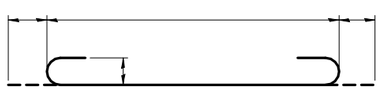

BAR a1

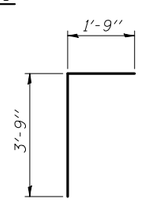

BAR d

* a bars in skew portion of slab shall be ordered full length & cut to fit. Balance of bar to be used in opposite end of culvert.

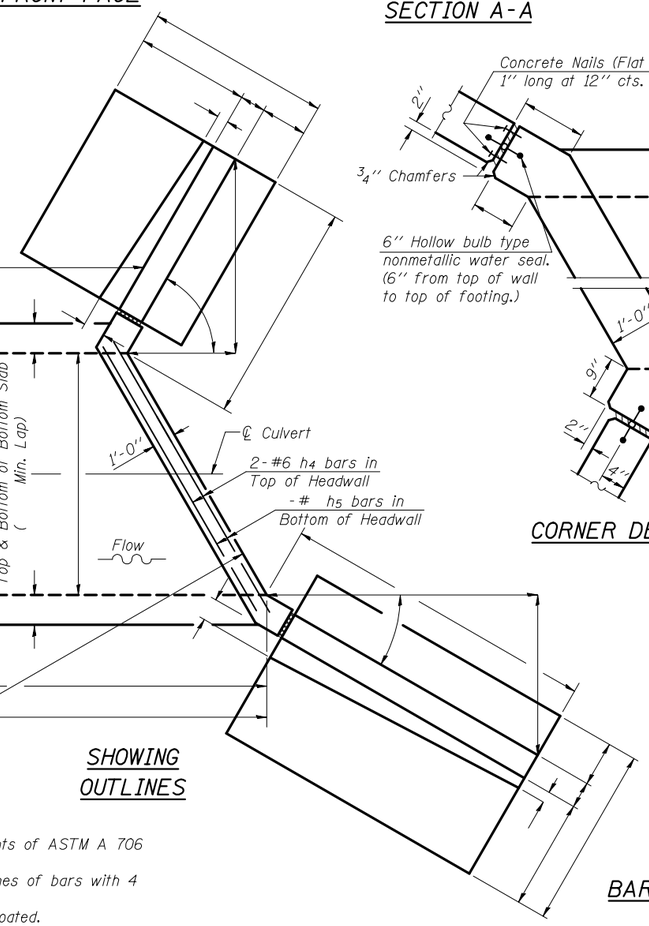

SHOWING REINFORCEMENT

PLAN

SHOWING OUTLINES

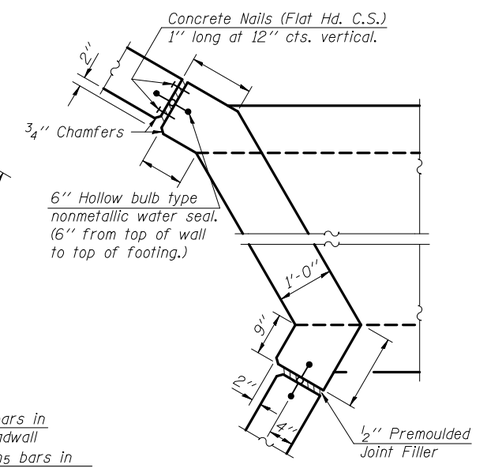

CORNER DETAIL

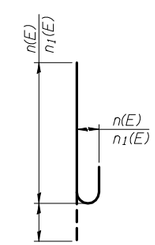

BARS n(E) and n1(E)

BILL OF MATERIAL

Bar	No.	Size	Length	Shape
a1				
a2		#4		
d		#4	5'-6"	
h				
h1				
h2				
h3		#4		
h4		#6		
h5				
h6		#4		
n(E)				
n1(E)				
t				
v				
v1				
v2				
v3				
v4				
v5				
v6				
v7				
w		#5		
w1		#5		
Concrete Box Culverts			Cu. Yd.	
Reinforcement Bars, Epoxy Coated			Pound	
Reinforcement Bars			Pound	

NOTES

Reinforcement bars shall conform to the requirements of ASTM A 706 Gr 60. See Special Provisions.

Bars indicated thus 12 x 4-#5 etc. indicates 12 lines of bars with 4 lengths per line.

Reinforcement bars designated (E) shall be epoxy coated.

SSB-T2-L 7-1-10

FILE NAME =	USER NAME =	DESIGNED -	REVISED -
		CHECKED -	REVISED -
	PLOT SCALE =	DRAWN -	REVISED -
	PLOT DATE =	CHECKED -	REVISED -

STATE OF ILLINOIS
DEPARTMENT OF TRANSPORTATION

SHEET NO. OF SHEETS

F.A. RTE.	SECTION	COUNTY	TOTAL SHEETS	SHEET NO.

CONTRACT NO.

ILLINOIS FED. AID PROJECT

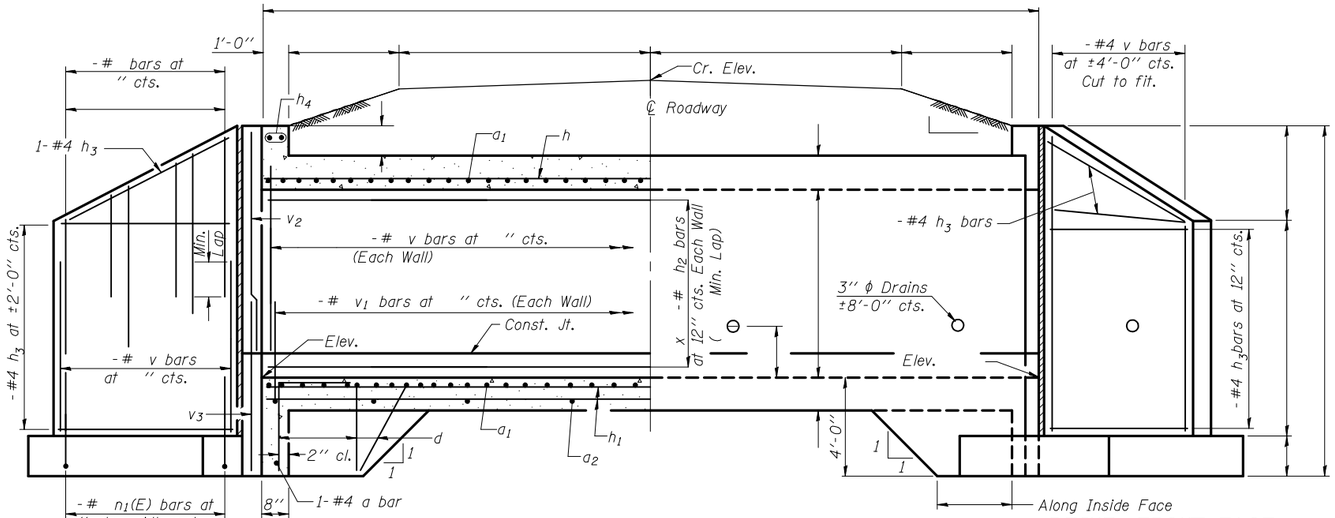

REINF.-BACK FACE

HALF LONG. SECTION

HALF ELEVATION

REINF.-FRONT FACE

BAR a1

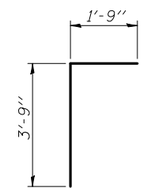

BAR d

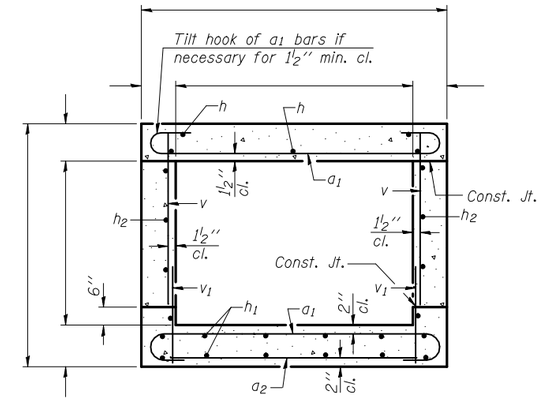

SECTION THRU BARREL

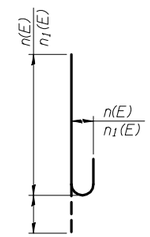

BARS n(E) and n1(E)

DESIGN STRESSES

fy = 60,000 psi
f'c = 3,500 psi

Max. Soil Pressure under footing = psf

LOADING HS 20-44 & ALT.

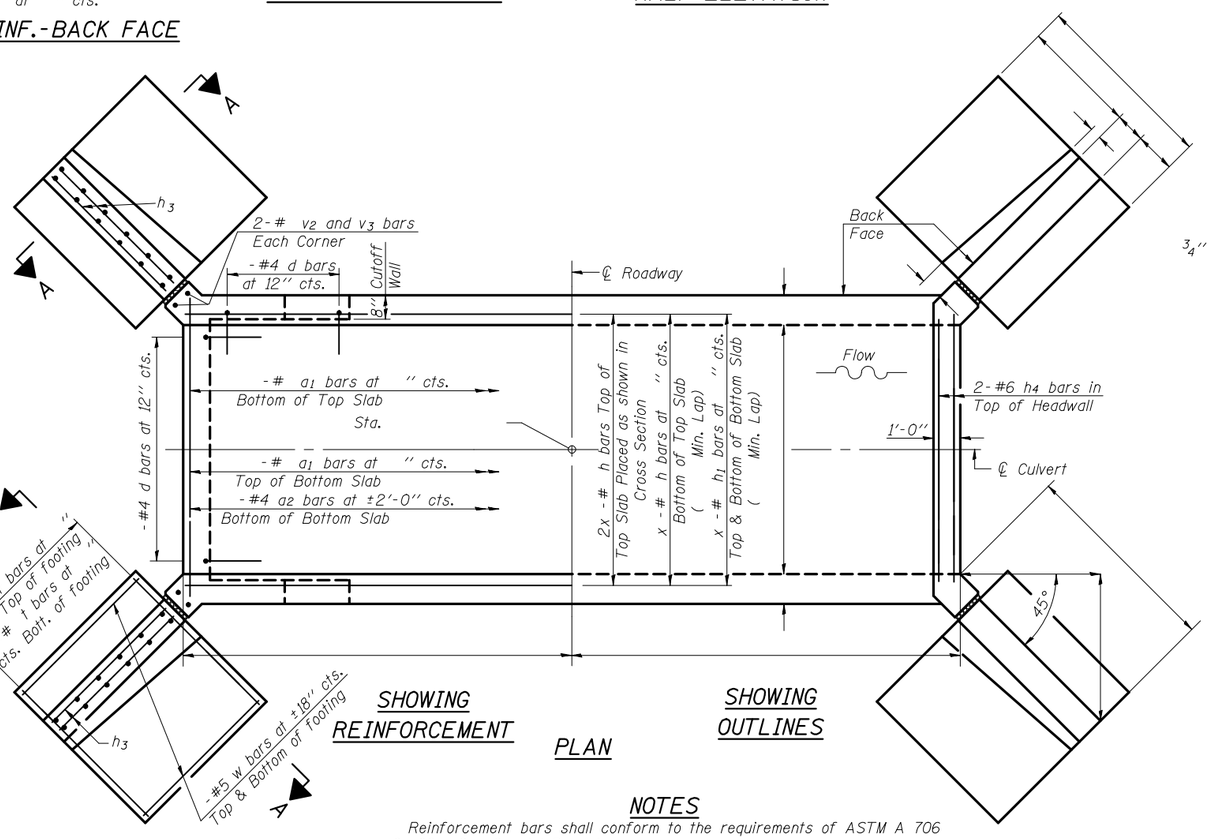

SHOWING REINFORCEMENT

PLAN

SHOWING OUTLINES

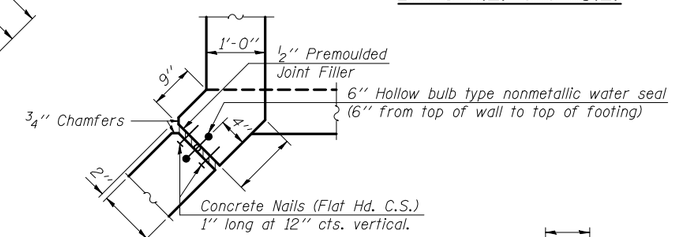

CORNER DETAIL

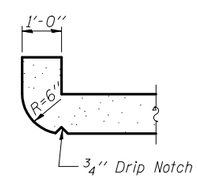

SECTION THRU HEADWALL

(Up Stream End Only)

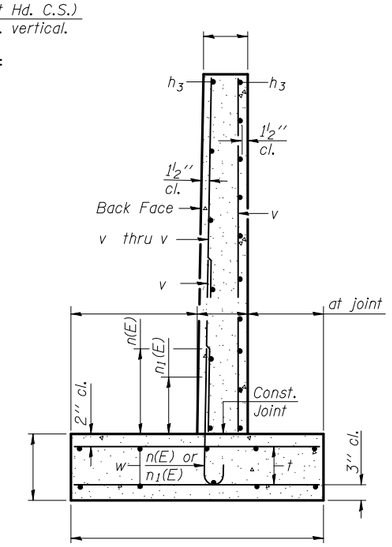

SECTION A-A

BILL OF MATERIAL

Bar	No.	Size	Length	Shape
a1				
a2		#4		
d		#4	5'-6"	
h				
h1				
h2				
h3		#4		
h4		#6		
n(E)				
n1(E)				
t				
v				
v1				
v2				
v3				
v4				
v5				
v6				
v7				
w		#5		
Concrete Box Culverts			Cu. Yd.	
Reinforcement Bars, Epoxy Coated			Pound	
Reinforcement Bars			Pound	

NOTES

Reinforcement bars shall conform to the requirements of ASTM A 706 Gr 60. See Special Provisions.

Bars indicated thus 12 x 4-#5 etc. indicates 12 lines of bars with 4 lengths per line.

Reinforcement bars designated (E) shall be epoxy coated.

SSB-T2-0 7-1-10

FILE NAME =	USER NAME =	DESIGNED -	REVISED -	STATE OF ILLINOIS DEPARTMENT OF TRANSPORTATION	SHEET NO. OF SHEETS	F.A. RTE.	SECTION	COUNTY	TOTAL SHEETS	SHEET NO.
		CHECKED -	REVISED -							
	PLOT SCALE =	DRAWN -	REVISED -					CONTRACT NO.		
	PLOT DATE =	CHECKED -	REVISED -				ILLINOIS	FED. AID PROJECT		

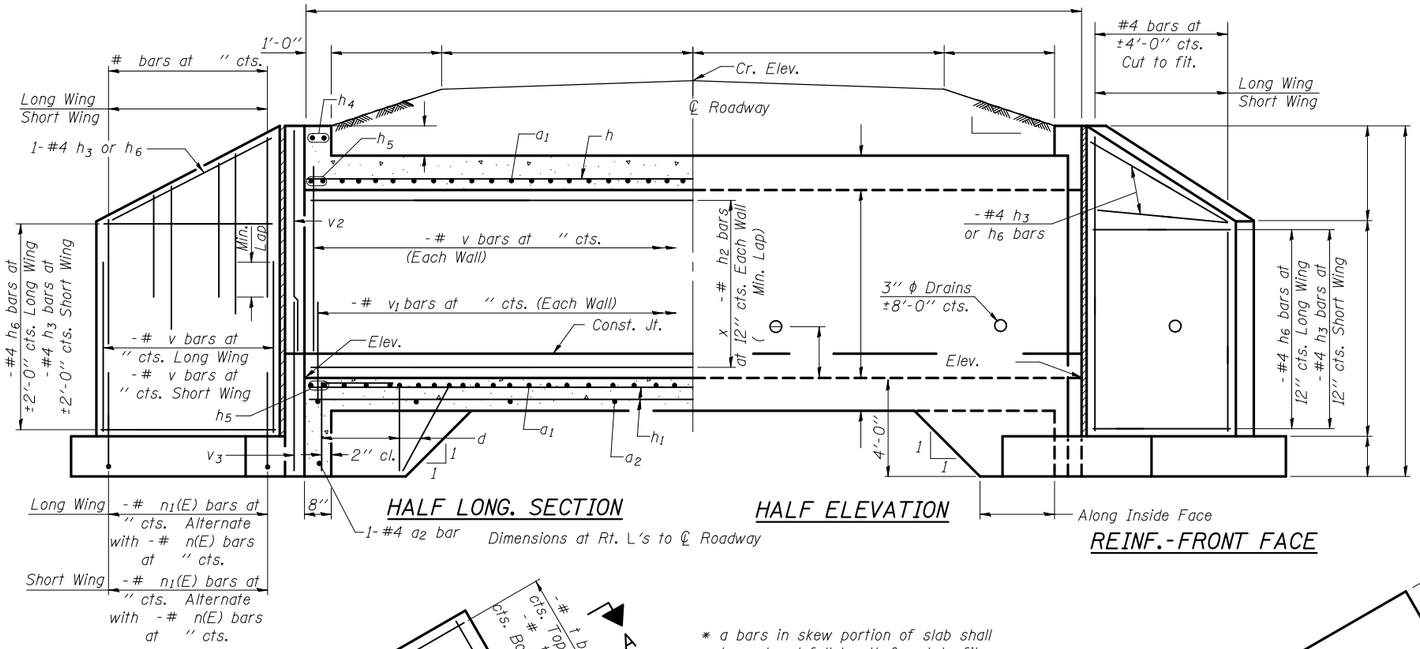

HALF LONG. SECTION

Dimensions at Rt. L's to ℄ Roadway

HALF ELEVATION

REINF.-FRONT FACE

REINF.-BACK FACE

BAR a1

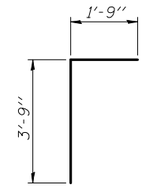

BAR d

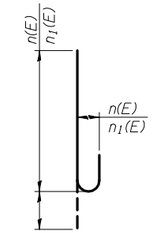

BARS n(E) and n1(E)

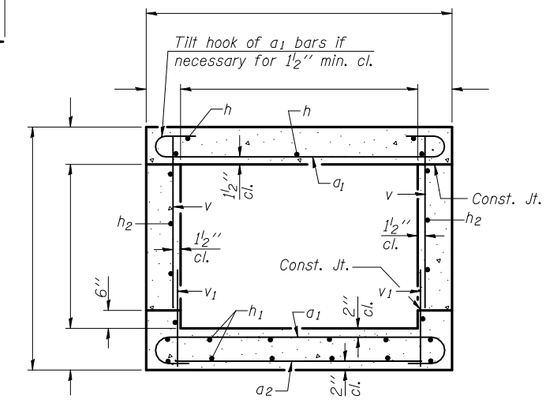

SECTION THRU BARREL

DESIGN STRESSES

fy = 60,000 psi
f'c = 3,500 psi

Max. Soil Pressure under footing = psf

LOADING HS 20-44 & ALT.

BILL OF MATERIAL

Bar	No.	Size	Length	Shape
a1				
a2		#4		
d		#4	5'-6"	
h				
h1				
h2				
h3		#4		
h4		#6		
h5				
h6		#4		
n(E)				
n1(E)				
t				
v				
v1				
v2				
v3				
v4				
v5				
v6				
v7				
w		#5		
w1		#5		
Concrete Box Culverts			Cu. Yd.	
Reinforcement Bars, Epoxy Coated			Pound	
Reinforcement Bars			Pound	

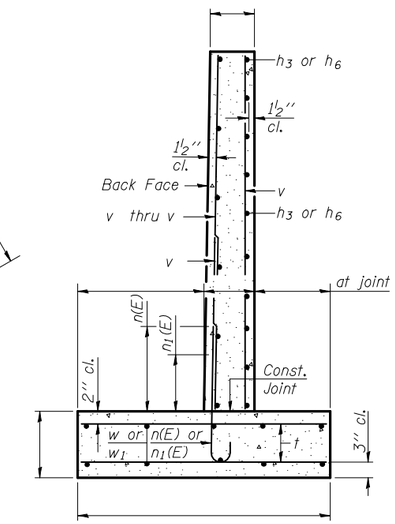

SECTION A-A

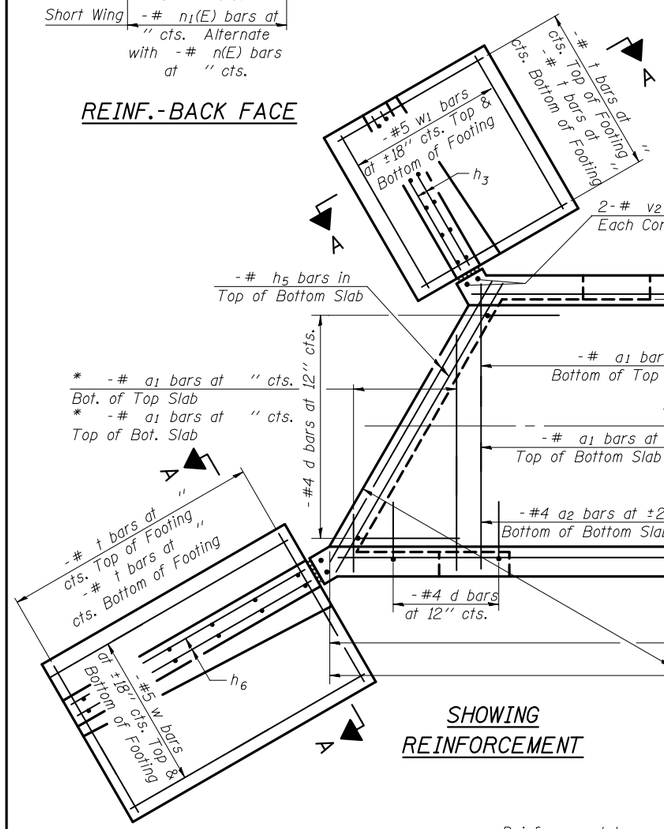

SHOWING REINFORCEMENT

* a bars in skew portion of slab shall be ordered full length & cut to fit. Balance of bar to be used in opposite end of culvert.

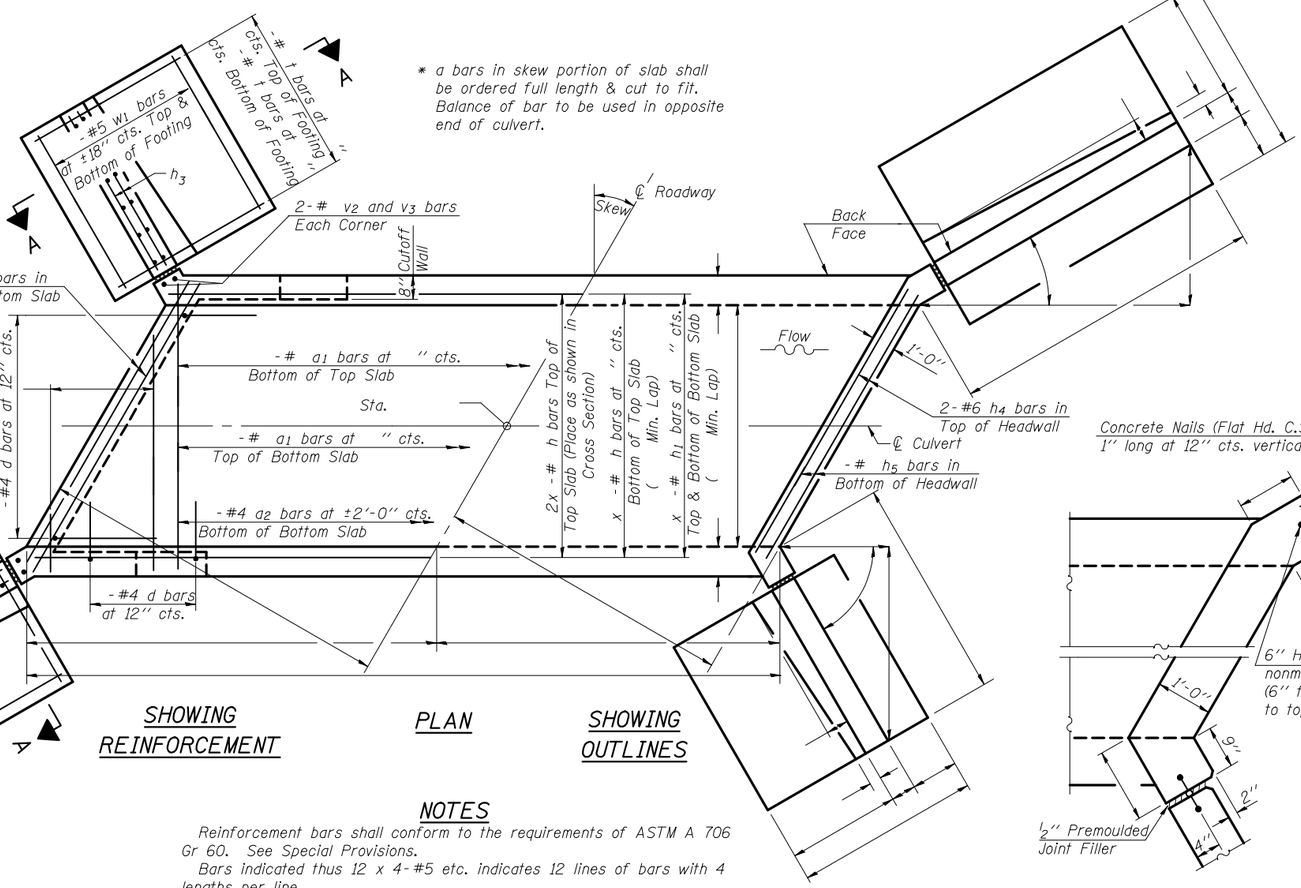

PLAN

SHOWING OUTLINES

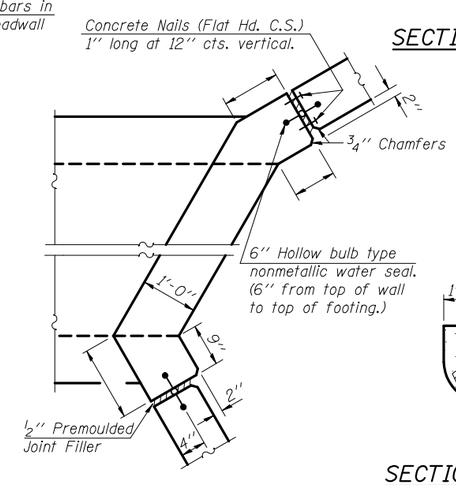

CORNER DETAIL

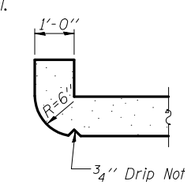

SECTION THRU HEADWALL

(Up Stream End Only)

NOTES

Reinforcement bars shall conform to the requirements of ASTM A 706 Gr 60. See Special Provisions.

Bars indicated thus 12 x 4-#5 etc. indicates 12 lines of bars with 4 lengths per line.

Reinforcement bars designated (E) shall be epoxy coated.

SSB-T2-R 7-1-10

FILE NAME =	USER NAME =	DESIGNED -	REVISED -
		CHECKED -	REVISED -
	PLOT SCALE =	DRAWN -	REVISED -
	PLOT DATE =	CHECKED -	REVISED -

STATE OF ILLINOIS
DEPARTMENT OF TRANSPORTATION

SHEET NO. OF SHEETS

F.A. RTE.	SECTION	COUNTY	TOTAL SHEETS	SHEET NO.

CONTRACT NO.

ILLINOIS FED. AID PROJECT