CELL / MODEL NAME	DESCRIPTION	DATE
TSA-SB-LT-LS	2 rows of reinf in top slab; 1 row of reinf in each sidewall; L-Type Wingwalls, Left Skew	10/15/2016
TSA-SB-LT-RS	2 rows of reinf in top slab; 1 row of reinf in each sidewall; L-Type Wingwalls, Right Skew	10/15/2016
TSA-SB-LT-ZS	2 rows of reinf in top slab; 1 row of reinf in each sidewall; L-Type Wingwalls, Zero Skew	10/15/2016
TSA-SC-LT-LS	2 rows of reinf in top slab; 2 rows of reinf in each sidewall; L-Type Wingwalls, Left Skew	10/15/2016
TSA-SC-LT-RS	2 rows of reinf in top slab; 2 rows of reinf in each sidewall; L-Type Wingwalls, Right Skew	10/15/2016
TSA-SC-LT-ZS	2 rows of reinf in top slab; 2 rows of reinf in each sidewall; L-Type Wingwalls, Zero Skew	10/15/2016
TSB-SB-LT-LS	1 row of reinf in top slab; 1 row of reinf in each sidewall; L-Type Wingwalls, Left Skew	10/15/2016
TSB-SB-LT-RS	1 row of reinf in top slab; 1 row of reinf in each sidewall; L-Type Wingwalls, Right Skew	10/15/2016
TSB-SB-LT-ZS	1 row of reinf in top slab; 1 row of reinf in each sidewall; L-Type Wingwalls, Zero Skew	10/15/2016
TSB-SC-LT-LS	1 row of reinf in top slab; 2 rows of reinf in each sidewall; L-Type Wingwalls, Left Skew	10/15/2016
TSB-SC-LT-RS	1 row of reinf in top slab; 2 rows of reinf in each sidewall; L-Type Wingwalls, Right Skew	10/15/2016
TSB-SC-LT-ZS	1 row of reinf in top slab; 2 rows of reinif in each sidewall; L-Type Wingwalls, Zero Skew	10/15/2016

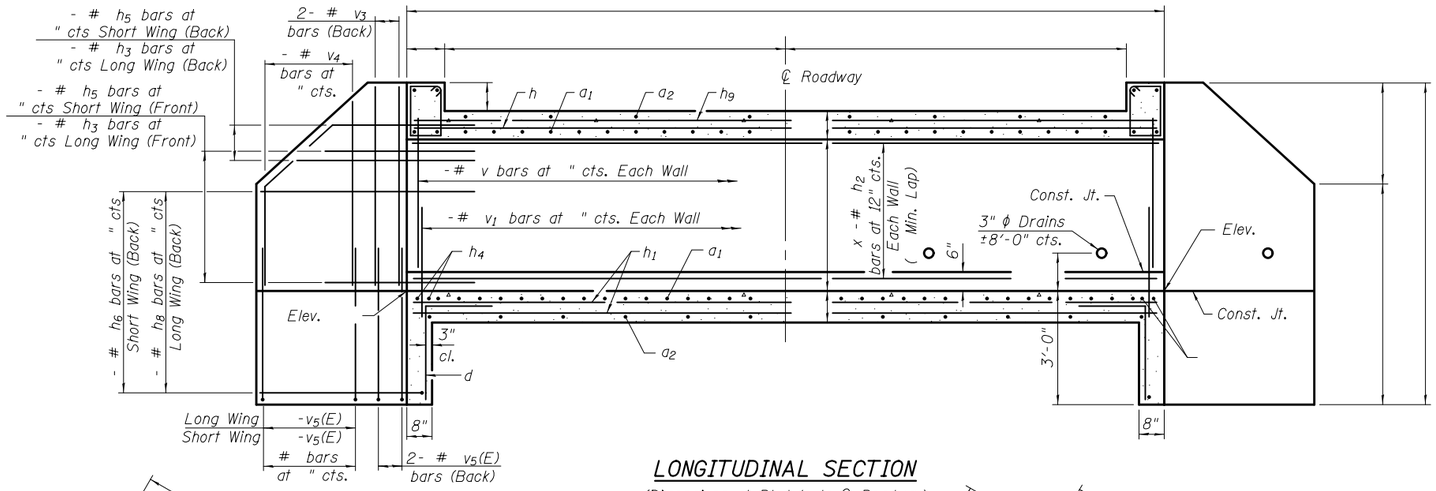

LONGITUDINAL SECTION

(Dimensions at Rt. L's to ℄ Roadway)

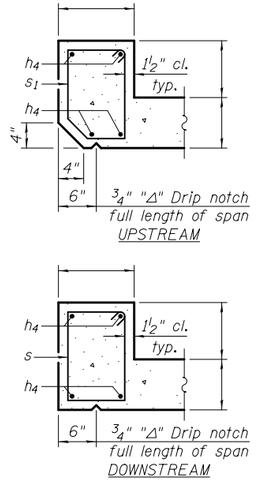

SECTION THRU HEADWALL

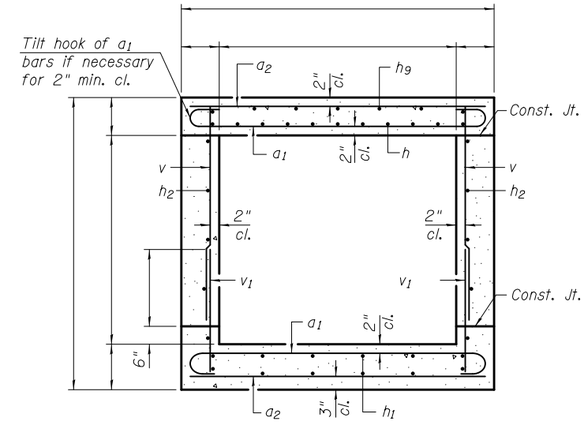

SECTION THRU BARREL

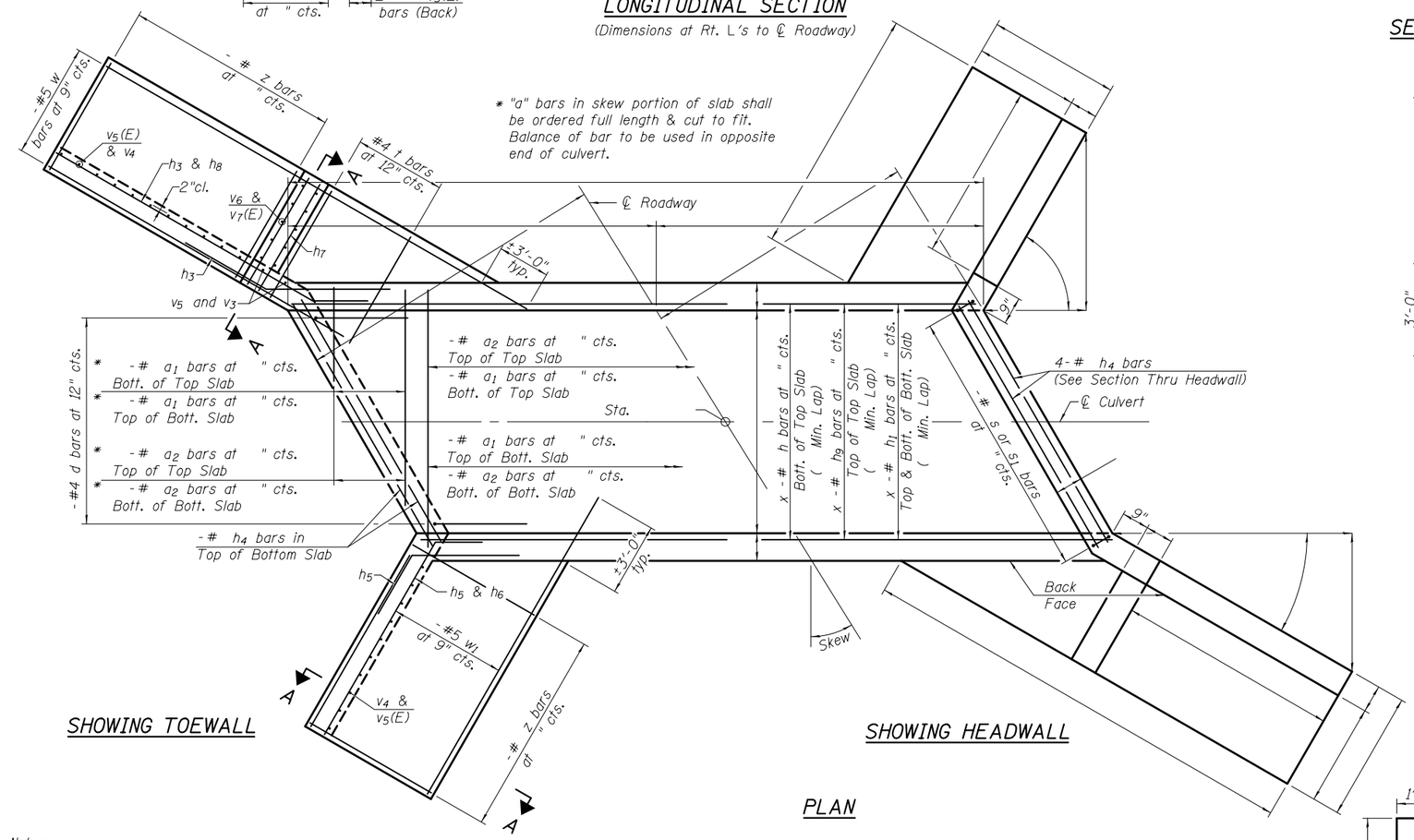

SHOWING TOEWALL

SHOWING HEADWALL

PLAN

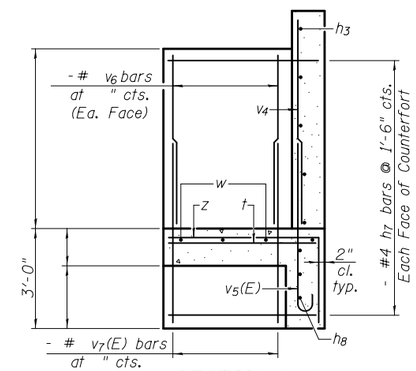

SECTION A-A

Showing long wing with counterfort. Omit counterfort at short wing.

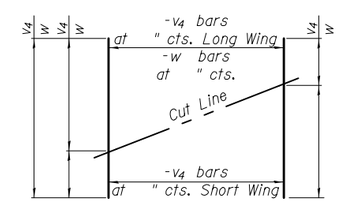

FIELD CUTTING DIAGRAM

Order bars shown full length. Cut as shown and use remainder of bars in opposite wingwall.

BILL OF MATERIAL

Bar	No.	Size	Length	Shape
a1		#		
a2		#		
d		#4	4'-5"	
h		#		
h1		#		
h2		#		
h3		#4		
h4		#		
h5		#		
h6		#		
h7		#		
h8		#		
h9		#		
s		#		
s1		#		
t		#		
v		#		
v1		#		
v3		#		
v4		#		
v5(E)		#		
v6		#		
v7(E)		#		
w		#5		
w1		#5		
z		#		
Concrete Box Culverts			Cu. Yd.	
Reinforcement Bars			Pound	
Reinforcement Bars, Epoxy Coated			Pound	

BAR a1 BAR d BAR s BAR s1 BAR v5(E) BAR z

Notes:

Bars indicated thus 12 x 4-#5 etc. indicates 12 lines of bars with 4 lengths per line.

At the Contractor's option, a longer v_1 bar may be ordered to replace the v bar. No reduction in quantities shall be made for this substitution.

TSA-SB-LT-LS 10-15-2016

FILE NAME =	USER NAME =	DESIGNED -	REVISED	STATE OF ILLINOIS DEPARTMENT OF TRANSPORTATION	CULVERT DETAILS STRUCTURE NO.	F.A. RTE.	SECTION	COUNTY	TOTAL SHEETS	SHEET NO.
		CHECKED -	REVISED							
	PLOT SCALE =	DRAWN -	REVISED					CONTRACT NO.		
	PLOT DATE =	CHECKED -	REVISED		SHEET NO. OF SHEETS		ILLINOIS	FED. AID PROJECT		

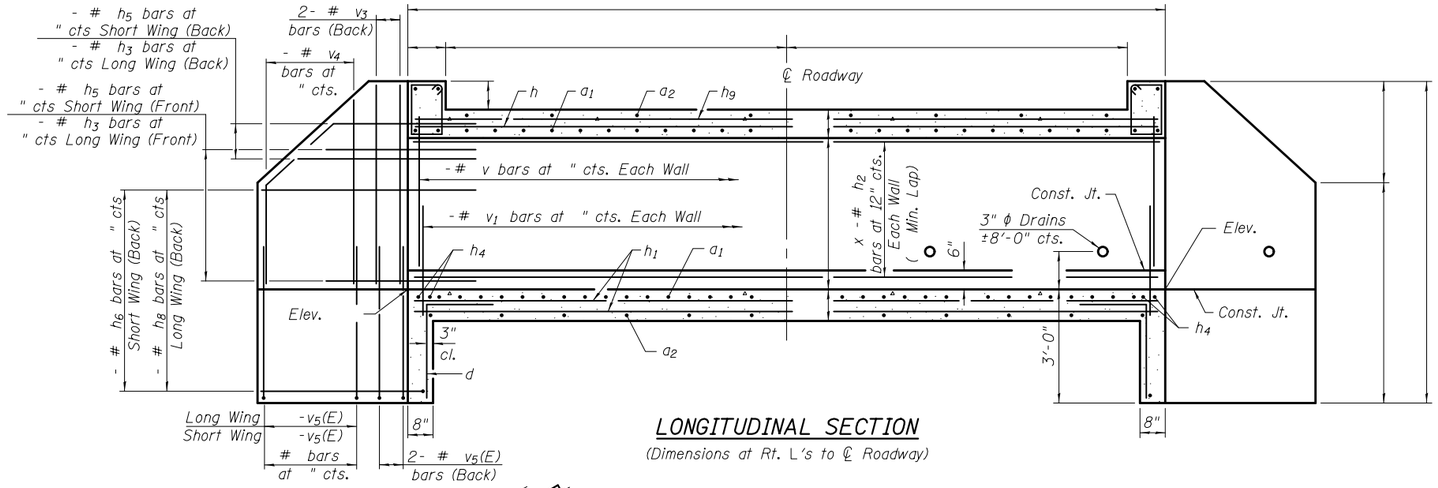

LONGITUDINAL SECTION

(Dimensions at Rt. L's to ℄ Roadway)

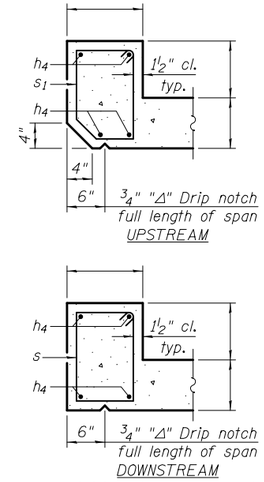

SECTION THRU HEADWALL

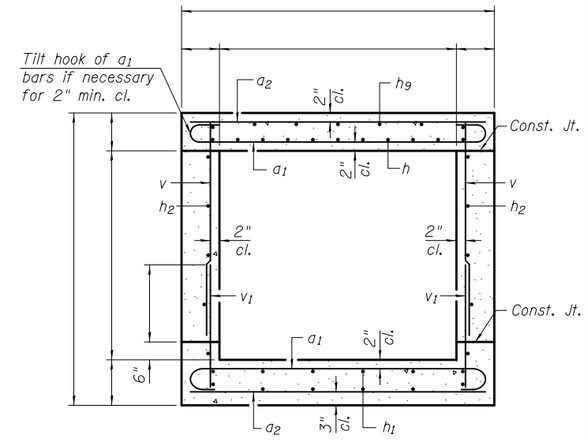

SECTION THRU BARREL

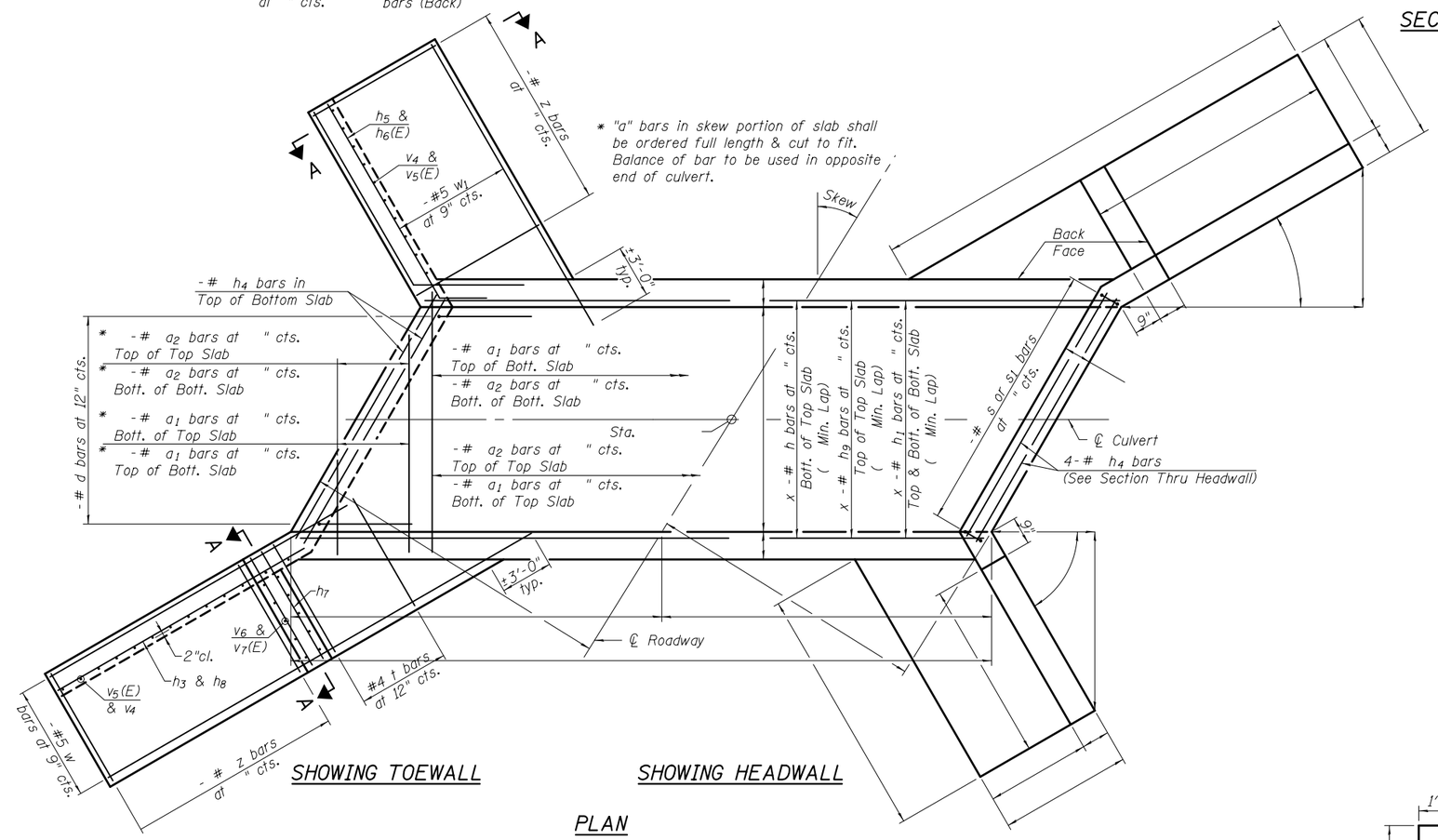

SHOWING TOEWALL

SHOWING HEADWALL

PLAN

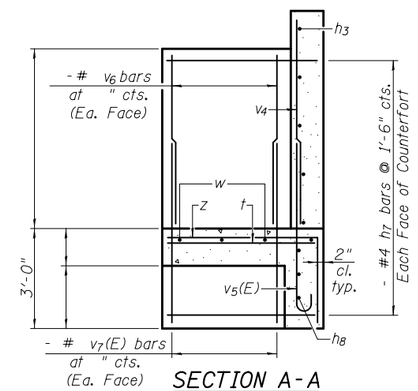

SECTION A-A

Showing long wing with counterfort.
Omit counterfort at short wing.

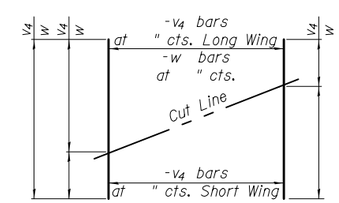

FIELD CUTTING DIAGRAM

Order bars shown full length. Cut as shown and use remainder of bars in opposite wingwall.

BILL OF MATERIAL

Bar	No.	Size	Length	Shape
a1		#		
a2		#		
d		#4	4'-5"	
h		#		
h1		#		
h2		#		
h3		#4		
h4		#		
h5		#		
h6		#		
h7		#		
h8		#		
h9		#		
s		#		
s1		#		
t		#		
v		#		
v1		#		
v3		#		
v4		#		
v5(E)		#		
v6		#		
v7(E)		#		
w		#5		
w1		#5		
z		#		
Concrete Box Culverts		Cu. Yd.		
Reinforcement Bars		Pound		
Reinforcement Bars, Epoxy Coated		Pound		

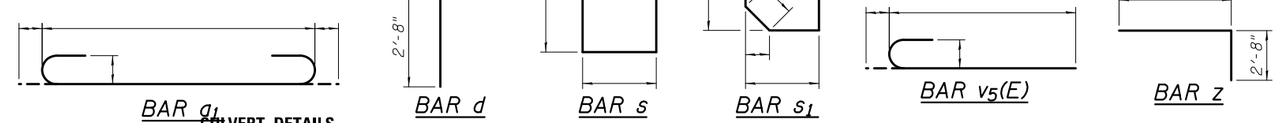

BAR a1 BAR d BAR s BAR s1 BAR v5(E) BAR z

Notes:
Bars indicated thus 12 x 4-#5 etc. indicates 12 lines of bars with 4 lengths per line.
At the Contractor's option, a longer v_1 bar may be ordered to replace the v bar. No reduction in quantities shall be made for this substitution.

TSA-SB-LT-RS 10-15-2016

FILE NAME =	USER NAME =	DESIGNED -	REVISED
		CHECKED -	REVISED
	PLOT SCALE =	DRAWN -	REVISED
	PLOT DATE =	CHECKED -	REVISED

STATE OF ILLINOIS
DEPARTMENT OF TRANSPORTATION

CULVERT DETAILS
STRUCTURE NO.

CULVERT DETAILS
STRUCTURE NO.

SHEET NO. OF SHEETS

F.A. RTE.	SECTION	COUNTY	TOTAL SHEETS	SHEET NO.

CONTRACT NO.

ILLINOIS FED. AID PROJECT

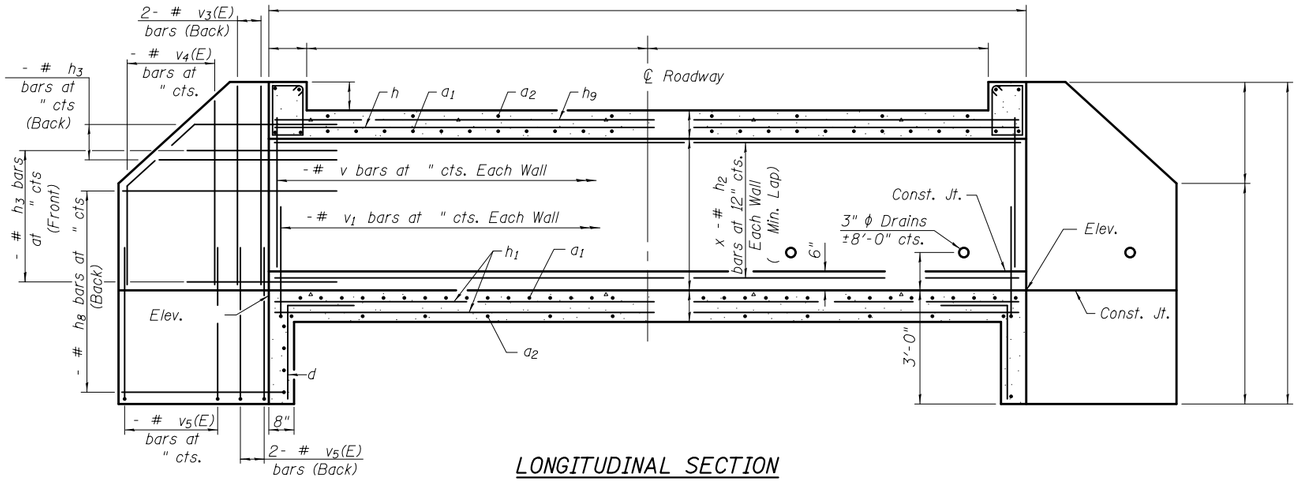

LONGITUDINAL SECTION

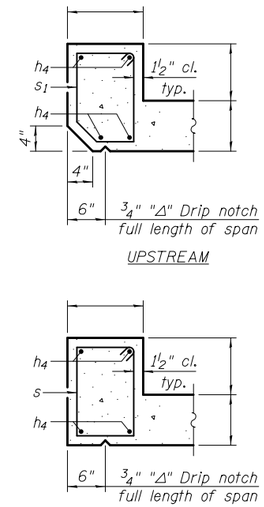

SECTION THRU HEADWALL

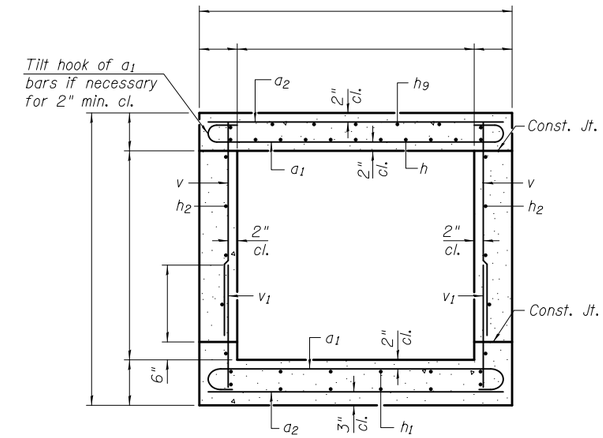

SECTION THRU BARREL

BILL OF MATERIAL

Bar	No.	Size	Length	Shape
a_1		#		
a_2		#		
d		#4	4'-5"	
h		#		
h_1		#		
h_2		#		
h_3		#4		
h_4		#		
h_7		#4		
h_9		#		
s		#		
s_1		#		
t		#		
v		#		
v_1		#		
v_3		#		
v_4		#		
$v_5(E)$		#		
v_6		#		
$v_7(E)$		#		
w		#5		
z		#		
Concrete Box Culverts			Cu. Yd.	
Reinforcement Bars			Pound	
Reinforcement Bars, Epoxy Coated			Pound	

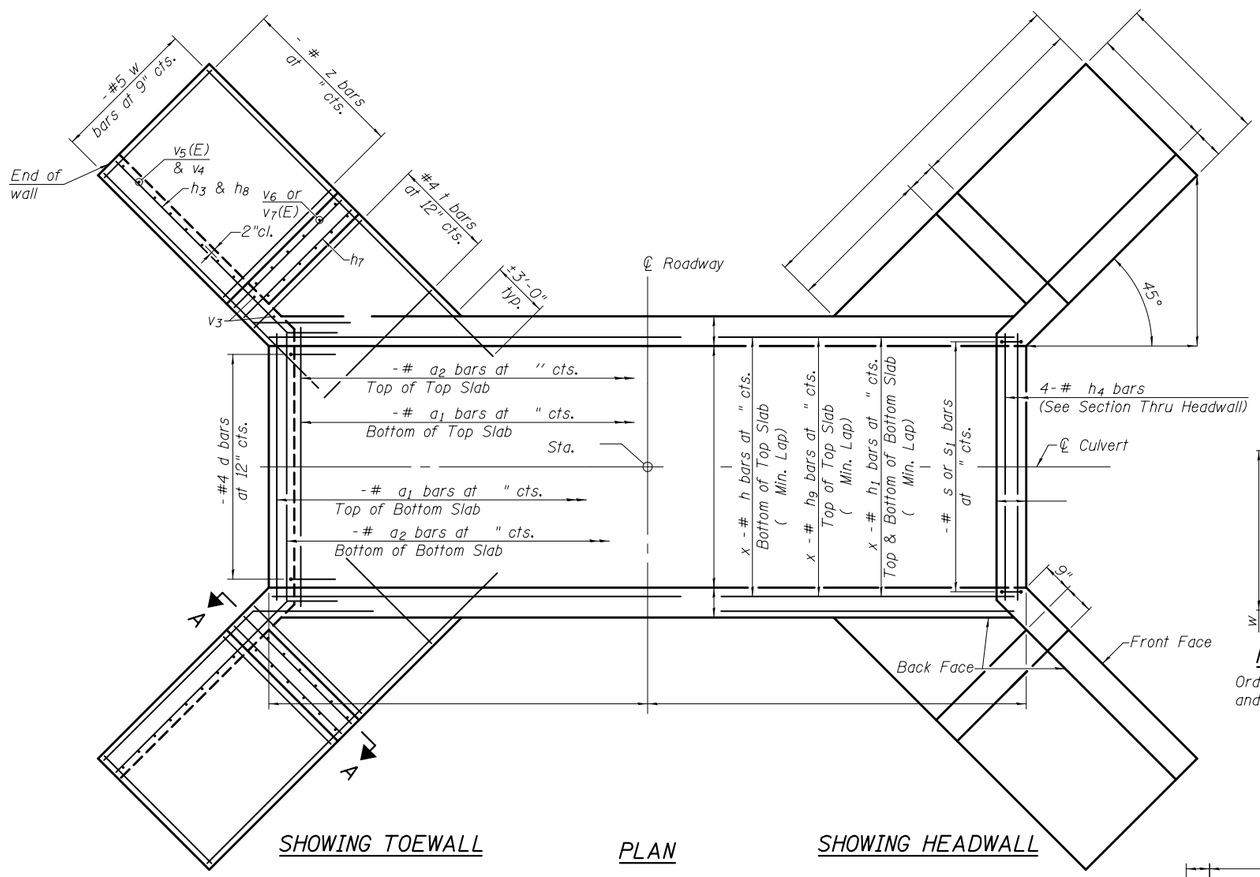

SHOWING TOEWALL

PLAN

SHOWING HEADWALL

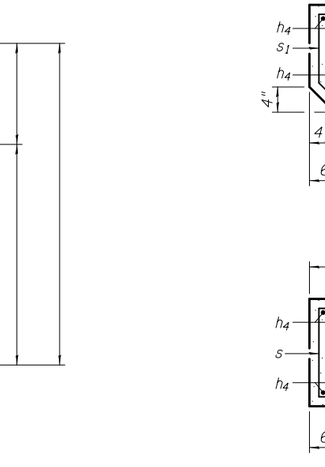

FIELD CUTTING DIAGRAM

Order bars shown full length. Cut as shown and use remainder of bars in opposite wingwall.

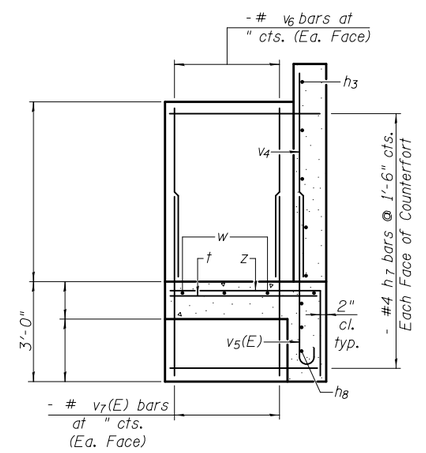

SECTION A-A

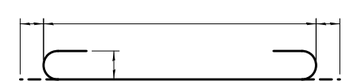

BAR a_1

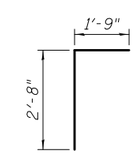

BAR d

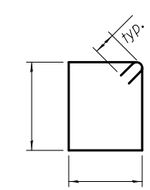

BAR s

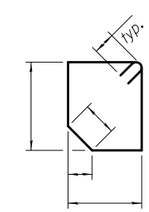

BAR s_1

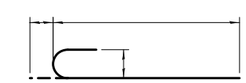

BAR $v_5(E)$

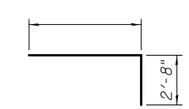

BAR z

Notes:
Bars indicated thus 12 x 4-#5 etc. indicates 12 lines of bars with 4 lengths per line.
At the Contractor's option, a longer v_1 bar may be ordered to replace the v bar. No reduction in quantities shall be made for this substitution.

TSA-SB-LT-ZS 10-15-2016

FILE NAME =	USER NAME =	DESIGNED -	REVISED
		CHECKED -	REVISED
	PLOT SCALE =	DRAWN -	REVISED
	PLOT DATE =	CHECKED -	REVISED

STATE OF ILLINOIS
DEPARTMENT OF TRANSPORTATION

CULVERT DETAILS
STRUCTURE NO.
SHEET NO. OF SHEETS

F.A. RTE.	SECTION	COUNTY	TOTAL SHEETS	SHEET NO.
		CONTRACT NO.		
	ILLINOIS	FED. AID PROJECT		

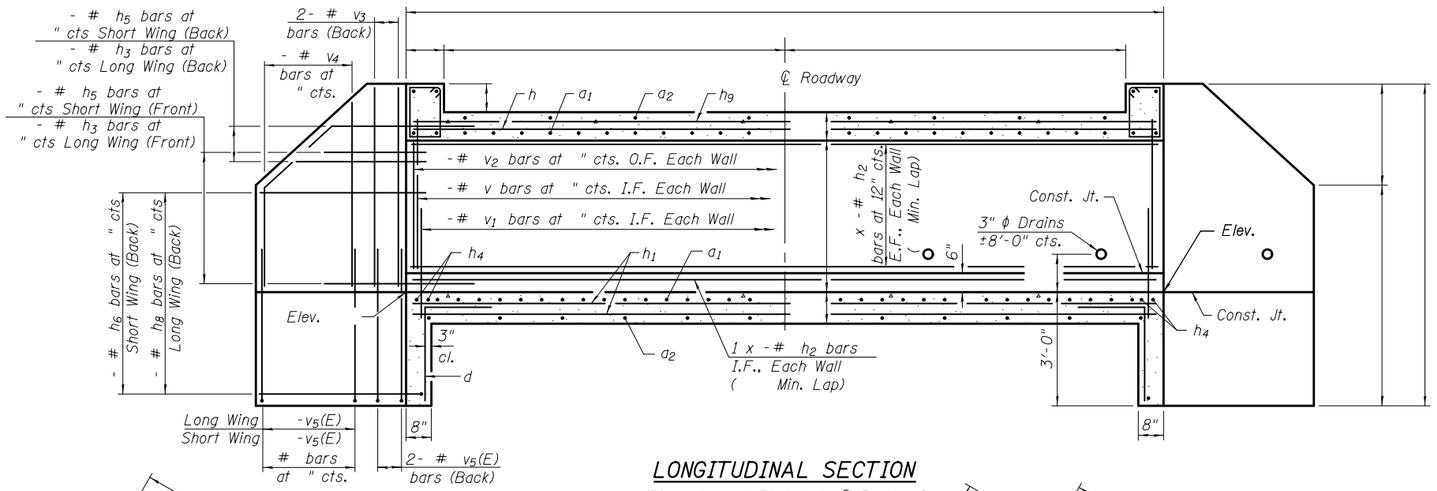

LONGITUDINAL SECTION

(Dimensions at Rt. L's to ℄ Roadway)

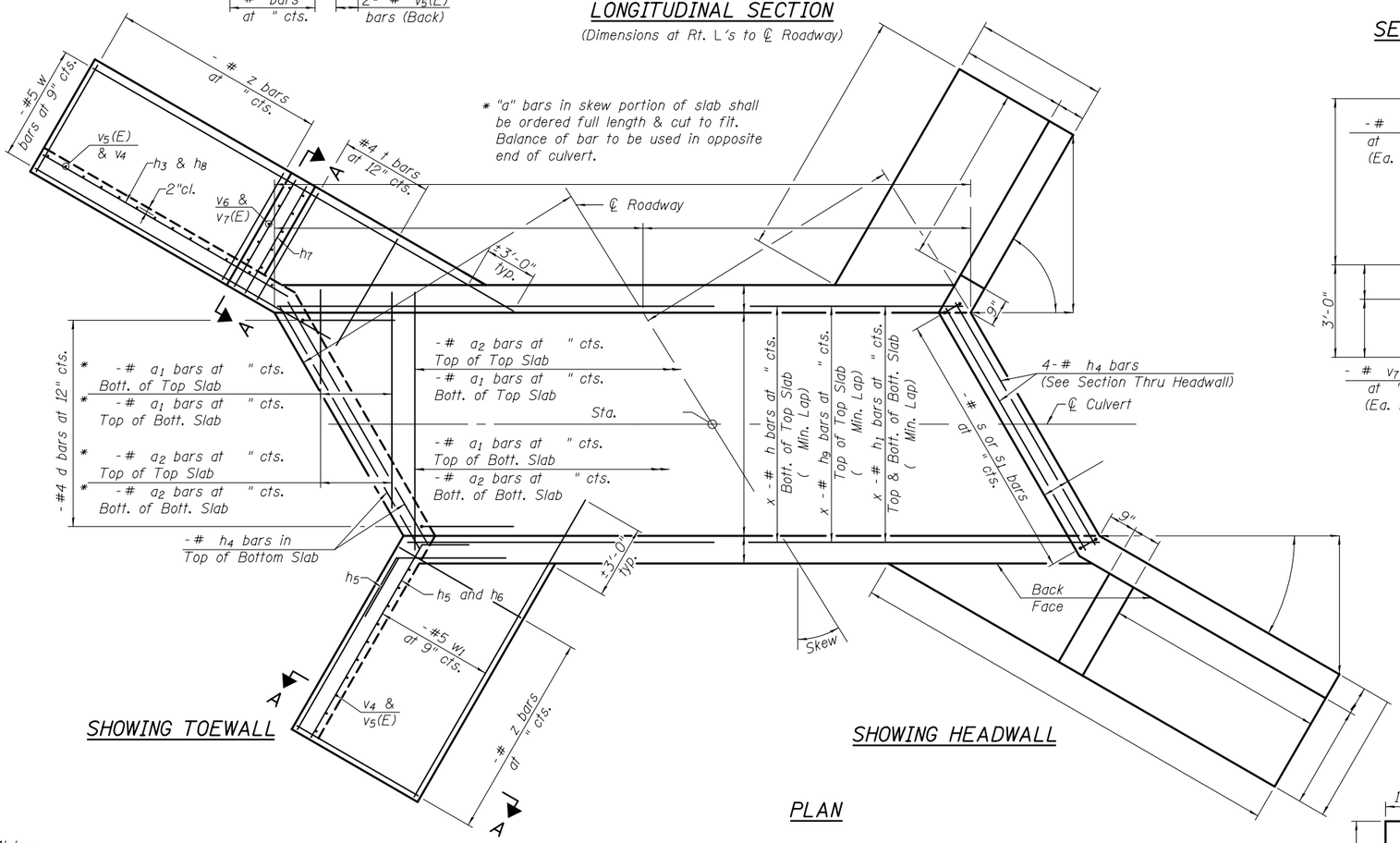

PLAN

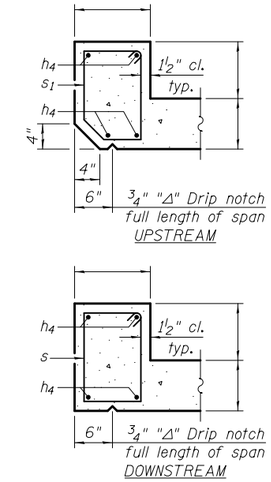

SECTION THRU HEADWALL

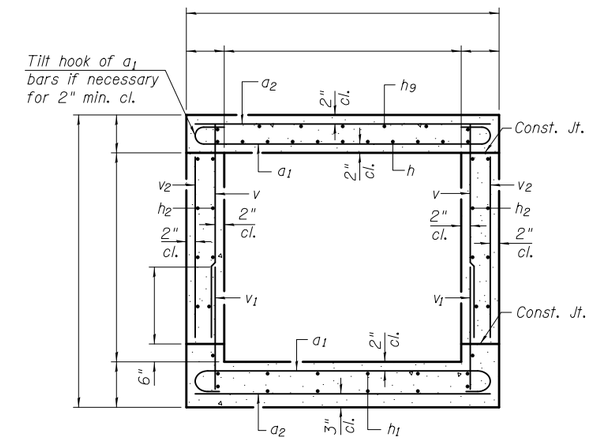

SECTION THRU BARREL

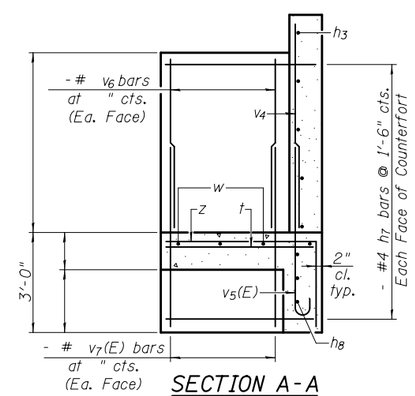

SECTION A-A

Showing long wing with counterfort.
Omit counterfort at short wing.

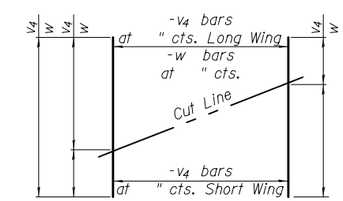

FIELD CUTTING DIAGRAM

Order bars shown full length. Cut as shown and use remainder of bars in opposite wingwall.

BILL OF MATERIAL

Bar	No.	Size	Length	Shape
a1		#		
a2		#		
d		#4	4'-5"	
h		#		
h1		#		
h2		#		
h3		#4		
h4		#		
h5		#		
h6		#		
h7		#		
h8		#		
h9		#		
s		#		
s1		#		
t		#		
v		#		
v1		#		
v3		#		
v4		#		
v5(E)		#		
v6		#		
v7(E)		#		
w		#5		
w1		#5		
z		#		
Concrete Box Culverts			Cu. Yd.	
Reinforcement Bars			Pound	
Reinforcement Bars, Epoxy Coated			Pound	

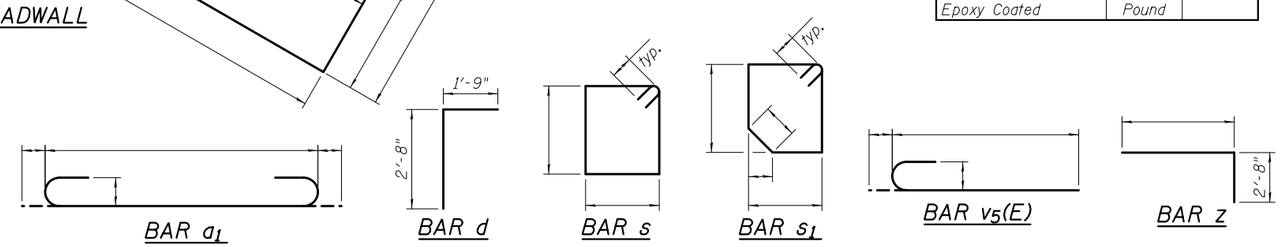

BAR a1 BAR d BAR s BAR s1 BAR v5(E) BAR z

Notes:
Bars indicated thus 12 x 4-#5 etc. indicates 12 lines of bars with 4 lengths per line.
At the Contractor's option, a longer v_1 bar may be ordered to replace the v bar. No reduction in quantities shall be made for this substitution.

TSA-SC-LT-LS 10-15-2016

FILE NAME =	USER NAME =	DESIGNED -	REVISED	STATE OF ILLINOIS DEPARTMENT OF TRANSPORTATION	CULVERT DETAILS STRUCTURE NO.	F.A. RTE.	SECTION	COUNTY	TOTAL SHEETS	SHEET NO.
		CHECKED -	REVISED							
	PLOT SCALE =	DRAWN -	REVISED					CONTRACT NO.		
	PLOT DATE =	CHECKED -	REVISED		SHEET NO. OF SHEETS		ILLINOIS	FED. AID PROJECT		

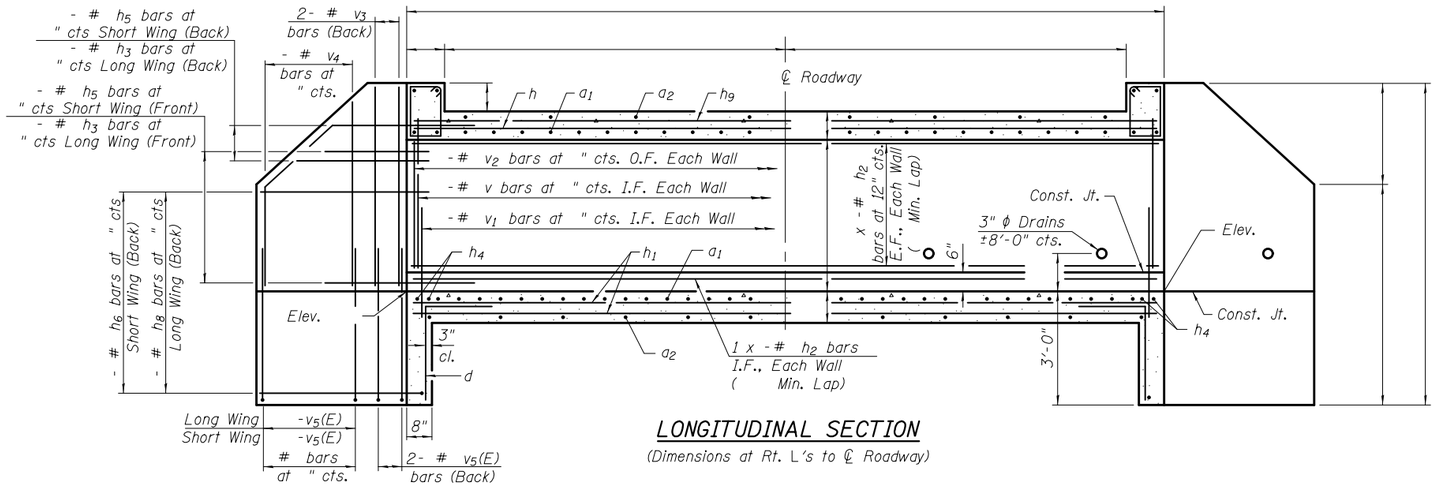

LONGITUDINAL SECTION

(Dimensions at Rt. L's to ℄ Roadway)

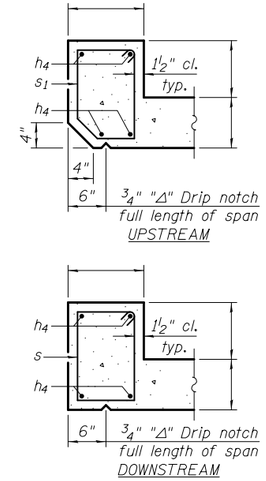

SECTION THRU HEADWALL

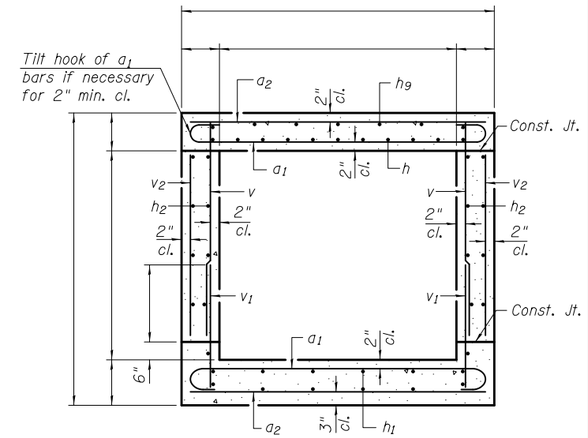

SECTION THRU BARREL

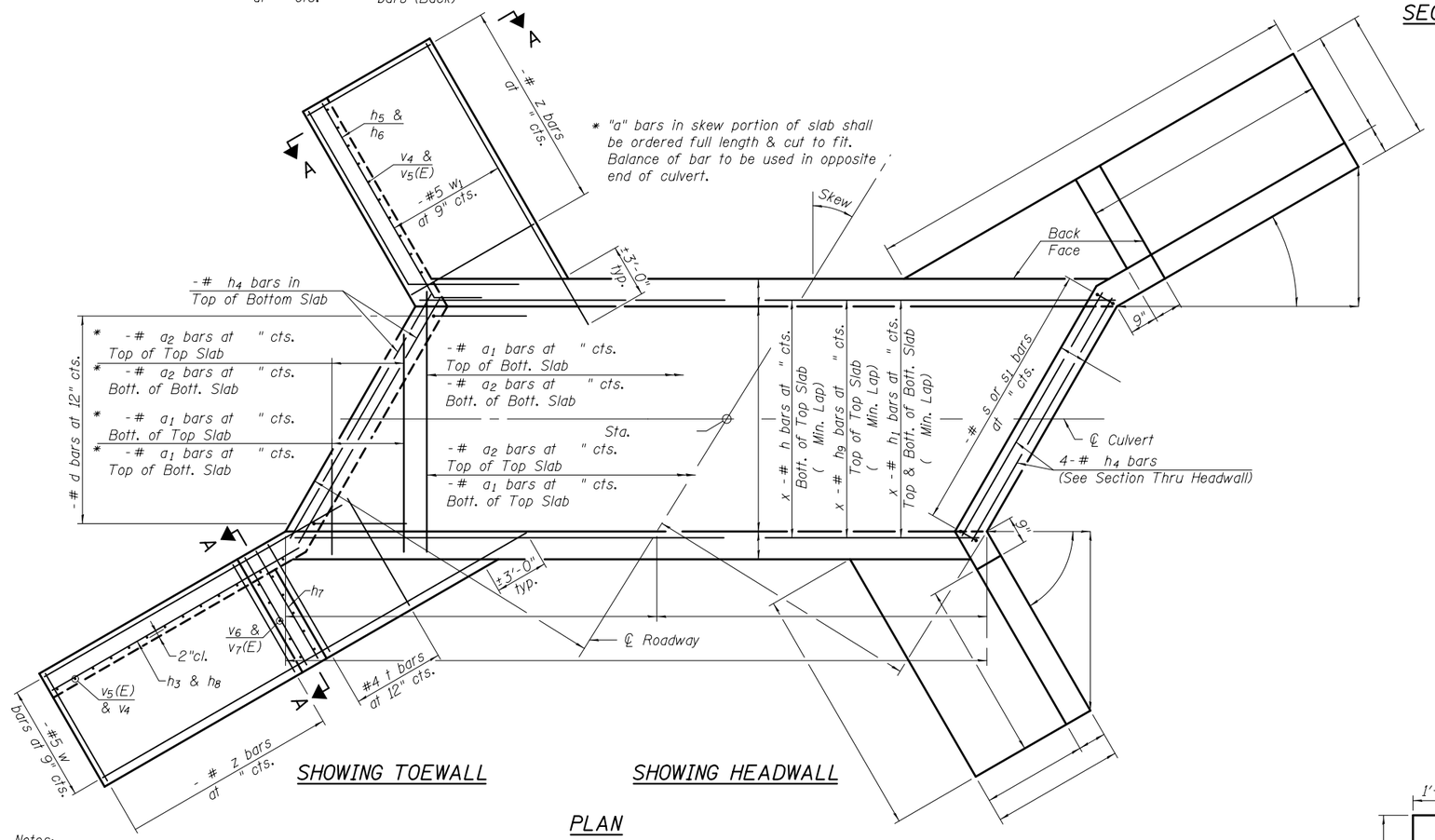

SHOWING TOEWALL

SHOWING HEADWALL

PLAN

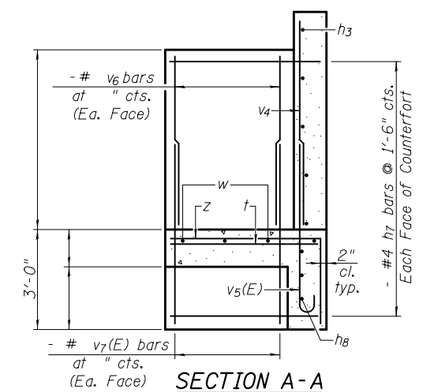

SECTION A-A

Showing long wing with counterfort.
Omit counterfort at short wing.

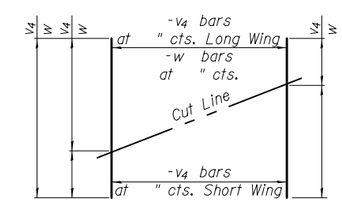

FIELD CUTTING DIAGRAM

Order bars shown full length. Cut as shown and use remainder of bars in opposite wingwall.

BILL OF MATERIAL

Bar	No.	Size	Length	Shape
a1		#		
a2		#		
d		#4	4'-5"	
h		#		
h1		#		
h2		#		
h3		#4		
h4		#		
h5		#		
h6		#		
h7		#		
h8		#		
h9		#		
s		#		
s1		#		
t		#		
v		#		
v1		#		
v3		#		
v4		#		
v5(E)		#		
v6		#		
v7(E)		#		
w		#5		
w1		#5		
z		#		
Concrete Box Culverts			Cu. Yd.	
Reinforcement Bars			Pound	
Reinforcement Bars, Epoxy Coated			Pound	

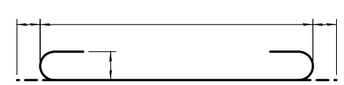

BAR a1

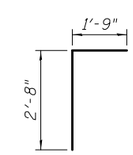

BAR d

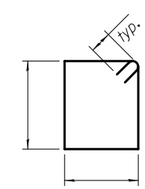

BAR s

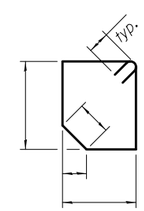

BAR s1

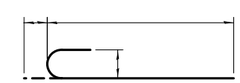

BAR v5(E)

BAR z

Notes:
Bars indicated thus 12 x 4-#5 etc. indicates 12 lines of bars with 4 lengths per line.
At the Contractor's option, a longer v_1 bar may be ordered to replace the v bar. No reduction in quantities shall be made for this substitution.

TSA-SC-LT-RS 10-15-2016

FILE NAME =	USER NAME =	DESIGNED -	REVISED	STATE OF ILLINOIS DEPARTMENT OF TRANSPORTATION	CULVERT DETAILS STRUCTURE NO.	F.A. RTE.	SECTION	COUNTY	TOTAL SHEETS	SHEET NO.
		CHECKED -	REVISED							
	PLOT SCALE =	DRAWN -	REVISED					CONTRACT NO.		
	PLOT DATE =	CHECKED -	REVISED		SHEET NO. OF SHEETS		ILLINOIS	FED. AID PROJECT		

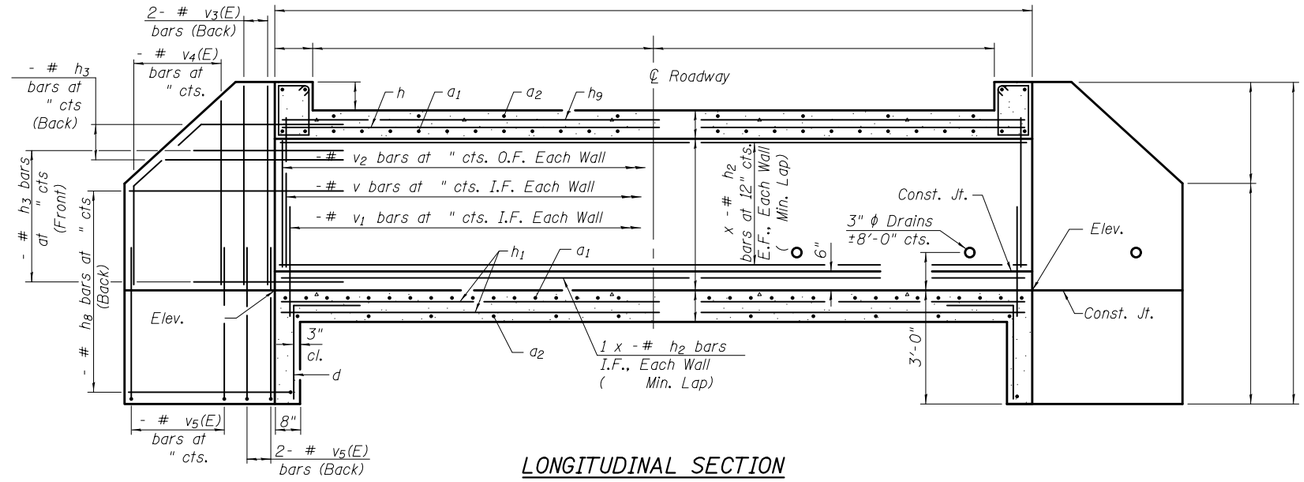

LONGITUDINAL SECTION

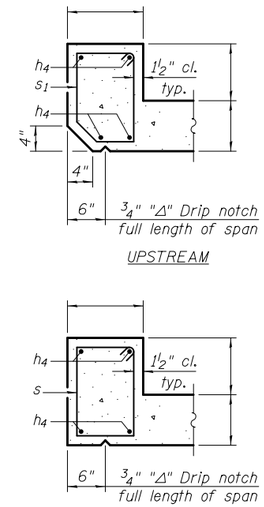

SECTION THRU HEADWALL

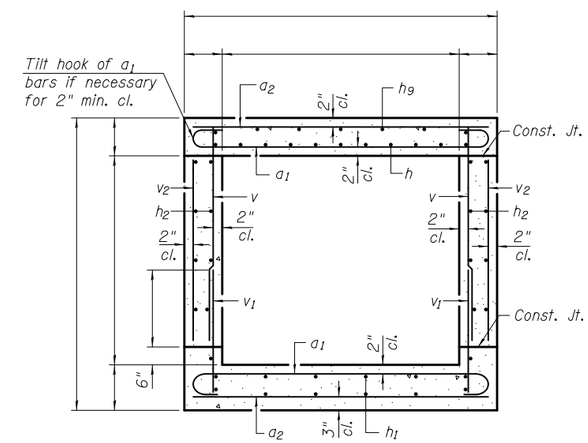

SECTION THRU BARREL

BILL OF MATERIAL

Bar	No.	Size	Length	Shape
a1		#		
a2		#		
d		#4	4'-5"	
h		#		
h1		#		
h2		#		
h3		#4		
h4		#		
h7		#4		
h9		#		
s		#		
s1		#		
t		#		
v		#		
v1		#		
v3		#		
v4		#		
v5(E)		#		
v6		#		
v7(E)		#		
w		#5		
z		#		
Concrete Box Culverts			Cu. Yd.	
Reinforcement Bars			Pound	
Reinforcement Bars, Epoxy Coated			Pound	

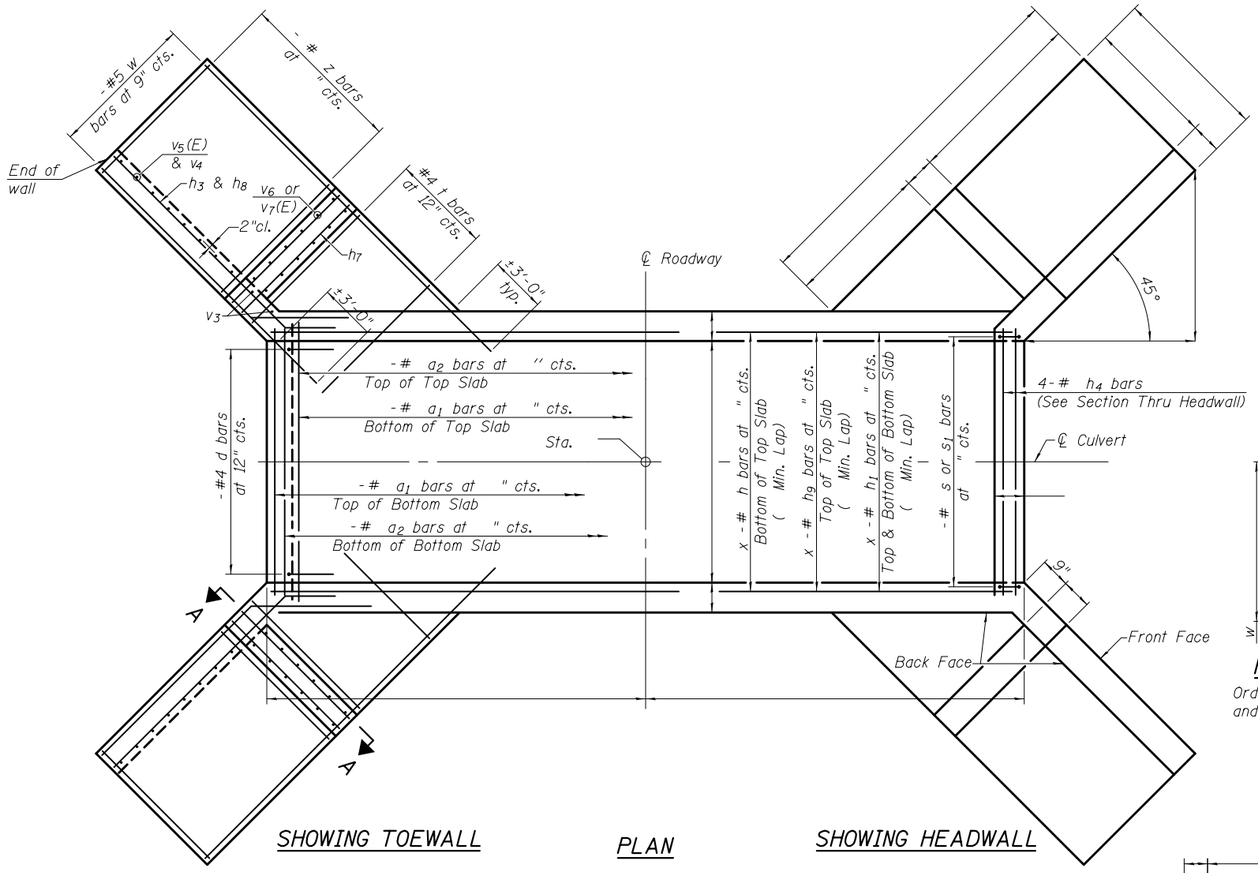

SHOWING TOEWALL

PLAN

SHOWING HEADWALL

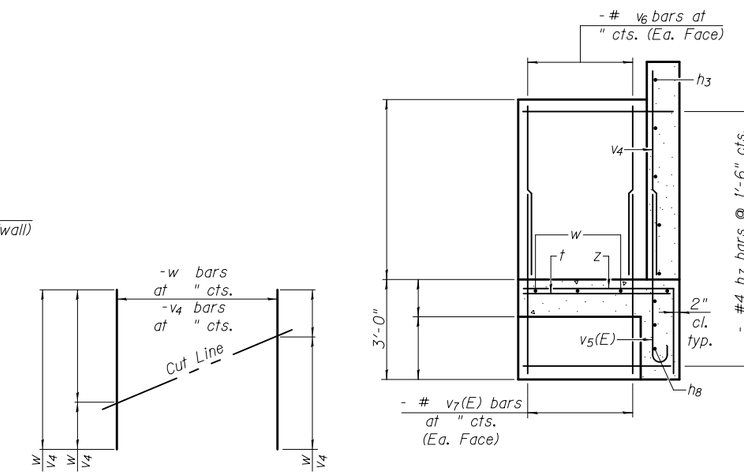

SECTION A-A

FIELD CUTTING DIAGRAM

Order bars shown full length. Cut as shown and use remainder of bars in opposite wingwall.

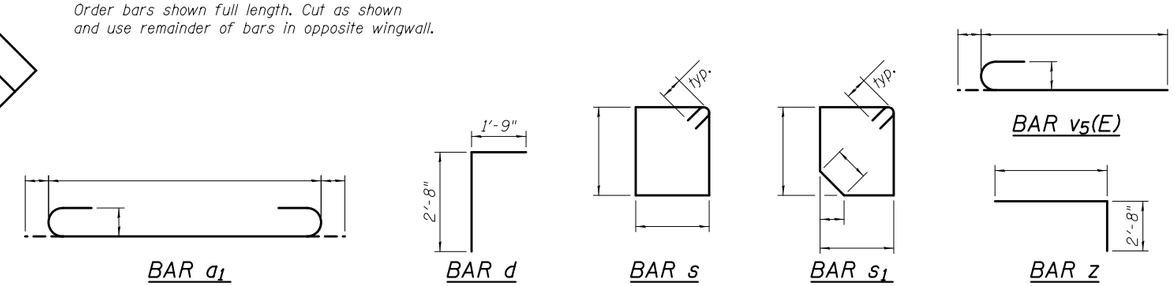

BAR a1 BAR d BAR s BAR s1 BAR v5(E) BAR z

Notes:

Bars indicated thus 12 x 4-#5 etc. indicates 12 lines of bars with 4 lengths per line.

At the Contractor's option, a longer v_1 bar may be ordered to replace the v bar. No reduction in quantities shall be made for this substitution.

TSA-SC-LT-ZS 10-15-2016

FILE NAME =	USER NAME =	DESIGNED -	REVISED	STATE OF ILLINOIS DEPARTMENT OF TRANSPORTATION	CULVERT DETAILS STRUCTURE NO.	F.A. RTE.	SECTION	COUNTY	TOTAL SHEETS	SHEET NO.
		CHECKED -	REVISED							
	PLOT SCALE =	DRAWN -	REVISED					CONTRACT NO.		
	PLOT DATE =	CHECKED -	REVISED		SHEET NO. OF SHEETS		ILLINOIS	FED. AID PROJECT		

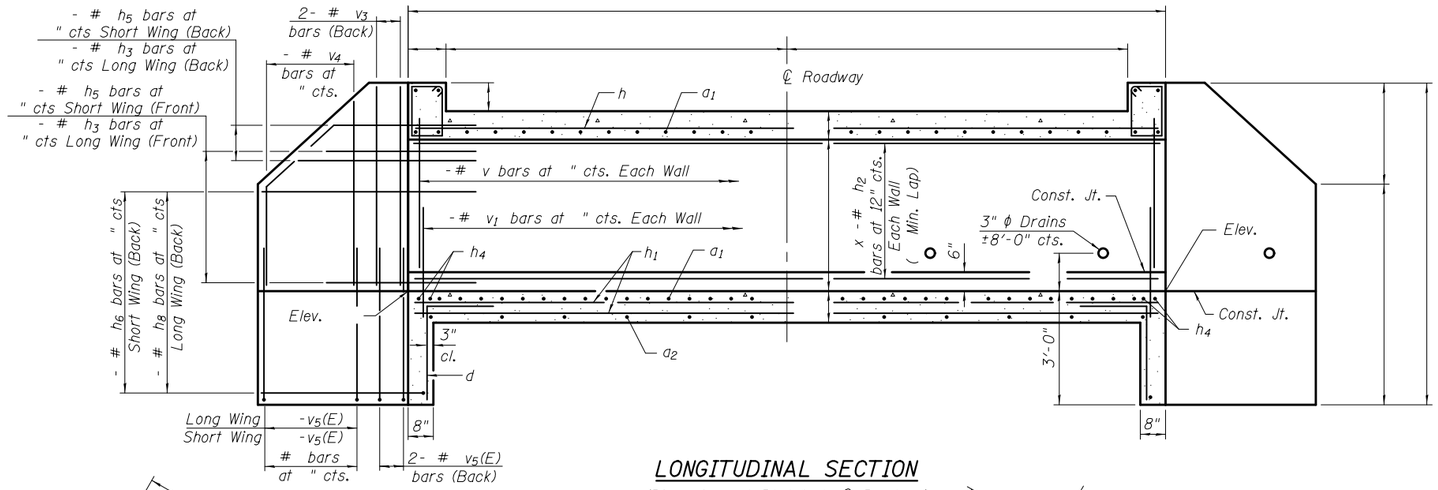

LONGITUDINAL SECTION

(Dimensions at Rt. L's to ℄ Roadway)

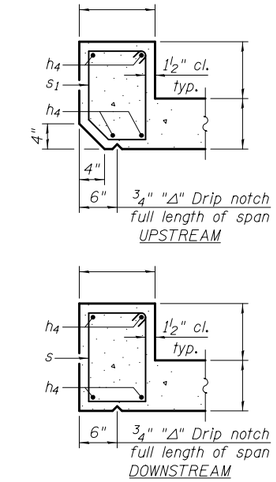

SECTION THRU HEADWALL

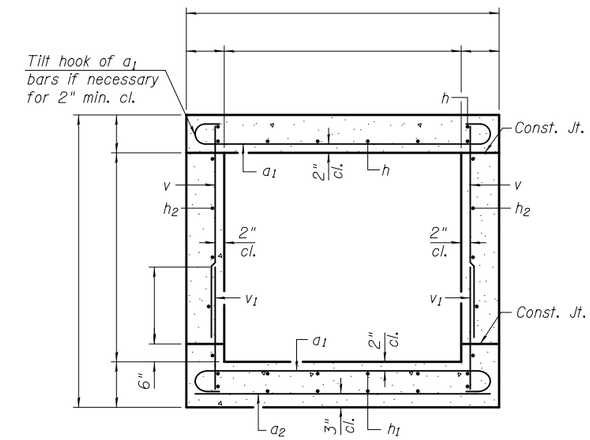

SECTION THRU BARREL

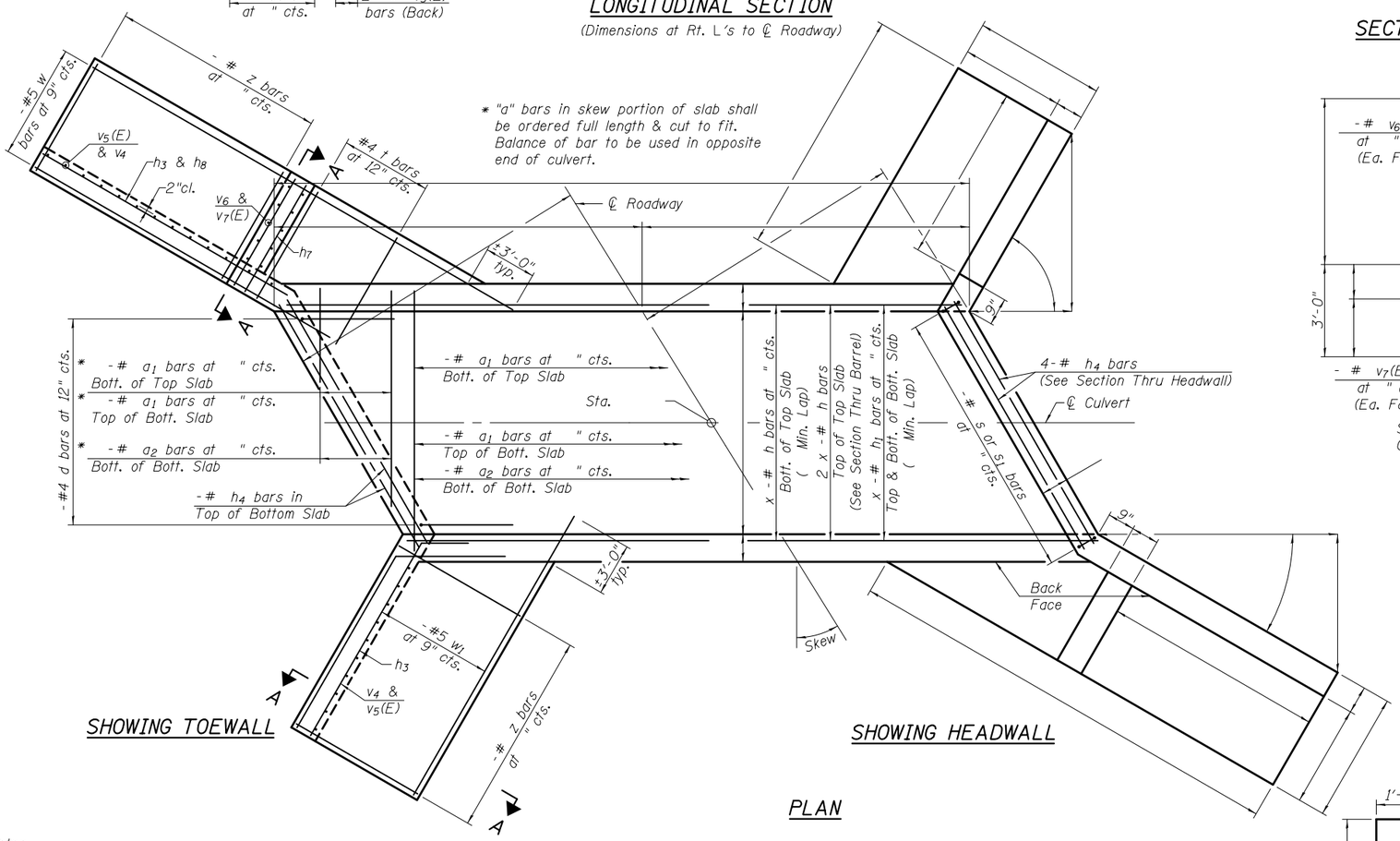

SHOWING TOEWALL

SHOWING HEADWALL

PLAN

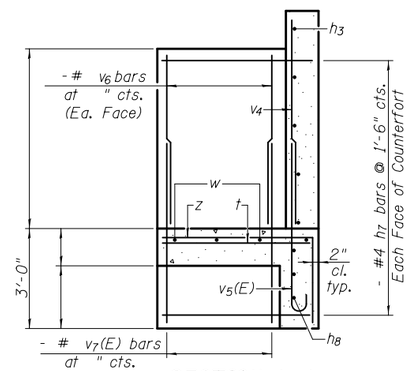

SECTION A-A

Showing long wing with counterfort. Omit counterfort at short wing.

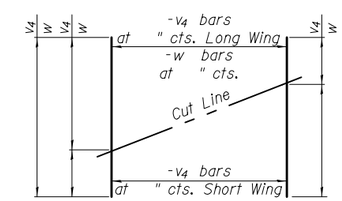

FIELD CUTTING DIAGRAM

Order bars shown full length. Cut as shown and use remainder of bars in opposite wingwall.

BILL OF MATERIAL

Bar	No.	Size	Length	Shape
a1		#		
a2		#		
d		#4	4'-5"	
h		#		
h1		#		
h2		#		
h3		#4		
h4		#		
h5		#		
h6		#		
h7		#		
h8		#		
h9		#		
s		#		
s1		#		
t		#		
v		#		
v1		#		
v3		#		
v4		#		
v5(E)		#		
v6		#		
v7(E)		#		
w		#5		
w1		#5		
z		#		
Concrete Box Culverts			Cu. Yd.	
Reinforcement Bars			Pound	
Reinforcement Bars, Epoxy Coated			Pound	

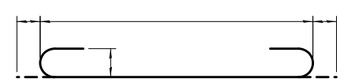

BAR a1

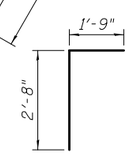

BAR d

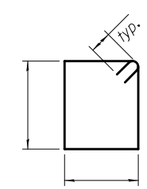

BAR s

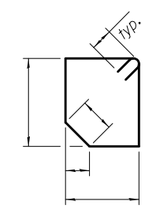

BAR s1

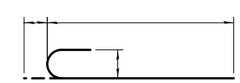

BAR v5(E)

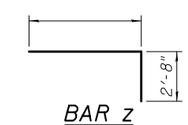

BAR z

Notes:
Bars indicated thus 12 x 4-#5 etc. indicates 12 lines of bars with 4 lengths per line.
At the Contractor's option, a longer v_1 bar may be ordered to replace the v bar. No reduction in quantities shall be made for this substitution.

TSB-SB-LT-LS 10-15-2016

FILE NAME =	USER NAME =	DESIGNED -	REVISED
		CHECKED -	REVISED
	PLOT SCALE =	DRAWN -	REVISED
	PLOT DATE =	CHECKED -	REVISED

STATE OF ILLINOIS
DEPARTMENT OF TRANSPORTATION

CULVERT DETAILS
STRUCTURE NO.
SHEET NO. OF SHEETS

F.A. RTE.	SECTION	COUNTY	TOTAL SHEETS	SHEET NO.

CONTRACT NO.
ILLINOIS FED. AID PROJECT

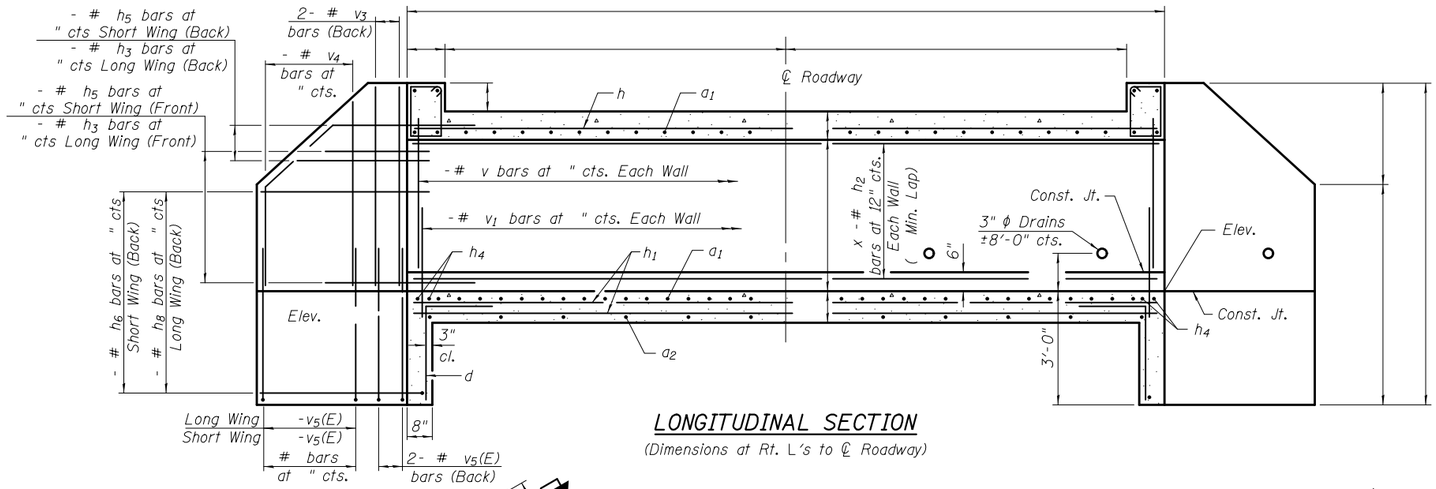

LONGITUDINAL SECTION

(Dimensions at Rt. L's to ℄ Roadway)

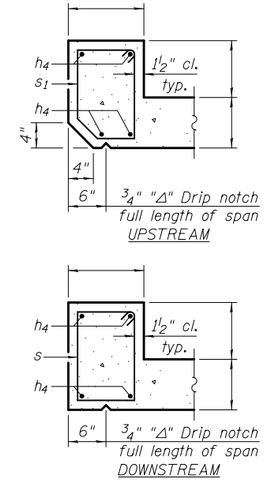

SECTION THRU HEADWALL

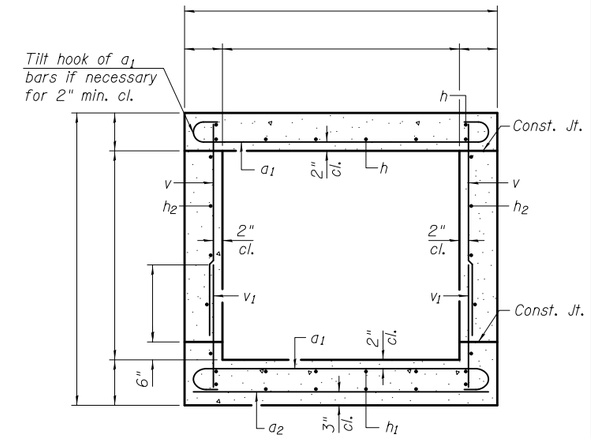

SECTION THRU BARREL

BILL OF MATERIAL

Bar	No.	Size	Length	Shape
a_1		#		
a_2		#		
d		#4	4'-5"	
h		#		
h_1		#		
h_2		#		
h_3		#4		
h_4		#		
h_5		#		
h_6		#		
h_7		#		
h_8		#		
h_9		#		
s		#		
s_1		#		
t		#		
v		#		
v_1		#		
v_3		#		
v_4		#		
$v_5(E)$		#		
v_6		#		
$v_7(E)$		#		
w		#5		
w_1		#5		
z		#		
Concrete Box Culverts			Cu. Yd.	
Reinforcement Bars			Pound	
Reinforcement Bars, Epoxy Coated			Pound	

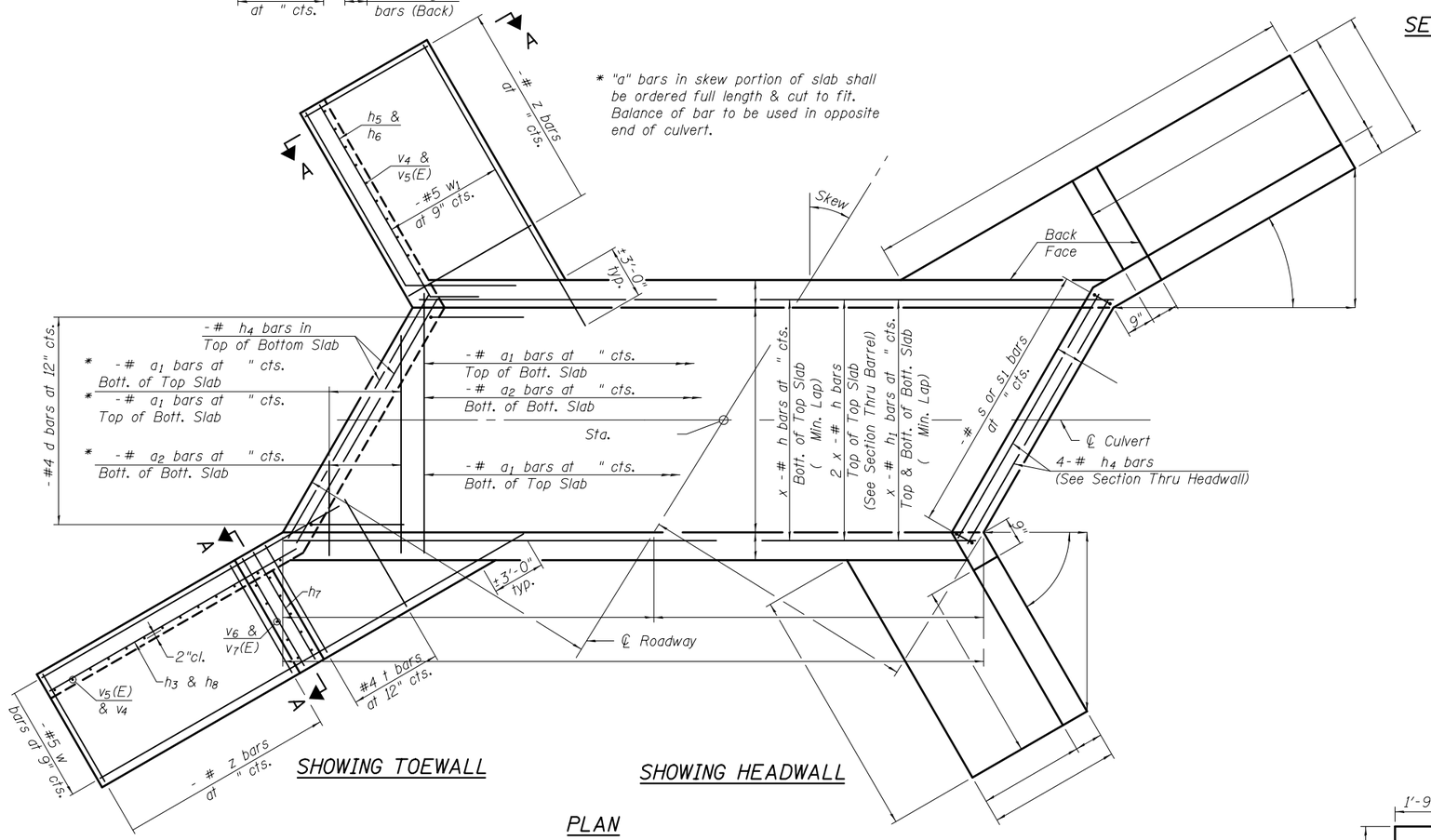

SHOWING TOEWALL

SHOWING HEADWALL

PLAN

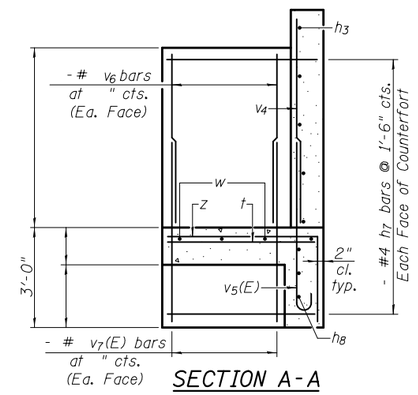

SECTION A-A

Showing long wing with counterfort.
Omit counterfort at short wing.

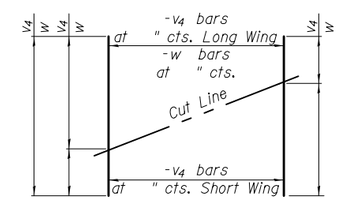

FIELD CUTTING DIAGRAM

Order bars shown full length. Cut as shown and use remainder of bars in opposite wingwall.

Notes:
Bars indicated thus 12 x 4-#5 etc. indicates 12 lines of bars with 4 lengths per line.
At the Contractor's option, a longer v_1 bar may be ordered to replace the v bar. No reduction in quantities shall be made for this substitution.

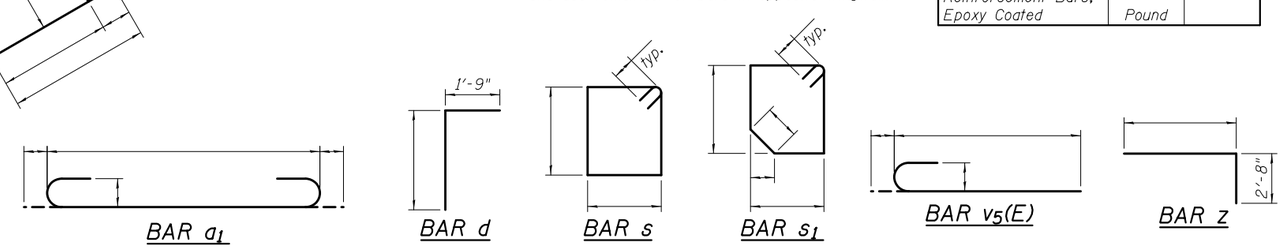

BAR a_1 BAR d BAR s BAR s_1 BAR $v_5(E)$ BAR z

TSB-SB-LT-RS 10-15-2016

FILE NAME =	USER NAME =	DESIGNED -	REVISED	STATE OF ILLINOIS DEPARTMENT OF TRANSPORTATION	CULVERT DETAILS STRUCTURE NO.	F.A. RTE.	SECTION	COUNTY	TOTAL SHEETS	SHEET NO.
		CHECKED -	REVISED							
	PLOT SCALE =	DRAWN -	REVISED					CONTRACT NO.		
	PLOT DATE =	CHECKED -	REVISED		SHEET NO. OF SHEETS		ILLINOIS	FED. AID PROJECT		

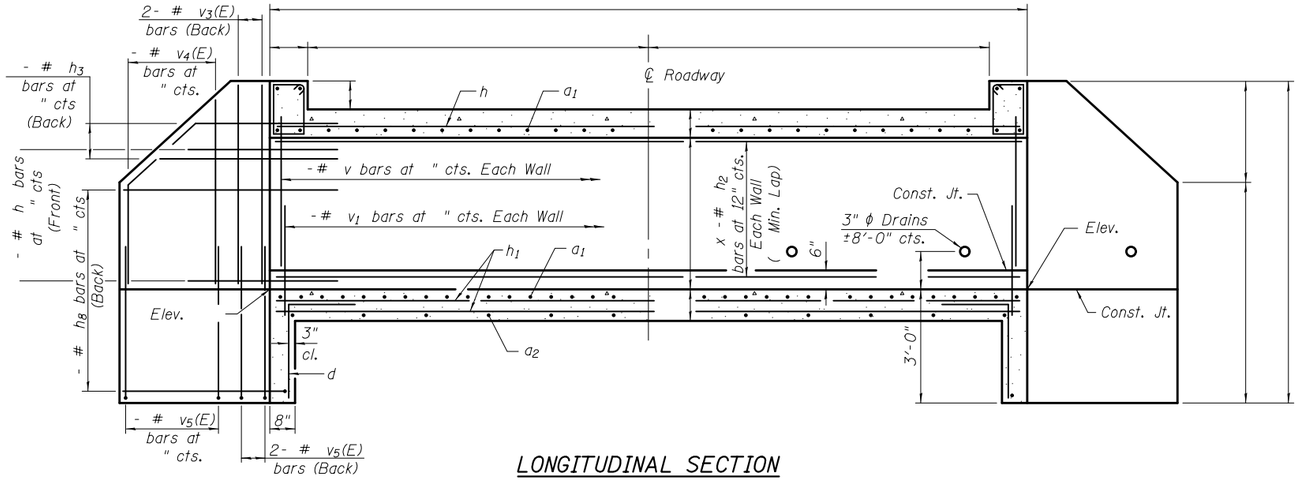

LONGITUDINAL SECTION

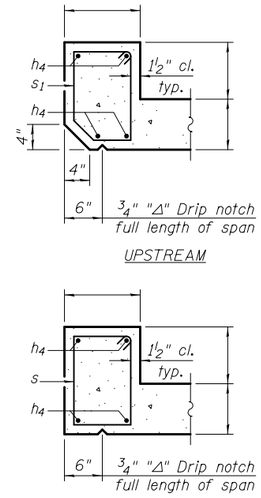

SECTION THRU HEADWALL

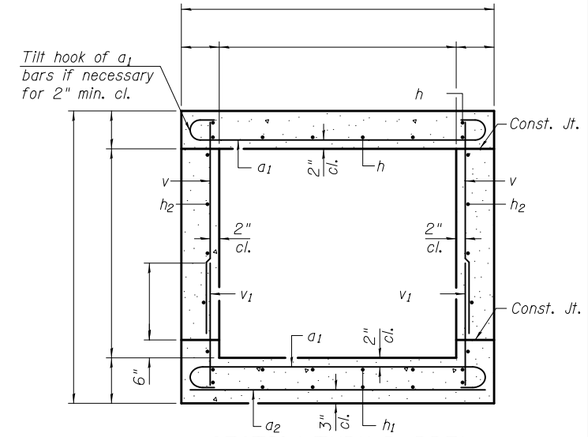

SECTION THRU BARREL

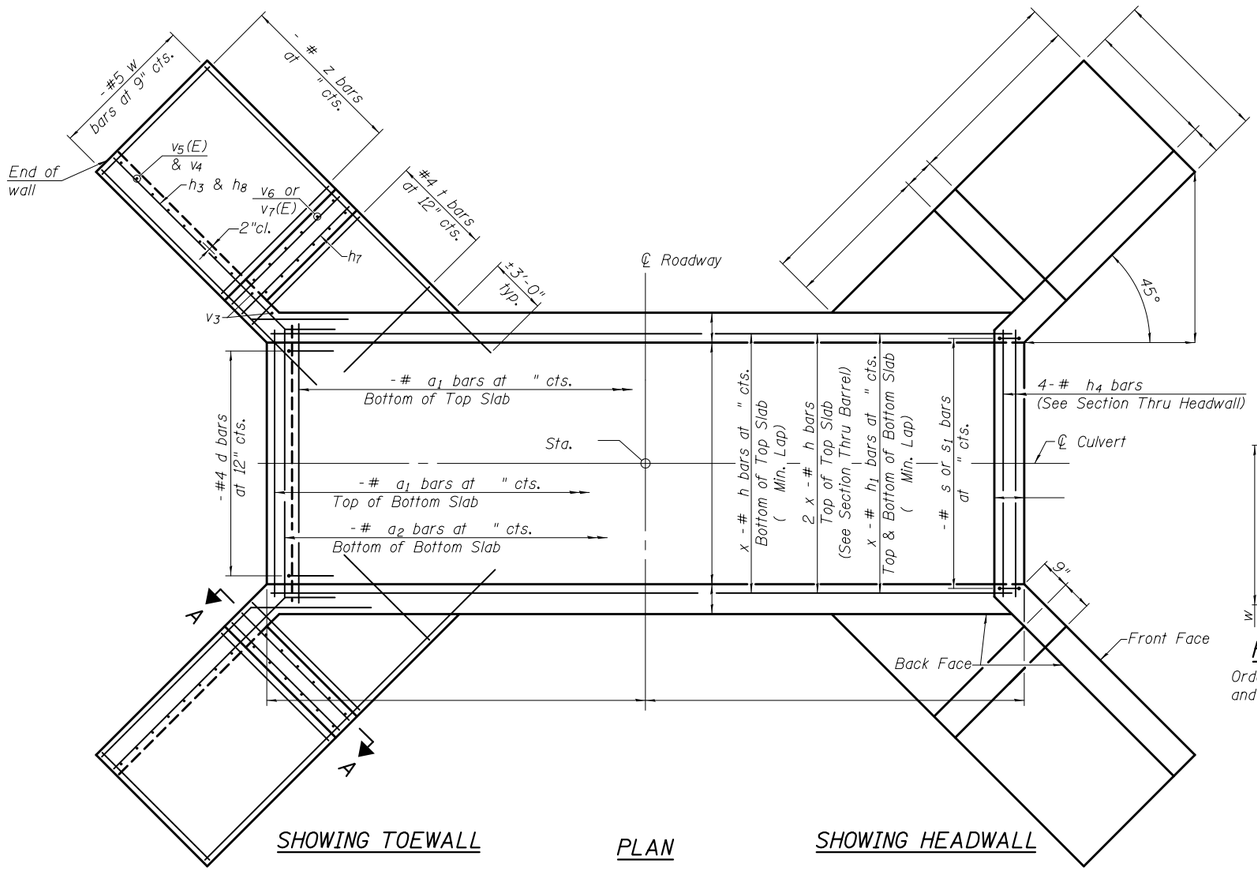

SHOWING TOEWALL

PLAN

SHOWING HEADWALL

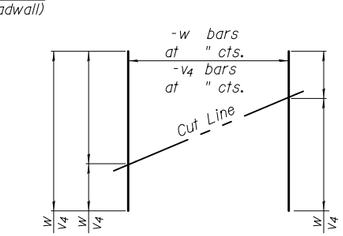

FIELD CUTTING DIAGRAM

Order bars shown full length. Cut as shown and use remainder of bars in opposite wingwall.

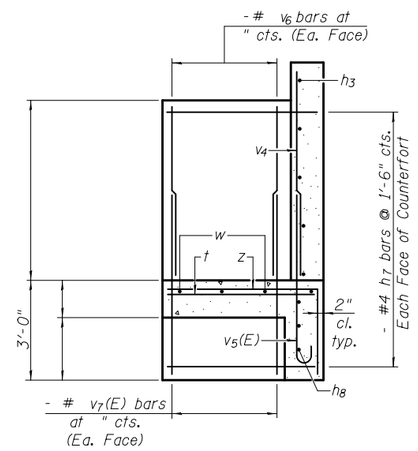

SECTION A-A

BILL OF MATERIAL

Bar	No.	Size	Length	Shape
a1		#		
a2		#		
d		#4	4'-5"	
h		#		
h1		#		
h2		#		
h3		#4		
h4		#		
h7		#4		
h9		#		
s		#		
s1		#		
t		#		
v		#		
v1		#		
v3		#		
v4		#		
v5(E)		#		
v6		#		
v7(E)		#		
w		#5		
z		#		
Concrete Box Culverts			Cu. Yd.	
Reinforcement Bars			Pound	
Reinforcement Bars, Epoxy Coated			Pound	

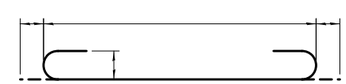

BAR a1

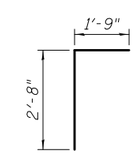

BAR d

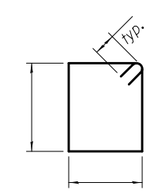

BAR s

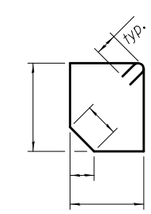

BAR s1

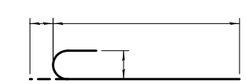

BAR v5(E)

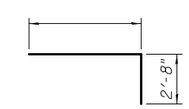

BAR z

Notes:
Bars indicated thus 12 x 4-#5 etc. indicates 12 lines of bars with 4 lengths per line.
At the Contractor's option, a longer v_1 bar may be ordered to replace the v bar. No reduction in quantities shall be made for this substitution.

TSB-SB-LT-ZS 10-15-2016

FILE NAME =	USER NAME =	DESIGNED -	REVISED	STATE OF ILLINOIS DEPARTMENT OF TRANSPORTATION	CULVERT DETAILS STRUCTURE NO.	F.A. RTE.	SECTION	COUNTY	TOTAL SHEETS	SHEET NO.
		CHECKED -	REVISED							
	PLOT SCALE =	DRAWN -	REVISED					CONTRACT NO.		
	PLOT DATE =	CHECKED -	REVISED		SHEET NO. OF SHEETS		ILLINOIS	FED. AID PROJECT		

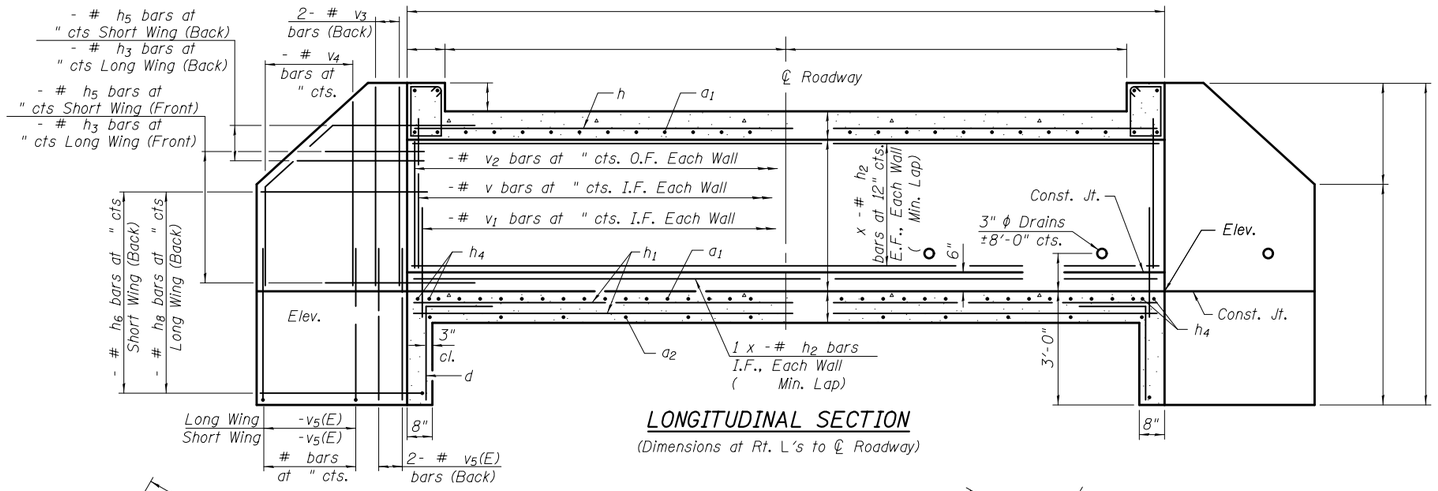

LONGITUDINAL SECTION

(Dimensions at Rt. L's to ℄ Roadway)

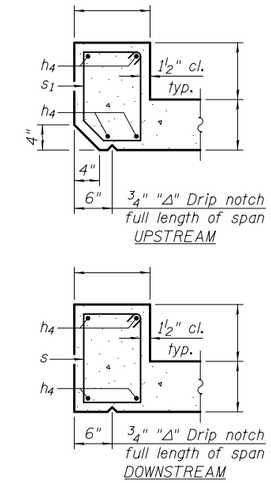

SECTION THRU HEADWALL

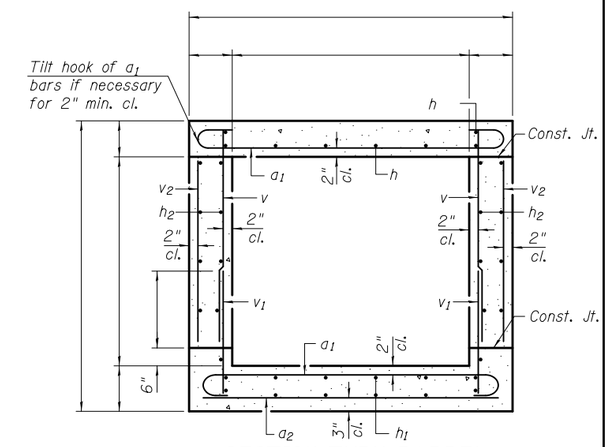

SECTION THRU BARREL

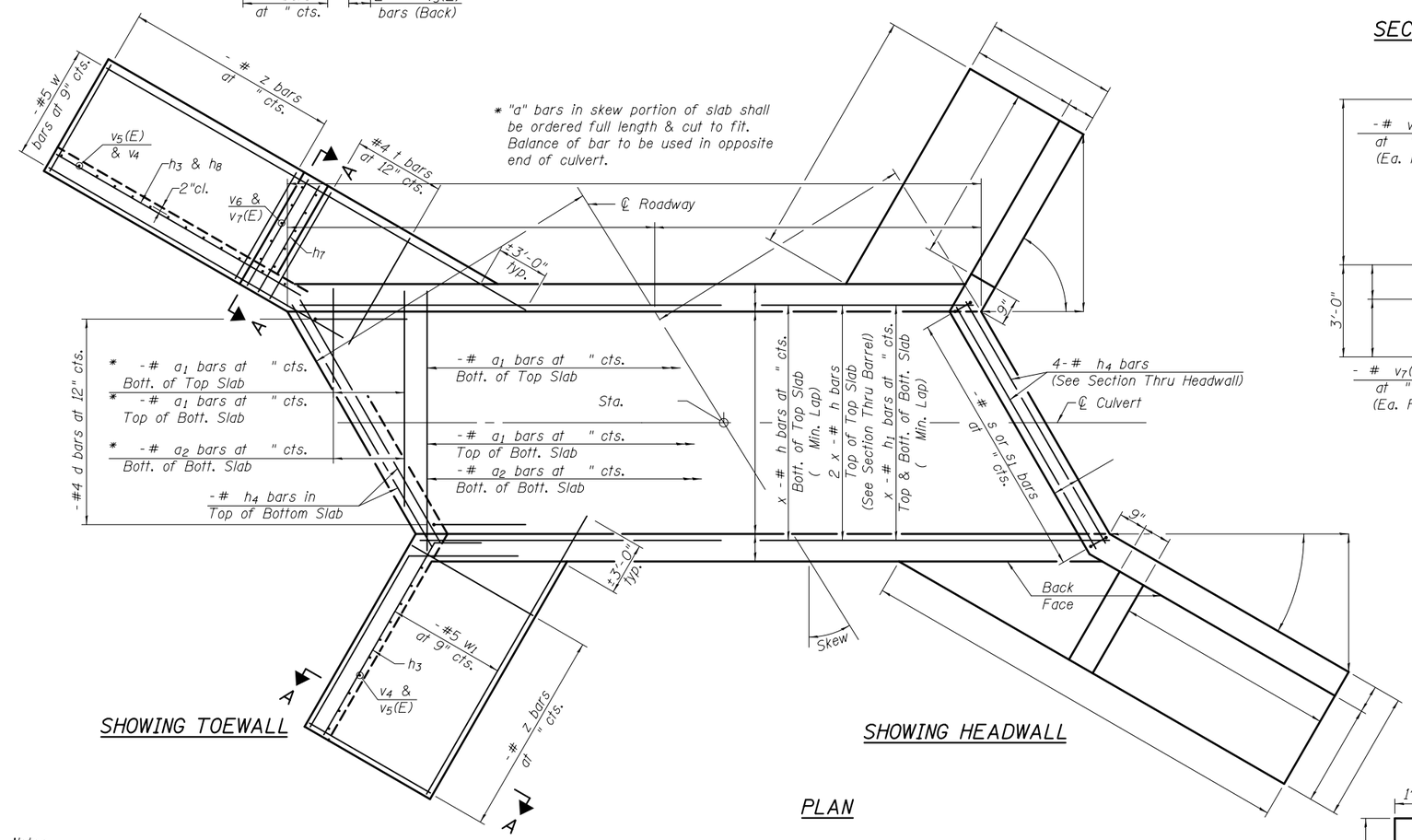

SHOWING TOEWALL

SHOWING HEADWALL

PLAN

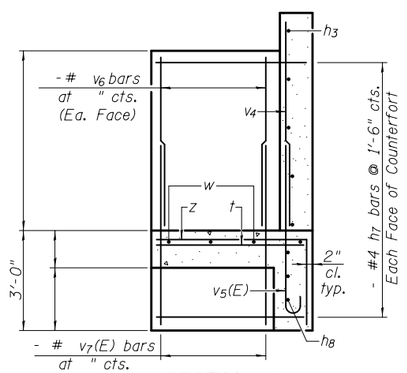

SECTION A-A

Showing long wing with counterfort. Omit counterfort at short wing.

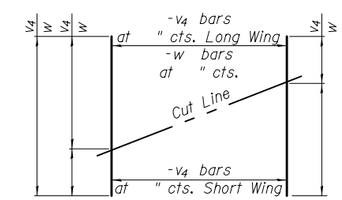

FIELD CUTTING DIAGRAM

Order bars shown full length. Cut as shown and use remainder of bars in opposite wingwall.

BILL OF MATERIAL

Bar	No.	Size	Length	Shape
a1		#		
a2		#		
d		#4	4'-5"	
h		#		
h1		#		
h2		#		
h3		#4		
h4		#		
h5		#		
h6		#		
h7		#		
h8		#		
h9		#		
s		#		
s1		#		
t		#		
v		#		
v1		#		
v3		#		
v4		#		
v5(E)		#		
v6		#		
v7(E)		#		
w		#5		
w1		#5		
z		#		
Concrete Box Culverts			Cu. Yd.	
Reinforcement Bars			Pound	
Reinforcement Bars, Epoxy Coated			Pound	

Notes:

Bars indicated thus 12 x 4-#5 etc. indicates 12 lines of bars with 4 lengths per line.

At the Contractor's option, a longer v_1 bar may be ordered to replace the v bar. No reduction in quantities shall be made for this substitution.

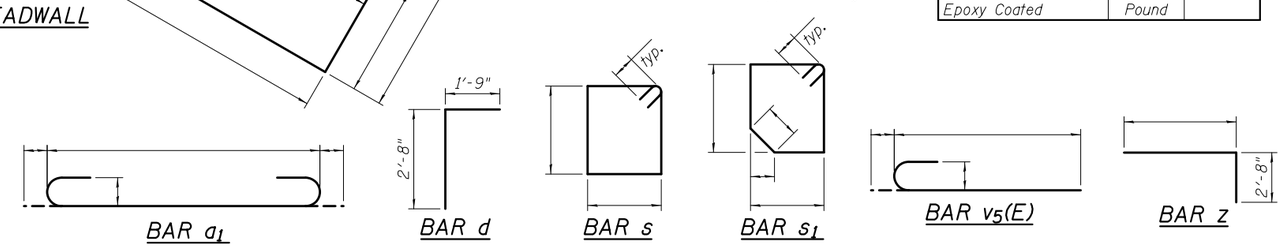

BAR a1 BAR d BAR s BAR s1 BAR v5(E) BAR z

TSB-SC-LT-LS 10-15-2016

FILE NAME =	USER NAME =	DESIGNED -	REVISED
		CHECKED -	REVISED
	PLOT SCALE =	DRAWN -	REVISED
	PLOT DATE =	CHECKED -	REVISED

STATE OF ILLINOIS
DEPARTMENT OF TRANSPORTATION

CULVERT DETAILS
STRUCTURE NO.

SHEET NO. OF SHEETS

F.A. RTE.	SECTION	COUNTY	TOTAL SHEETS	SHEET NO.

CONTRACT NO.

ILLINOIS FED. AID PROJECT

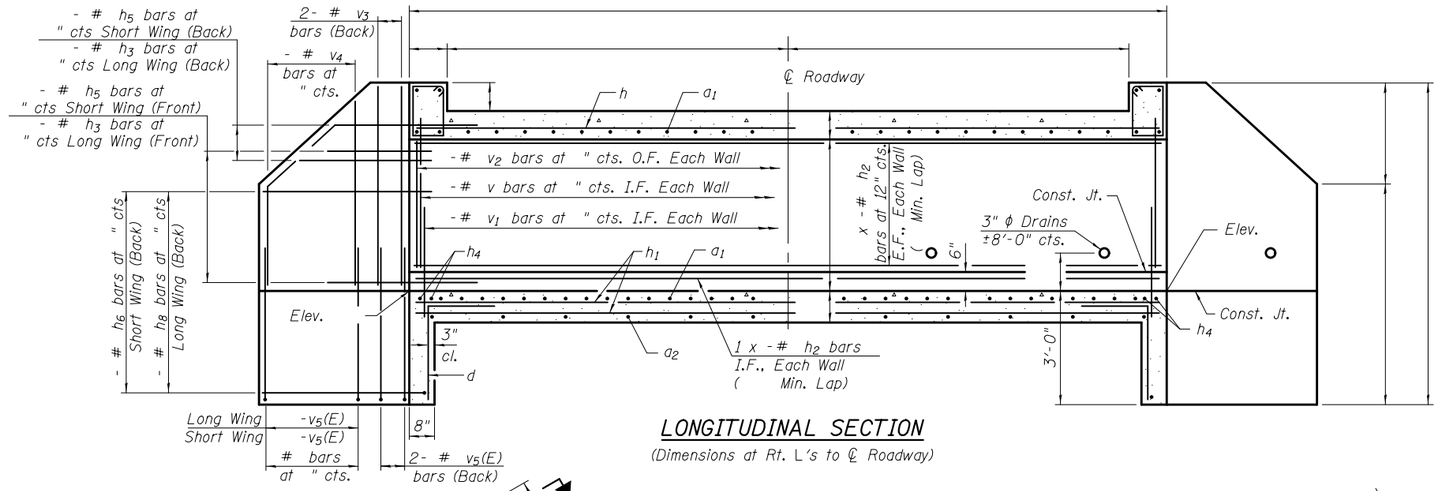

LONGITUDINAL SECTION

(Dimensions at Rt. L's to ℄ Roadway)

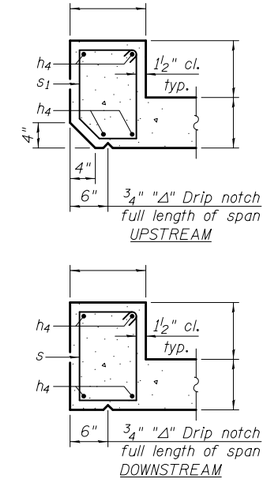

SECTION THRU HEADWALL

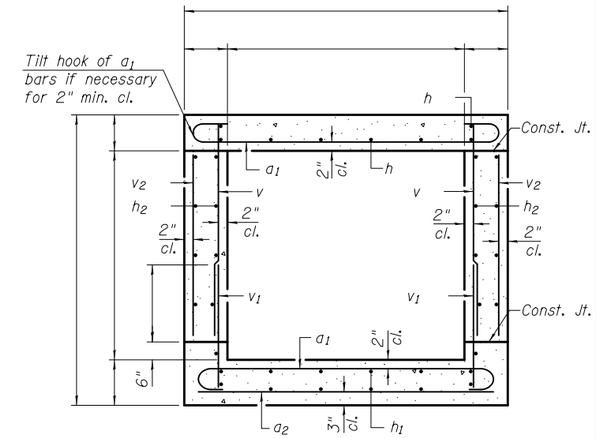

SECTION THRU BARREL

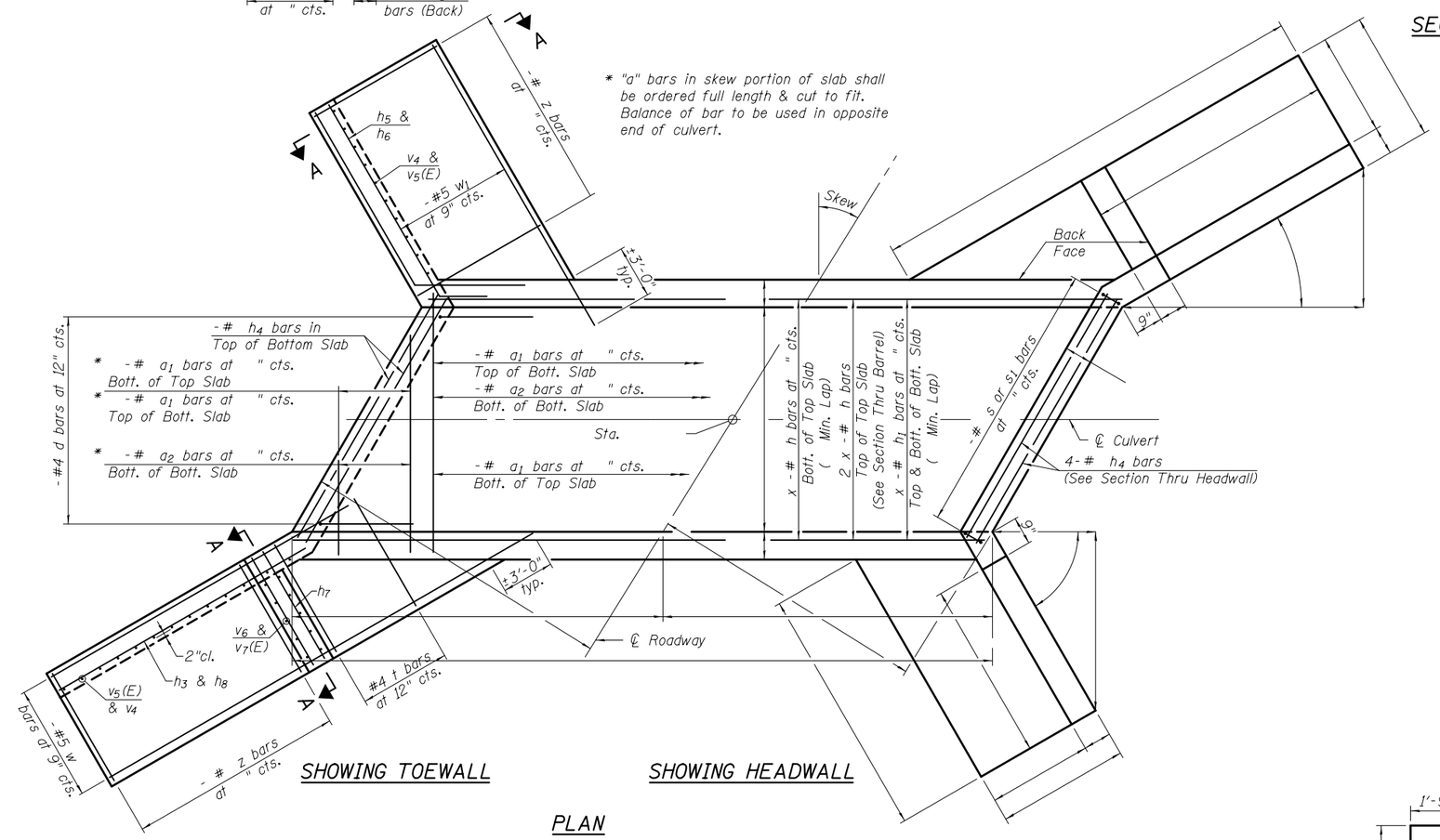

* "a" bars in skew portion of slab shall be ordered full length & cut to fit. Balance of bar to be used in opposite end of culvert.

SHOWING TOEWALL

SHOWING HEADWALL

PLAN

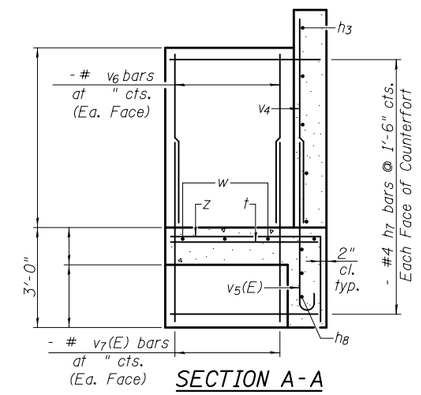

SECTION A-A

Showing long wing with counterfort.
Omit counterfort at short wing.

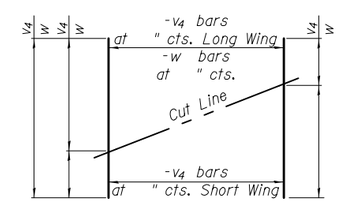

FIELD CUTTING DIAGRAM

Order bars shown full length. Cut as shown and use remainder of bars in opposite wingwall.

BILL OF MATERIAL

Bar	No.	Size	Length	Shape
a1		#		
a2		#		
d		#4	4'-5"	
h		#		
h1		#		
h2		#		
h3		#4		
h4		#		
h5		#		
h6		#		
h7		#		
h8		#		
h9		#		
s		#		
s1		#		
t		#		
v		#		
v1		#		
v3		#		
v4		#		
v5(E)		#		
v6		#		
v7(E)		#		
w		#5		
w1		#5		
z		#		
Concrete Box Culverts			Cu. Yd.	
Reinforcement Bars			Pound	
Reinforcement Bars, Epoxy Coated			Pound	

Notes:
Bars indicated thus 12 x 4-#5 etc. indicates 12 lines of bars with 4 lengths per line.
At the Contractor's option, a longer v_1 bar may be ordered to replace the v bar. No reduction in quantities shall be made for this substitution.

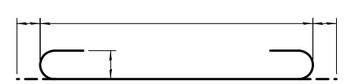

BAR a_1

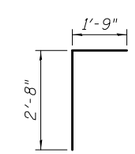

BAR d

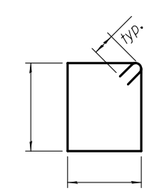

BAR s

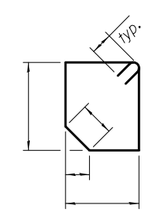

BAR s_1

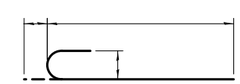

BAR $v_5(E)$

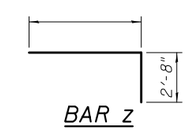

BAR z

TSB-SC-LT-RS 10-15-2016

FILE NAME =	USER NAME =	DESIGNED -	REVISED	STATE OF ILLINOIS DEPARTMENT OF TRANSPORTATION	CULVERT DETAILS STRUCTURE NO.	F.A. RTE.	SECTION	COUNTY	TOTAL SHEETS	SHEET NO.
		CHECKED -	REVISED							
	PLOT SCALE =	DRAWN -	REVISED					CONTRACT NO.		
	PLOT DATE =	CHECKED -	REVISED		SHEET NO. OF SHEETS		ILLINOIS	FED. AID PROJECT		

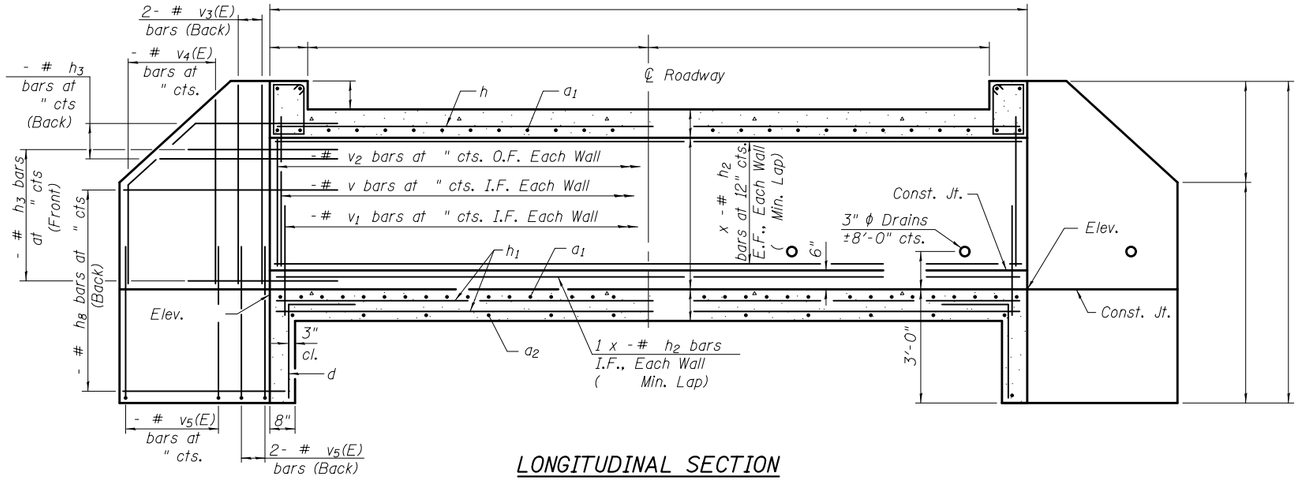

LONGITUDINAL SECTION

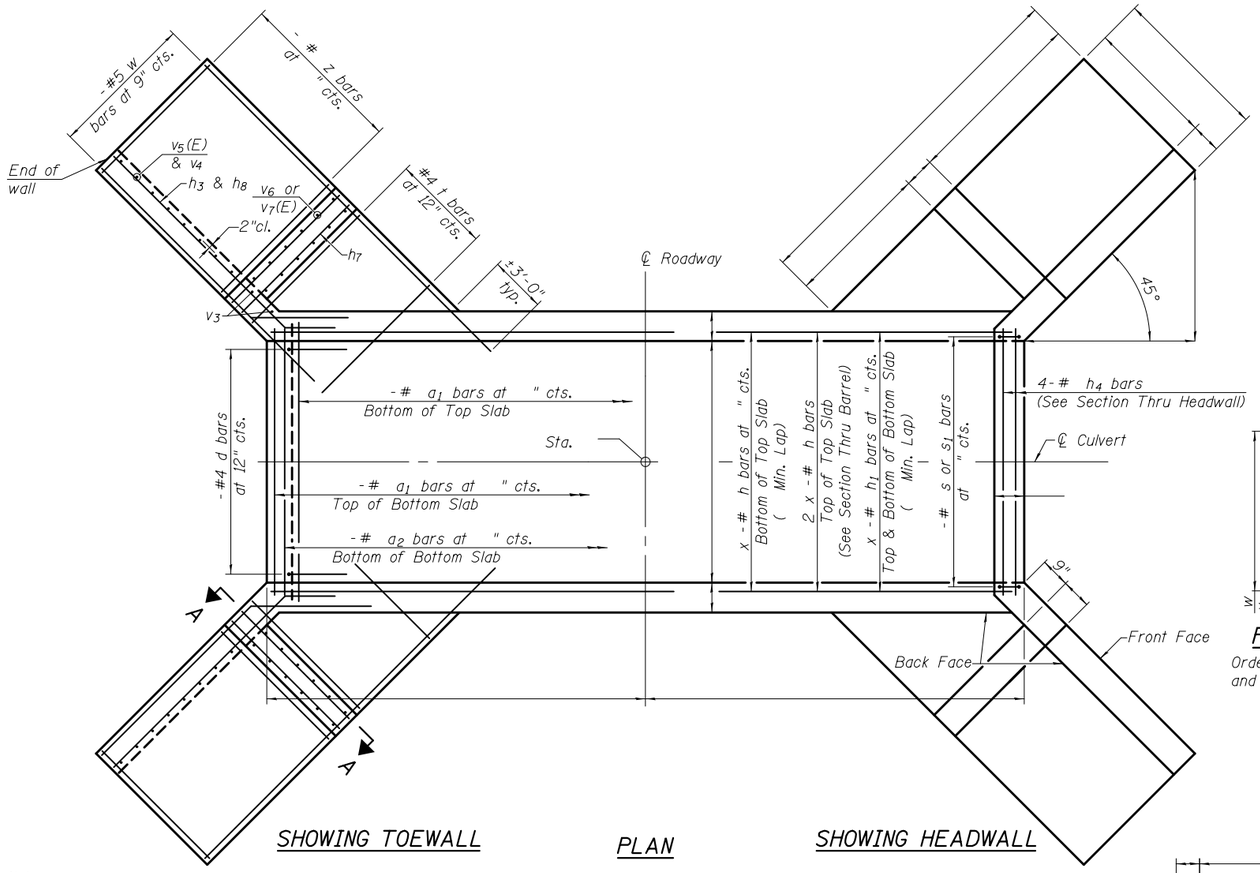

SHOWING TOEWALL

PLAN

SHOWING HEADWALL

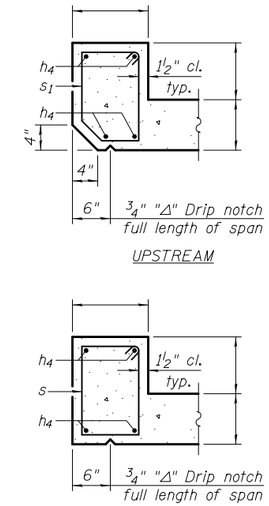

SECTION THRU HEADWALL

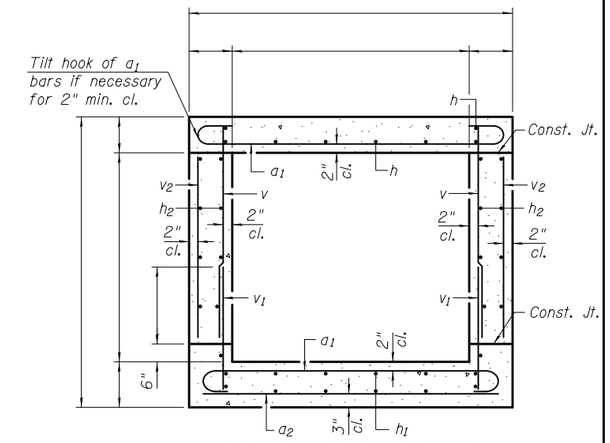

SECTION THRU BARREL

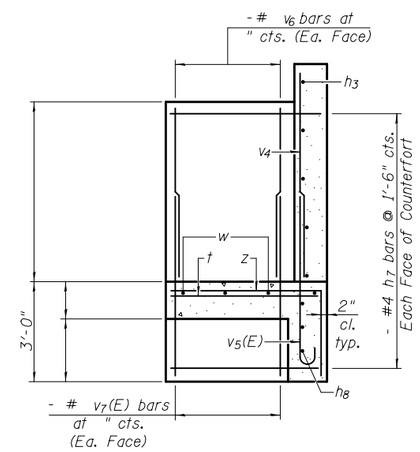

SECTION A-A

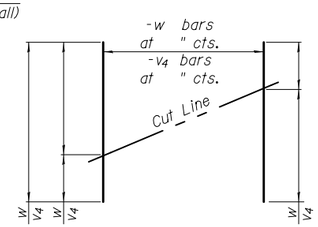

FIELD CUTTING DIAGRAM

Order bars shown full length. Cut as shown and use remainder of bars in opposite wingwall.

BILL OF MATERIAL

Bar	No.	Size	Length	Shape
a1		#		
a2		#		
d		#4	4'-5"	
h		#		
h1		#		
h2		#		
h3		#4		
h4		#		
h7		#4		
h9		#		
s		#		
s1		#		
t		#		
v		#		
v1		#		
v3		#		
v4		#		
v5(E)		#		
v6		#		
v7(E)		#		
w		#5		
z		#		
Concrete Box Culverts			Cu. Yd.	
Reinforcement Bars			Pound	
Reinforcement Bars, Epoxy Coated			Pound	

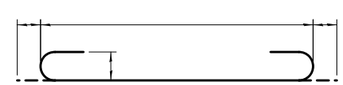

BAR a1

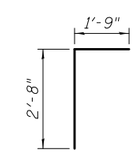

BAR d

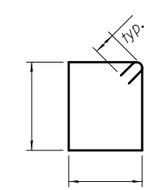

BAR s

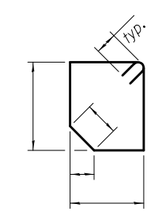

BAR s1

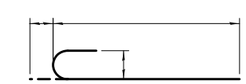

BAR v5(E)

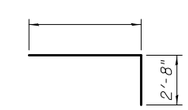

BAR z

Notes:
Bars indicated thus 12 x 4-#5 etc. indicates 12 lines of bars with 4 lengths per line.
At the Contractor's option, a longer v_1 bar may be ordered to replace the v bar. No reduction in quantities shall be made for this substitution.

TSB-SC-LT-ZS 10-15-2016

FILE NAME =	USER NAME =	DESIGNED -	REVISED
		CHECKED -	REVISED
	PLOT SCALE =	DRAWN -	REVISED
	PLOT DATE =	CHECKED -	REVISED

STATE OF ILLINOIS
DEPARTMENT OF TRANSPORTATION

CULVERT DETAILS
STRUCTURE NO.
SHEET NO. OF SHEETS

F.A. RTE.	SECTION	COUNTY	TOTAL SHEETS	SHEET NO.

CONTRACT NO.
ILLINOIS FED. AID PROJECT