CELL / MODEL NAME	DESCRIPTION	DATE
TSA-SB-TT-LS	2 rows of reinf in top slab; 1 row of reinf in each sidewall; T-Type Wingwalls, Left Skew	10/15/2016
TSA-SB-TT-RS	2 rows of reinf in top slab; 1 row of reinf in each sidewall; T-Type Wingwalls, Right Skew	10/15/2016
TSA-SB-TT-ZS	2 rows of reinf in top slab; 1 row of reinf in each sidewall; T-Type Wingwalls, Zero Skew	10/15/2016
TSA-SC-TT-LS	2 rows of reinf in top slab; 2 rows of reinf in each sidewall; T-Type Wingwalls, Left Skew	10/15/2016
TSA-SC-TT-RS	2 rows of reinf in top slab; 2 rows of reinf in each sidewall; T-Type Wingwalls, Right Skew	10/15/2016
TSA-SC-TT-ZS	2 rows of reinf in top slab; 2 rows of rein in each sidewall; T-Type Wingwalls, Zero Skew	10/15/2016
TSB-SB-TT-LS	1 row of reinf in top slab; 1 row of reinf in each sidewall; T-Type Wingwalls, Left Skew	10/15/2016
TSB-SB-TT-RS	1 row of reinf in top slab; 1 row of reinf in each sidewall; T-Type Wingwalls, Right Skew	10/15/2016
TSB-SB-TT-ZS	1 row of reinf in top slab; 1 row of reinf in each sidewall; T-Type Wingwalls, Zero Skew	10/15/2016
TSB-SC-TT-LS	1 row of reinf in top slab; 2 rows of reinf in each sidewall; T-Type Wingwalls, Left Skew	10/15/2016
TSB-SC-TT-RS	1 row of reinf in top slab; 2 rows of reinf in each sidewall; T-Type Wingwalls, Right Skew	10/15/2016
TSB-SC-TT-ZS	1 row of reinf in top slab; 2 rows of reinf in each sidewall; T-Type Wingwalls, Zero Skew	10/15/2016

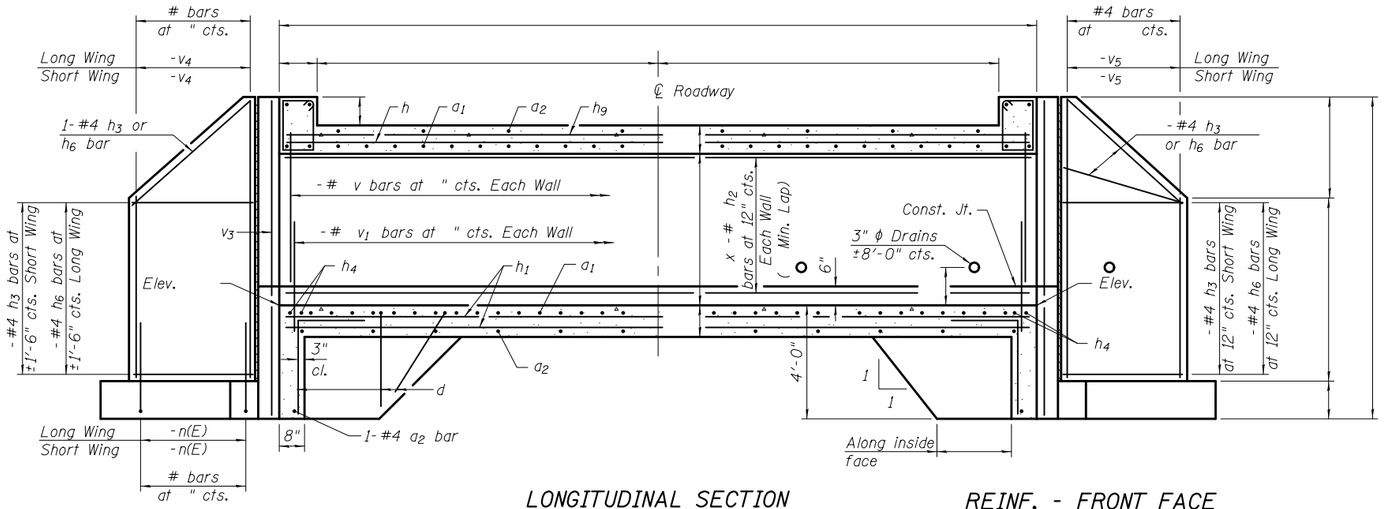

REINF. - BACK FACE

LONGITUDINAL SECTION

(Dimensions at Rt. L's to ℄ Roadway)

REINF. - FRONT FACE

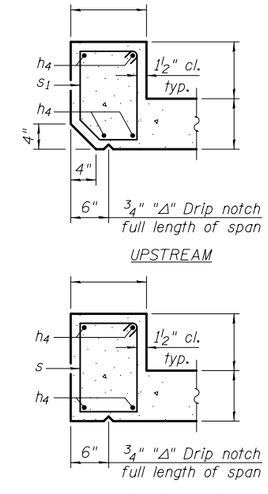

SECTION THRU HEADWALL

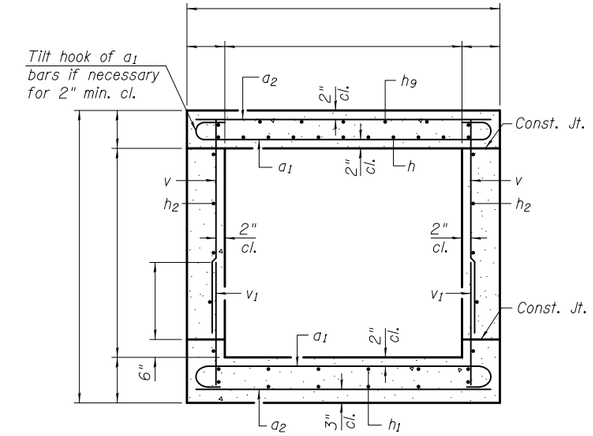

SECTION THRU BARREL

BILL OF MATERIAL

Bar	No.	Size	Length	Shape
a_1		#		
a_2		#		
d		#4	5'-5"	
h		#		
h_1		#		
h_2		#		
h_3		#4		
h_4		#		
h_6		#4		
h_9		#		
n(E)		#		
s		#		
s_1		#		
t		#		
v		#		
v_1		#		
v_3		#		
v_4		#		
v_5		#		
w		#5		
w_1		#5		
Concrete Box Culverts		Cu. Yd.		
Reinforcement Bars		Pound		
Reinforcement Bars, Epoxy Coated		Pound		

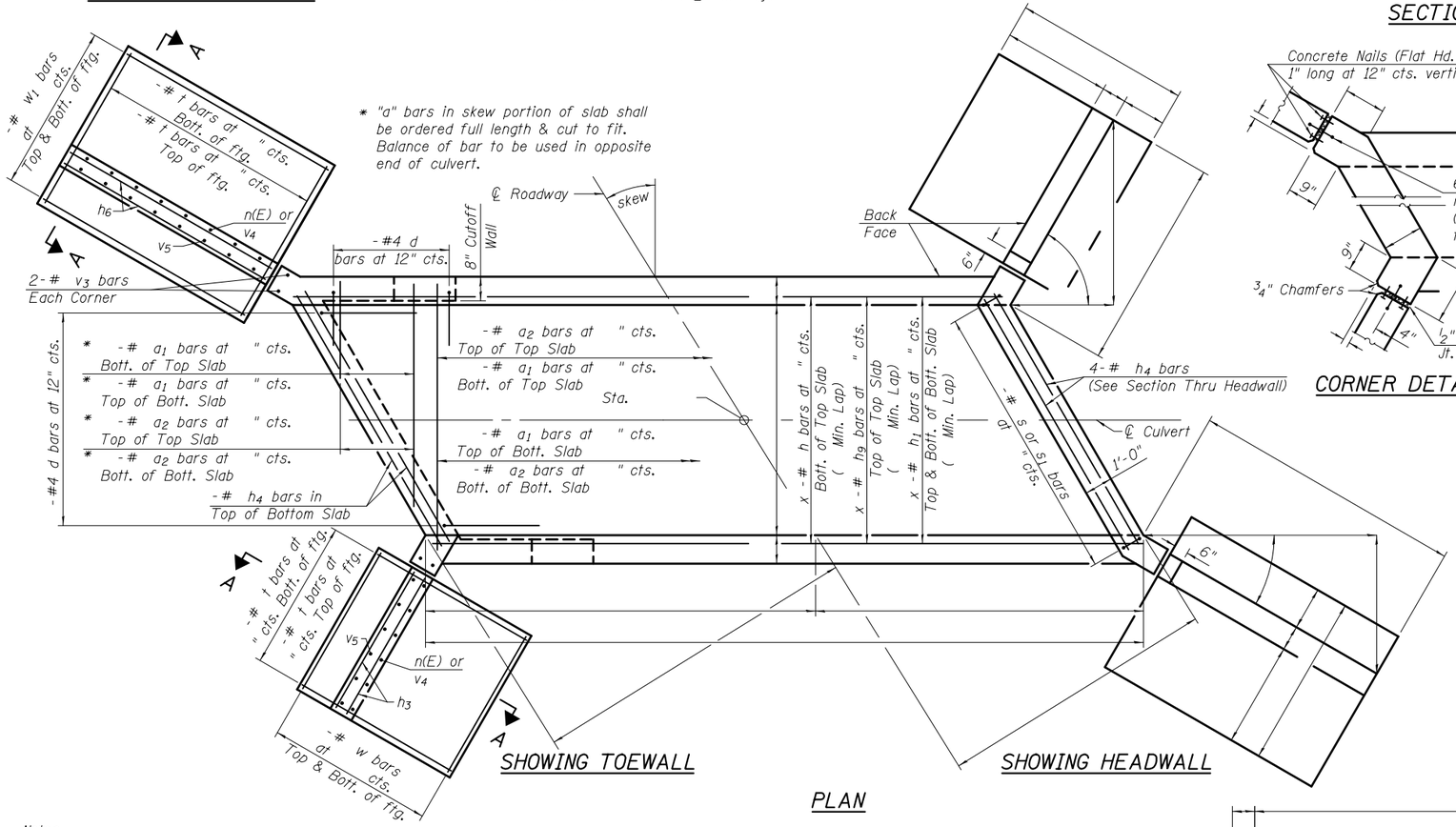

SHOWING TOEWALL

SHOWING HEADWALL

PLAN

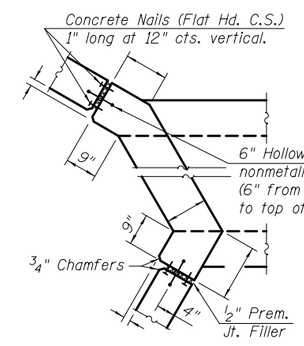

CORNER DETAIL

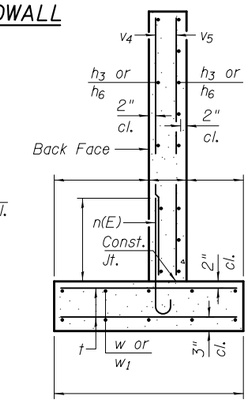

SECTION A-A

(Max. Applied Service Bearing Pressure = ksf)

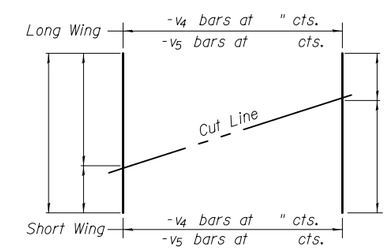

FIELD CUTTING DIAGRAM

Order bars shown full length. Cut as shown and use remainder of bars in opposite wingwall.

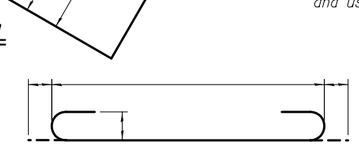

BAR a_1

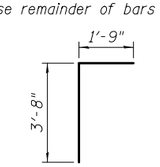

BAR d

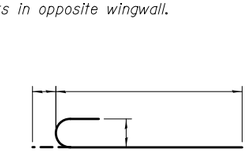

BAR n(E)

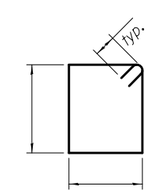

BAR s

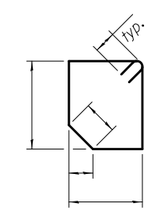

BAR s_1

Notes:

Bars indicated thus 12 x 4-#5 etc. indicates 12 lines of bars with 4 lengths per line.

At the Contractor's option, a longer v_1 bar may be ordered to replace the v bar. No reduction in quantities shall be made for this substitution.

TSA-SB-TT-LS 10-15-2016

FILE NAME =	USER NAME =	DESIGNED -	REVISED
		CHECKED -	REVISED
	PLOT SCALE =	DRAWN -	REVISED
	PLOT DATE =	CHECKED -	REVISED

STATE OF ILLINOIS
DEPARTMENT OF TRANSPORTATION

CULVERT DETAILS
STRUCTURE NO.

SHEET NO. OF SHEETS

F.A. RTE.	SECTION	COUNTY	TOTAL SHEETS	SHEET NO.

CONTRACT NO.

ILLINOIS FED. AID PROJECT

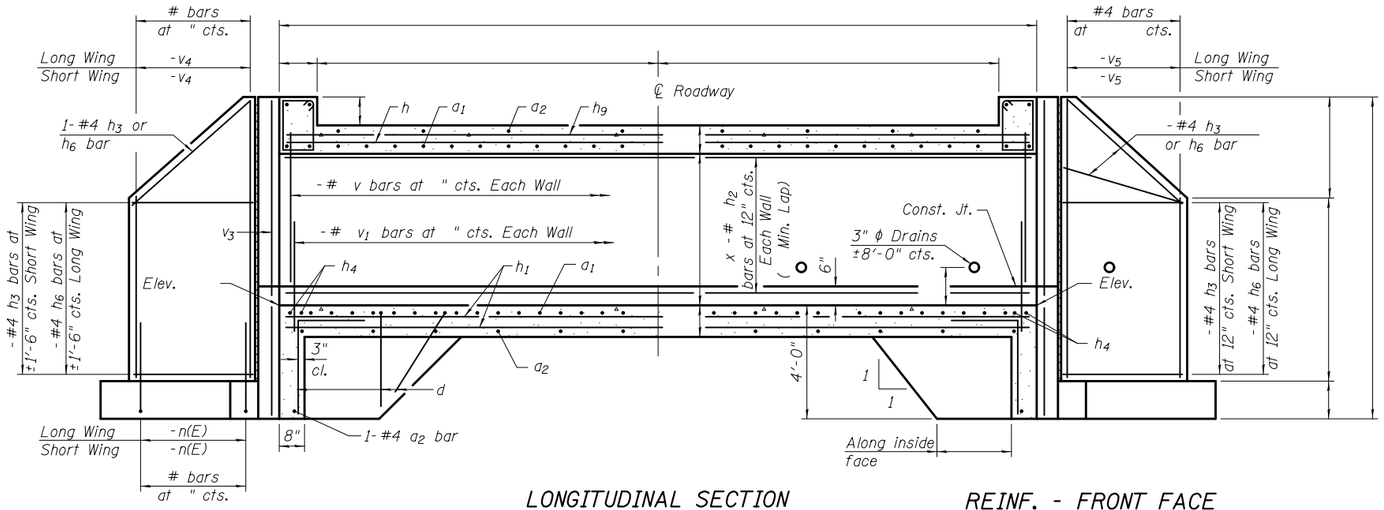

REINF. - BACK FACE

LONGITUDINAL SECTION

(Dimensions at Rt. L's to ℄ Roadway)

REINF. - FRONT FACE

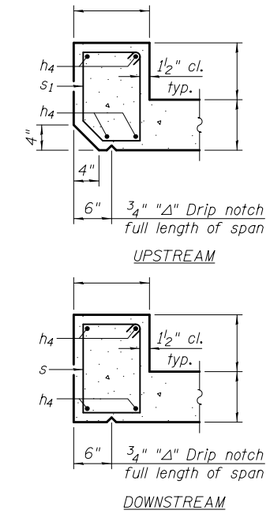

SECTION THRU HEADWALL

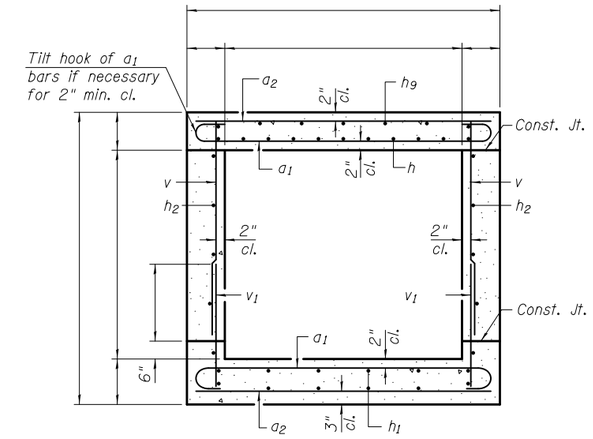

SECTION THRU BARREL

BILL OF MATERIAL

Bar	No.	Size	Length	Shape
a_1		#		
a_2		#		
d		#4	5'-5"	
h		#		
h_1		#		
h_2		#		
h_3		#4		
h_4		#		
h_6		#4		
h_9		#		
n(E)		#		
s		#		
s_1		#		
t		#		
v		#		
v_1		#		
v_3		#		
v_4		#		
v_5		#		
w		#5		
w_1		#5		
Concrete Box Culverts		Cu. Yd.		
Reinforcement Bars		Pound		
Reinforcement Bars, Epoxy Coated		Pound		

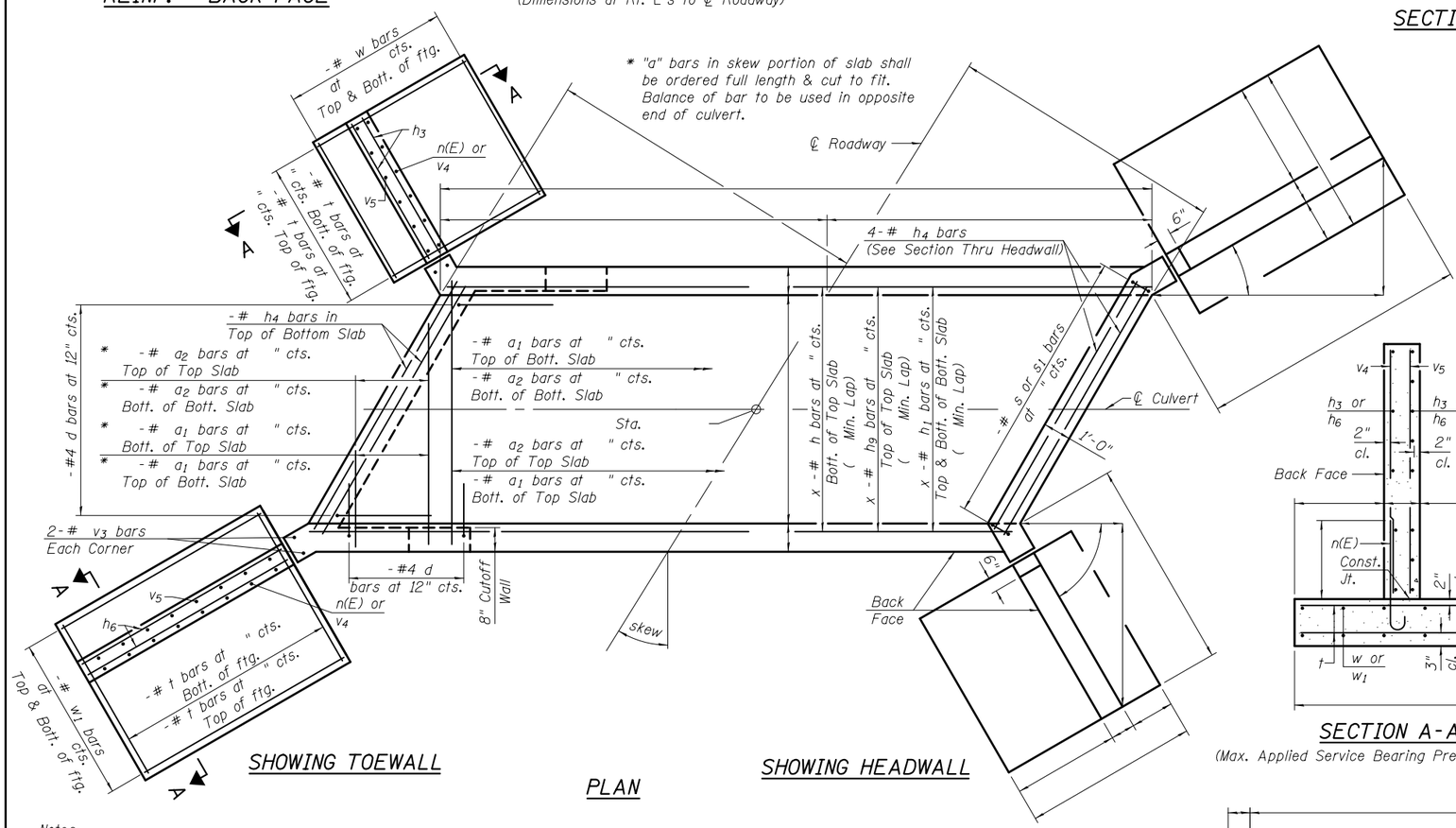

SHOWING TOEWALL

PLAN

SHOWING HEADWALL

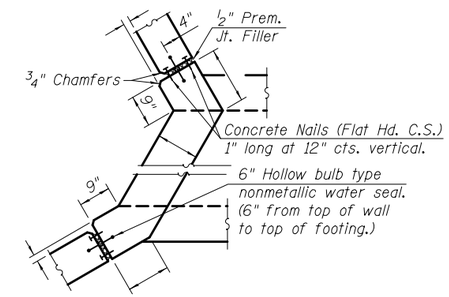

CORNER DETAIL

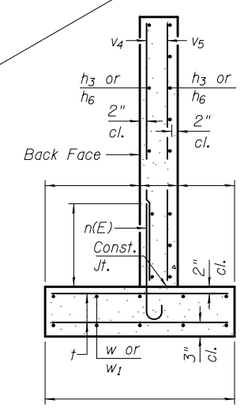

SECTION A-A

(Max. Applied Service Bearing Pressure = ksf)

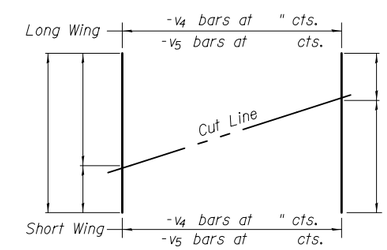

FIELD CUTTING DIAGRAM

Order bars shown full length. Cut as shown and use remainder of bars in opposite wingwall.

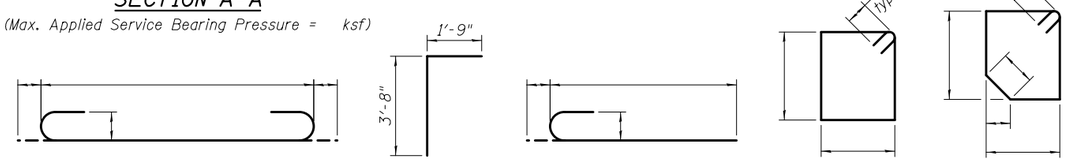

BAR a_1 BAR d BAR n(E) BAR s BAR s_1

Notes:

Bars indicated thus 12 x 4-#5 etc. indicates 12 lines of bars with 4 lengths per line.

At the Contractor's option, a longer v_1 bar may be ordered to replace the v bar. No reduction in quantities shall be made for this substitution.

TSA-SB-TT-RS 10-15-2016

FILE NAME =	USER NAME =	DESIGNED -	REVISED
		CHECKED -	REVISED
	PLOT SCALE =	DRAWN -	REVISED
	PLOT DATE =	CHECKED -	REVISED

STATE OF ILLINOIS
DEPARTMENT OF TRANSPORTATION

CULVERT DETAILS
STRUCTURE NO.

SHEET NO. OF SHEETS

F.A. RTE.	SECTION	COUNTY	TOTAL SHEETS	SHEET NO.

CONTRACT NO.

ILLINOIS FED. AID PROJECT

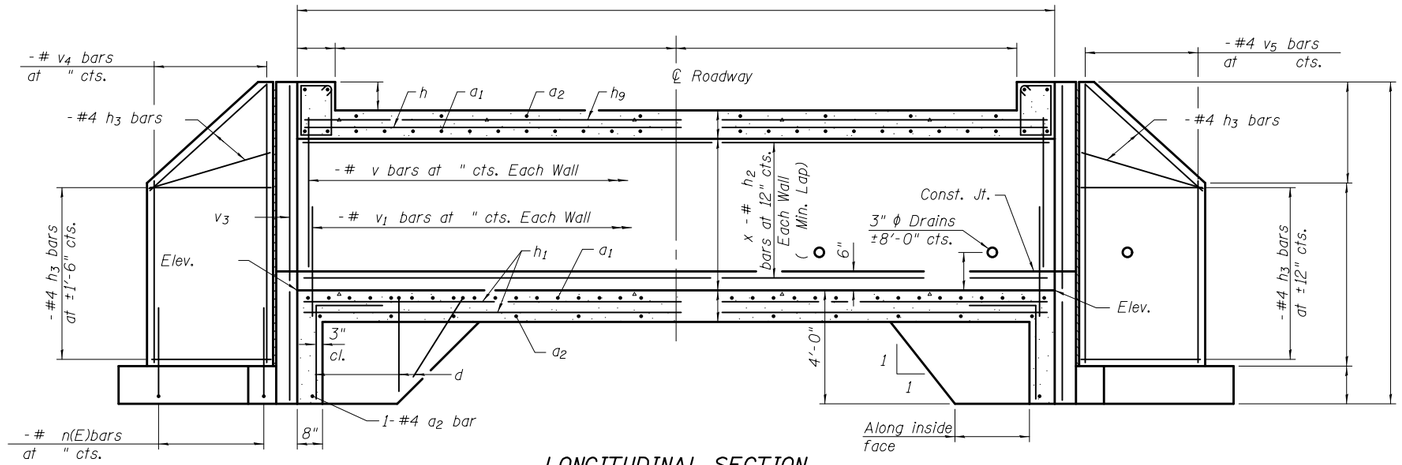

REINF. - BACK FACE

LONGITUDINAL SECTION

REINF. - FRONT FACE

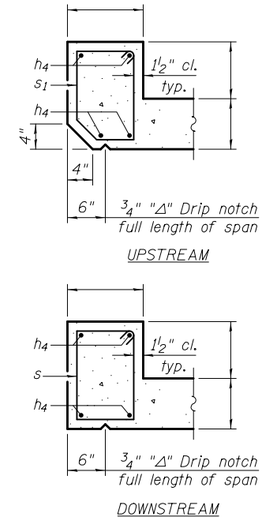

SECTION THRU HEADWALL

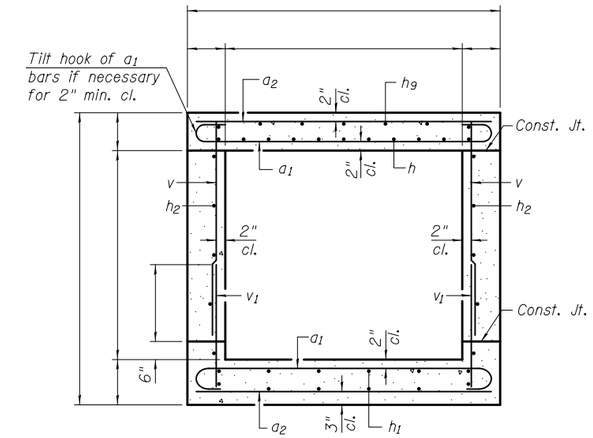

SECTION THRU BARREL

BILL OF MATERIAL

Bar	No.	Size	Length	Shape
a_1		#		
a_2		#		
d		#4	5'-5"	
h		#		
h_1		#		
h_2		#		
h_3		#4		
h_4		#		
h_9		#		
n(E)		#		
s		#		
s_1		#		
t		#		
v		#		
v_1		#		
v_3		#		
v_4		#		
v_5		#		
w		#5		
Concrete Box Culverts			Cu. Yd.	
Reinforcement Bars			Pound	
Reinforcement Bars, Epoxy Coated			Pound	

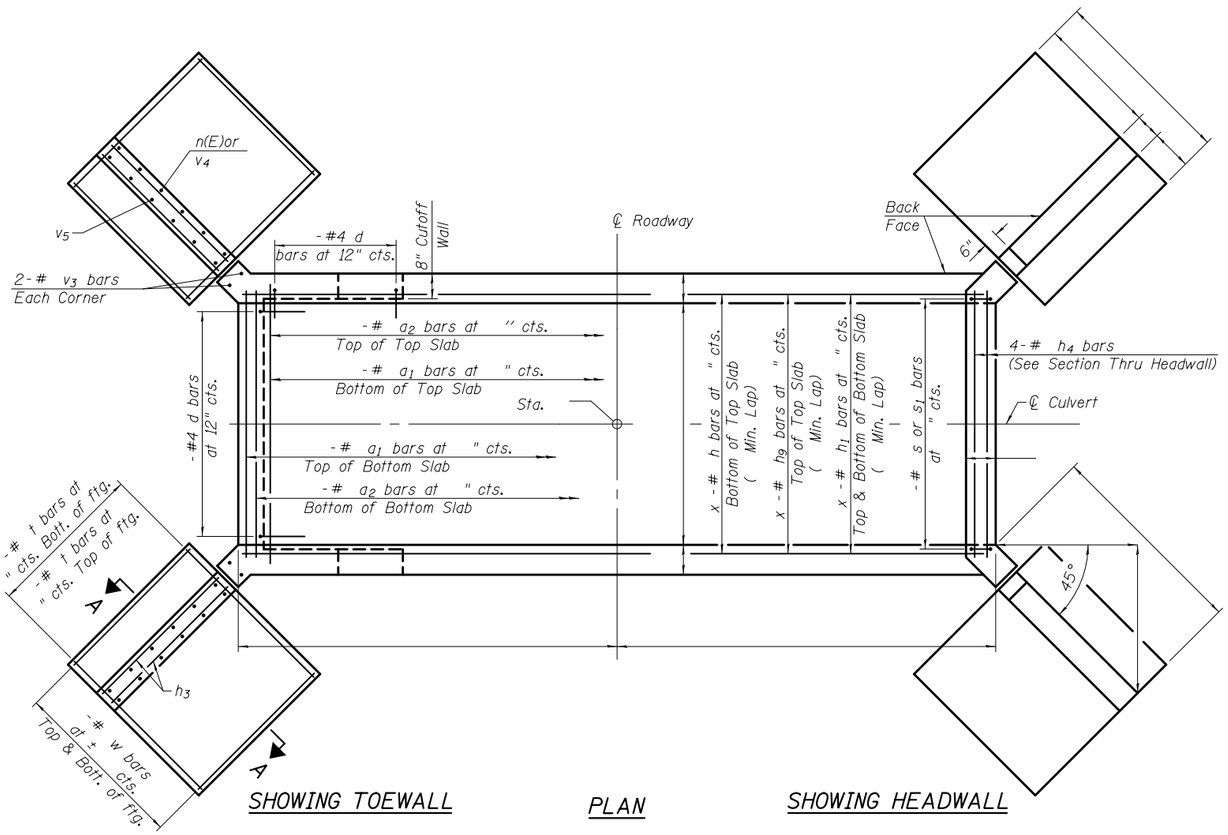

SHOWING TOEWALL

PLAN

SHOWING HEADWALL

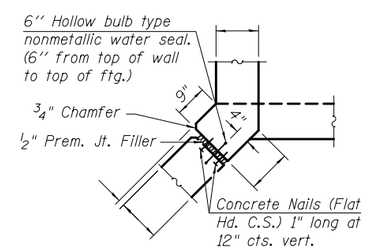

CORNER DETAIL

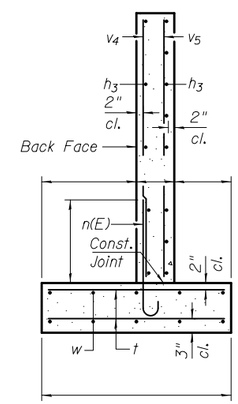

SECTION A-A

(Max. Applied Service Bearing Pressure = ksf)

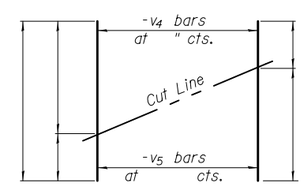

FIELD CUTTING DIAGRAM

Order bars shown full length. Cut as shown and use remainder of bars in opposite wingwall.

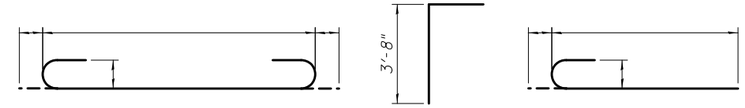

BAR a_1 BAR d BAR n(E)

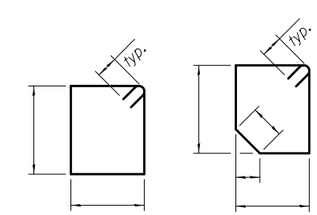

BAR s BAR s_1

Notes:

Bars indicated thus 12 x 4-#5 etc. indicates 12 lines of bars with 4 lengths per line.

At the Contractor's option, a longer v_1 bar may be ordered to replace the v bar. No reduction in quantities shall be made for this substitution.

TSA-SB-TT-ZS 10-15-2016

FILE NAME =	USER NAME =	DESIGNED -	REVISED	STATE OF ILLINOIS DEPARTMENT OF TRANSPORTATION	CULVERT DETAILS STRUCTURE NO.	F.A. RTE.	SECTION	COUNTY	TOTAL SHEETS	SHEET NO.
		CHECKED -	REVISED							
	PLOT SCALE =	DRAWN -	REVISED					CONTRACT NO.		
	PLOT DATE =	CHECKED -	REVISED		SHEET NO. OF SHEETS		ILLINOIS	FED. AID PROJECT		

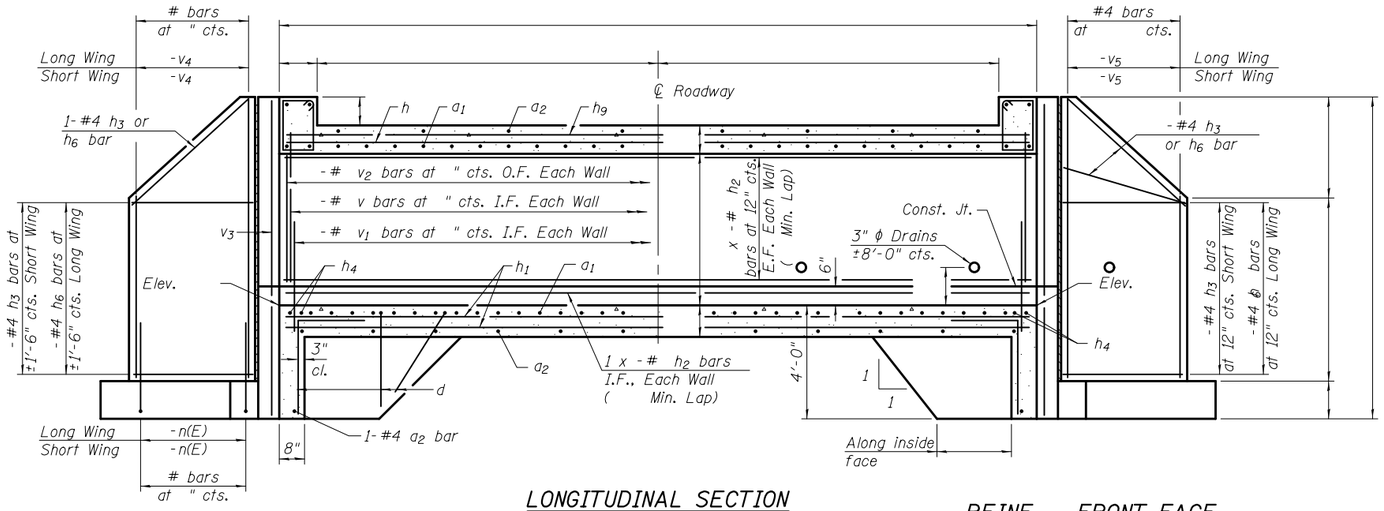

LONGITUDINAL SECTION

(Dimensions at Rt. L's to ℄ Roadway)

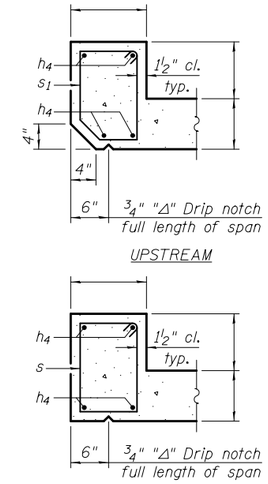

SECTION THRU HEADWALL

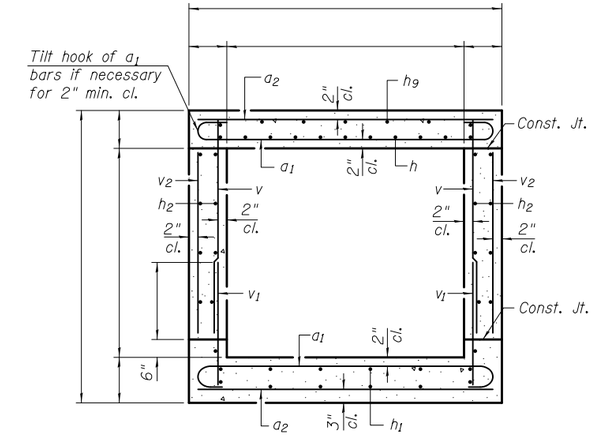

SECTION THRU BARREL

REINF. - BACK FACE

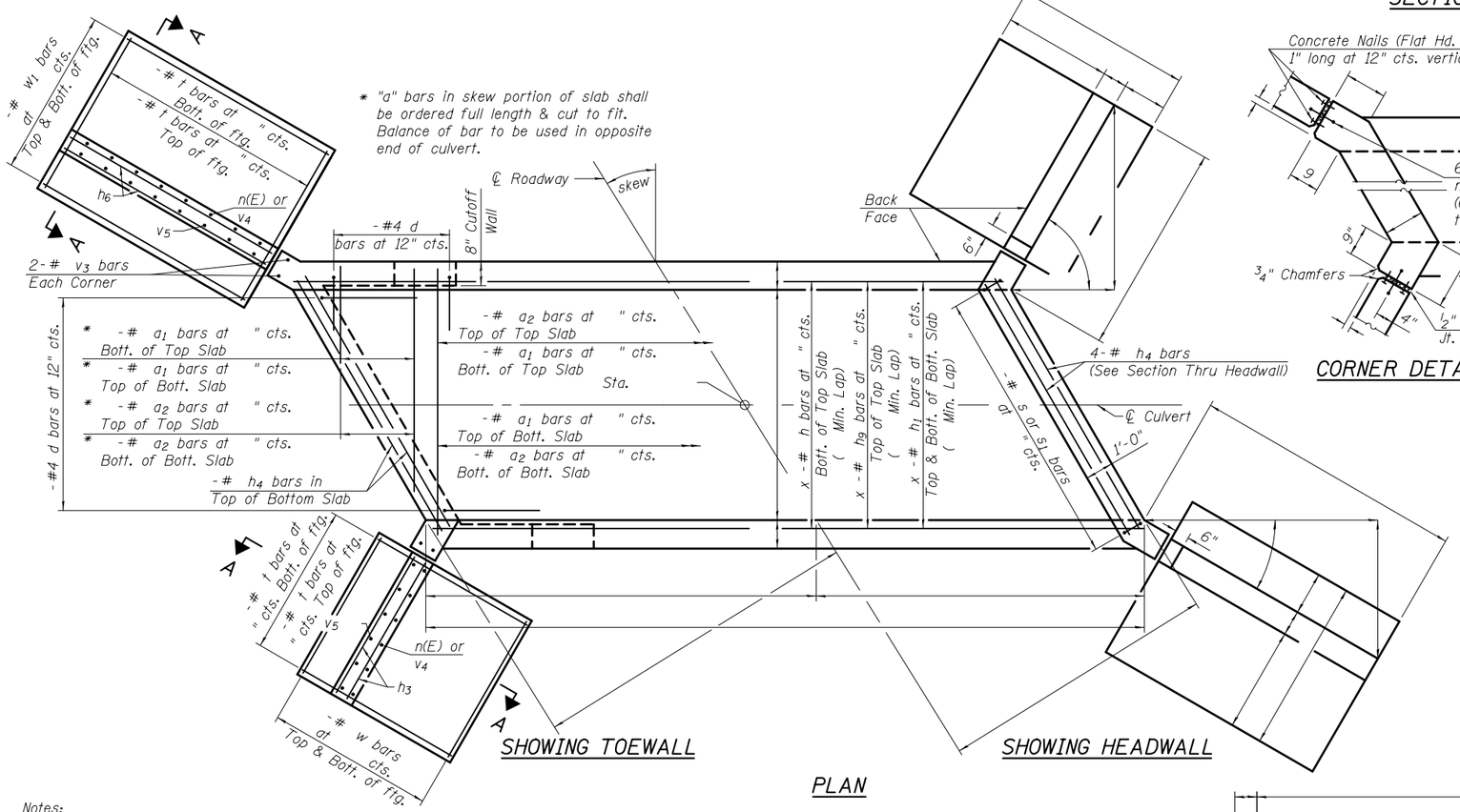

REINF. - FRONT FACE

PLAN

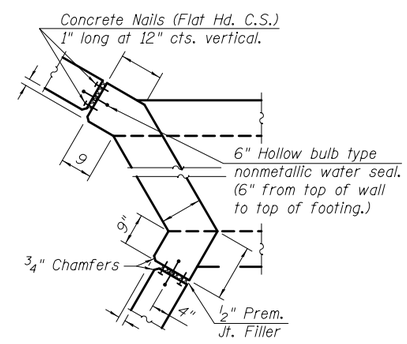

CORNER DETAIL

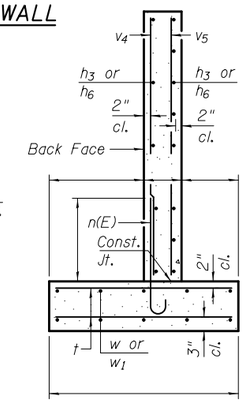

SECTION A-A

(Max. Applied Service Bearing Pressure = ksf)

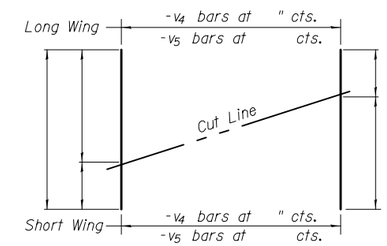

FIELD CUTTING DIAGRAM

Order bars shown full length. Cut as shown and use remainder of bars in opposite wingwall.

BILL OF MATERIAL

Bar	No.	Size	Length	Shape
a1		#		
a2		#		
d		#4	5'-5"	
h		#		
h1		#		
h2		#		
h3		#4		
h4		#		
h6		#4		
h9		#		
n(E)		#		
s		#		
s1		#		
t		#		
v		#		
v1		#		
v2		#		
v3		#		
v4		#		
v5		#		
w		#5		
w1		#5		
Concrete Box Culverts			Cu. Yd.	
Reinforcement Bars			Pound	
Reinforcement Bars, Epoxy Coated			Pound	

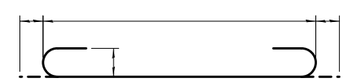

BAR a1

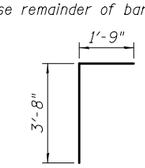

BAR d

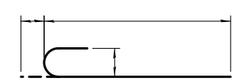

BAR n(E)

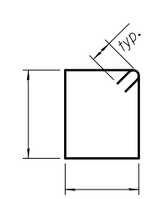

BAR s

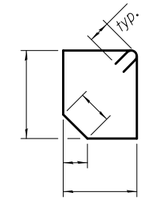

BAR s1

Notes:

Bars indicated thus 12 x 4-#5 etc. indicates 12 lines of bars with 4 lengths per line.

At the Contractor's option, a longer v_1 bar may be ordered to replace the v bar. No reduction in quantities shall be made for this substitution.

TSA-SC-TT-LS 10-15-2016

FILE NAME =	USER NAME =	DESIGNED -	REVISED
		CHECKED -	REVISED
	PLOT SCALE =	DRAWN -	REVISED
	PLOT DATE =	CHECKED -	REVISED

STATE OF ILLINOIS
DEPARTMENT OF TRANSPORTATION

CULVERT DETAILS
STRUCTURE NO.

SHEET NO. OF SHEETS

F.A. RTE.	SECTION	COUNTY	TOTAL SHEETS	SHEET NO.

CONTRACT NO.

ILLINOIS FED. AID PROJECT

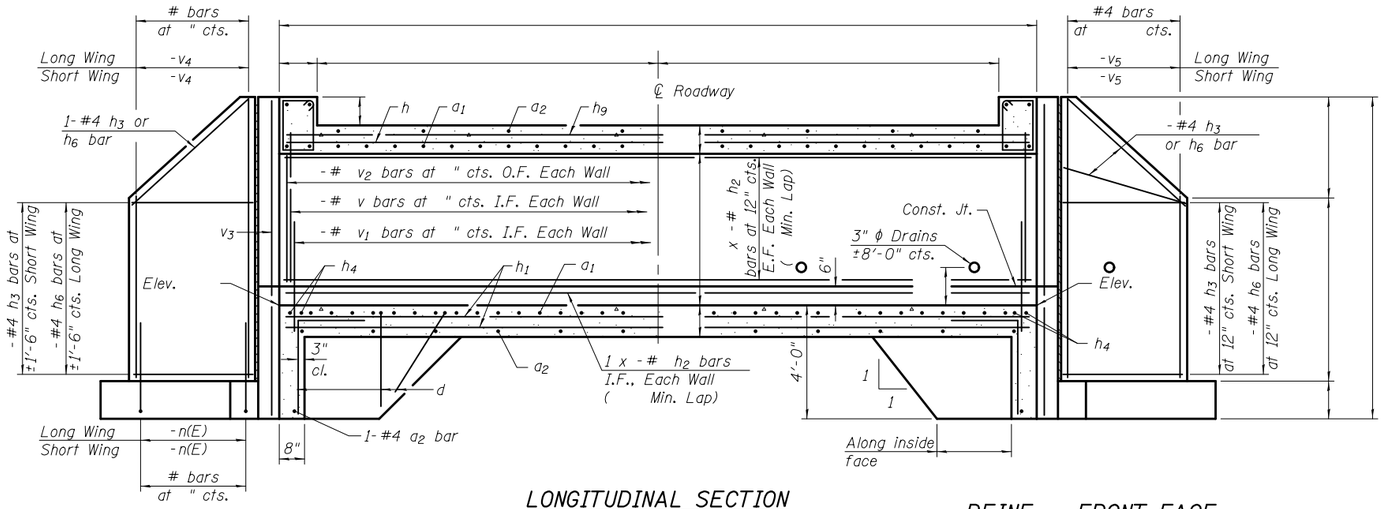

LONGITUDINAL SECTION

(Dimensions at Rt. L's to ℄ Roadway)

REINF. - BACK FACE

REINF. - FRONT FACE

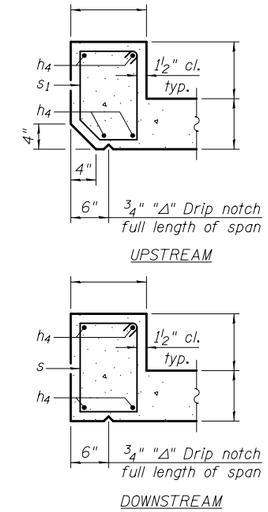

SECTION THRU HEADWALL

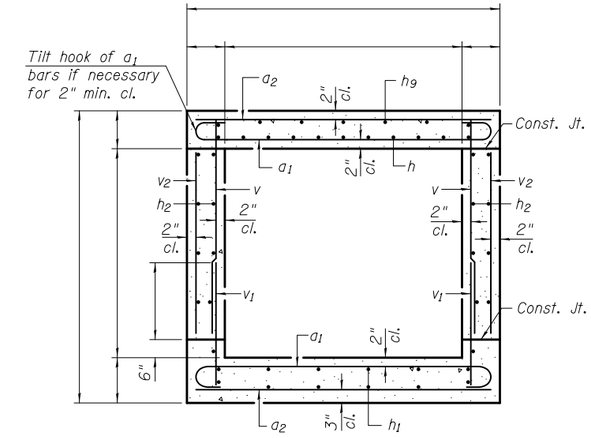

SECTION THRU BARREL

BILL OF MATERIAL

Bar	No.	Size	Length	Shape
a_1		#		
a_2		#		
d		#4	5'-5"	
h		#		
h_1		#		
h_2		#		
h_3		#4		
h_4		#		
h_6		#4		
h_9		#		
n(E)		#		
s		#		
s_1		#		
t		#		
v		#		
v_1		#		
v_2		#		
v_3		#		
v_4		#		
v_5		#		
w		#5		
w_1		#5		
Concrete Box Culverts		Cu. Yd.		
Reinforcement Bars		Pound		
Reinforcement Bars, Epoxy Coated		Pound		

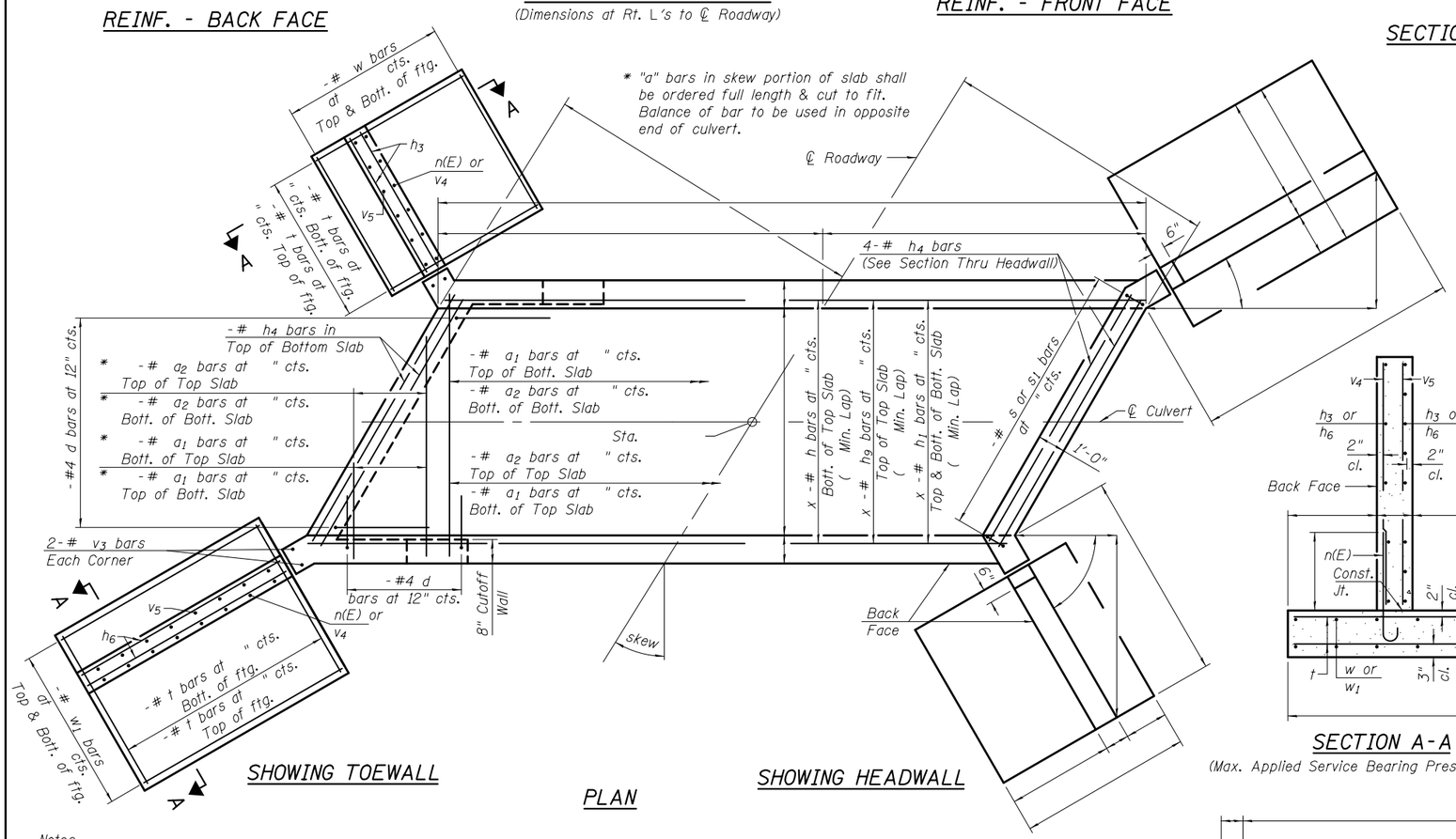

SHOWING TOEWALL

PLAN

SHOWING HEADWALL

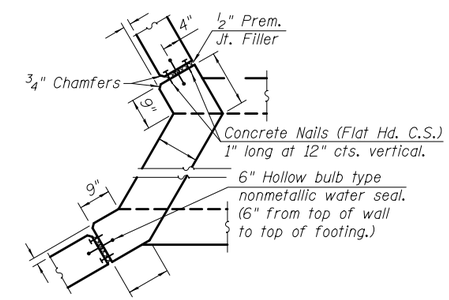

CORNER DETAIL

SECTION A-A

(Max. Applied Service Bearing Pressure = ksf)

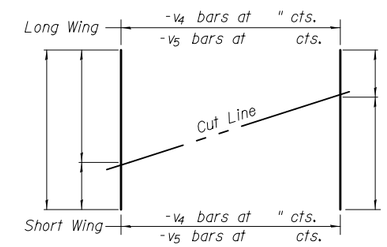

FIELD CUTTING DIAGRAM

Order bars shown full length. Cut as shown and use remainder of bars in opposite wingwall.

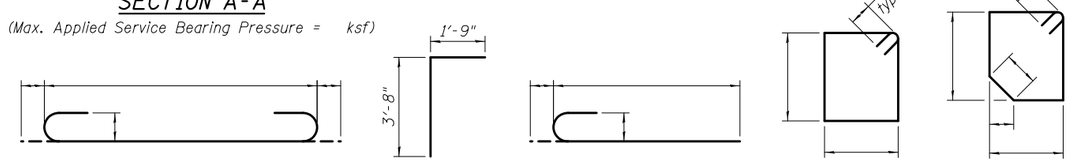

BAR a_1 BAR d BAR n(E) BAR s BAR s_1

Notes:

Bars indicated thus 12 x 4-#5 etc. indicates 12 lines of bars with 4 lengths per line.

At the Contractor's option, a longer v_1 bar may be ordered to replace the v bar. No reduction in quantities shall be made for this substitution.

TSA-SC-TT-RS 10-15-2016

FILE NAME =	USER NAME =	DESIGNED -	REVISED	STATE OF ILLINOIS DEPARTMENT OF TRANSPORTATION	CULVERT DETAILS STRUCTURE NO.	F.A. RTE.	SECTION	COUNTY	TOTAL SHEETS	SHEET NO.
		CHECKED -	REVISED							
	PLOT SCALE =	DRAWN -	REVISED					CONTRACT NO.		
	PLOT DATE =	CHECKED -	REVISED		SHEET NO. OF SHEETS		ILLINOIS	FED. AID PROJECT		

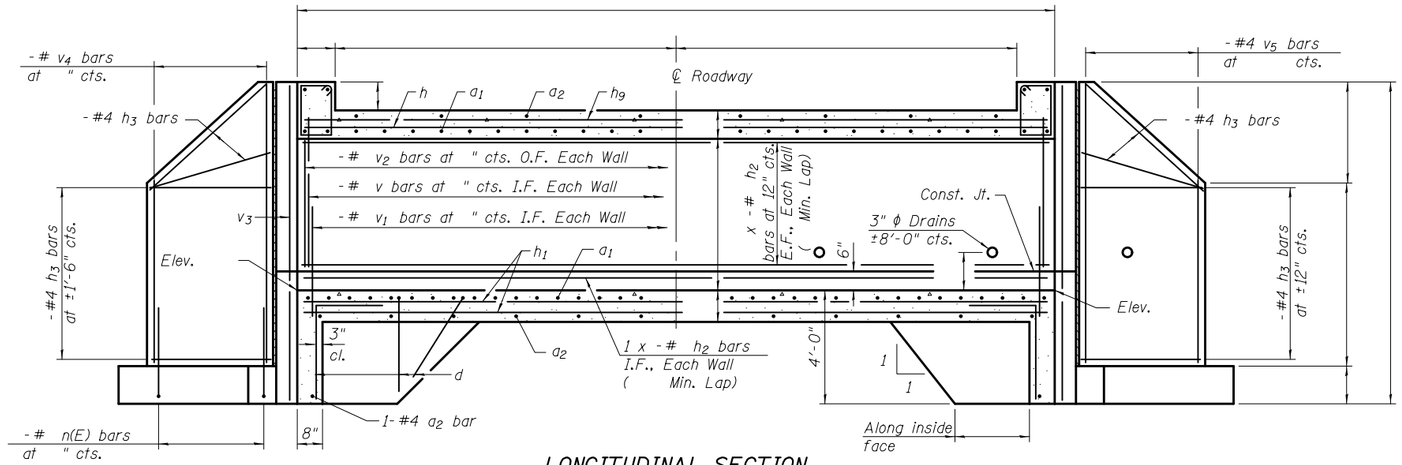

REINF. - BACK FACE

LONGITUDINAL SECTION

REINF. - FRONT FACE

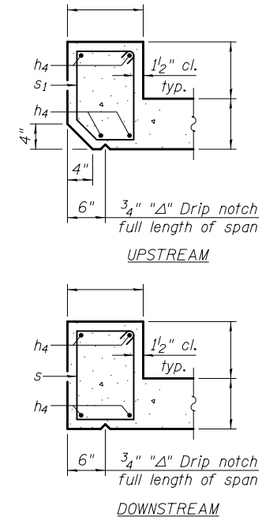

SECTION THRU HEADWALL

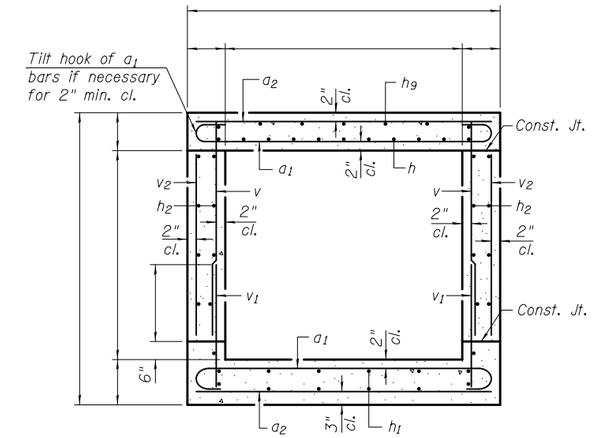

SECTION THRU BARREL

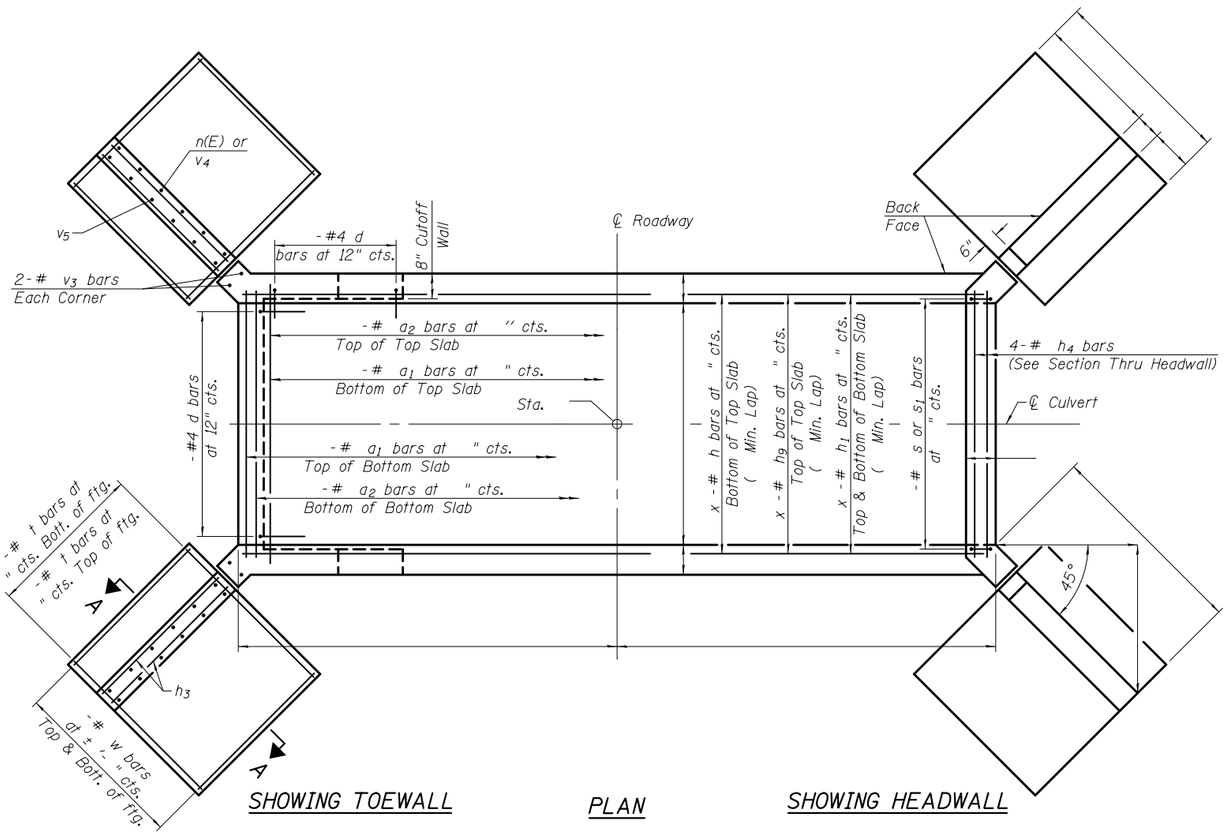

SHOWING TOEWALL

PLAN

SHOWING HEADWALL

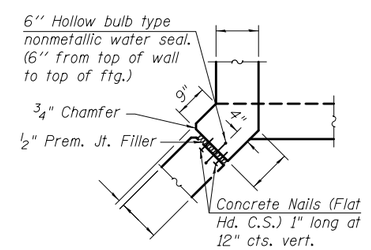

CORNER DETAIL

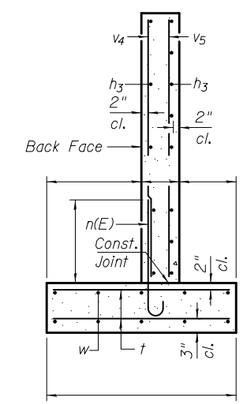

SECTION A-A

(Max. Applied Service Bearing Pressure = ksf)

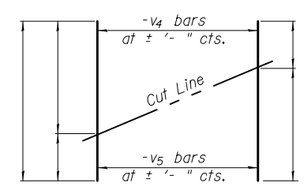

FIELD CUTTING DIAGRAM

Order bars shown full length. Cut as shown and use remainder of bars in opposite wingwall.

BILL OF MATERIAL

Bar	No.	Size	Length	Shape
a1		#		
a2		#		
d		#4	5'-5"	
h		#		
h1		#		
h2		#		
h3		#4		
h4		#		
h9		#		
n(E)		#		
s		#		
s1		#		
t		#		
v		#		
v1		#		
v2		#		
v3		#		
v4		#		
v5		#		
w		#5		
Concrete Box Culverts			Cu. Yd.	
Reinforcement Bars			Pound	
Reinforcement Bars, Epoxy Coated			Pound	

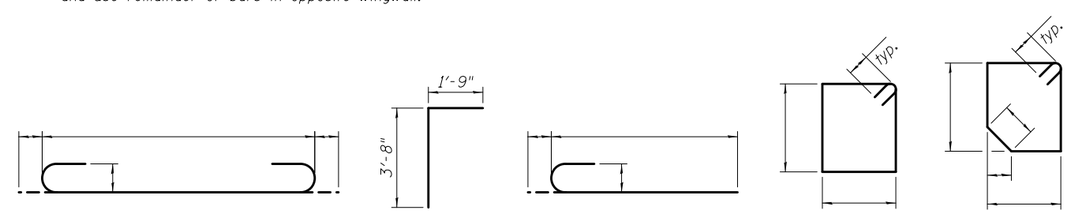

BAR a1 BAR d BAR n(E) BAR s BAR s1

Notes:

Bars indicated thus 12 x 4-#5 etc. indicates 12 lines of bars with 4 lengths per line.

At the Contractor's option, a longer v1 bar may be ordered to replace the v bar. No reduction in quantities shall be made for this substitution.

TSA-SC-TT-ZS 10-15-2016

FILE NAME =	USER NAME =	DESIGNED -	REVISED	STATE OF ILLINOIS DEPARTMENT OF TRANSPORTATION	CULVERT DETAILS STRUCTURE NO.	F.A. RTE.	SECTION	COUNTY	TOTAL SHEETS	SHEET NO.
		CHECKED -	REVISED							
	PLOT SCALE =	DRAWN -	REVISED					CONTRACT NO.		
	PLOT DATE =	CHECKED -	REVISED		SHEET NO. OF SHEETS		ILLINOIS	FED. AID PROJECT		

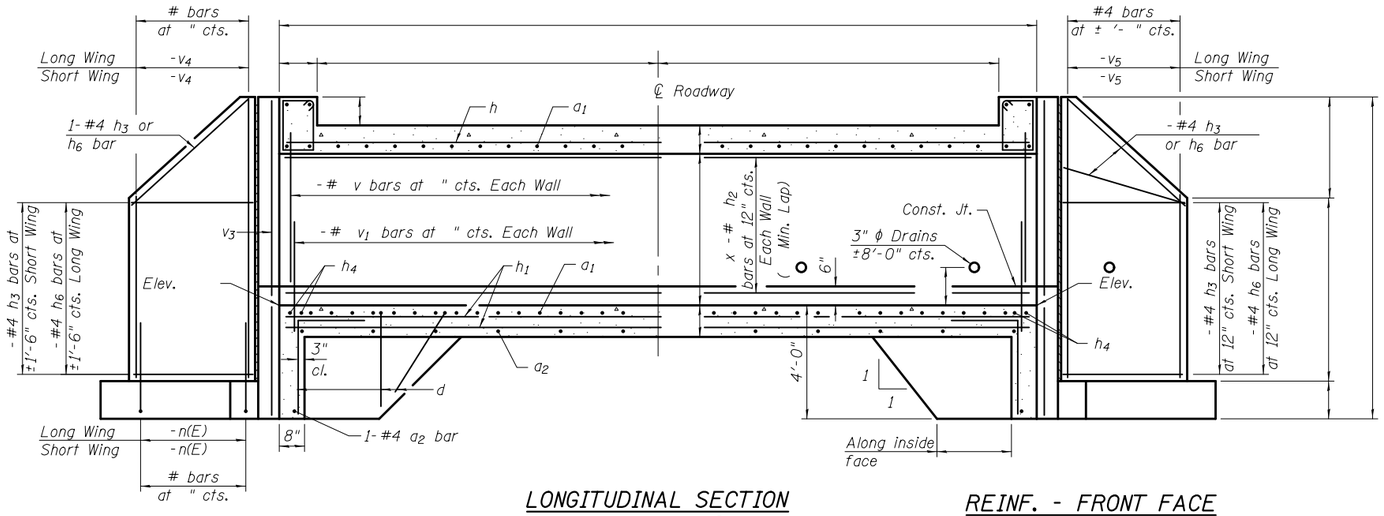

LONGITUDINAL SECTION

(Dimensions at Rt. L's to ℄ Roadway)

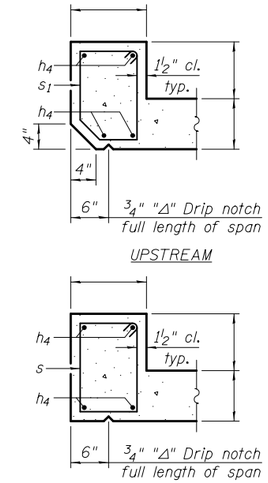

SECTION THRU HEADWALL

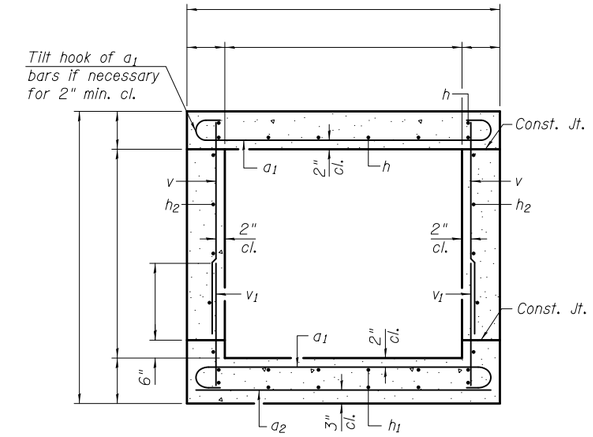

SECTION THRU BARREL

REINF. - BACK FACE

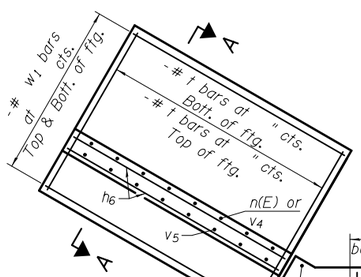

REINF. - FRONT FACE

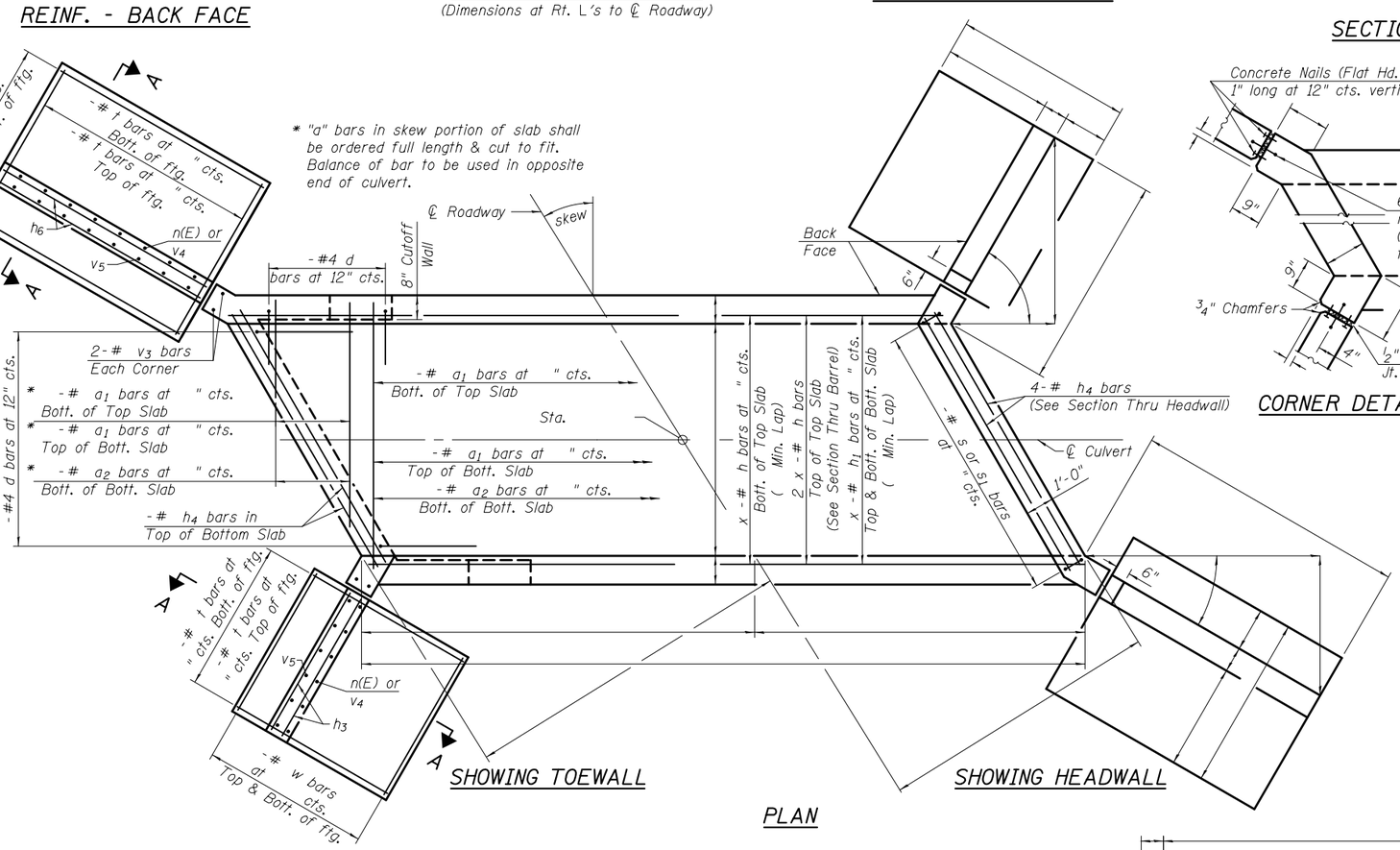

SHOWING TOEWALL

SHOWING HEADWALL

PLAN

CORNER DETAIL

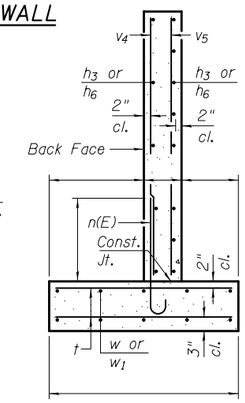

SECTION A-A

(Max. Applied Service Bearing Pressure = ksf)

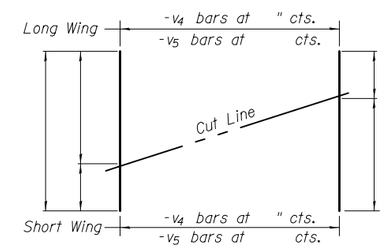

FIELD CUTTING DIAGRAM

Order bars shown full length. Cut as shown and use remainder of bars in opposite wingwall.

BILL OF MATERIAL

Bar	No.	Size	Length	Shape
a1		#		
a2		#		
d		#4	5'-5"	
h		#		
h1		#		
h2		#		
h3		#4		
h4		#		
h6		#4		
n(E)		#		
s		#		
s1		#		
t		#		
v		#		
v1		#		
v3		#		
v4		#		
v5		#		
w		#5		
w1		#5		
Concrete Box Culverts		Cu. Yd.		
Reinforcement Bars		Pound		
Reinforcement Bars, Epoxy Coated		Pound		

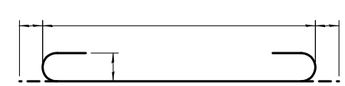

BAR a1

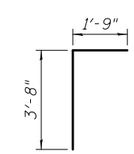

BAR d

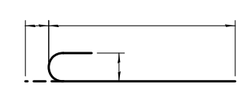

BAR n(E)

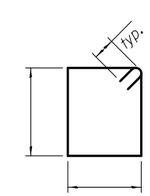

BAR s

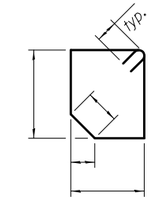

BAR s1

Notes:
Bars indicated thus 12 x 4-#5 etc. indicates 12 lines of bars with 4 lengths per line.
At the Contractor's option, a longer v1 bar may be ordered to replace the v bar. No reduction in quantities shall be made for this substitution.

TSB-SB-TT-LS 10-15-2016

FILE NAME =	USER NAME =	DESIGNED -	REVISED
		CHECKED -	REVISED
	PLOT SCALE =	DRAWN -	REVISED
	PLOT DATE =	CHECKED -	REVISED

STATE OF ILLINOIS
DEPARTMENT OF TRANSPORTATION

CULVERT DETAILS
STRUCTURE NO.
SHEET NO. OF SHEETS

F.A. RTE.	SECTION	COUNTY	TOTAL SHEETS	SHEET NO.

CONTRACT NO.
ILLINOIS FED. AID PROJECT

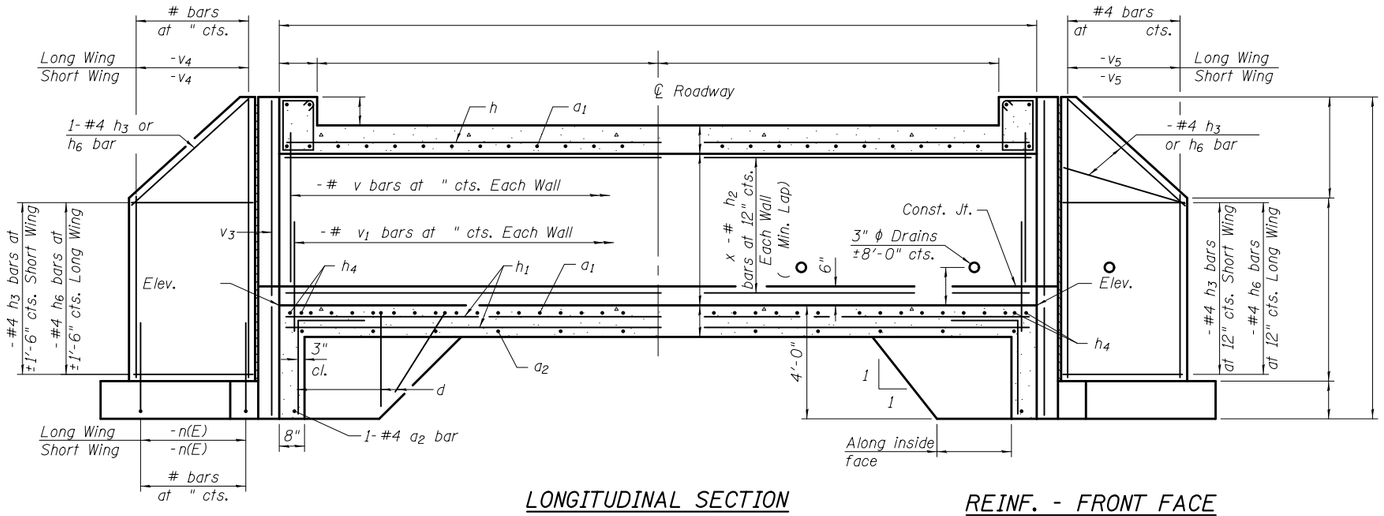

REINF. - BACK FACE

LONGITUDINAL SECTION

(Dimensions at Rt. ∠'s to ℄ Roadway)

REINF. - FRONT FACE

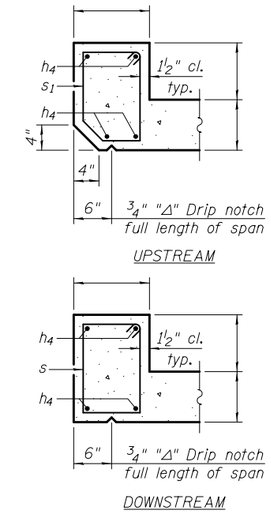

SECTION THRU HEADWALL

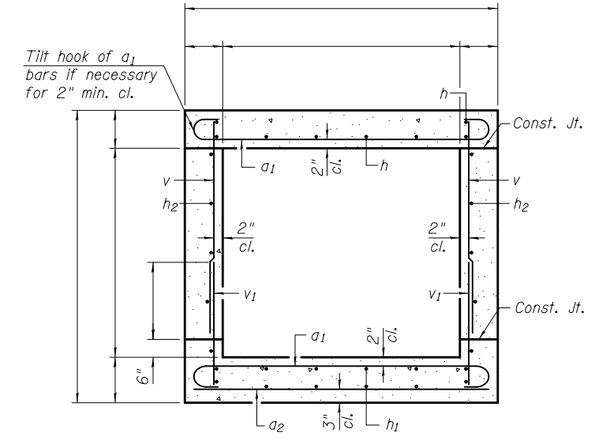

SECTION THRU BARREL

BILL OF MATERIAL

Bar	No.	Size	Length	Shape
a_1		#		
a_2		#		
d		#4	5'-5"	
h		#		
h_1		#		
h_2		#		
h_3		#4		
h_4		#		
h_6		#4		
n(E)		#		
s		#		
s_1		#		
t		#		
v		#		
v_1		#		
v_3		#		
v_4		#		
v_5		#		
w		#5		
w_1		#5		
Concrete Box Culverts		Cu. Yd.		
Reinforcement Bars		Pound		
Reinforcement Bars, Epoxy Coated		Pound		

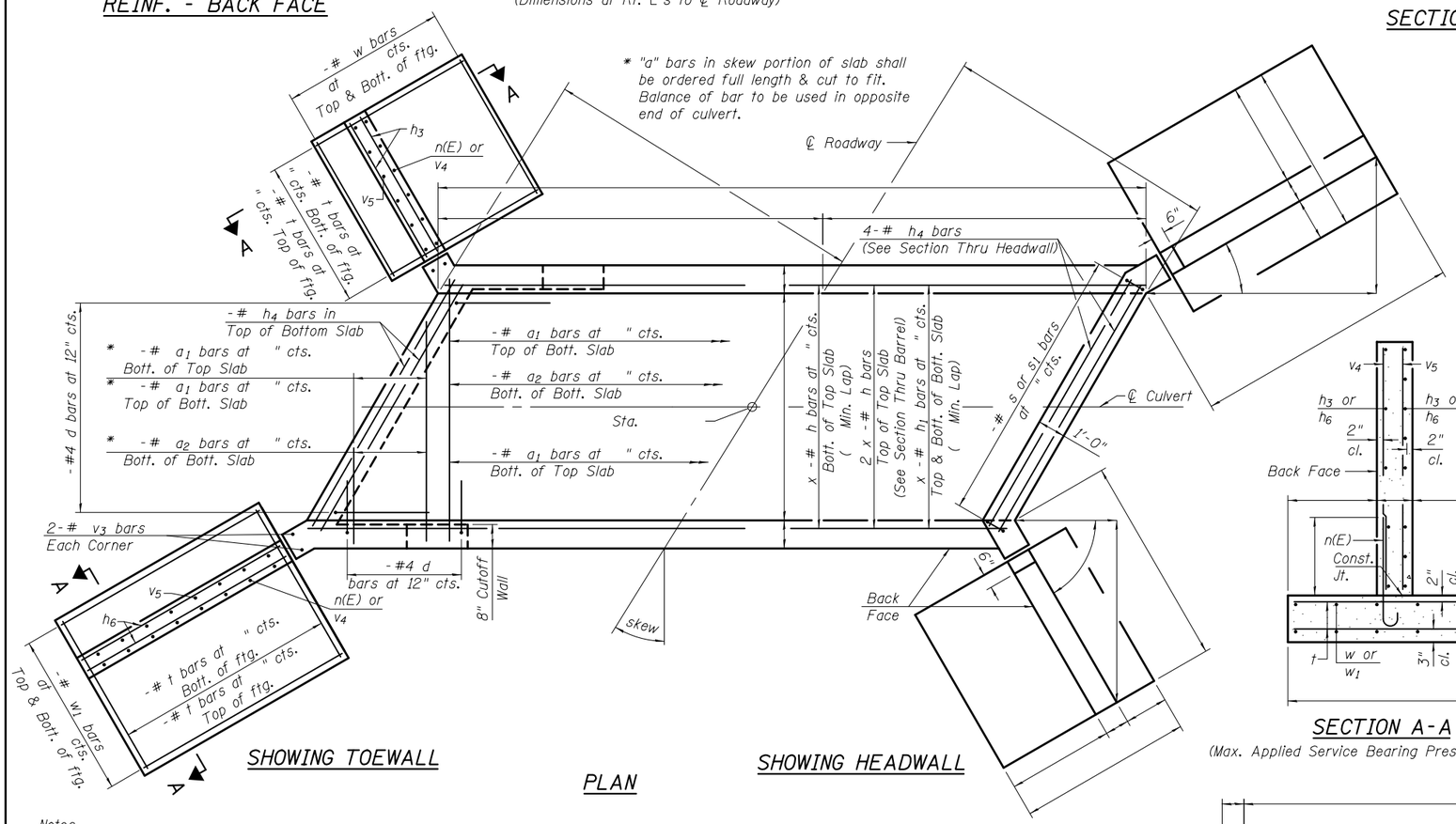

SHOWING TOEWALL

PLAN

SHOWING HEADWALL

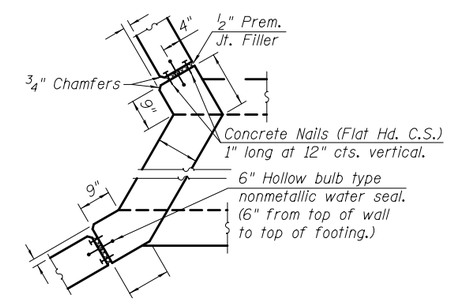

CORNER DETAIL

SECTION A-A

(Max. Applied Service Bearing Pressure = ksf)

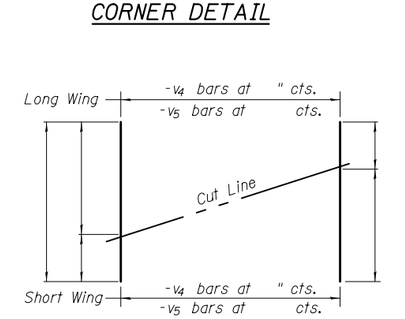

FIELD CUTTING DIAGRAM

Order bars shown full length. Cut as shown and use remainder of bars in opposite wingwall.

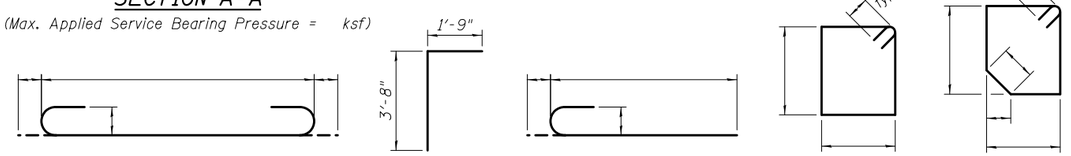

BAR a_1 BAR d BAR n(E) BAR s BAR s_1

Notes:

Bars indicated thus 12 x 4-#5 etc. indicates 12 lines of bars with 4 lengths per line.

At the Contractor's option, a longer v_1 bar may be ordered to replace the v bar. No reduction in quantities shall be made for this substitution.

TSB-SB-TT-RS 10-15-2016

FILE NAME =	USER NAME =	DESIGNED -	REVISED	STATE OF ILLINOIS DEPARTMENT OF TRANSPORTATION	CULVERT DETAILS STRUCTURE NO.	F.A. RTE.	SECTION	COUNTY	TOTAL SHEETS	SHEET NO.
		CHECKED -	REVISED							
	PLOT SCALE =	DRAWN -	REVISED					CONTRACT NO.		
	PLOT DATE =	CHECKED -	REVISED		SHEET NO. OF SHEETS		ILLINOIS	FED. AID PROJECT		

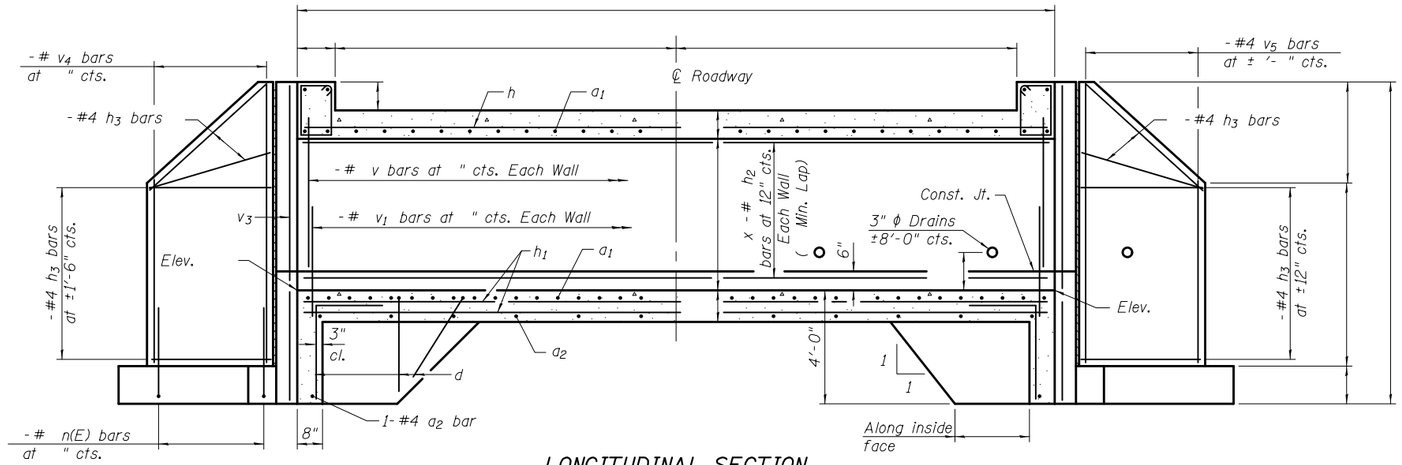

REINF. - BACK FACE

LONGITUDINAL SECTION

REINF. - FRONT FACE

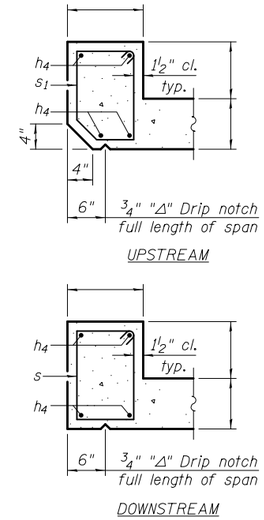

SECTION THRU HEADWALL

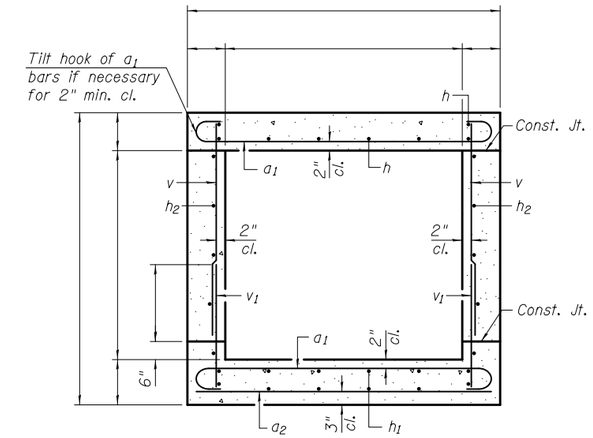

SECTION THRU BARREL

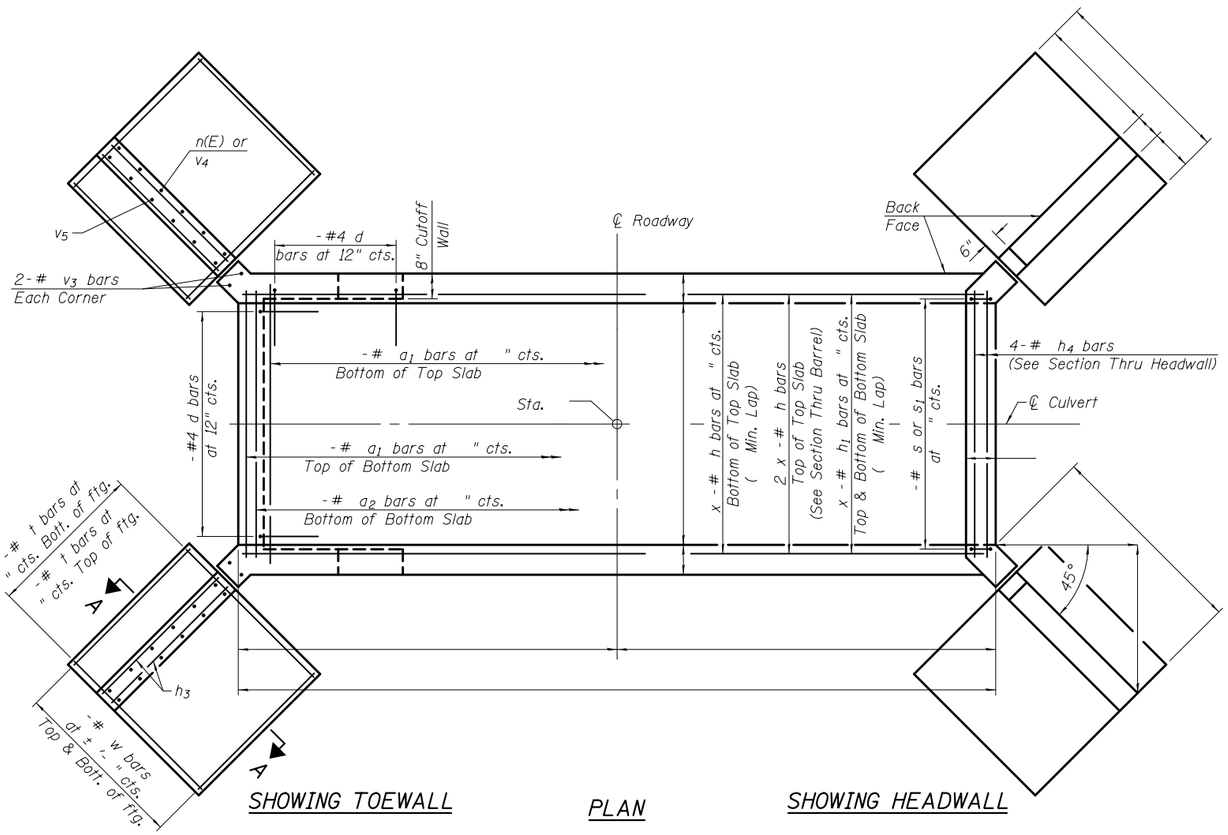

SHOWING TOEWALL

PLAN

SHOWING HEADWALL

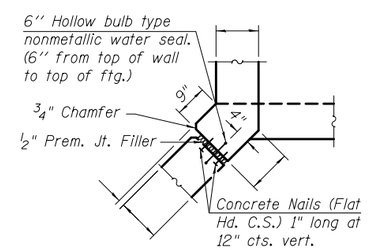

CORNER DETAIL

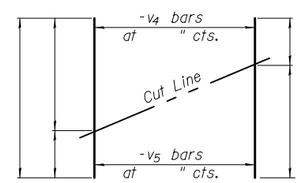

FIELD CUTTING DIAGRAM

Order bars shown full length. Cut as shown and use remainder of bars in opposite wingwall.

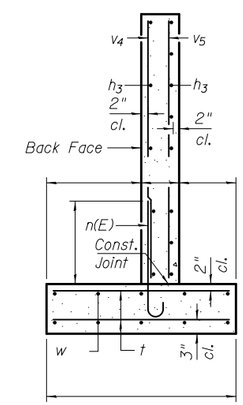

SECTION A-A

(Max. Applied Service Bearing Pressure = ksf)

BILL OF MATERIAL

Bar	No.	Size	Length	Shape
a_1		#		
a_2		#		
d		#4	5'-5"	
h		#		
h_1		#		
h_2		#		
h_3		#4		
h_4		#		
n(E)		#		
s		#		
s_1		#		
t		#		
v		#		
v_1		#		
v_3		#		
v_4		#		
v_5		#		
w		#5		
Concrete Box Culverts			Cu. Yd.	
Reinforcement Bars			Pound	
Reinforcement Bars, Epoxy Coated			Pound	

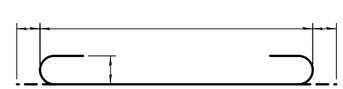

BAR a_1

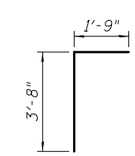

BAR d

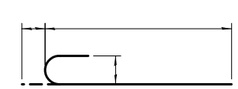

BAR n(E)

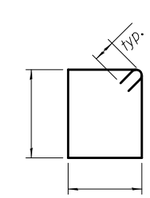

BAR s

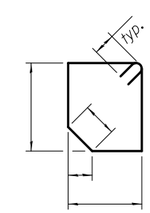

BAR s_1

Notes:
Bars indicated thus 12 x 4-#5 etc. indicates 12 lines of bars with 4 lengths per line.
At the Contractor's option, a longer v_1 bar may be ordered to replace the v bar. No reduction in quantities shall be made for this substitution.

TSB-SB-TT-ZS 10-15-2016

FILE NAME =	USER NAME =	DESIGNED -	REVISED	STATE OF ILLINOIS DEPARTMENT OF TRANSPORTATION	CULVERT DETAILS STRUCTURE NO.	F.A. RTE.	SECTION	COUNTY	TOTAL SHEETS	SHEET NO.
		CHECKED -	REVISED							
	PLOT SCALE =	DRAWN -	REVISED					CONTRACT NO.		
	PLOT DATE =	CHECKED -	REVISED		SHEET NO. OF SHEETS		ILLINOIS	FED. AID PROJECT		

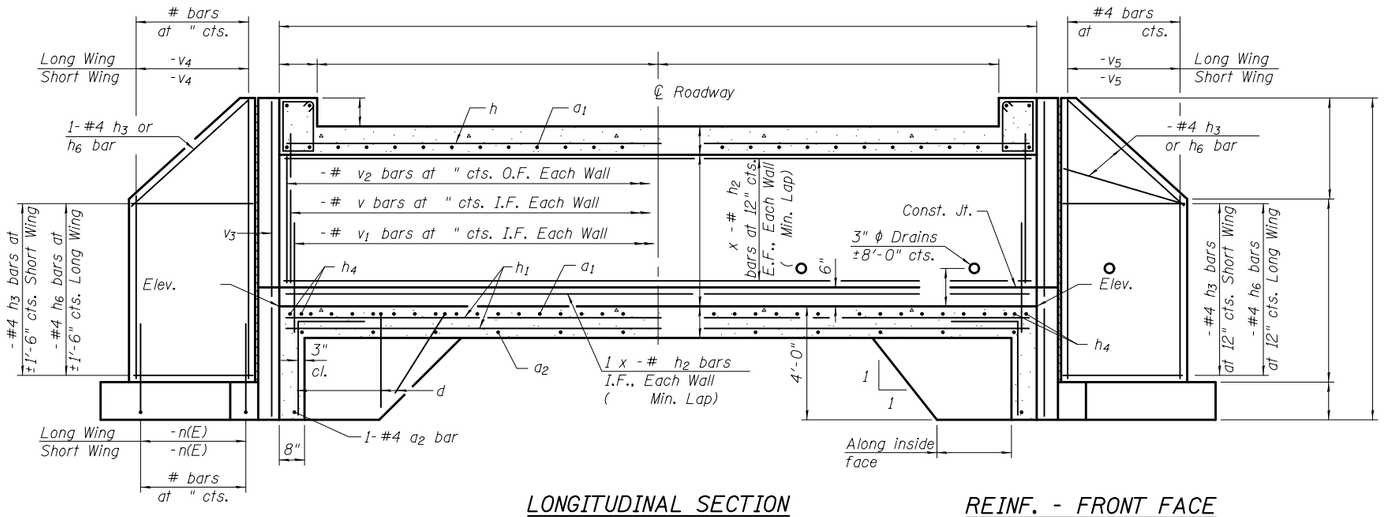

LONGITUDINAL SECTION

(Dimensions at Rt. L's to ℄ Roadway)

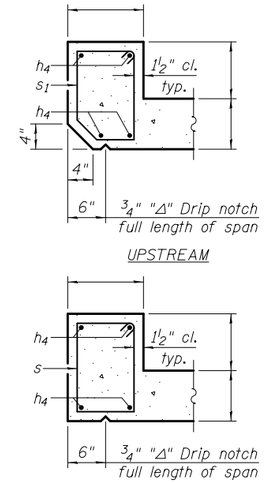

SECTION THRU HEADWALL

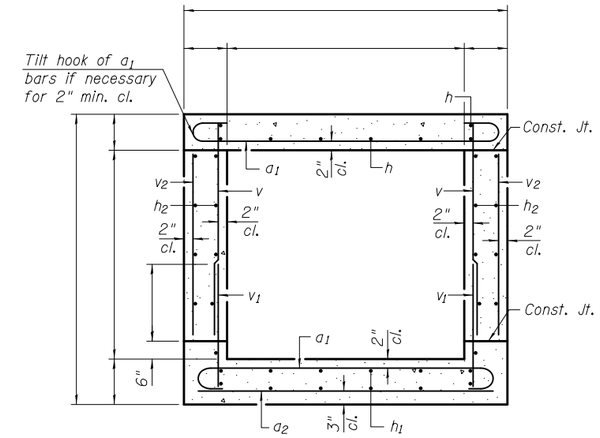

SECTION THRU BARREL

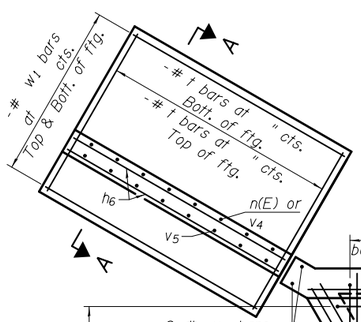

REINF. - BACK FACE

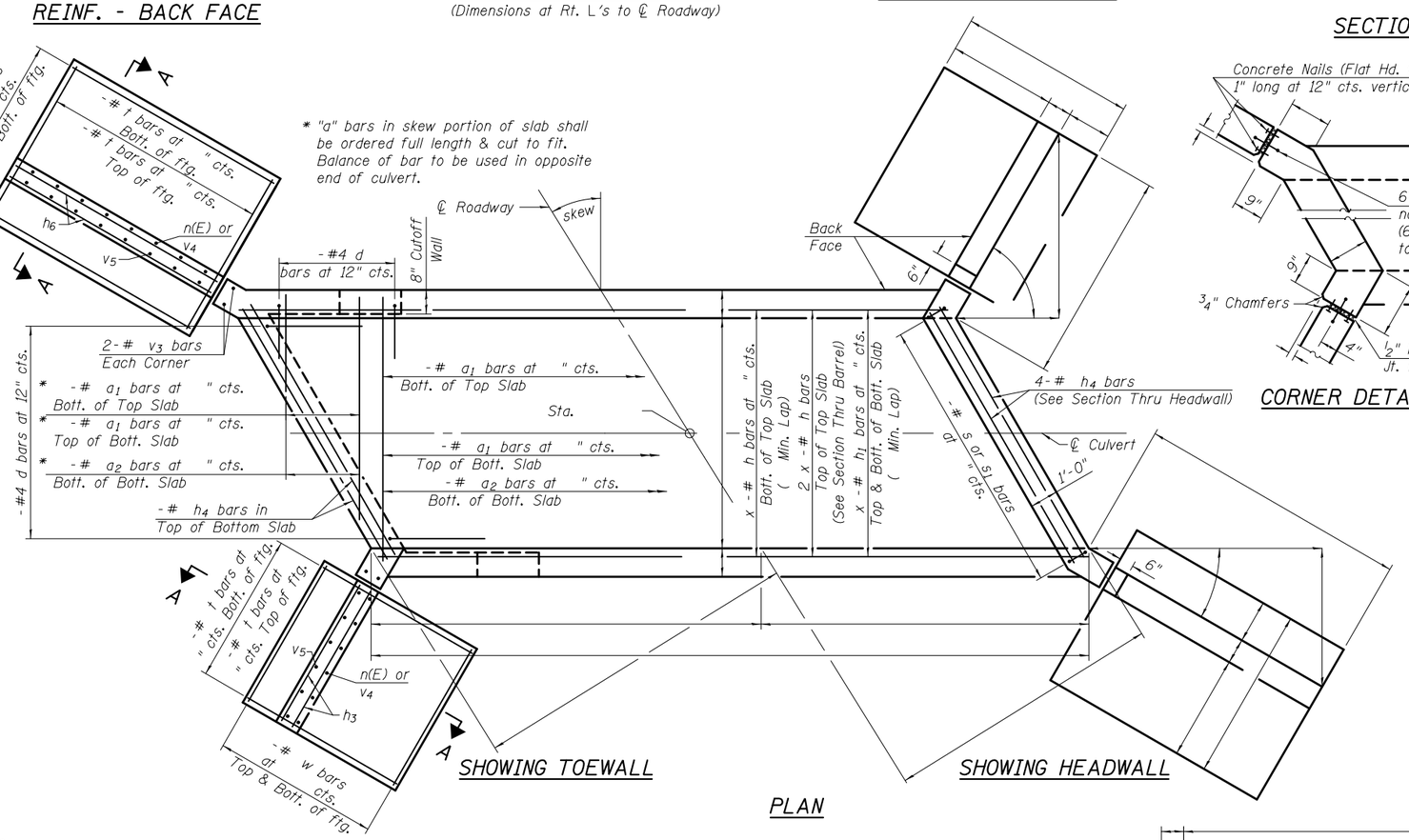

REINF. - FRONT FACE

SHOWING TOEWALL

SHOWING HEADWALL

PLAN

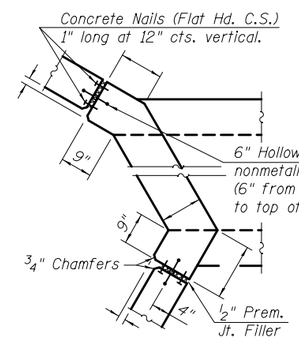

CORNER DETAIL

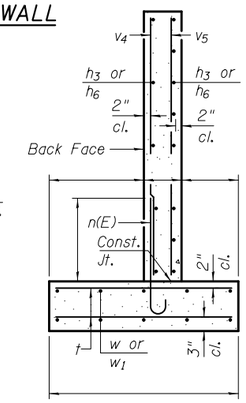

SECTION A-A

(Max. Applied Service Bearing Pressure = ksf)

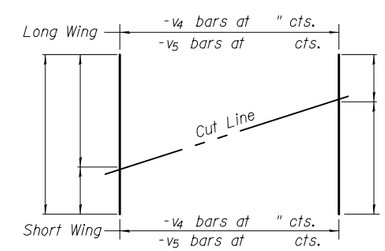

FIELD CUTTING DIAGRAM

Order bars shown full length. Cut as shown and use remainder of bars in opposite wingwall.

BILL OF MATERIAL

Bar	No.	Size	Length	Shape
a1		#		
a2		#		
d		#4	5'-5"	
h		#		
h1		#		
h2		#		
h3		#4		
h4		#		
h6		#4		
n(E)		#		
s		#		
s1		#		
t		#		
v		#		
v1		#		
v2		#		
v3		#		
v4		#		
v5		#		
w		#5		
w1		#5		
Concrete Box Culverts			Cu. Yd.	
Reinforcement Bars			Pound	
Reinforcement Bars, Epoxy Coated			Pound	

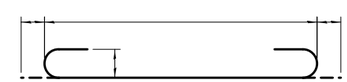

BAR a1

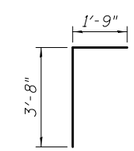

BAR d

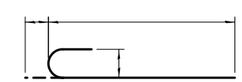

BAR n(E)

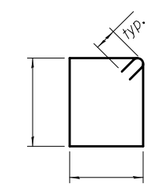

BAR s

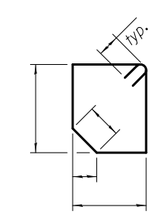

BAR s1

Notes:

Bars indicated thus 12 x 4-#5 etc. indicates 12 lines of bars with 4 lengths per line.

At the Contractor's option, a longer v_1 bar may be ordered to replace the v bar. No reduction in quantities shall be made for this substitution.

TSB-SC-TT-LS 10-15-2016

FILE NAME =	USER NAME =	DESIGNED -	REVISED
		CHECKED -	REVISED
	PLOT SCALE =	DRAWN -	REVISED
	PLOT DATE =	CHECKED -	REVISED

STATE OF ILLINOIS
DEPARTMENT OF TRANSPORTATION

CULVERT DETAILS
STRUCTURE NO.
SHEET NO. OF SHEETS

F.A. RTE.	SECTION	COUNTY	TOTAL SHEETS	SHEET NO.

CONTRACT NO.

ILLINOIS FED. AID PROJECT

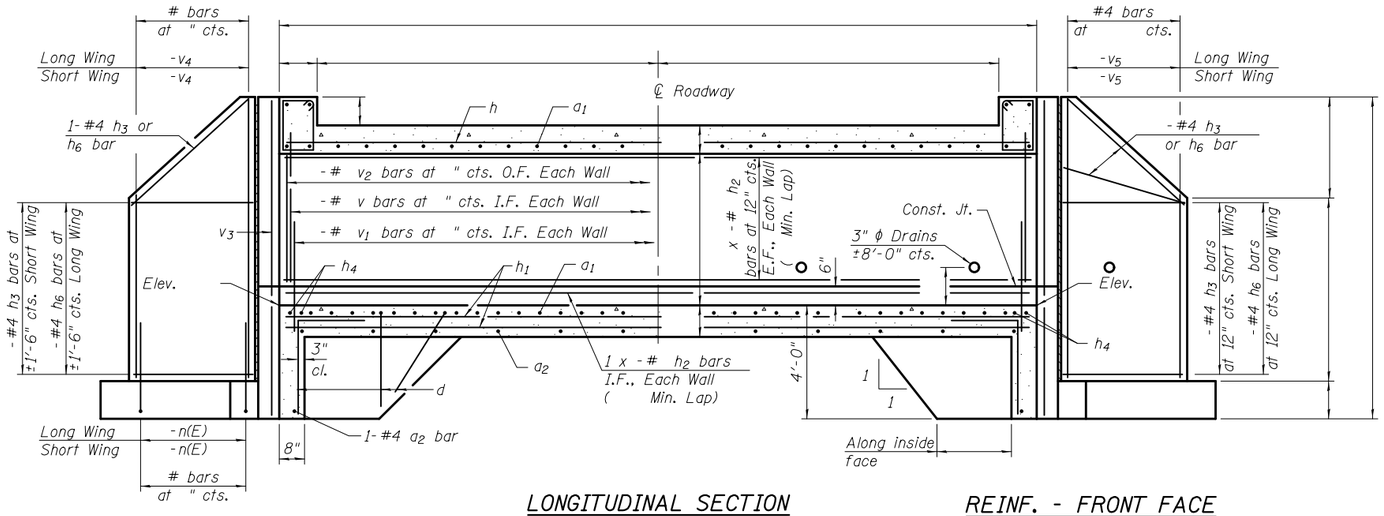

REINF. - BACK FACE

LONGITUDINAL SECTION

(Dimensions at Rt. L's to ℄ Roadway)

REINF. - FRONT FACE

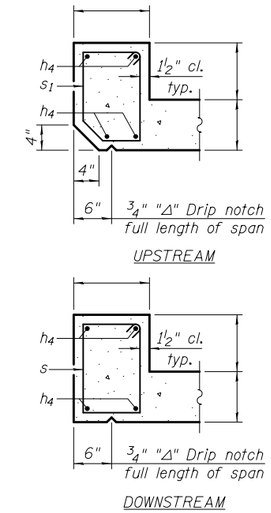

SECTION THRU HEADWALL

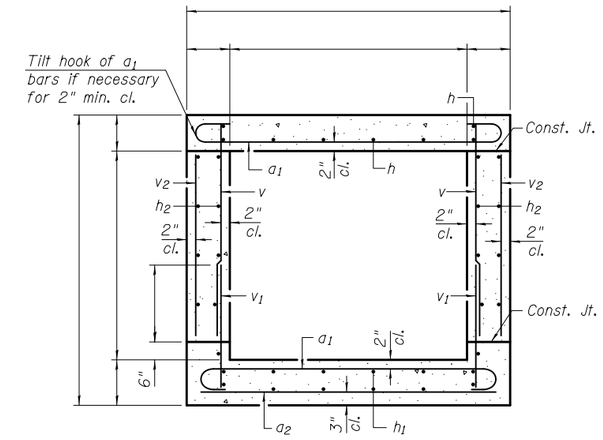

SECTION THRU BARREL

BILL OF MATERIAL

Bar	No.	Size	Length	Shape
a_1		#		
a_2		#		
d		#4	5'-5"	
h		#		
h_1		#		
h_2		#		
h_3		#4		
h_4		#		
h_6		#4		
n(E)		#		
s		#		
s_1		#		
t		#		
v		#		
v_1		#		
v_2		#		
v_3		#		
v_4		#		
v_5		#		
w		#5		
w_1		#5		
Concrete Box Culverts		Cu. Yd.		
Reinforcement Bars		Pound		
Reinforcement Bars, Epoxy Coated		Pound		

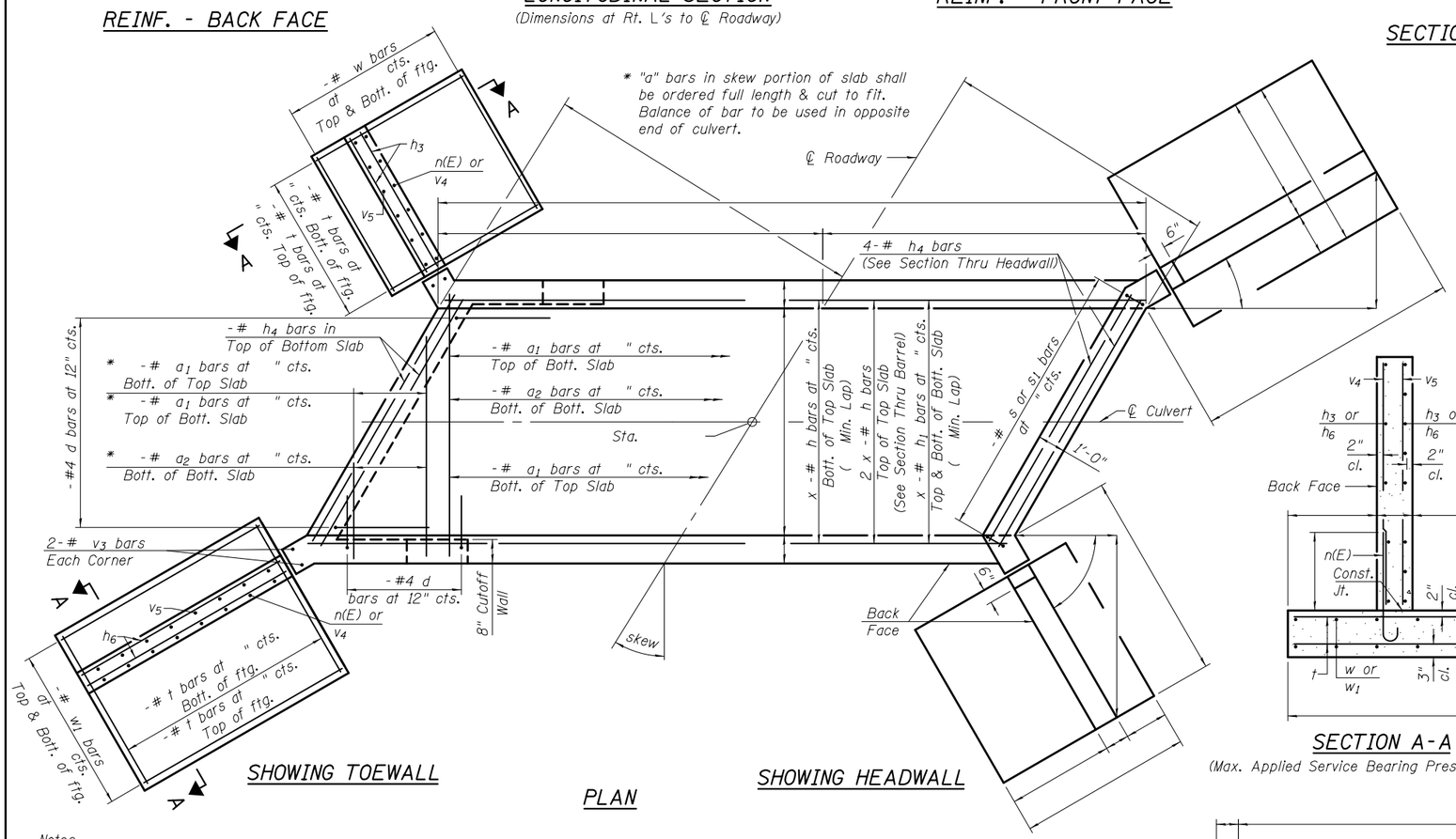

SHOWING TOEWALL

PLAN

SHOWING HEADWALL

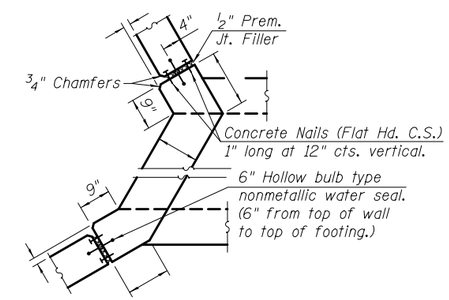

CORNER DETAIL

SECTION A-A

(Max. Applied Service Bearing Pressure = ksf)

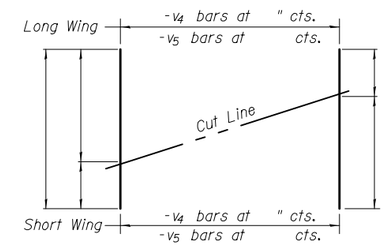

FIELD CUTTING DIAGRAM

Order bars shown full length. Cut as shown and use remainder of bars in opposite wingwall.

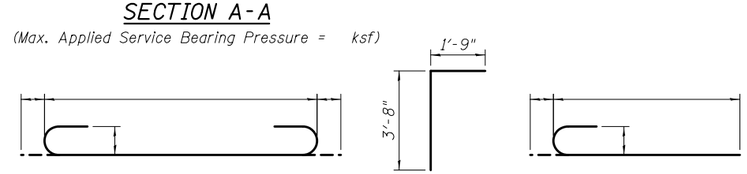

BAR a_1 BAR d BAR n(E) BAR s BAR s_1

Notes:

Bars indicated thus 12 x 4-#5 etc. indicates 12 lines of bars with 4 lengths per line.

At the Contractor's option, a longer v_1 bar may be ordered to replace the v bar. No reduction in quantities shall be made for this substitution.

TSB-SC-TT-RS 10-15-2016

FILE NAME =	USER NAME =	DESIGNED -	REVISED	STATE OF ILLINOIS DEPARTMENT OF TRANSPORTATION	CULVERT DETAILS STRUCTURE NO.	F.A. RTE.	SECTION	COUNTY	TOTAL SHEETS	SHEET NO.
		CHECKED -	REVISED							
	PLOT SCALE =	DRAWN -	REVISED					CONTRACT NO.		
	PLOT DATE =	CHECKED -	REVISED		SHEET NO. OF SHEETS		ILLINOIS	FED. AID PROJECT		

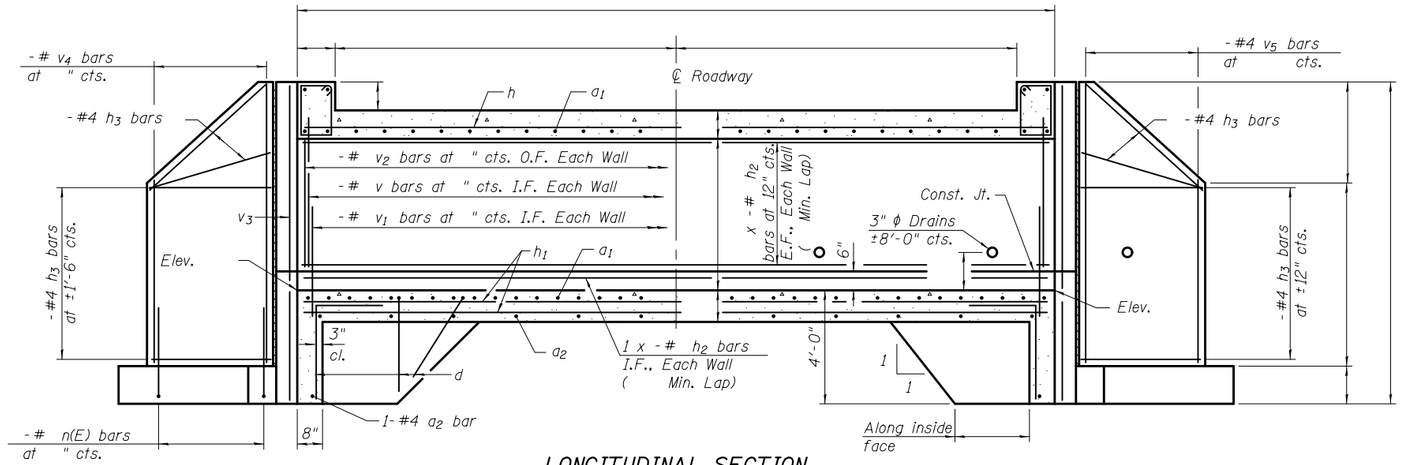

REINF. - BACK FACE

LONGITUDINAL SECTION

REINF. - FRONT FACE

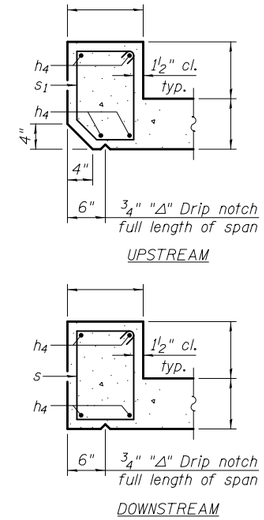

SECTION THRU HEADWALL

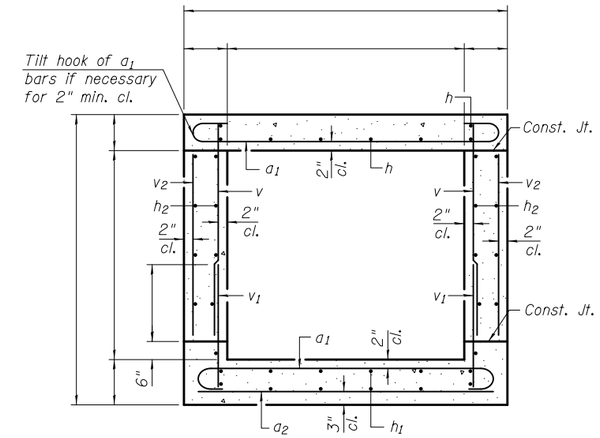

SECTION THRU BARREL

BILL OF MATERIAL

Bar	No.	Size	Length	Shape
a_1		#		
a_2		#		
d		#4	5'-5"	
h		#		
h_1		#		
h_2		#		
h_3		#4		
h_4		#		
n(E)		#		
s		#		
s_1		#		
t		#		
v		#		
v_1		#		
v_2		#		
v_3		#		
v_4		#		
v_5		#		
w		#5		
Concrete Box Culverts			Cu. Yd.	
Reinforcement Bars			Pound	
Reinforcement Bars, Epoxy Coated			Pound	

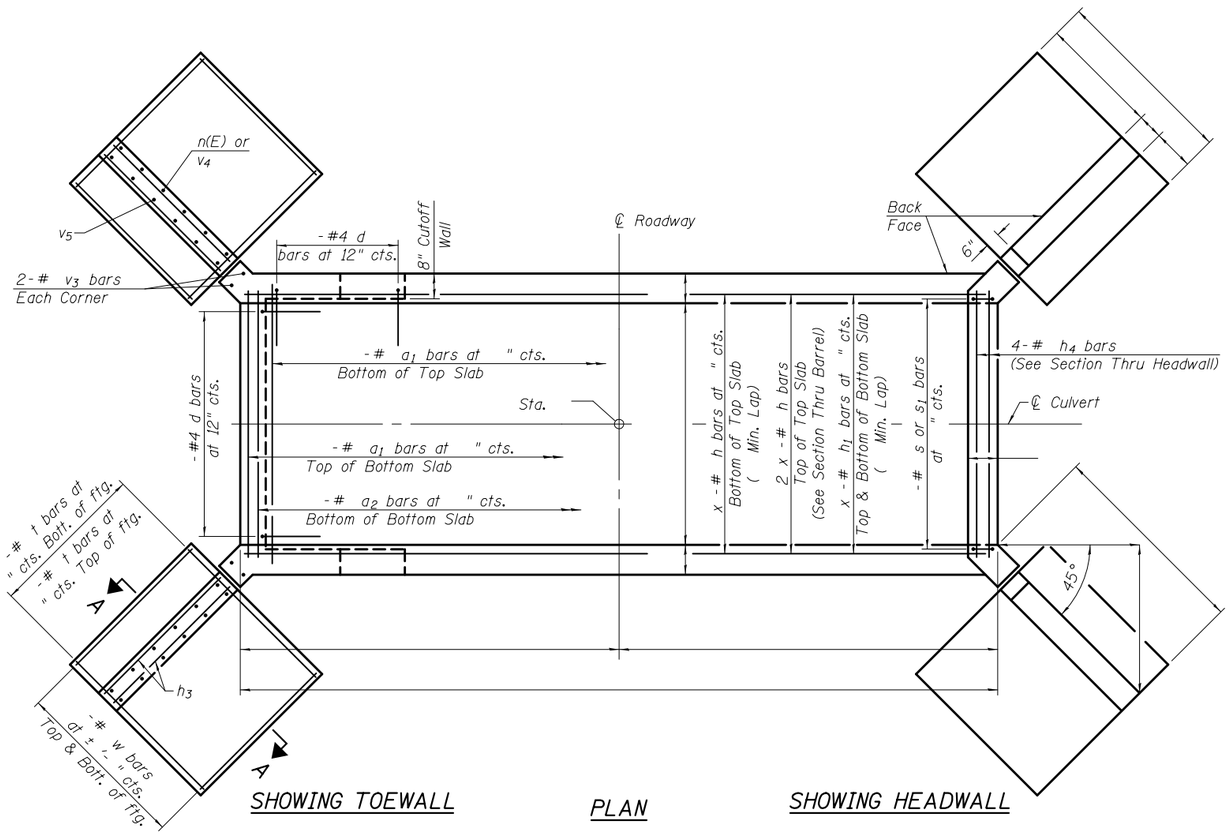

SHOWING TOEWALL

PLAN

SHOWING HEADWALL

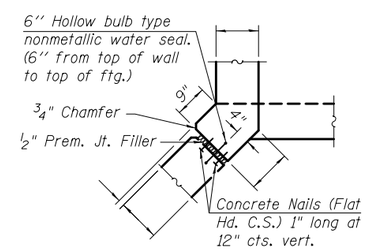

CORNER DETAIL

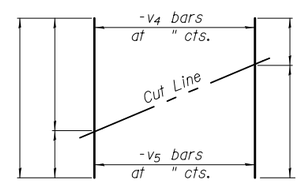

FIELD CUTTING DIAGRAM

Order bars shown full length. Cut as shown and use remainder of bars in opposite wingwall.

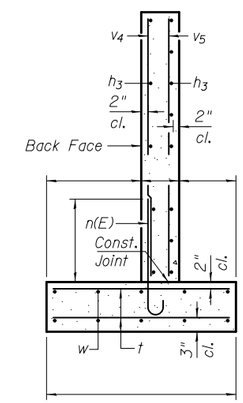

SECTION A-A

(Max. Applied Service Bearing Pressure = ksf)

Notes:

Bars indicated thus 12 x 4-#5 etc. indicates 12 lines of bars with 4 lengths per line.

At the Contractor's option, a longer v_1 bar may be ordered to replace the v bar. No reduction in quantities shall be made for this substitution.

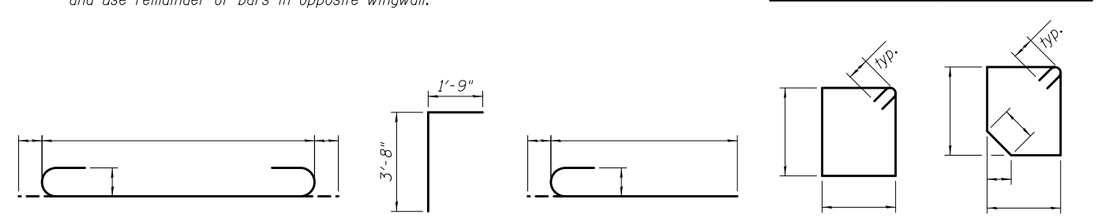

BAR a_1 BAR d BAR n(E) BAR s BAR s_1

TSB-SC-TT-ZS 10-15-2016

FILE NAME =	USER NAME =	DESIGNED -	REVISED	STATE OF ILLINOIS DEPARTMENT OF TRANSPORTATION	CULVERT DETAILS STRUCTURE NO.	F.A. RTE.	SECTION	COUNTY	TOTAL SHEETS	SHEET NO.
		CHECKED -	REVISED							
	PLOT SCALE =	DRAWN -	REVISED					CONTRACT NO.		
	PLOT DATE =	CHECKED -	REVISED		SHEET NO. OF SHEETS		ILLINOIS	FED. AID PROJECT		