CELL / MODEL NAME	DESCRIPTION	DATE
BAW-A-1	Breakaway wide flange steel signpost details	06/01/2012
BAW-A-2	Breakaway wide flange steel signpost tables	06/01/2012

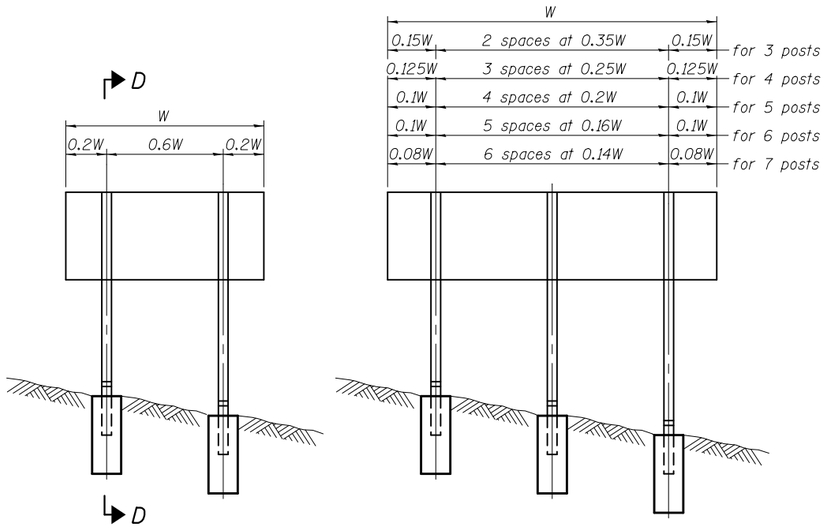

ELEVATION

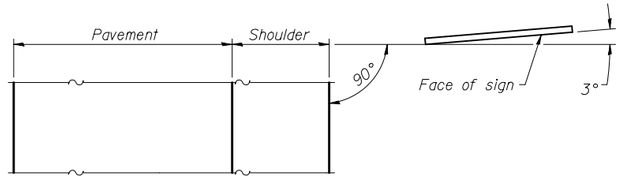

LOCATION SKETCH

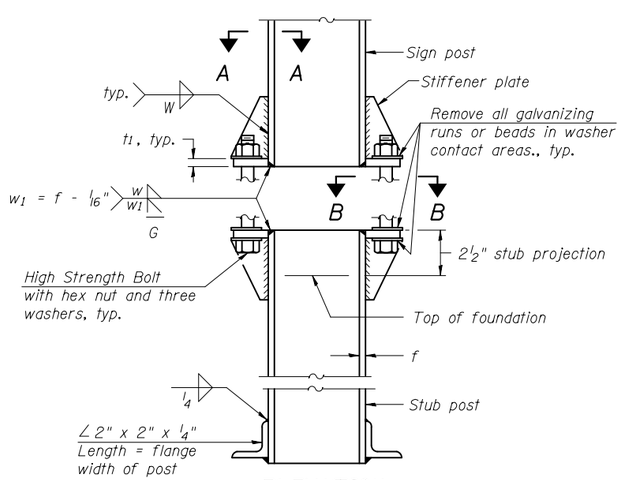

ELEVATION
SIGN POST & STUB POST

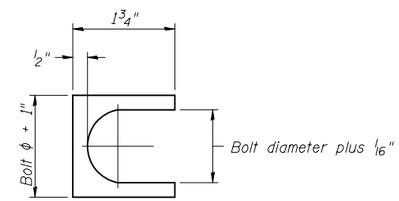

SHIM DETAIL

Furnish two 0.01" thick and two 0.03" thick stainless steel or brass (ASTM B36) shims per post.

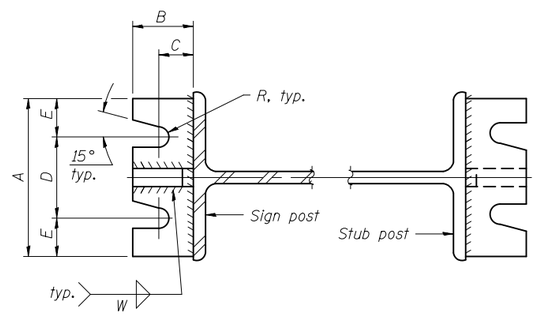

SECTION A-A

SECTION B-B

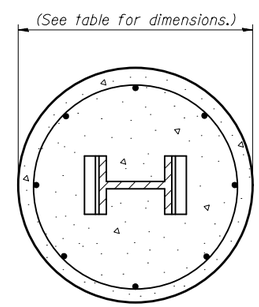

SECTION C-C

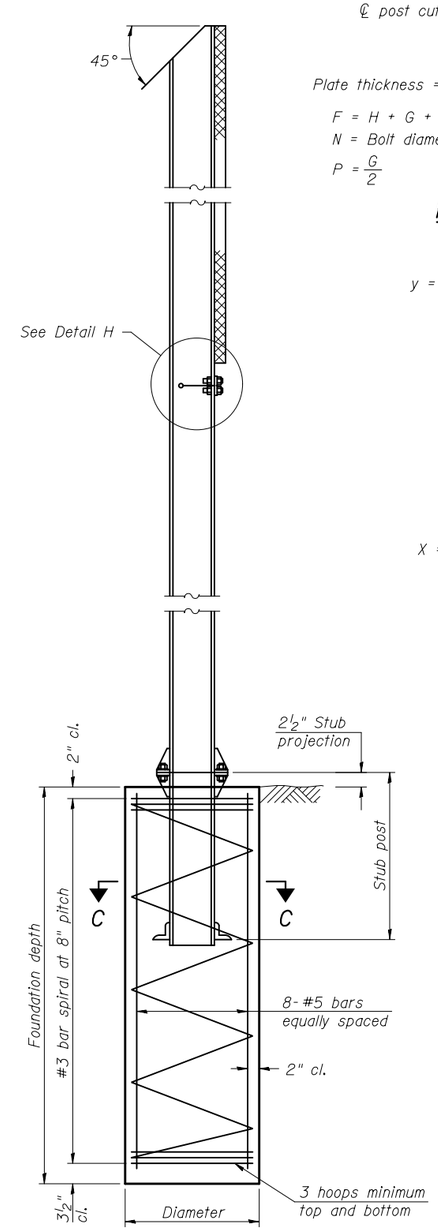

SECTION D-D

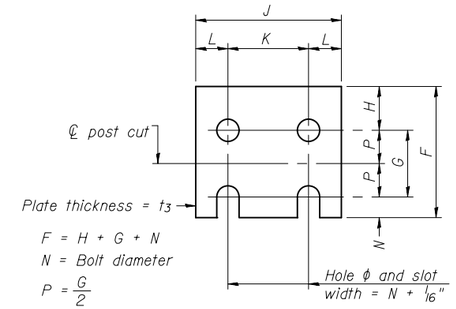

FUSE PLATE DETAIL

(Install with notches down.)

FUSE PLATE DATA		
N = Bolt Diameter	G	H
1/2"	2"	1 1/8"
5/8"	2 1/4"	1 1/4"
3/4"	2 1/2"	1 3/8"
7/8"	2 3/4"	1 1/2"
1"	3"	1 5/8"
1 1/8"	3 1/4"	1 3/4"
1 1/4"	3 1/2"	1 7/8"

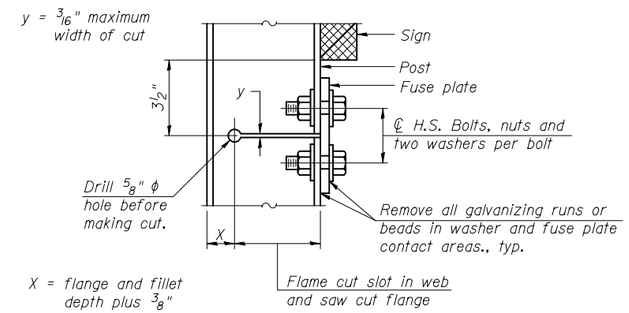

DETAIL H

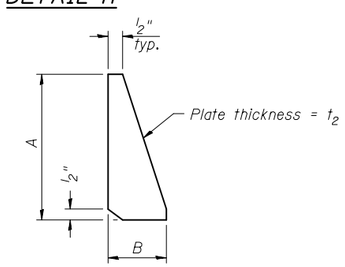

STIFFENER PLATE DETAIL

Diameter

GENERAL NOTES

Posts shall be plumbed by using shims with post-to-stub post connection bolts snug tight only. Final tightening of all High Strength Bolts shall be in accordance with Article 727.05 and threads at the junction of the bolt and nut shall be burred or center punched to prevent the nut from loosening.

LOADING: 80 m.p.h. wind with 30% gust factor, normal to sign.

DESIGN STRESSES:
Structural steel - 20,000 p.s.i.
Reinforcing steel - 20,000 p.s.i.
Concrete - 1,400 p.s.i.
Footing soil pressure - 2,000 p.s.f.

After fabrication, the post, fuse plate and upper 6", min. of the stub post shall be hot-dip galvanized in accordance with AASHTO M111. All bolts, nuts and washers shall be hot-dip galvanized in accordance with AASHTO M232.

Work this sheet with Base Sheet BAW-A-2.

BAW-A-1 6-1-12

(Sheet 1 of 2)

FILE NAME =	USER NAME =	DESIGNED -	REVISED
		CHECKED -	REVISED
	PLOT SCALE =	DRAWN -	REVISED
	PLOT DATE =	CHECKED -	REVISED

STATE OF ILLINOIS
DEPARTMENT OF TRANSPORTATION

BREAK-AWAY WIDE FLANGE
STEEL SIGN POST DETAILS

SHEET NO. OF SHEETS

F.A. RTE.	SECTION	COUNTY	TOTAL SHEETS	SHEET NO.

CONTRACT NO.

ILLINOIS FED. AID PROJECT

POST	CONCRETE FOUNDATION TABLE								POST TO STUB POST CONNECTION DATA										FUSE PLATE DATA			
	Foundation			Reinforcement				Stub Post														
	Diameter	* Minimum Depth	Concrete (1) cu. yds.)	Vertical Bars Length	Bar Spirals Diameter	Bar Spirals Length	lbs. (2)	Length	Bolt Size	A	B	C	D	E	t_1	t_2	R	W	J	K	L	t_3
W6x9	2'-0"	6'-0"	0.70	5'-9"	1'-8½"	79'-0"	78	2'-3"	⅝" x 3¼"	6"	2¼"	1¼"	3½"	1¼"	¾"	½"	11/32"	¼"	4"	2¼"	⅞"	¼"
W6x15	2'-0"	6'-0"	0.70	5'-9"	1'-8½"	79'-0"	78	2'-6"	⅝" x 3¼"	6"	2¼"	1¼"	3½"	1¼"	¾"	½"	11/32"	¼"	6"	3½"	1¼"	⅜"
W8x18	2'-0"	6'-0"	0.70	5'-9"	1'-8½"	79'-0"	78	2'-6"	¾" x 3¾"	6"	2½"	1⅜"	3¼"	1⅜"	1"	½"	13/32"	5/16"	5¼"	2¾"	1¼"	⅜"
W10x22	2'-6"	6'-6"	1.18	6'-3"	2'-2½"	105'-0"	92	3'-0"	¾" x 3¾"	6"	2½"	1⅜"	3¼"	1⅜"	1"	½"	13/32"	5/16"	5¾"	2¾"	1½"	½"
W10x26	2'-6"	7'-0"	1.27	6'-9"	2'-2½"	112'-0"	98	3'-0"	⅞" x 4"	7"	2¾"	1½"	4"	1½"	1"	¾"	15/32"	⅜"	5¾"	2¾"	1½"	⅝"
W12x26	2'-6"	7'-9"	1.41	7'-6"	2'-2½"	119'-0"	107	3'-0"	⅞" x 4"	7"	2¾"	1½"	4"	1½"	1"	¾"	15/32"	⅜"	6½"	3½"	1½"	⅝"
W14x30	3'-0"	7'-3"	1.90	7'-0"	2'-8½"	145'-0"	113	3'-0"	⅞" x 4"	7"	2¾"	1½"	4"	1½"	1"	¾"	15/32"	⅜"	6¾"	3½"	1⅝"	½"
W14x38	3'-0"	8'-0"	2.09	7'-9"	2'-8½"	153'-0"	122	3'-6"	1" x 4½"	7½"	3"	1¾"	4"	1¾"	1¼"	¾"	17/32"	⅜"	6¾"	3½"	1⅝"	½"
W16x45	3'-0"	8'-6"	2.23	8'-3"	2'-8½"	162'-0"	130	3'-6"	1" x 4½"	7½"	3"	1¾"	4"	1¾"	1¼"	¾"	17/32"	⅜"	7"	3½"	1¾"	½"

*Dimensional changes required for varying site conditions shall be approved by the Engineer.

POST	FUSE PLATE BOLT SIZE — Sign Height																				
	4'-0"	5'-0"	6'-0"	7'-0"	8'-0"	9'-0"	10'-0"	11'-0"	12'-0"	13'-0"	14'-0"	15'-0"	16'-0"	17'-0''	18'-0''	19'-0''	20'-0''	21'-0''	22'-0''	23'-0''	24'-0''
W6x9	½" x 1½"	½" x 1½"	½" x 1½"	½" x 1½"	—	—	—	—	—	—	—	—	—	—	—	—	—	—	—	—	—
W6x15	½" x 1¾"	½" x 1¾"	½" x 1¾"	⅝" x 2"	⅝" x 2"	¾" x 2"	¾" x 2"	¾" x 2"	¾" x 2"	—	—	—	—	—	—	—	—	—	—	—	—
W8x18	½" x 1¾"	½" x 1¾"	½" x 1¾"	½" x 1¾"	⅝" x 2"	⅝" x 2"	¾" x 2"	¾" x 2"	¾" x 2"	¾" x 2"	—	—	—	—	—	—	—	—	—	—	—
W10x22	½" x 2"	½" x 2"	½" x 2"	½" x 2"	½" x 2"	⅝" x 2"	⅝" x 2"	¾" x 2¼"	¾" x 2¼"	¾" x 2¼"	¾" x 2¼"	¾" x 2¼"	¾" x 2¼"	—	—	—	—	—	—	—	—
W10x26	½" x 2"	½" x 2"	½" x 2"	½" x 2"	½" x 2"	⅝" x 2¼"	⅝" x 2¼"	¾" x 2½"	¾" x 2½"	¾" x 2½"	¾" x 2½"	¾" x 2½"	¾" x 2½"	¾" x 2½"	—	—	—	—	—	—	—
W12x26	½" x 2"	½" x 2"	½" x 2"	½" x 2"	½" x 2"	⅝" x 2¼"	⅝" x 2¼"	¾" x 2½"	¾" x 2½"	¾" x 2½"	¾" x 2½"	¾" x 2½"	¾" x 2½"	¾" x 2½"	¾" x 2½"	—	—	—	—	—	—
W14x30	½" x 2"	½" x 2"	½" x 2"	½" x 2"	½" x 2"	⅝" x 2"	⅝" x 2"	¾" x 2¼"	¾" x 2¼"	¾" x 2¼"	¾" x 2¼"	¾" x 2¼"	¾" x 2¼"	¾" x 2¼"	¾" x 2¼"	¾" x 2¼"	¾" x 2¼"	—	—	—	—
W14x38	½" x 2"	½" x 2"	½" x 2"	½" x 2"	½" x 2"	⅝" x 2¼"	⅝" x 2¼"	¾" x 2½"	¾" x 2½"	¾" x 2½"	¾" x 2½"	⅞" x 2½"	⅞" x 2½"	1" x 2¾"	1" x 2¾"	1" x 2¾"	1" x 2¾"	1" x 2¾"	1" x 2¾"	1" x 2¾"	1" x 2¾"
W16x45	—	½" x 2"	½" x 2"	½" x 2"	½" x 2"	½" x 2"	½" x 2"	⅝" x 2¼"	⅝" x 2¼"	⅝" x 2¼"	¾" x 2½"	¾" x 2½"	⅞" x 2½"	⅞" x 2½"	⅞" x 2½"	1" x 2¾"	1" x 2¾"	1" x 2¾"	1" x 2¾"	1" x 2¾"	1" x 2¾"

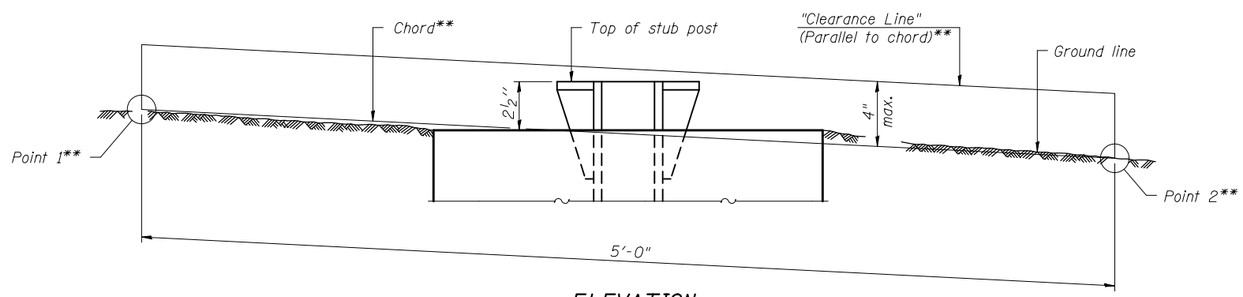

ELEVATION
GROUND LINE & STUB POST

** For all "Point 1" and "Point 2" locations, "Clearance Line" must be at or above top of stub post.

(1) Quantity includes all concrete necessary for one foundation.

(2) Includes reinforcement bars and spiral hooping for one foundation.

BAW-A-2 6-1-12

(Sheet 2 of 2)

FILE NAME =	USER NAME =	DESIGNED -	REVISED
		CHECKED -	REVISED
	PLOT SCALE =	DRAWN -	REVISED
	PLOT DATE =	CHECKED -	REVISED

STATE OF ILLINOIS
DEPARTMENT OF TRANSPORTATION

BREAK-AWAY WIDE FLANGE
STEEL SIGN POST TABLES

SHEET NO. OF SHEETS

F.A. RTE.	SECTION	COUNTY	TOTAL SHEETS	SHEET NO.

CONTRACT NO.

ILLINOIS FED. AID PROJECT