CELL / MODEL NAME	DESCRIPTION	DATE
SA-1-0	Approach span for vaulted abutments with PPC I beams no skew	2/17/2017
SA-1-L	Approach span for vaulted abutments with PPC I beams ahead left	2/17/2017
SA-1-R	Approach span for vaulted abutments with PPC I beams ahead right	2/17/2017
SA-1D-0	Approach span for vaulted abutments with PPC I beams no skew	2/17/2017
SA-1D-L	Approach span for vaulted abutments with PPC I beams ahead left	2/17/2017
SA-1D-R	Approach span for vaulted abutments with PPC I beams ahead right	2/17/2017
SA-2-0	Approach span for vaulted abutments (sand filled) no skew	2/17/2017
SA-2-L	Approach span for vaulted abutments (sand filled) ahead left	2/17/2017
SA-2-R	Approach span for vaulted abutments (sand filled) ahead right	2/17/2017

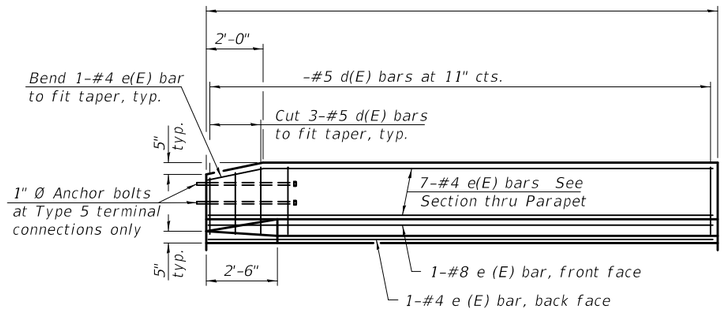

INSIDE ELEVATION OF PARAPET

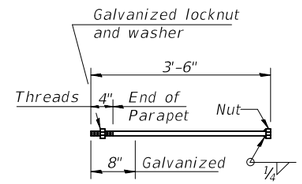

1" Ø ANCHOR BOLT
(Cost included with Concrete Superstructure.)

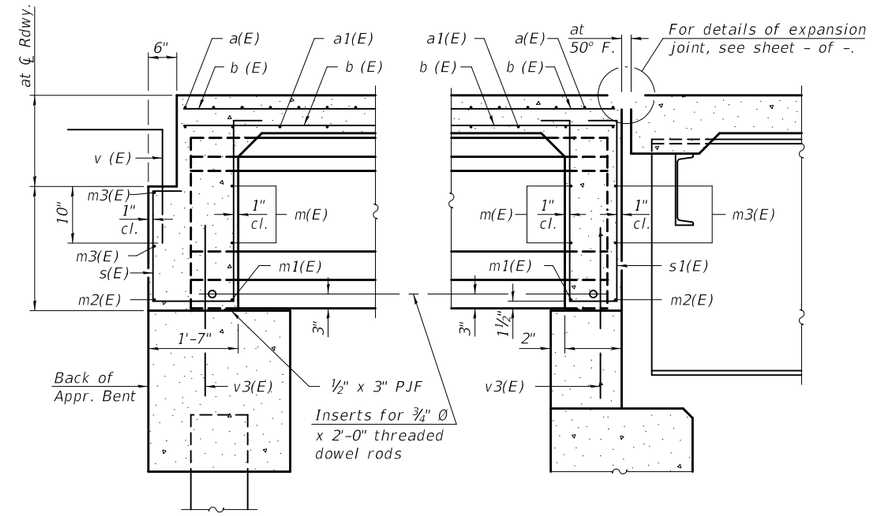

SECTION A-A

SECTION B-B

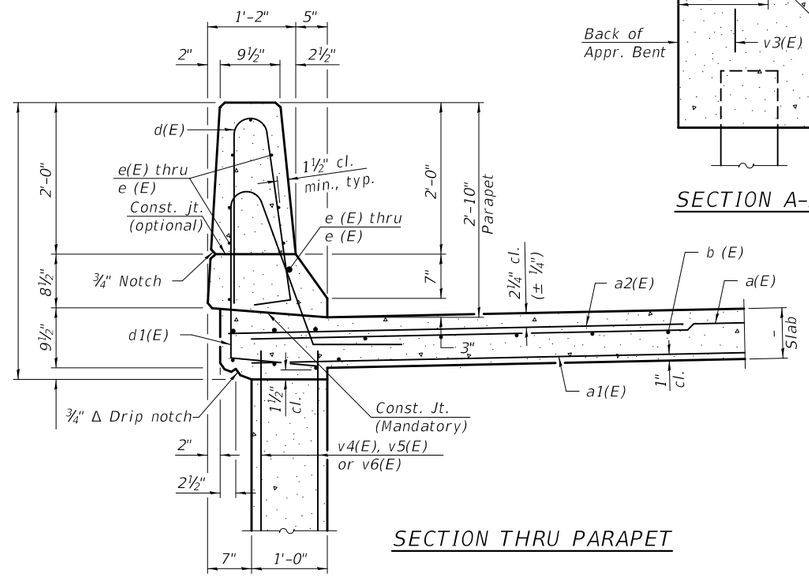

SECTION THRU PARAPET

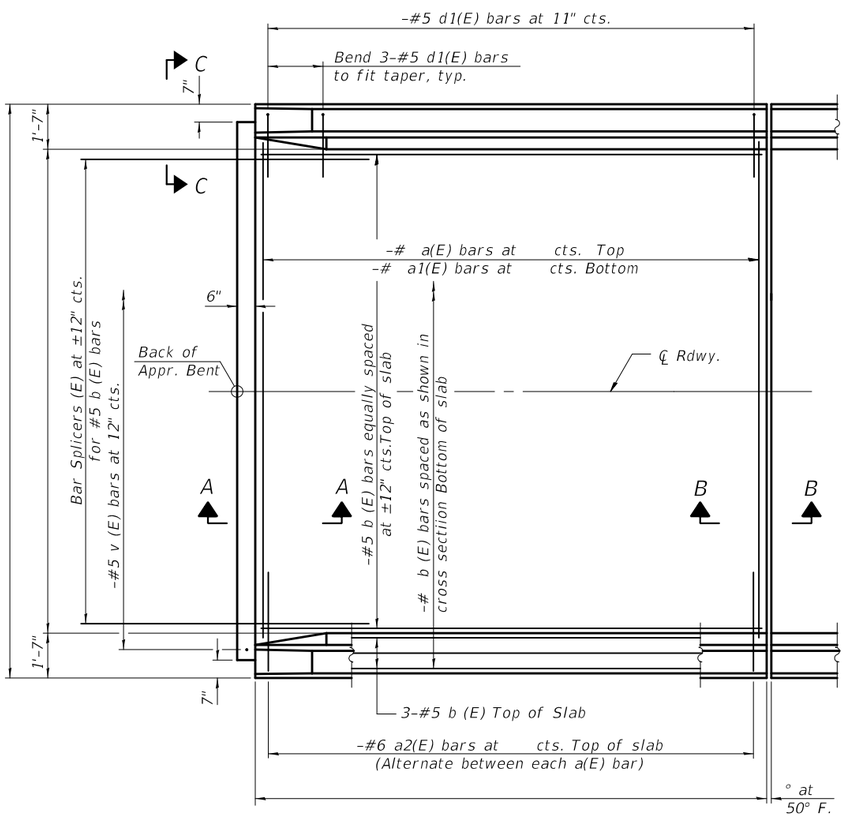

PLAN

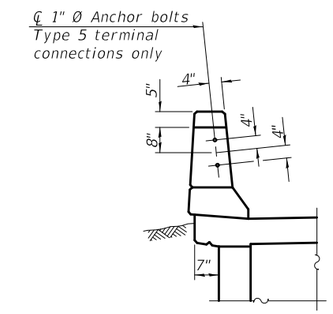

VIEW C-C

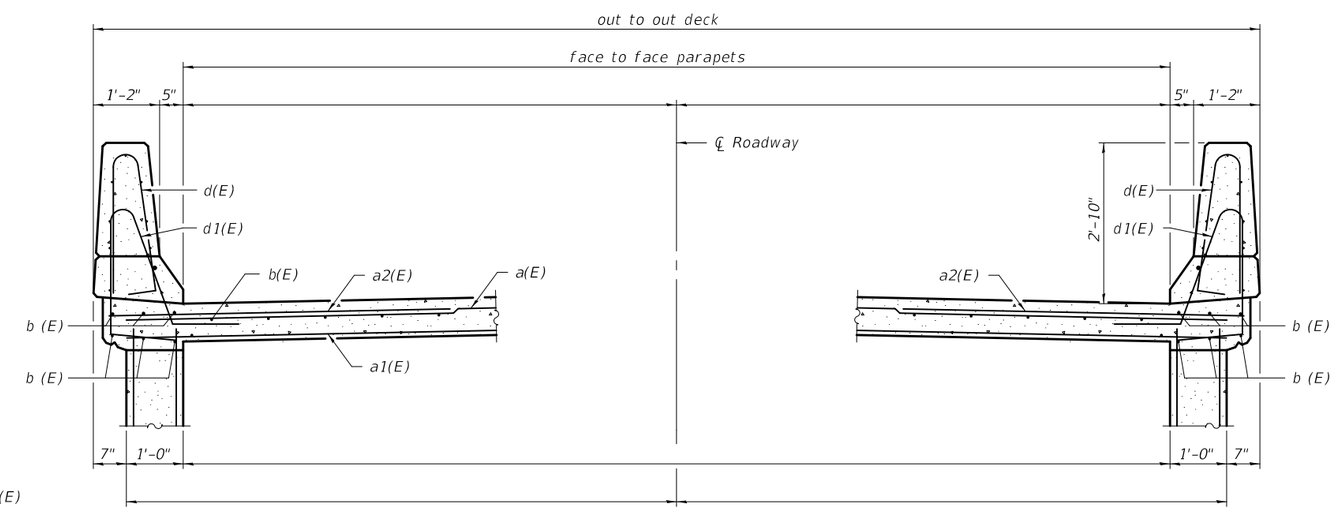

CROSS SECTION

Notes:
See sheets and of for v3(E) thru v6(E) bars.

SA-1-0 2-17-2017

FILE NAME =	USER NAME =	DESIGNED -	REVISED -	STATE OF ILLINOIS DEPARTMENT OF TRANSPORTATION	VAULTED ABUTMENT APPROACH SPAN STRUCTURE NO.	F.A. RTE.	SECTION	COUNTY	TOTAL SHEETS	SHEET NO.
		CHECKED -	REVISED -							
	PLOT SCALE =	DRAWN -	REVISED -			CONTRACT NO.				
	PLOT DATE =	CHECKED -	REVISED -			ILLINOIS	FED. AID PROJECT			

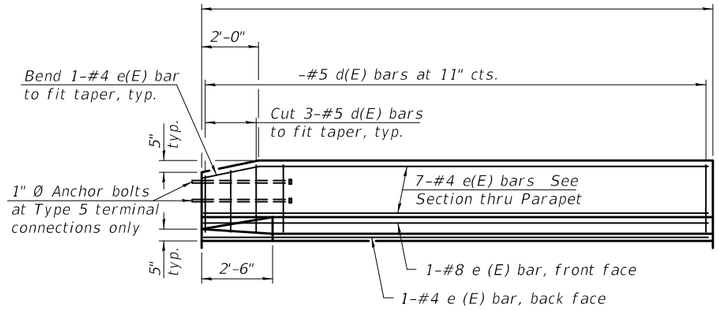

* Order a(E) and a1(E) bars full length. Cut to fit skew and use remainder of bars in opposite end.

INSIDE ELEVATION OF PARAPET

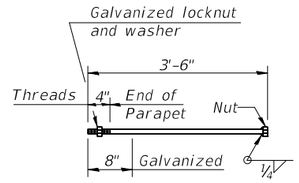

1" Ø ANCHOR BOLT

(Cost included with Concrete Superstructure.)

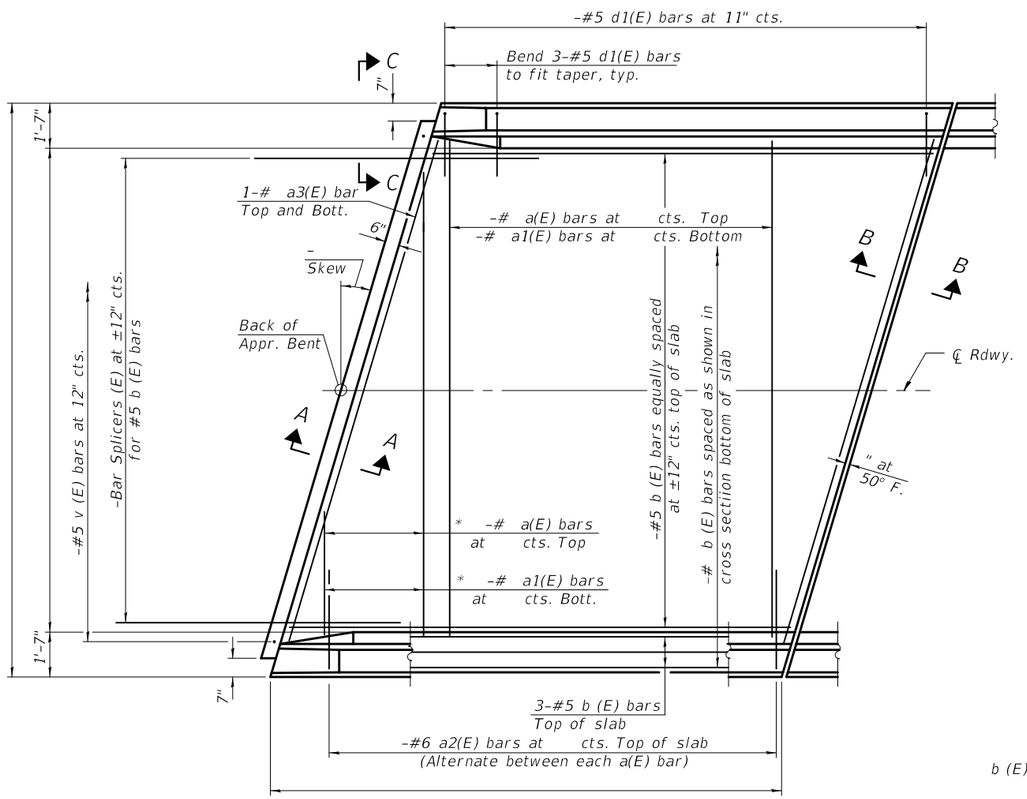

PLAN

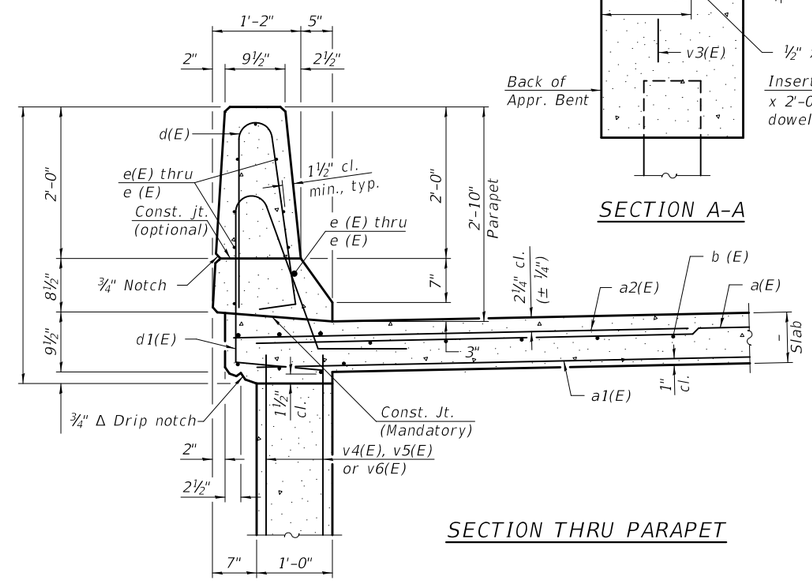

SECTION THRU PARAPET

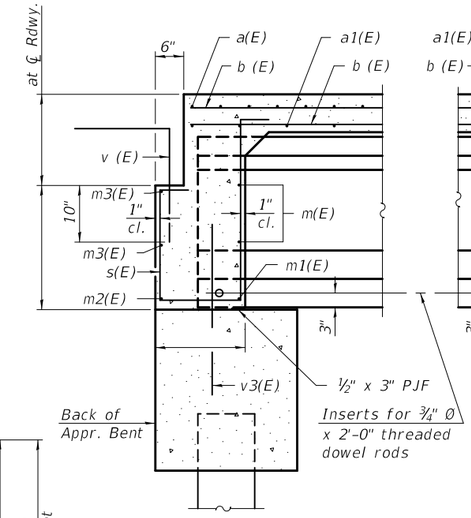

SECTION A-A

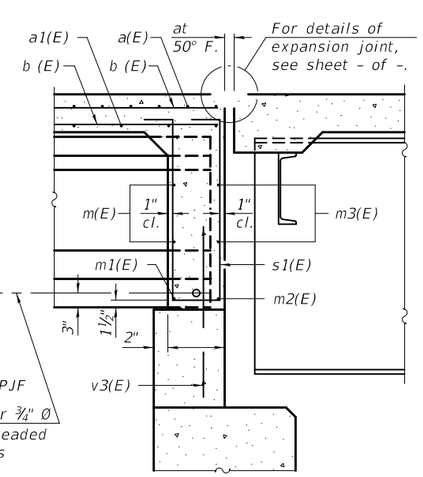

SECTION B-B

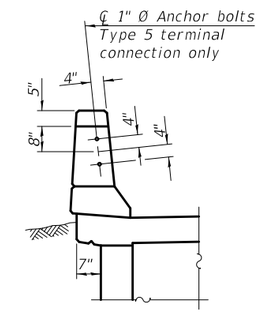

VIEW C-C

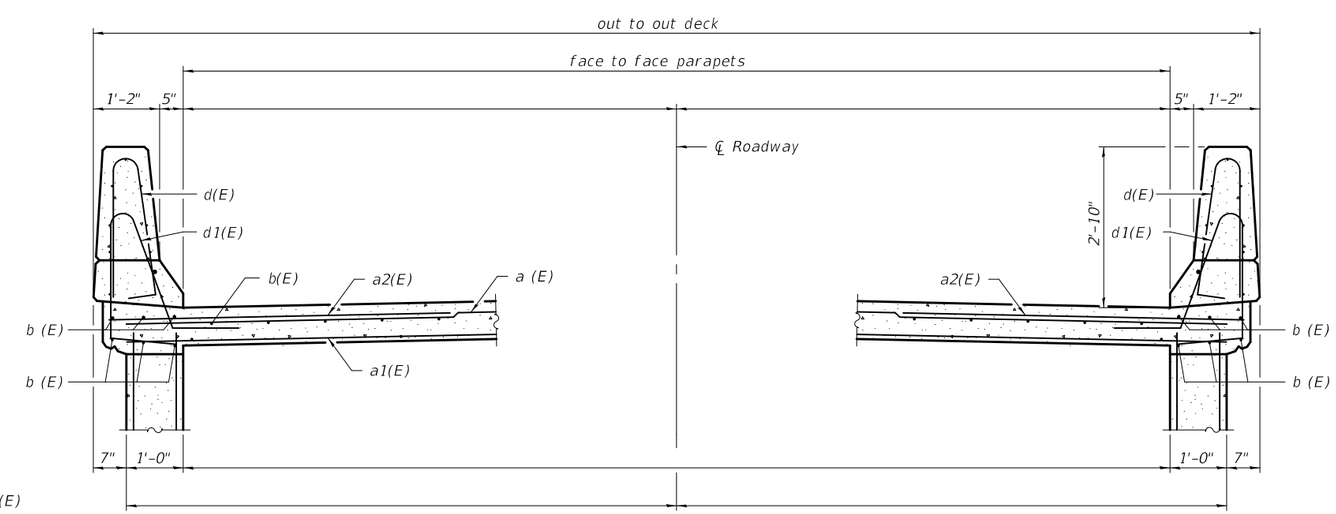

CROSS SECTION

Notes:
See sheets and of for v3(E) thru v6(E) bars.

SA-1-L 2-17-2017

FILE NAME =	USER NAME =	DESIGNED -	REVISED -	STATE OF ILLINOIS DEPARTMENT OF TRANSPORTATION	VAULTED ABUTMENT APPROACH SPAN STRUCTURE NO.	F.A. RTE.	SECTION	COUNTY	TOTAL SHEETS	SHEET NO.
		CHECKED -	REVISED -							
	PLOT SCALE =	DRAWN -	REVISED -			CONTRACT NO.				
	PLOT DATE =	CHECKED -	REVISED -			ILLINOIS	FED. AID PROJECT			

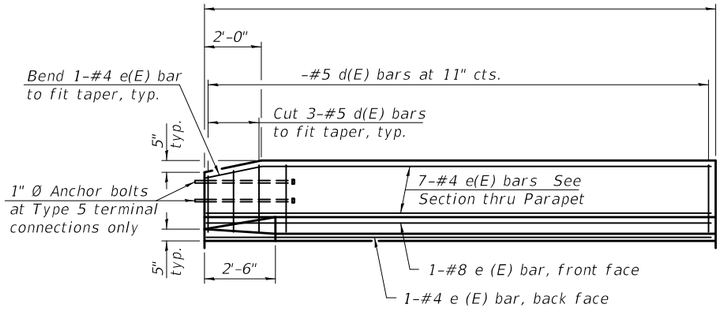

* Order a(E) and a1(E) bars full length. Cut to fit skew and use remainder of bars in opposite end.

INSIDE ELEVATION OF PARAPET

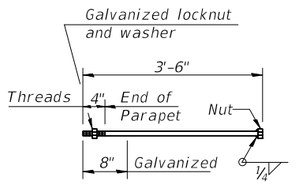

1" Ø ANCHOR BOLT

(Cost included with Concrete Superstructure.)

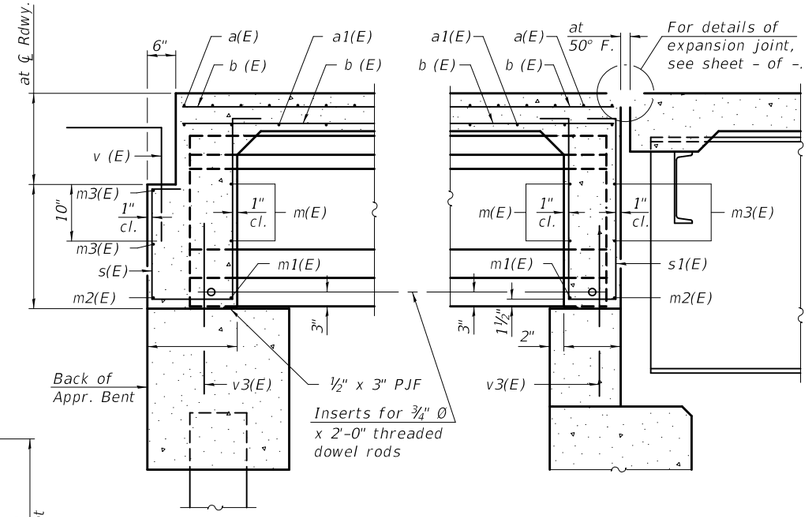

SECTION A-A

SECTION B-B

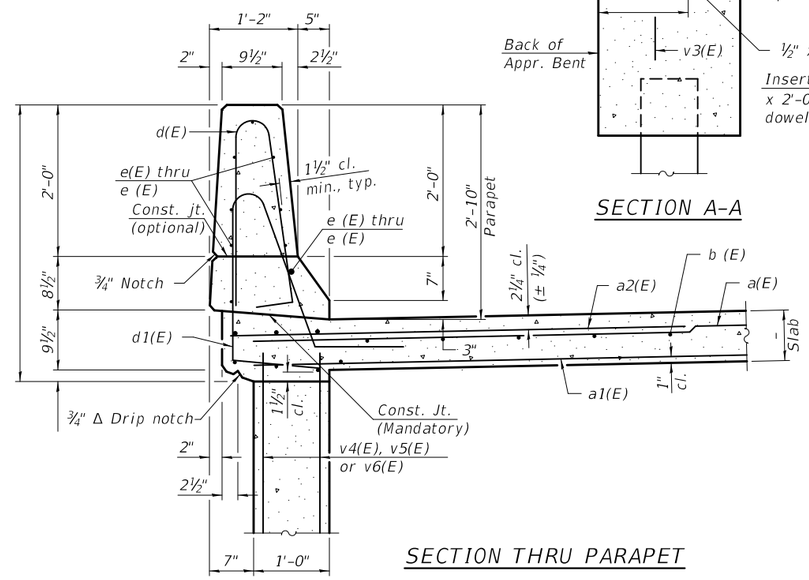

SECTION THRU PARAPET

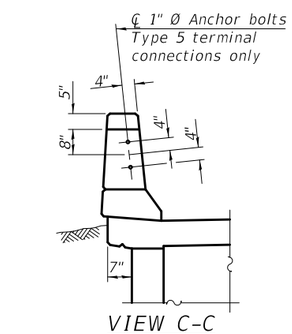

VIEW C-C

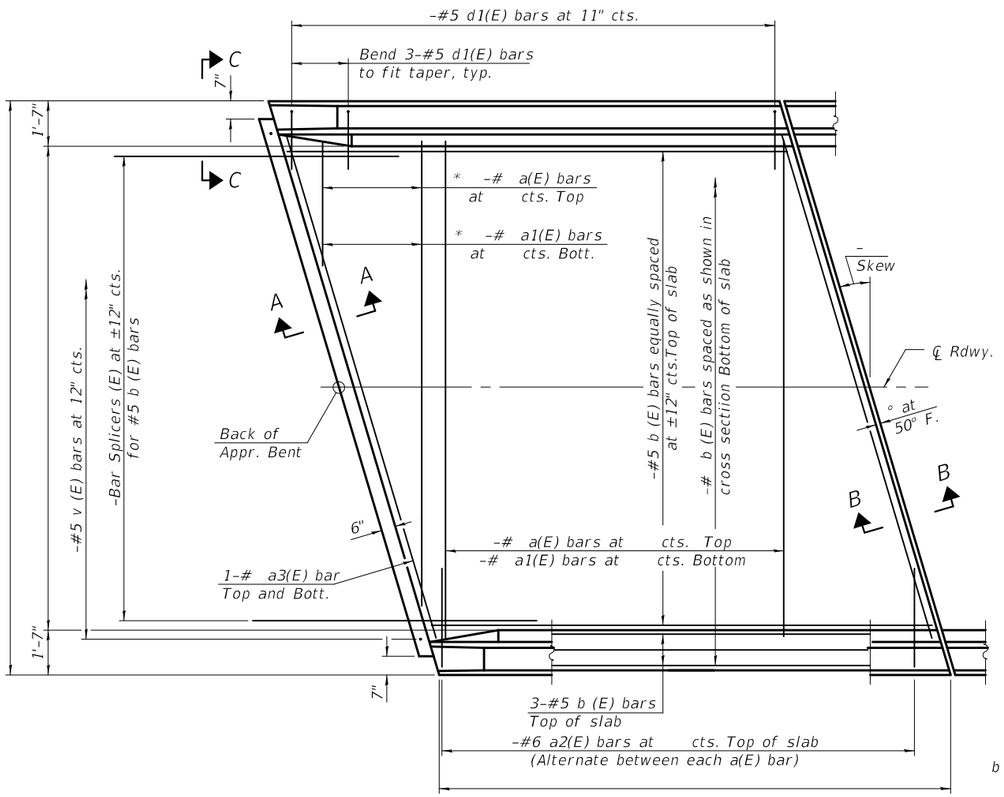

PLAN

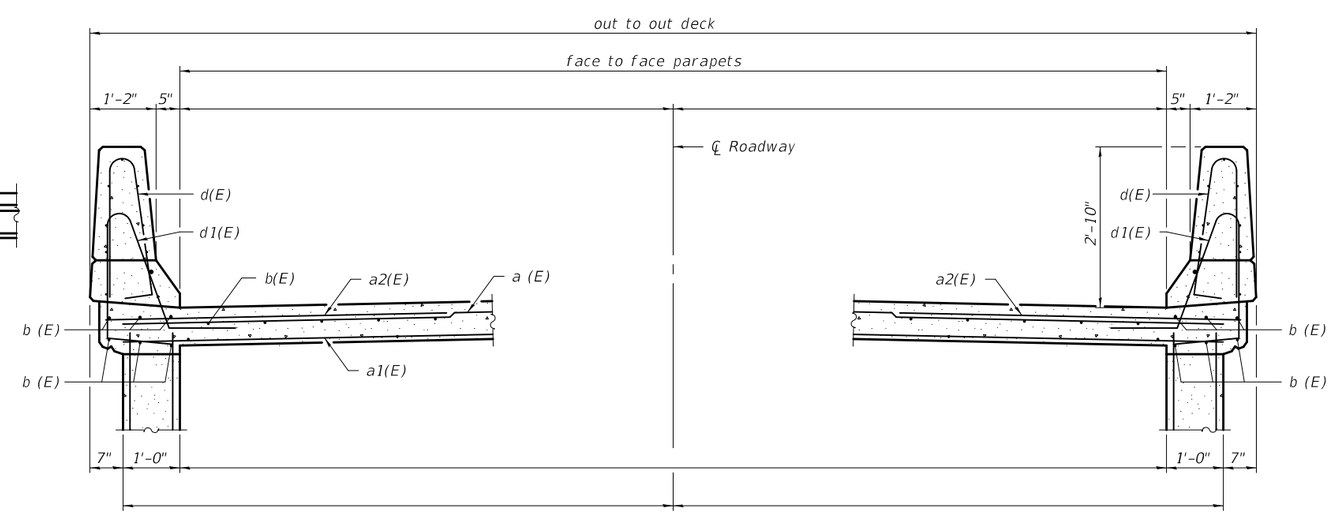

CROSS SECTION

Notes:
See sheets and of for v3(E) thru v6(E) bars.

SA-1-R 2-17-2017

FILE NAME =	USER NAME =	DESIGNED -	REVISED -	STATE OF ILLINOIS DEPARTMENT OF TRANSPORTATION	VAULTED ABUTMENT APPROACH SPAN STRUCTURE NO.	F.A. RTE.	SECTION	COUNTY	TOTAL SHEETS	SHEET NO.
		CHECKED -	REVISED -							
	PLOT SCALE =	DRAWN -	REVISED -			CONTRACT NO.				
	PLOT DATE =	CHECKED -	REVISED -			ILLINOIS	FED. AID PROJECT			

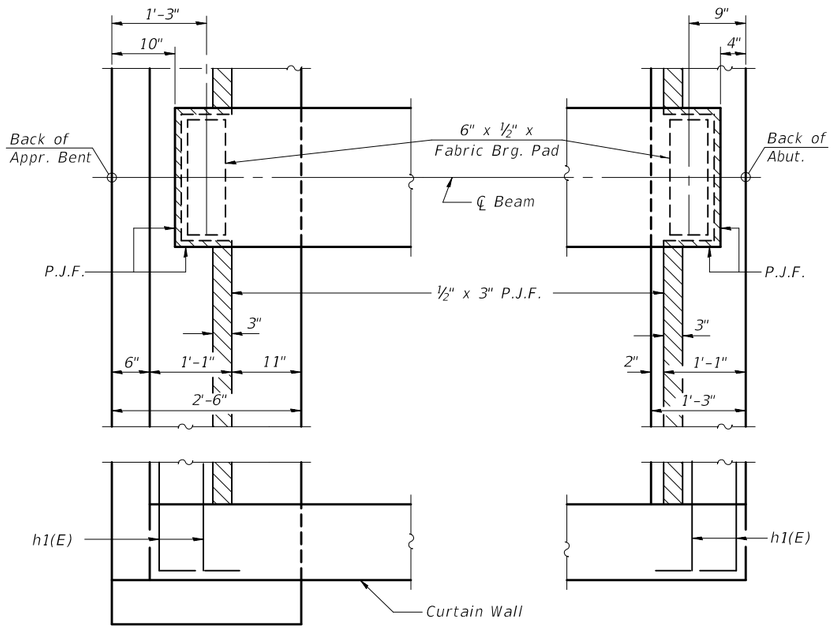

PARTIAL PLAN

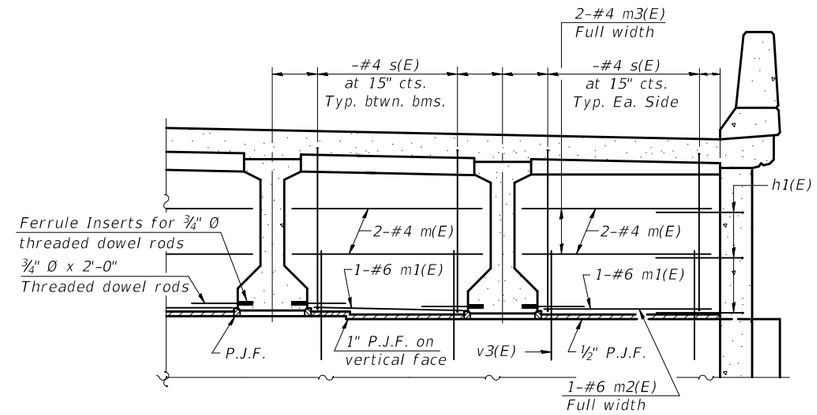

DIAPHRAGM AT APPROACH BENT

For location of m(E), m1(E), m2(E), and m3(E) bars see Section B-B on sheet of .

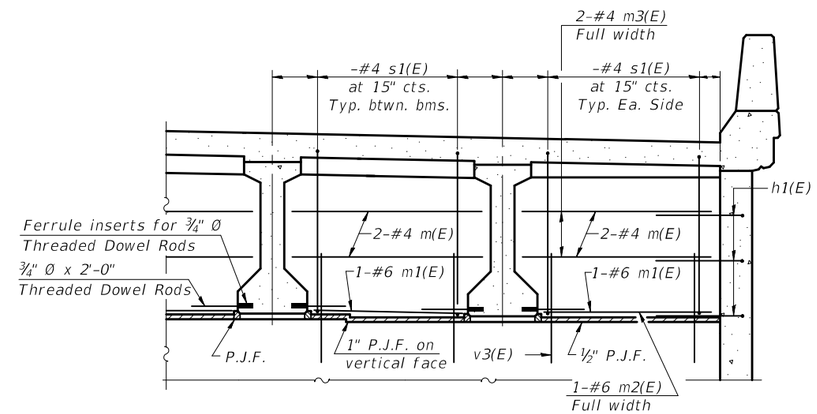

DIAPHRAGM AT ABUTMENT

For location of m(E), m1(E), m2(E), and m3(E) bars see Section A-A on sheet of .

Notes:
See sheet and of for h1(E) and v3(E) bars.

TWO APPROACH SLABS BILL OF MATERIAL

Bar	No.	Size	Length	Shape
a(E)				
a1(E)				
a2(E)		#6	6'-0"	
b (E)		#5		
b (E)				
d(E)		#5	5'-7"	
d1(E)		#5		
e (E)		#4		
e (E)				
e (E)				
m(E)		#4		
m1(E)		#6		
m2(E)		#6		
m3(E)		#4		
s(E)		#4		
s1(E)		#4		
v (E)		#5		
Reinforcement Bars, Epoxy Coated			Pound	
Concrete Superstructure			Cu. Yd.	

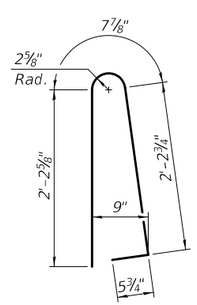

BAR d(E)

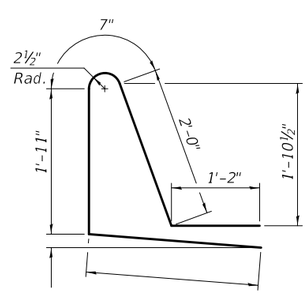

BAR d1(E)

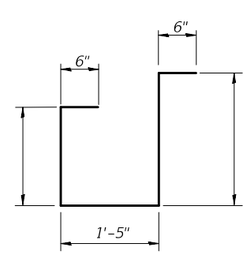

BAR s(E)

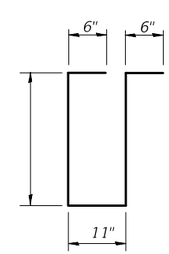

BAR s1(E)

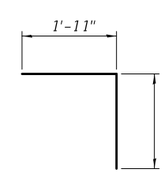

BAR v (E)

SA-1D-0 2-17-2017

FILE NAME =	USER NAME =	DESIGNED -	REVISED -
		CHECKED -	REVISED -
	PLOT SCALE =	DRAWN -	REVISED -
	PLOT DATE =	CHECKED -	REVISED -

STATE OF ILLINOIS
DEPARTMENT OF TRANSPORTATION

VAULTED ABUTMENT APPROACH SPAN DETAILS
STRUCTURE NO.

F.A. RTE.	SECTION	COUNTY	TOTAL SHEETS	SHEET NO.
		CONTRACT NO.		
	ILLINOIS	FED. AID PROJECT		

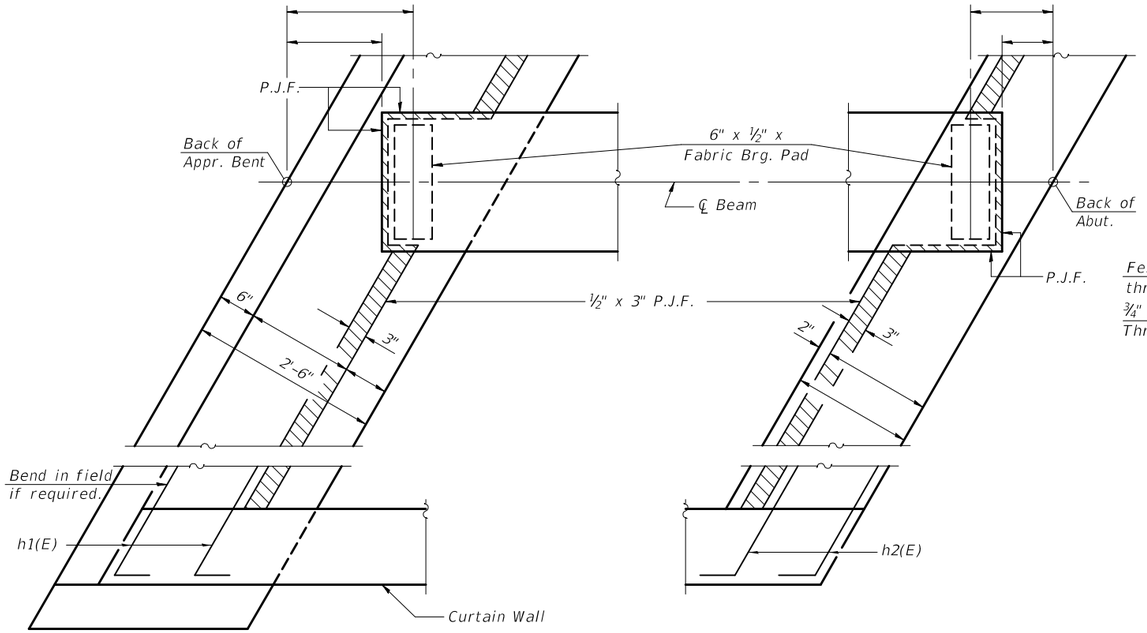

PARTIAL PLAN

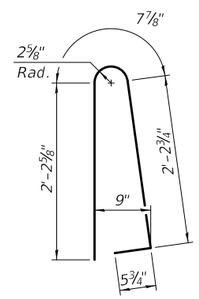

BAR d(E)

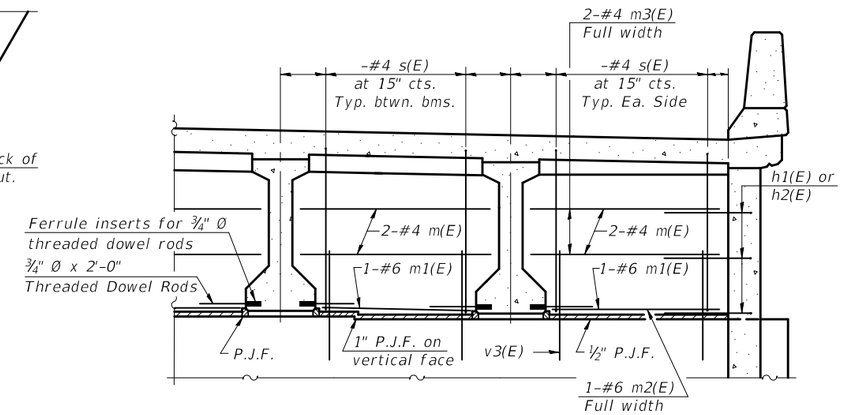

DIAPHRAGM AT APPROACH BENT

For location of m(E), m1(E), m2(E), and m3(E) bars
see Section B-B on sheet of .

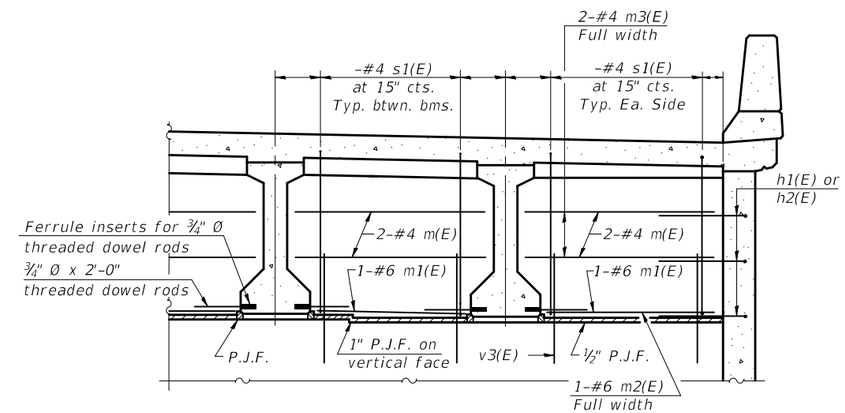

DIAPHRAGM AT ABUTMENT

For location of m(E), m1(E), m2(E), and m3(E) bars
see Section A-A on sheet of .

Notes:
See sheet and of for h1(E), h2(E) and v3(E) bars.

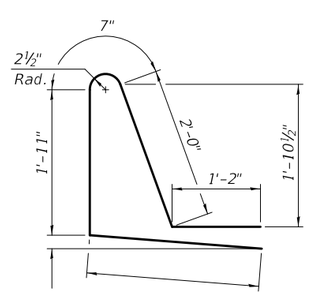

BAR d1(E)

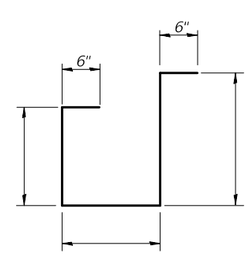

BAR s(E)

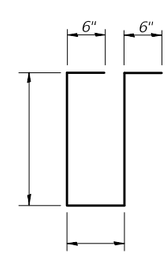

BAR s1(E)

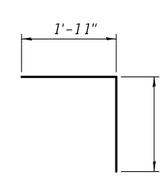

BAR v (E)

TWO APPROACH SLABS BILL OF MATERIAL

Bar	No.	Size	Length	Shape
a(E)				
a1(E)				
a2(E)		#6	6'-0"	
a3(E)				
b (E)		#5		
b (E)				
d(E)		#5	5'-7"	
d1(E)		#5		
e (E)		#4		
e (E)				
e (E)				
m(E)		#4		
m1(E)		#6		
m2(E)		#6		
m3(E)		#4		
s(E)		#4		
s1(E)		#4		
v (E)		#5		
Reinforcement Bars, Epoxy Coated			Pound	
Concrete Superstructure			Cu. Yd.	

SA-1D-L 2-17-2017

FILE NAME =	USER NAME =	DESIGNED -	REVISED -
		CHECKED -	REVISED -
	PLOT SCALE =	DRAWN -	REVISED -
	PLOT DATE =	CHECKED -	REVISED -

STATE OF ILLINOIS
DEPARTMENT OF TRANSPORTATION

VAULTED ABUTMENT APPROACH SPAN DETAILS
STRUCTURE NO.

F.A. RTE.	SECTION	COUNTY	TOTAL SHEETS	SHEET NO.
		CONTRACT NO.		
	ILLINOIS	FED. AID PROJECT		

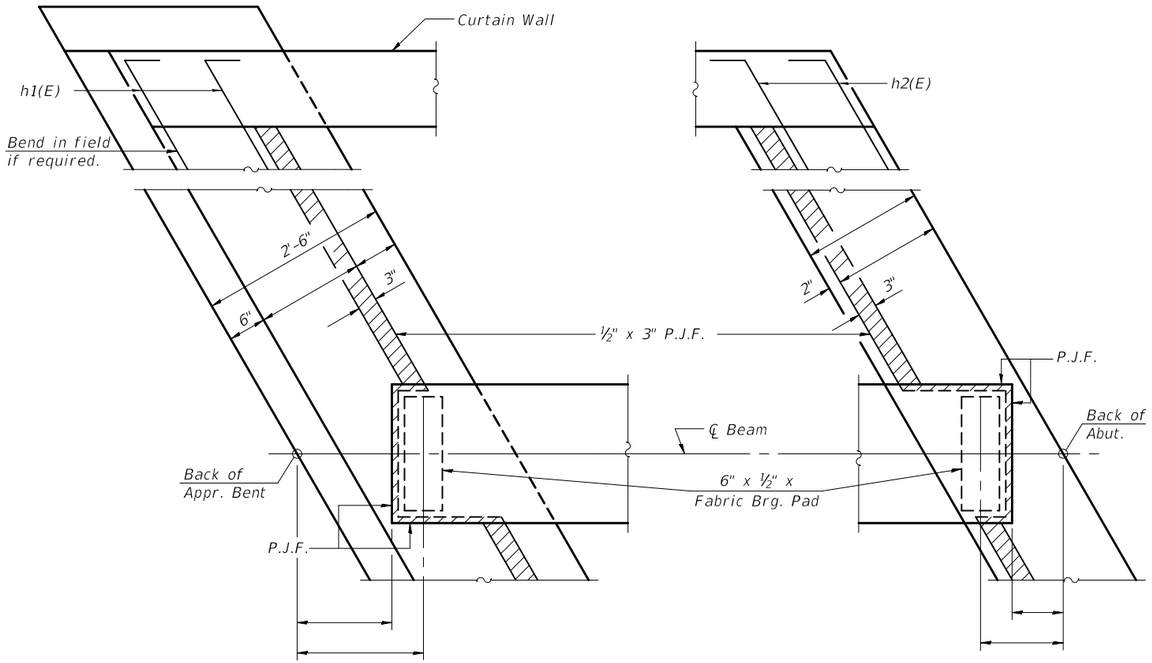

PARTIAL PLAN

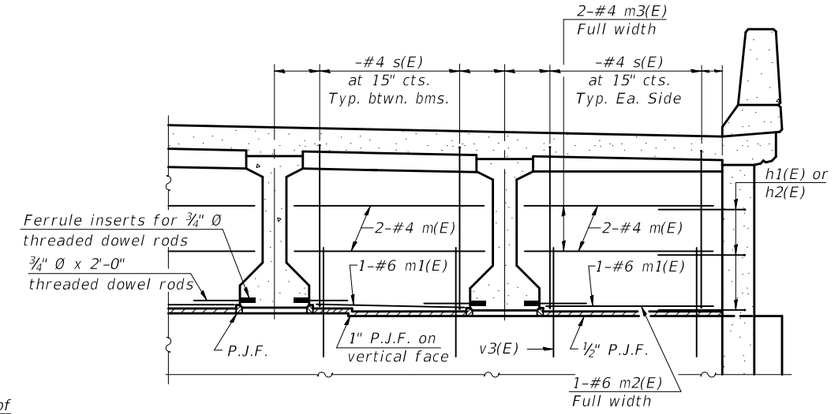

DIAPHRAGM AT APPROACH BENT

For location of m(E), m1(E), m2(E), and m3(E) bars
see Section B-B on sheet of .

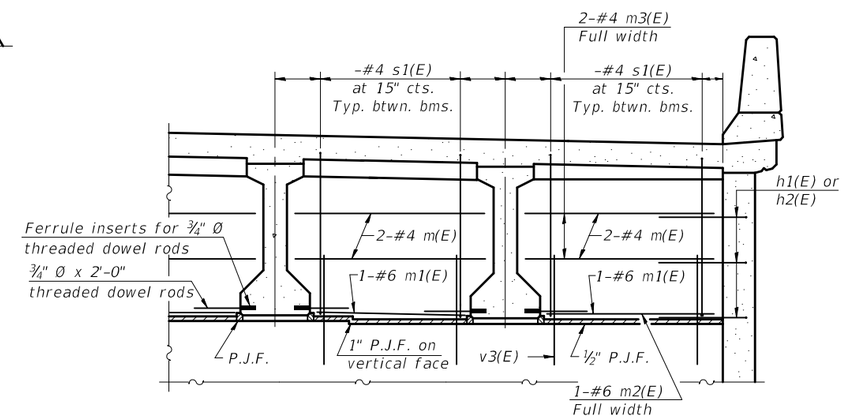

DIAPHRAGM AT ABUTMENT

For location of m(E), m1(E), m2(E), and m3(E) bars
see Section A-A on sheet of .

TWO APPROACH SLABS
BILL OF MATERIAL

Bar	No.	Size	Length	Shape
a(E)				
a1(E)				
a2(E)		#6	6'-0"	
a3(E)				
b (E)		#5		
b (E)				
d(E)		#5	5'-7"	
d1(E)		#5		
e (E)		#4		
e (E)				
e (E)				
m(E)		#4		
m1(E)		#6		
m2(E)		#6		
m3(E)		#4		
s(E)		#4		
s1(E)		#4		
v (E)		#5		
Reinforcement Bars, Epoxy Coated			Pound	
Concrete Superstructure			Cu. Yd.	

Notes:
See sheet and of for h1(E), h2(E) and v3(E) bars.

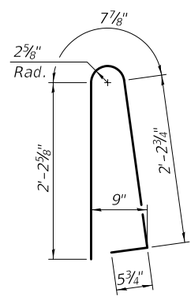

BAR d(E)

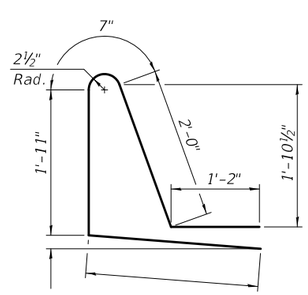

BAR d1(E)

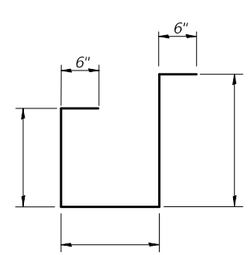

BAR s(E)

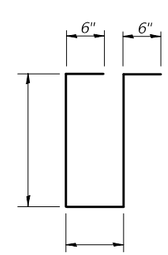

BAR s1(E)

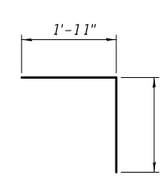

BAR v (E)

SA-1D-R 2-17-2017

FILE NAME =	USER NAME =	DESIGNED -	REVISED -
		CHECKED -	REVISED -
	PLOT SCALE =	DRAWN -	REVISED -
	PLOT DATE =	CHECKED -	REVISED -

STATE OF ILLINOIS
DEPARTMENT OF TRANSPORTATION

VAULTED ABUTMENT APPROACH SPAN DETAILS
STRUCTURE NO.

F.A. RTE.	SECTION	COUNTY	TOTAL SHEETS	SHEET NO.

CONTRACT NO.

ILLINOIS FED. AID PROJECT

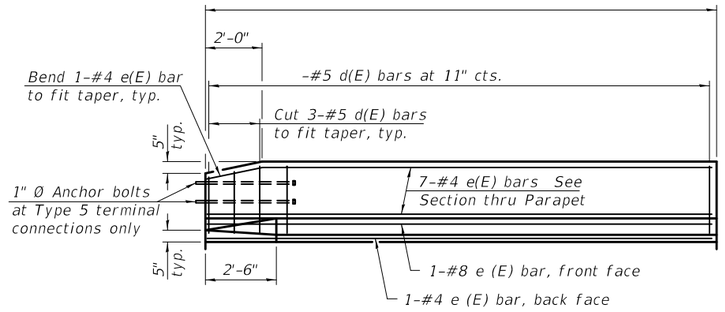

INSIDE ELEVATION OF PARAPET

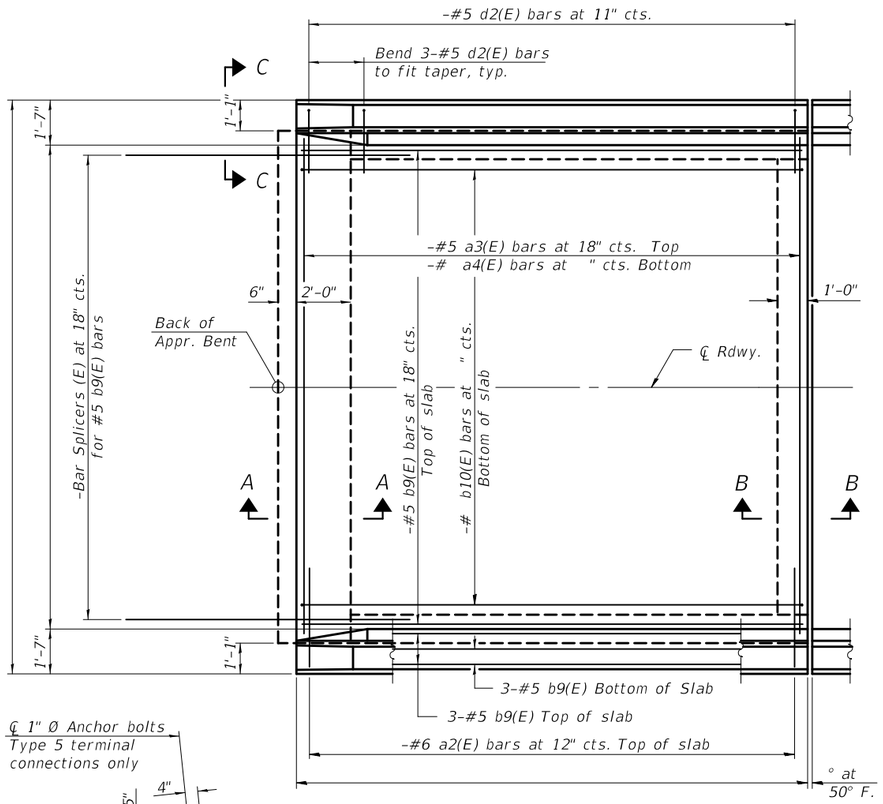

PLAN

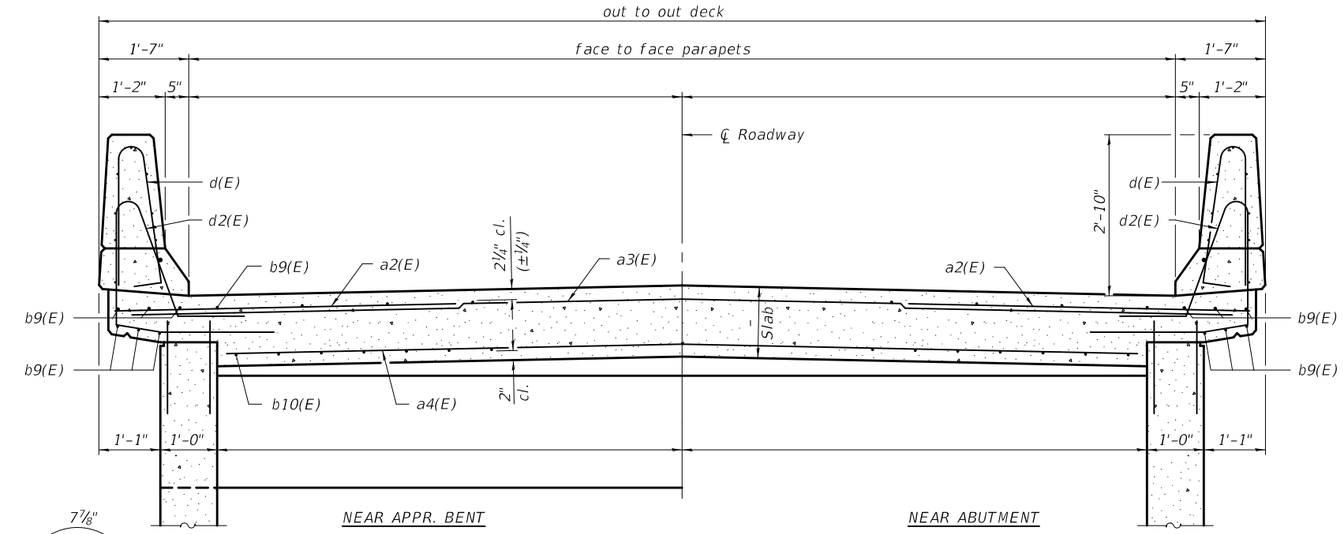

CROSS SECTION

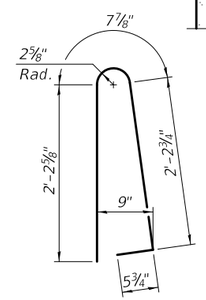

BAR d(E)

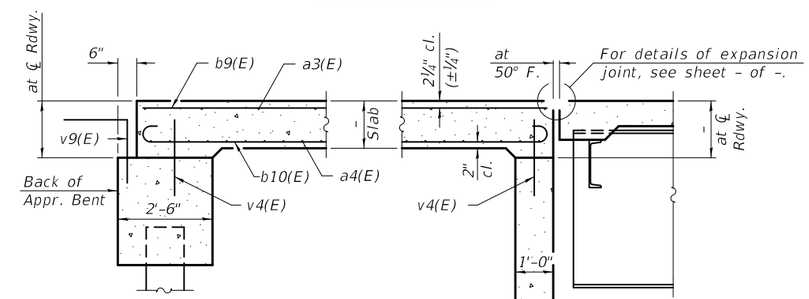

SECTION A-A

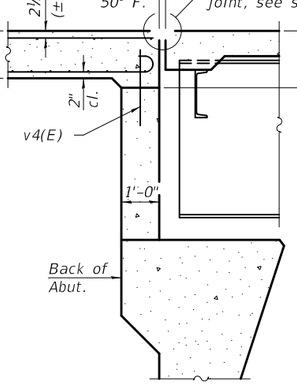

SECTION B-B

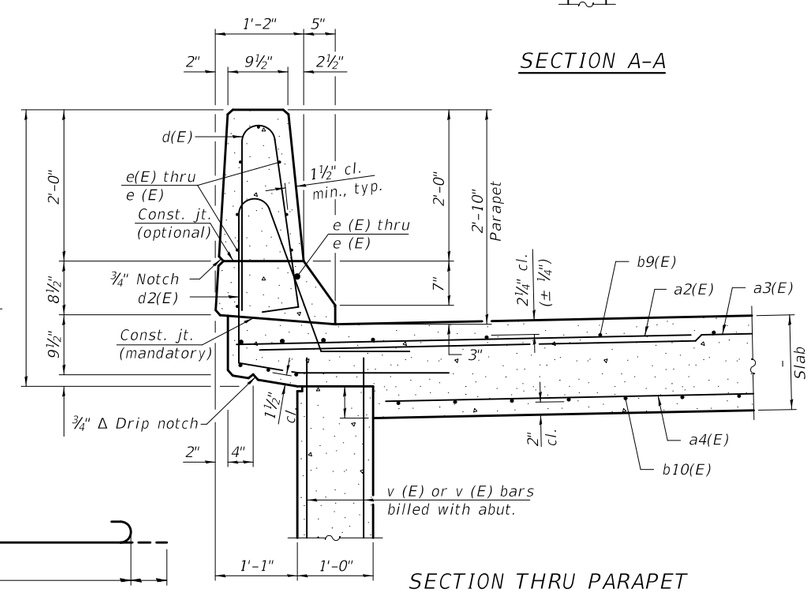

SECTION THRU PARAPET

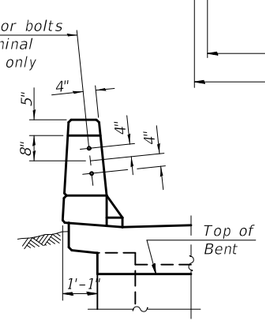

VIEW C-C

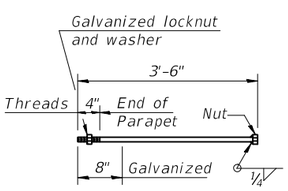

1" Ø ANCHOR BOLT

(Cost included with Concrete Superstructure)

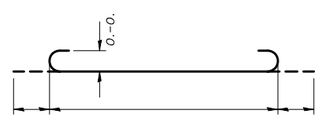

BAR b10(E)

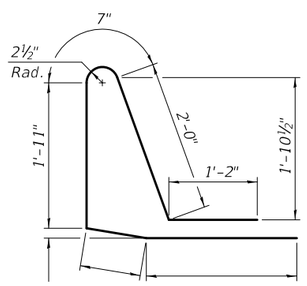

BAR d2(E)

TWO APPROACH SLABS BILL OF MATERIAL

Bar	No.	Size	Length	Shape
a2(E)		#6	6'-6"	
a3(E)		#5		
a4(E)				
b9(E)		#5		
b10(E)				
d(E)		#5	5'-7"	
d2(E)		#5		
e (E)		#4		
e (E)				
e (E)				
Reinforcement Bars, Epoxy Coated			Pound	
Concrete Superstructure			Cu. Yd.	

SA-2-0 2-17-2017

FILE NAME =	USER NAME =	DESIGNED -	REVISED -
		CHECKED -	REVISED -
	PLOT SCALE =	DRAWN -	REVISED -
	PLOT DATE =	CHECKED -	REVISED -

STATE OF ILLINOIS
DEPARTMENT OF TRANSPORTATION

VAULTED ABUTMENT APPROACH SPAN
STRUCTURE NO.

F.A. RTE.	SECTION	COUNTY	TOTAL SHEETS	SHEET NO.

CONTRACT NO.

ILLINOIS FED. AID PROJECT

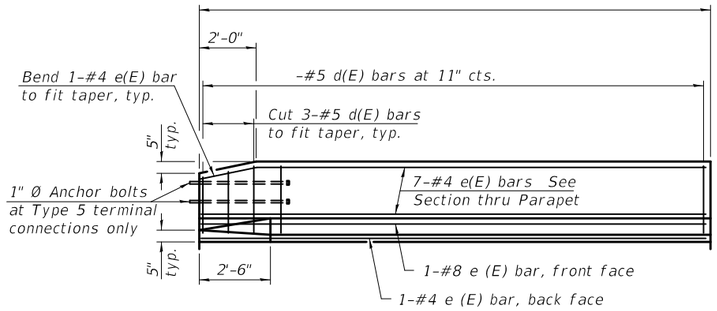

INSIDE ELEVATION OF PARAPET

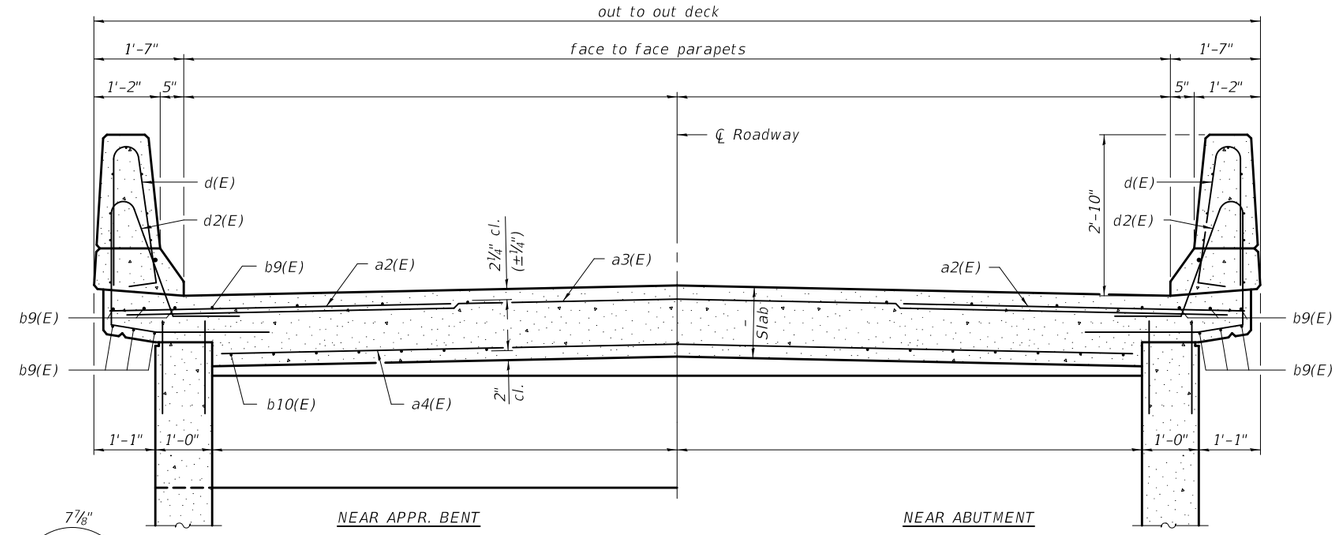

NEAR APPR. BENT

NEAR ABUTMENT

CROSS SECTION

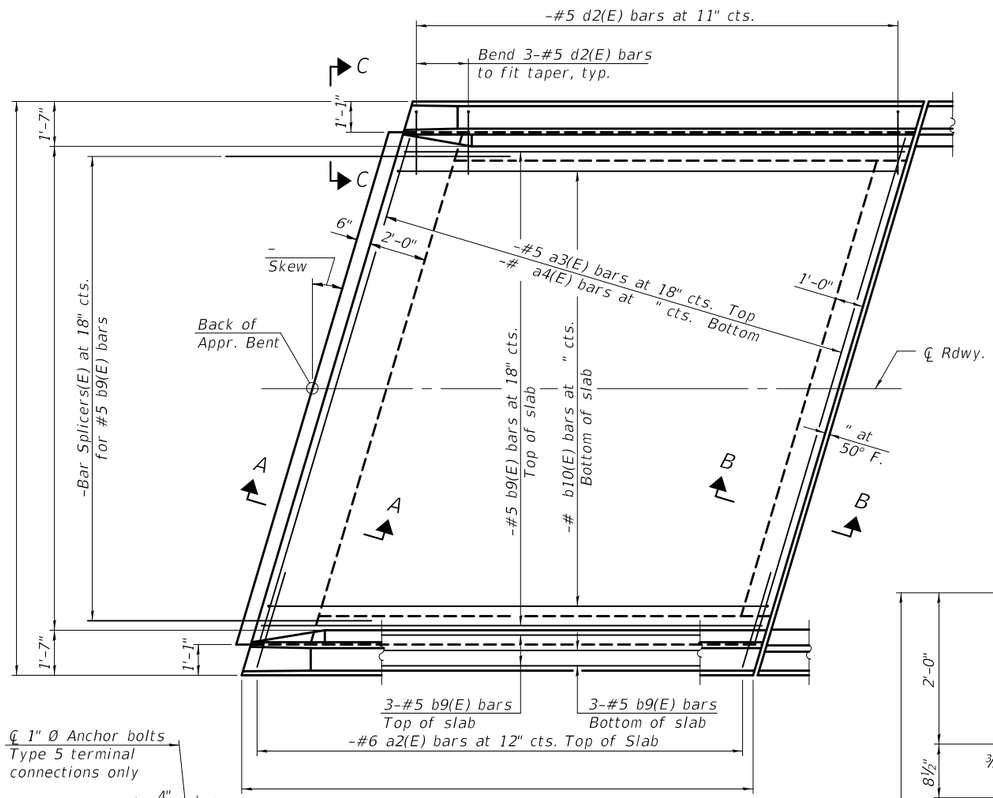

PLAN

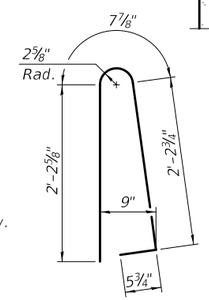

BAR d(E)

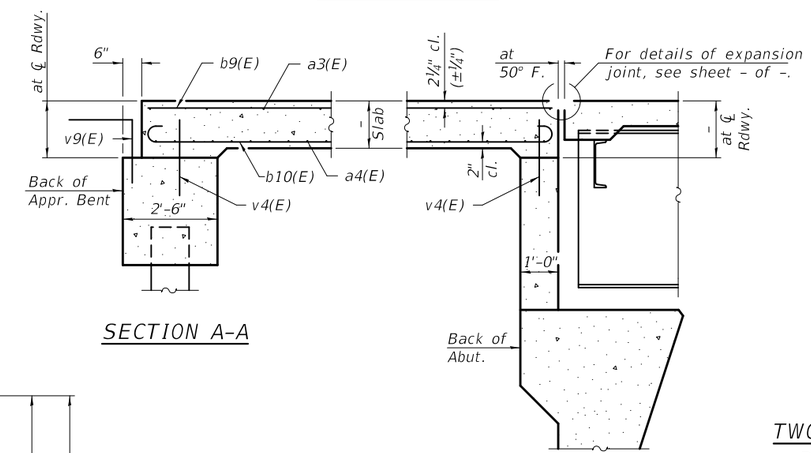

SECTION A-A

SECTION B-B

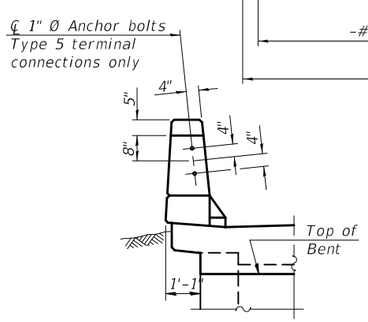

VIEW C-C

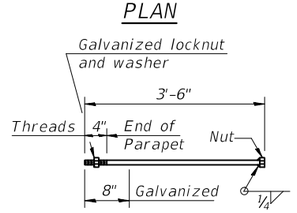

1" Ø ANCHOR BOLT

(Cost included with Concrete Superstructure)

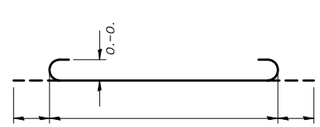

BAR b10(E)

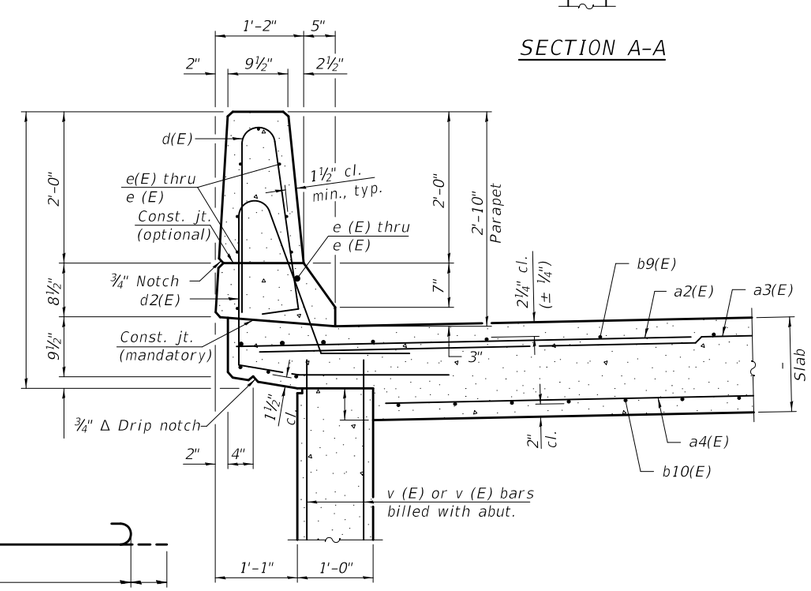

SECTION THRU PARAPET

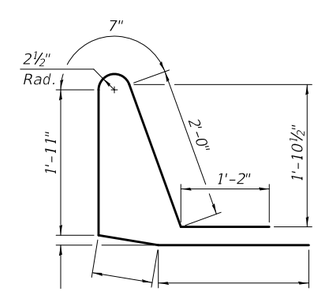

BAR d2(E)

TWO APPROACH SLABS

BILL OF MATERIAL

Bar	No.	Size	Length	Shape
a2(E)		#6	6'-6"	
a3(E)		#5		
a4(E)				
b9(E)		#5		
b10(E)				
d(E)		#5	5'-7"	
d2(E)		#5		
e(E)		#4		
e (E)				
e (E)				
Reinforcement Bars, Epoxy Coated			Pound	
Concrete Superstructure			Cu. Yd.	

SA-2-L 2-17-2017

FILE NAME =	USER NAME =	DESIGNED -	REVISED -
		CHECKED -	REVISED -
	PLOT SCALE =	DRAWN -	REVISED -
	PLOT DATE =	CHECKED -	REVISED -

STATE OF ILLINOIS
DEPARTMENT OF TRANSPORTATION

VAULTED ABUTMENT APPROACH SPAN
STRUCTURE NO.

F.A. RTE.	SECTION	COUNTY	TOTAL SHEETS	SHEET NO.

CONTRACT NO.

ILLINOIS FED. AID PROJECT

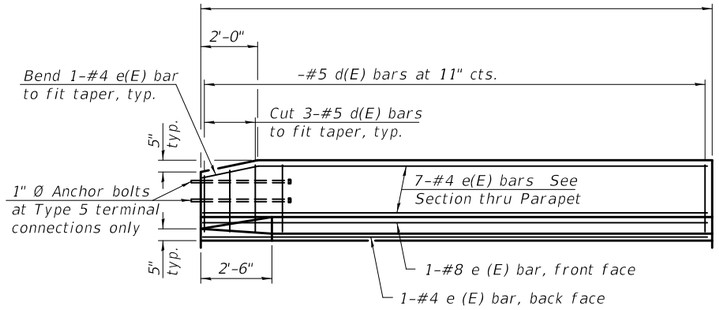

INSIDE ELEVATION OF PARAPET

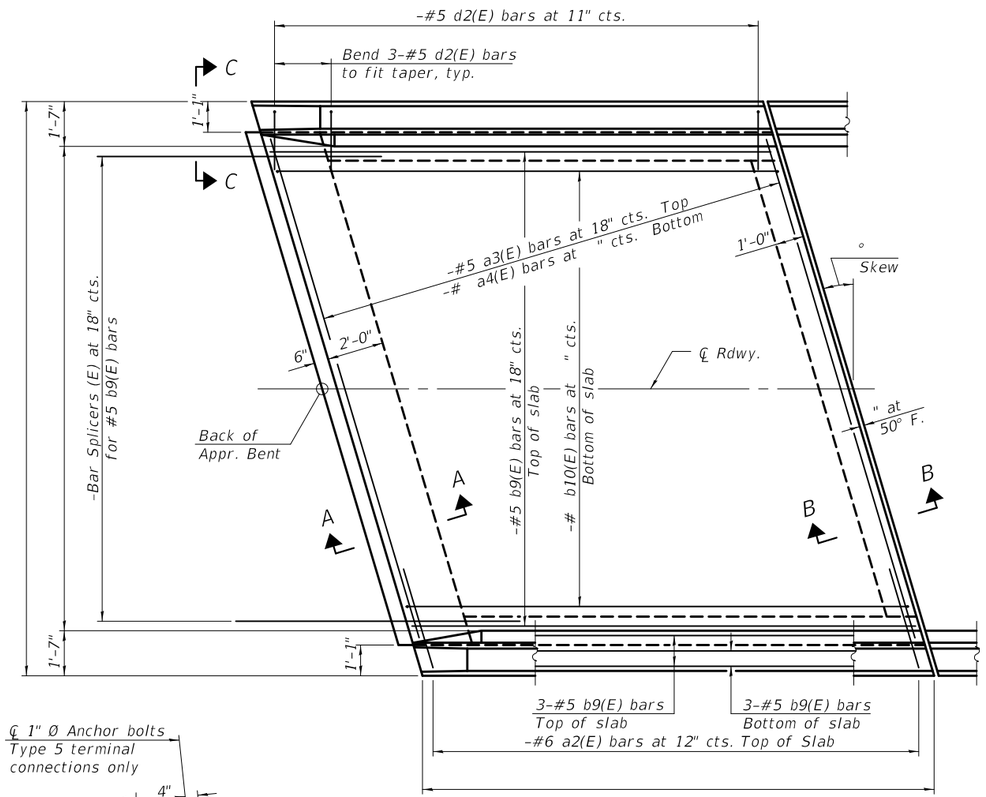

PLAN

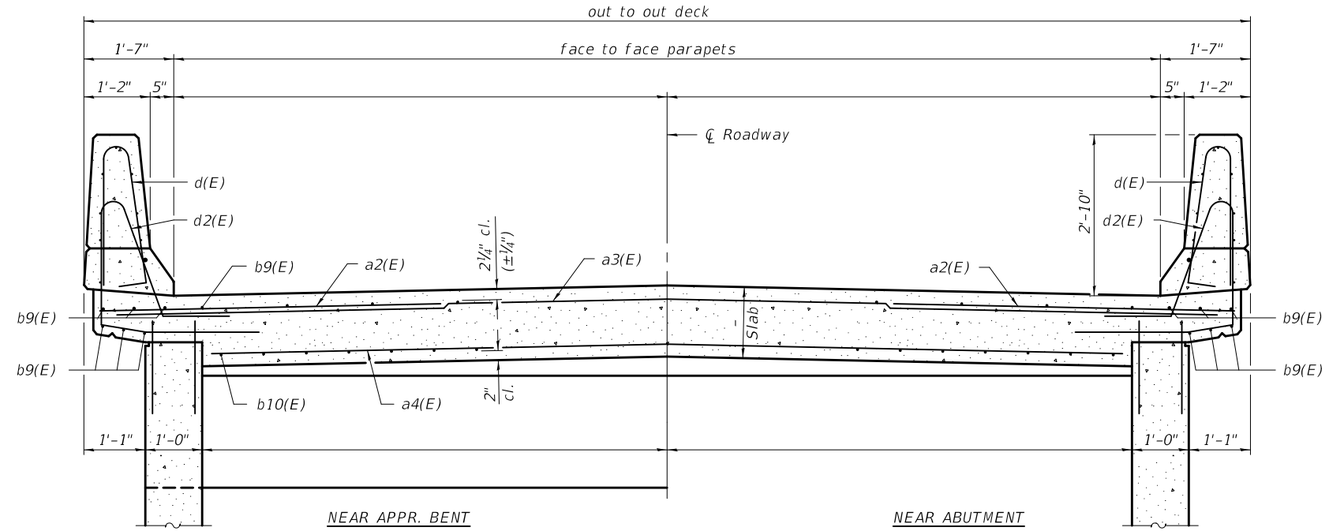

CROSS SECTION

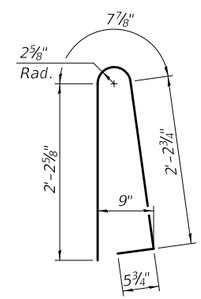

BAR d(E)

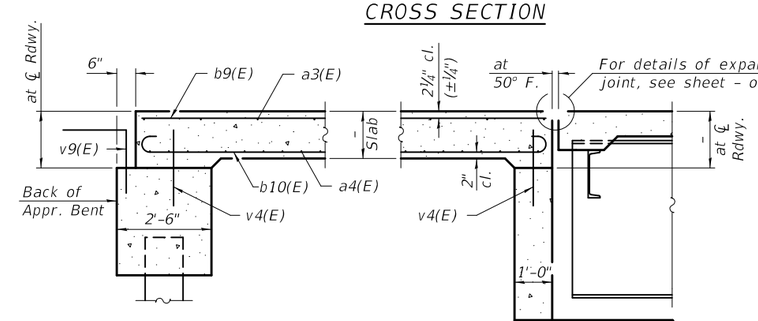

SECTION A-A

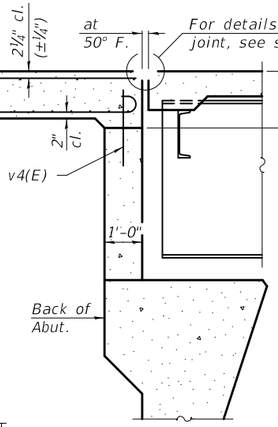

SECTION B-B

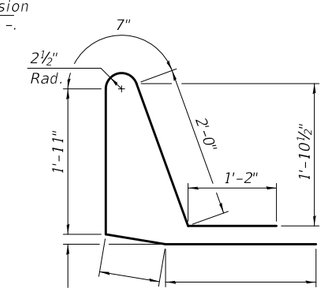

BAR d2(E)

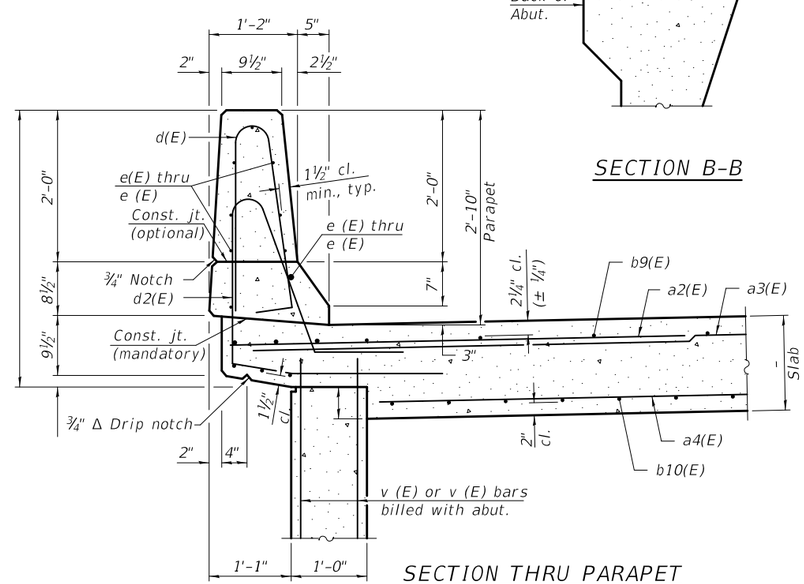

SECTION THRU PARAPET

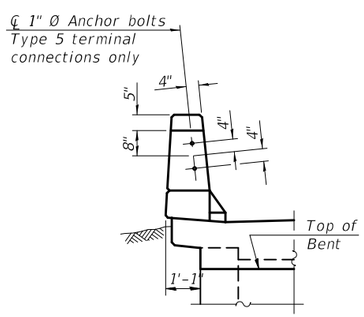

VIEW C-C

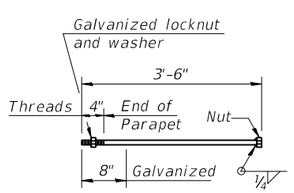

1" Ø ANCHOR BOLT
(Cost included with Concrete Superstructure)

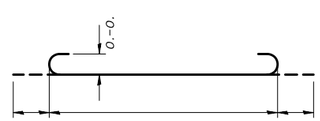

BAR b10(E)

TWO APPROACH SLABS
BILL OF MATERIAL

Bar	No.	Size	Length	Shape
a2(E)		#6	6'-6"	
a3(E)		#5		
a4(E)				
b9(E)		#5		
b10(E)				
d(E)		#5	5'-7"	
d2(E)		#5		
e (E)		#4		
e (E)				
e (E)				
Reinforcement Bars, Epoxy Coated			Pound	
Concrete Superstructure			Cu. Yd.	

SA-2-R 2-17-2017

FILE NAME =	USER NAME =	DESIGNED -	REVISED -
		CHECKED -	REVISED -
	PLOT SCALE =	DRAWN -	REVISED -
	PLOT DATE =	CHECKED -	REVISED -

STATE OF ILLINOIS
DEPARTMENT OF TRANSPORTATION

VAULTED ABUTMENT APPROACH SPAN
STRUCTURE NO.

F.A. RTE.	SECTION	COUNTY	TOTAL SHEETS	SHEET NO.

CONTRACT NO.

ILLINOIS FED. AID PROJECT