Illinois Department of Transportation

Culvert Manual

State of Illinois
Illinois Department of Transportation

0050-16, 07/16, web

Culvert Manual

Title Page

Prepared by:

Bureau of Bridges and Structures
Office of Program Development

Agency:

Illinois Department of Transportation

Place of Publication:

Springfield Illinois

2016

Table of Contents

Section 1 Introduction 1-1

Section 2 Planning 2-1
2.1 General Planning Process 2-1
2.1.1 Culvert Determination 2-1
2.1.2 Culvert Type Selection 2-1
2.1.3 Culvert Processing Requirements 2-2
2.1.4 Culvert Use Limitations 2-3
2.2 Concrete Box Culvert Types 2-4
2.2.1 Cast-in-Place Concrete Box Culverts 2-4
2.2.2 Precast Concrete Box Culverts 2-9
2.3 Hydraulics 2-13
2.4 Foundations 2-13
2.4.1 Settlement 2-13
2.4.2 Removal and Replacement of Unsuitable Material 2-15
2.4.3 Working Platform 2-18
2.4.4 Wingwalls 2-18
2.5 Constructability 2-20
2.5.1 Contractor Access 2-20
2.5.2 Minimum Clearance Width Requirements at the Stage Removal Line 2-20
2.5.3 Temporary Support System Requirements at Stage Removal Line 2-23
2.5.4 Stage Construction of New Cast-in-Place Box Culverts 2-25
2.5.5 Stage Construction of Precast Box Culverts 2-29
2.6 TSL Checklist 2-29
2.7 Example Type, Size, and Location Reports 2-34

Section 3 Design 3-1
3.1 Design Codes 3-1
3.2 Load Combinations 3-1
3.3 Load Modifiers 3-3
3.4 Loads 3-3

3.4.1 Fill Height 3-3
3.4.2 Dead Load- DC 3-5
3.4.3 Future Wearing Surface- DW and ES 3-5
3.4.4 Vertical Earth Pressure- EV 3-5
3.4.5 Horizontal Earth Pressure- EH, Earth Surcharge- ES, Live Load Surcharge- LS ... 3-6
3.4.6 Live Load Plus Impact – LL+IM 3-8
3.5 Design 3-11
3.5.1 Material Properties 3-11
3.5.2 Modeling, Reinforcement Orientation, and Design Span 3-11
3.5.3 Geometric Requirements 3-14
3.5.4 Flexural Resistance 3-14
3.5.5 Control of Cracking by Distribution of Reinforcement 3-14
3.5.6 Limitation on Maximum Reinforcement 3-15
3.5.7 Limitation on Minimum Reinforcement 3-15
3.5.8 Maximum Reinforcement Spacing 3-16
3.5.9 Minimum Reinforcement Spacing 3-16
3.5.10 Bar Size Limitations 3-17
3.5.11 Distribution, Temperature, and Shrinkage Reinforcement 3-18
3.5.12 Shear Capacity 3-21
3.6 Standard Design Tables for Single-Box Cast-in-Place Concrete Culverts 3-22

Section 4 Headwalls and Wingwalls 4-1
4.1 General 4-1
4.1.1 Loads 4-1
4.1.2 Types of Wingwalls and Applications 4-6
4.1.3 Wingwall Geometry 4-6
4.1.4 Reinforcement Design and Details 4-10
4.1.5 Headwalls 4-10
4.2 Horizontal Cantilever 4-17
4.2.1 Details 4-17
4.2.2 Design Chart 4-19
4.2.3 Design Examples 4-22
4.3 Two-Way Cantilever L-Type 4-25
4.3.1 Details 4-25
4.3.2 Design Table 4-28

4.3.3 Design Example 4-30
4.4 Vertical Cantilever T-Type..... 4-31
4.4.1 Details 4-31
4.4.2 Table Use 4-35
4.4.3 Design Example 4-44

Section 5 Design Aids 5-1
5.1 General 5-1
5.2 Base Sheets..... 5-11

List of Figures

Figure 2.2.1.2-1	Membrane Waterproofing for Cast-In-Place Culverts	2-6
Figure 2.2.1.3-1	Phoebe Nesting Site on Box Culvert	2-8
Table 2.2.2.1-1	Standard Precast Concrete Box Culvert Configurations	2-10
Figure 2.2.2.3-1	Membrane Waterproofing for Precast Culverts	2-12
Figure 2.4.2-1	Unsuitable Material Removal and Disposal Example	2-17
Figure 2.5.2-1	Stage Removal	2-22
Figure 2.5.3-1	Stage I Removal Skewed Box Culverts	2-24
Figure 2.5.4-1	Stage I Construction Headwall Sizes	2-26
Figure 2.5.4-2	Stage I Construction Geotextile Retaining Wall	2-28
Figure 3.4.1-1	Fill Height	3-4
Figure 3.4.5-1	Earth Pressure on Sidewalls	3-7
Figure 3.4.6-1	Distributing Load Through Fills	3-10
Figure 3.5.2-1	Design Span Reinforcement	3-13
Table 3.5.10-1	Bar Size Limitations	3-17
Figure 3.5.11-1	Top and Bottom Slab Details	3-19
Figure 3.5.11-2	Sidewall Details	3-20
Table 4.1.1.2-1	Earth Pressure	4-3
Figure 4.1.1.2-2	Lateral Earth Pressure Example Calculation	4-4
Figure 4.1.3.1-1	Wingwall Length and Drop	4-7
Figure 4.1.3.1-2	Wingwall Length Chart Horizontal and Vertical Cantilever	4-8
Figure 4.1.5-1	Headwall Reinforcement	4-12
Figure 4.1.5-2	Headwall Corner Dimensions	4-13
Figure 4.1.5-3	Headwall Corner Dimensions	4-14
Figure 4.1.5-4	Headwall Corner Dimensions	4-15
Figure 4.1.5-5	Headwall Dimensions Example	4-16
Figure 4.2.1-1	Horizontal Cantilever Wingwall Details	4-18
Table 4.2.2-1	Bar Sizes for Horizontal Cantilever Wingwalls	4-19
Figure 4.2.2-2	Horizontal Cantilever Wingwall Design	4-20
Figure 4.2.2-3	Horizontal Wingwall Design Chart	4-21
Figure 4.3.1-1	L-Type Two-Way Cantilever Wingwalls	4-26
Figure 4.3.1-2	L-Type Two-Way Cantilever Wingwall Counterfort Detail	4-27
Table 4.3.2-1	L-Type Two Way Cantilever Wingwalls	4-29

Figure 4.4.1-1 T-Type Vertical Cantilever Wingwalls 4-32
Figure 4.4.1-2 Stem Reinforcement Layout 4-33
Figure 4.4.1-3 Barrel Cutoff Walls for T-Type Vertical Cantilever Wingwalls..... 4-34
Figure 5.1-1 Reinforcement Bar Areas, Weights, and Perimeters..... 5-2
Figure 5.1-2 Reinforcement Bar Hook Dimensions..... 5-3
Figure 5.1-3 Culvert Extension with Existing Headwall to Remain 5-7
Figure 5.1-4 Culvert Extension with Existing Headwall Removed 5-8
Figure 5.1-5 Settlement Collar..... 5-9
Figure 5.1-6 Expansion Bolts Required for Culvert Extensions..... 5-10

Section 1 Introduction

As directed by the Engineer of Bridges and Structures, it is the responsibility of the Engineer of Bridge Design to develop, maintain, and administer the policies that govern the design and preparation of plans and specifications for all structures under the jurisdiction of the Department of Transportation. The vehicle by which this policy is controlled is the Bridge Manual.

This manual is a supplement to the Bridge Manual. The purpose of this manual is to aid in the design and detailing of reinforced concrete box culverts. Presented herein is a compilation of design procedures, design charts and tables, and standard tables. Base sheets, available at http://www.idot.illinois.gov/doing-business/procurements/engineering-architectural-professional-services/Consultants-Resources/bridges-and-structures-cadd-downloads-and-guidelines are referenced herein as well.

This manual is an active manual in the respect that as research, revised criteria, and AASHTO specification revisions dictate, new or revised sheets will be issued. It is strongly urged that as these sheets are received, they be immediately incorporated in the book so that the manual's integrity is maintained.

Section 2 Planning

This section of the Culvert Manual provides guidance for the majority of box culverts in Illinois, which are either precast concrete box culverts or cast-in-place concrete box culverts. Other culvert types, such as metal culverts and pipe culverts, will not be discussed in this manual.

The Bureau of Bridges and Structures is available to assist the Districts and local public agencies in resolving any problems that may arise during plan development and clarifying any questions relative to the interpretation of these requirements.

2.1 General Planning Process

2.1.1 Culvert Determination

The determination of whether a structure over a waterway should be a culvert, a three sided precast concrete structure, or a bridge is heavily influenced by hydraulic opening requirements. As the hydraulic opening becomes larger, the selection process for structure type progresses from culvert to three sided precast concrete structure to bridge. Cost, future maintenance, profile grade, staging, skew, soil conditions and alignment are also important variables which should be considered. Culverts generally have low future maintenance; however, culverts should not be considered for waterways with a history or potential of debris accumulation.

2.1.2 Culvert Type Selection

In general, precast concrete box culverts are more economical than cast-in-place concrete box culverts. One advantage of precast culverts is the economy that results from the duplication of forms, elimination of most falsework, and the need for only a small construction crew. Precast construction is particularly convenient in places where labor and material are not readily available. Use of precast units allows rapid repair or replacement of existing structures without detours and with minimum interference to traffic. However, complications such as poor soils, stage construction issues, and limited contractor access to the site may warrant the use of cast-in-place concrete box culverts. Discretion is given to the District or Owner on the use of precast concrete box culverts. Precast culverts are also an acceptable option for pedestrian tunnels.

2.1.3 Culvert Processing Requirements

2.1.3.1 Single Barrel Concrete Box Culverts

Existing culverts with a clear span greater than or equal to 6 ft. require a Bridge Condition Report (BCR). For state structures, new culverts with clear spans greater than or equal to 6 ft. require a structure number. New culverts do not require a Type Size and Location plan (TSL plan) if the design can be performed using the standard design tables found within this manual. Regardless of the clear span, a Hydraulic Report and Structure Geotechnical Report (SGR) and/or subsurface investigation will be required. The responsibility of development of design plans remains with the Districts, with assistance from the BBS as needed. BBS will provide assistance on design of new culverts not meeting Design Table requirements and in need of special design.

See the *Bureau of Local Roads and Streets Manual* for guidance on Local Agency culverts.

2.1.3.2 Multi-Barrel Cast-in-Place Concrete Box Culverts

For State structures, all new multi-barrel cast-in-place box culverts require a structure number. The plan preparation and structural design of this type of culvert remains with qualified consultants or the BBS in conformance with current plan development procedures. Items required to initiate the development of final detailed plans for culverts may include:

1. Bridge Condition Report (BCR)
2. Hydraulic Report
3. Structure Geotechnical Report (SGR) and subsurface investigation
4. TSL Plan

Additional references for the above items may be found in Section 2.2 and Section 2.3 in the Bridge Manual, as well as in “Bridge Condition Report Procedures and Practices,” an IDOT document.

See the *Bureau of Local Roads and Streets Manual* for guidance on Local Agency culverts.

2.1.3.3 Multi-Barrel Precast Concrete Box Culverts

Consistent with current processing procedures for all multi-barrel culvert projects, submittal of a BCR to the BBS for review and approval may be required for State structures.

For State structures, the option to use multi-barrel precast concrete box culverts is at the discretion of the Districts and should be decided prior to the TSL plan phase. If the location meets the foundation requirements and general guidelines and design limitations for a multi-barrel precast concrete box culvert, the Districts can undertake the final plan development.

The processing of TSL plans or final plans for multi-barrel precast concrete box culverts to the BBS for review and approval will not be required except for structures on the interstate system. See the *Bureau of Local Roads and Streets Manual* for guidance on Local Agency culverts.

2.1.4 Culvert Use Limitations

Cambering the box will not be allowed for precast concrete box culverts.

A minimum cover of 6 in., measured from the bottom of the pavement surface to the top of the top slab, taken at the roadway edge, shall be provided for precast concrete box culverts. Cast-in-place concrete box culverts may be used in zero-fill situations.

All headwalls for multiple-cell precast concrete box culverts shall be collared around the end of the precast sections. Due to the size and weight of these units, it is anticipated that headwalls for multiple-cell precast concrete box culverts will be cast-in-place similar to the details shown on Base Sheets MCB-AES-1 and MCB-AES-2. Individual precast end sections similar to those detailed in Base Sheets MCB-TES-1 and MCB-TES-2 may be used if hydraulically acceptable.

Precast concrete box culvert designs shall provide hydraulic equivalence to conventional cast-in-place designs. This may occasionally require a larger precast culvert size to compensate for the additional inlet losses and the adjustment to standard sizes.

The use of multiple cell precast concrete box culverts is not recommended under the following conditions:

a. Where high settlement could be anticipated.
b. Where design flood velocity and stream bed soils raise concern for scour.
c. Where clogging from debris or sedimentation is a concern.

The Bureau of Bridges and Structures shall be consulted before use of precast concrete box culverts in locations where high seismic activity may occur.

The BBS is available to assist the District and local agencies in working out any problems that may arise during final plan development and clarifications of any questions relative to the interpretation of these requirements.

2.2 Concrete Box Culvert Types

2.2.1 Cast-in-Place Concrete Box Culverts

2.2.1.1 Single-Barrel Cast-in-Place Concrete Box Culvert Design Tables

Standard designs for single-barrel cast-in-place concrete box culverts for a range of sizes from 3 ft. x 2 ft. to 12 ft. x 12 ft. are given in Section 3.6. For new cast-in-place concrete box culverts, the clear span and clear height should be dimensioned in 1 ft. increments. For extensions of existing culverts, cast-in-place concrete box culverts should be dimensioned and detailed according to current policy.

Designers should be aware that Article 540.08 of the Standard Specifications provides an option to the contractor to substitute a precast box when a cast-in-place box has been shown in the plans. If a precast box substitution is not desirable, the following note shall be added to the TSL and final Contract Plans:

Precast option is not allowed.

2.2.1.2 Cast-in-Place Concrete Box Culvert Waterproofing and Sidewall Drainage

All cast-in-place box culverts with 3 ft. or less of fill shall be waterproofed using Membrane Waterproofing for Culverts. When required, the Membrane Waterproofing for Culverts shall extend down the sidewall a minimum of 1 ft. below the joint between the top slab and sidewall. Weep holes shall be provided in the sidewalls.

For pedestrian tunnels, sidewall drainage shall be accomplished by using geocomposite wall drains and pipe underdrains for structures. Weep holes shall be omitted for these structures. See Figure 2.2.1.2-1 for details.

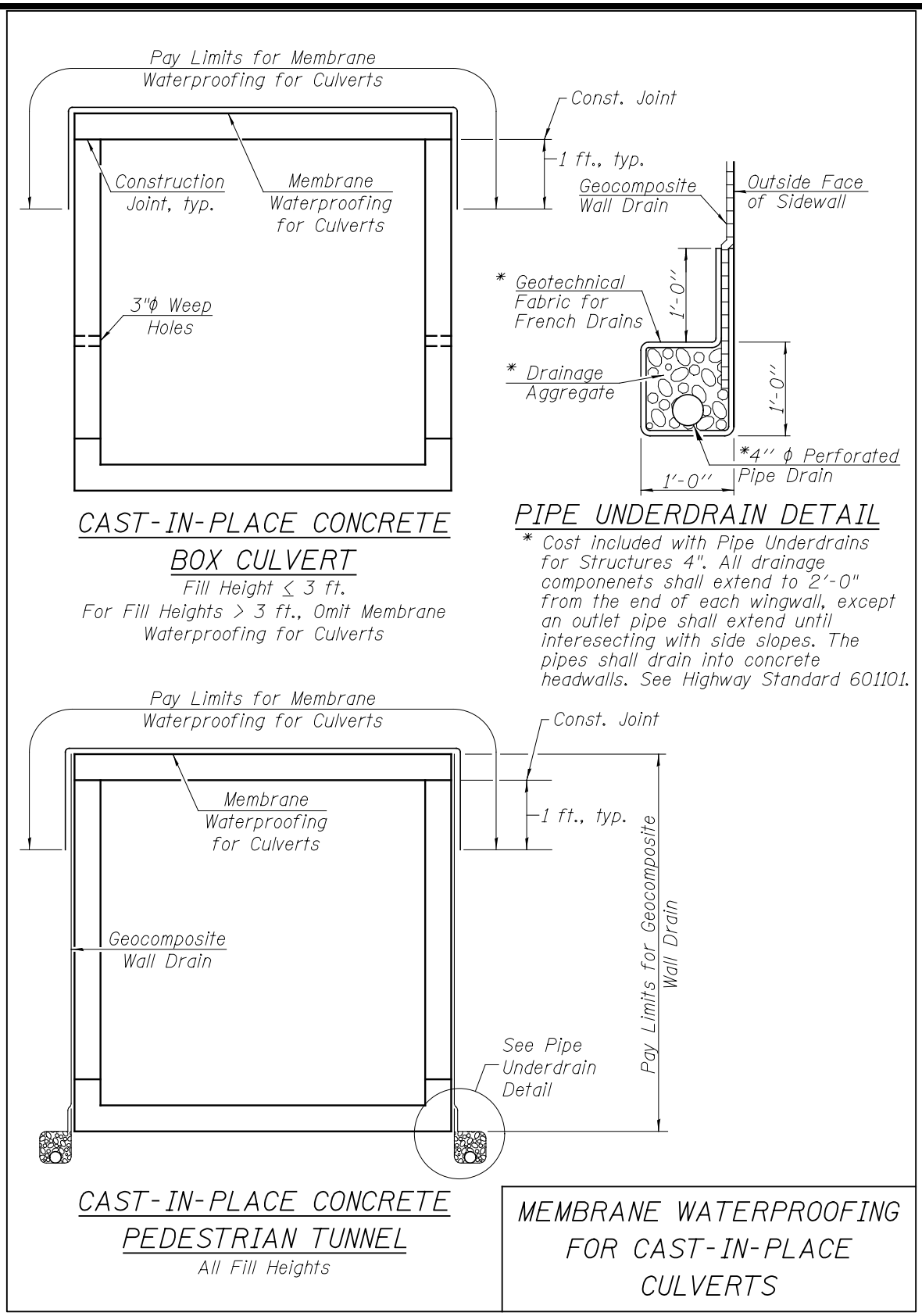

Figure 2.2.1.2-1

2.2.1.3 Phoebe Nesting Site Details

Multi-barrel cast-in-place culverts with a clear height of 4 ft. – 0 in. and greater shall be provided with phoebe nesting site details. These details consist of 1 in. ledges, 4 ft. – 0 in. long, on each side of all interior walls near the downstream end when these walls contain a single plane of reinforcement bars located at the wall center. These ledges provide suitable nesting sites for certain bird species (phoebes and barn swallows) that tend to nest in man-made shelters. The ledge detail is depicted in Figure 2.2.1.3-1.

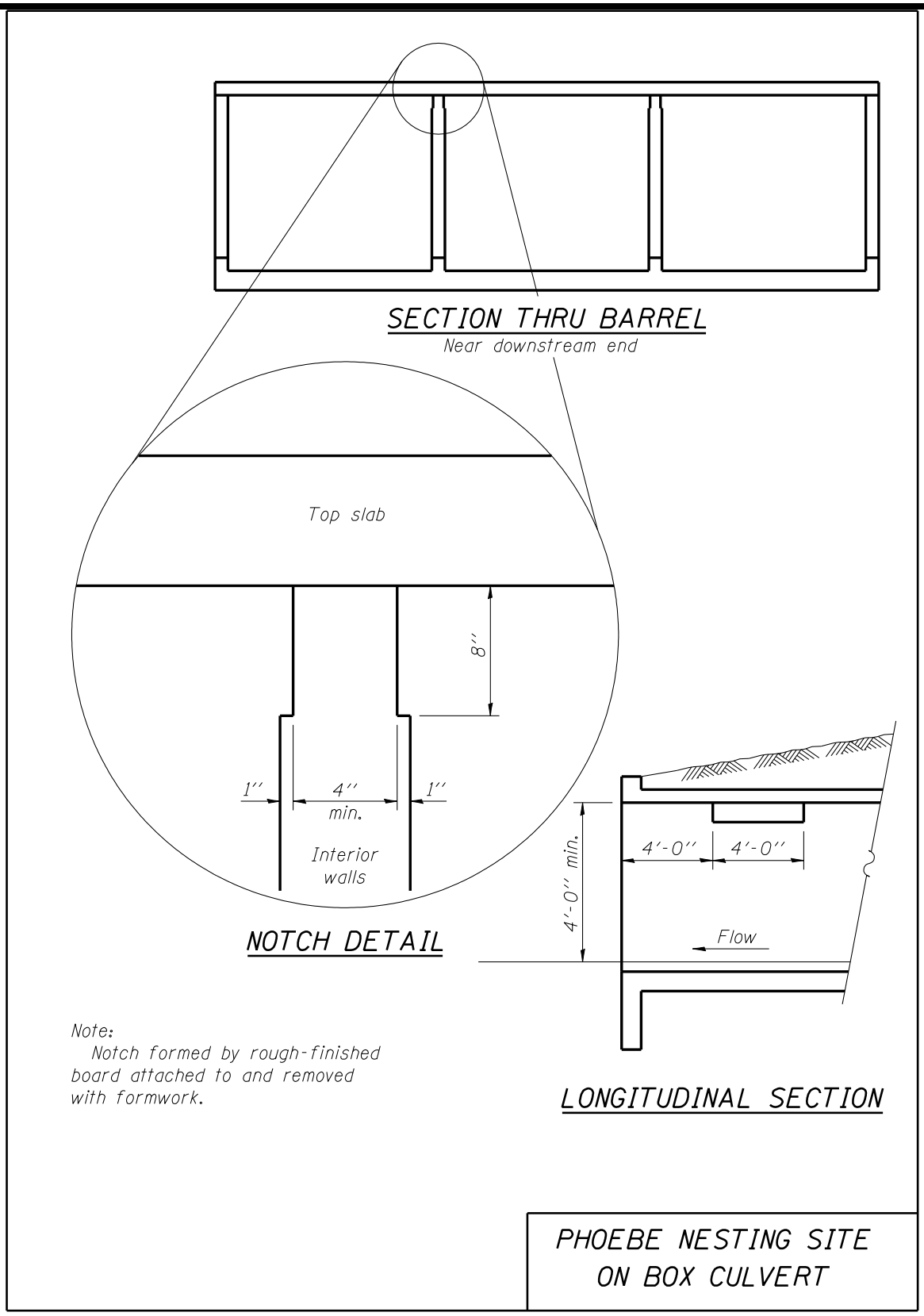

Figure 2.2.1.3-1

2.2.2 Precast Concrete Box Culverts

One advantage of precast culverts is the economy that results from the duplication of forms, elimination of most falsework, and the need for only a small construction crew. Precast construction is particularly convenient in places where labor and material are not readily available. Use of precast units allows rapid repair or replacement of existing structures with minimum interference to traffic.

Precast culverts may be manufactured using conventional structural concrete and forms (formed) or dry cast with vibrating form pipe making methods (machine-made). Standard sizes and dimensions are shown in ASTM C1577 and standard sizes are listed in Table 2.2.2.1-1.

Installation, Method of Measurement and Basis of Payment for Precast Concrete Box Culverts are included in the Standard Specifications. The Standard Specifications also require joints between units to be sealed to assure no embankment material is allowed to pass through.

2.2.2.1 Standard Precast Concrete Box Culvert Sections

Precast concrete box culverts range in size from 3 ft. x 2 ft. to 12 ft. x 12 ft., where the first number is the clear span and the second number is the rise, or clear height. The designs and details for these culverts are dictated by ASTM C1577 and Bureau of Design and Environment Special Provision. The culvert designs found in ASTM C1577 meet the requirements of the *AASHTO LRFD Bridge Design Specifications*. Standard precast concrete box culvert sizes are found in Table 2.2.2.1-1.

Standard Precast Concrete Box Culvert Configurations (Span x Rise – ft.)					
3 x 2	6 x 3	8 x 3	9 x 8	11 x 2	12 x 4
3 x 3	6 x 4	8 x 4	9 x 9	11 x 3	12 x 5
	6 x 5	8 x 5		11 x 4	12 x 6
4 x 2	6 x 6	8 x 6	10 x 2	11 x 5	12 x 7
4 x 3		8 x 7	10 x 3	11 x 6	12 x 8
4 x 4	7 x 2	8 x 8	10 x 4	11 x 7	12 x 9
	7 x 3		10 x 5	11 x 8	12 x 10
5 x 2	7 x 4	9 x 2	10 x 6	11 x 9	12 x 11
5 x 3	7 x 5	9 x 3	10 x 7	11 x 10	12 x 12
5 x 4	7 x 6	9 x 4	10 x 8	11 x 11	
5 x 5	7 x 7	9 x 5	10 x 9		
		9 x 6	10 x 10	12 x 2	
6 x 2	8 x 2	9 x 7		12 x 3	

Table 2.2.2.1-1

Planners considering a precast culvert should use standard sizes. The use of non-standard size boxes should be limited to structures with geometric limitations, such as extensions of existing non-standard culverts. Precast concrete box shapes not found in Table 2.2.2.1-1 are a special design and the designer shall provide the structural design in the contract plans.

2.2.2.2 Precast Concrete Box Culvert Plan Details

Precast concrete box culverts with precast concrete end sections require very few details on plan sheets. The plan and profile sheets in the roadway plans should state the box station location, size, maximum and minimum design fill heights, upstream and downstream invert elevations, and the culvert skew with respect to the roadway. The Contractor requires these details to be able to order the correct box from the precast concrete fabricator and properly install the culvert. Additional standard end section details may be required depending upon the

end section chosen. See Base Sheets SCB-TES, SCB-AES, MCB-TES, and MCB-AES for details. Note that these base sheets are all two sheets in length.

See Article 3.4.1 of this manual for direction on calculation of fill height.

2.2.2.3 Precast Concrete Box Culvert Waterproofing and Sidewall Drainage

All precast concrete box culverts under 3 ft. of fill or less shall be waterproofed using Membrane Waterproofing for Culverts. Precast concrete box culverts with more than 3 ft. of fill may be waterproofed at the request of the District. When waterproofing is required it shall extend down the sidewall a minimum of 1 ft. from the top of the culvert.

When used in a pedestrian tunnel application, the joints between precast concrete box culvert segments shall be sealed and the barrel covered with Membrane Waterproofing for Culverts. To provide for drainage, Geocomposite Wall Drains and Pipe Underdrains for Structures shall be used in lieu of weep holes. See Figure 2.2.2.3-1.

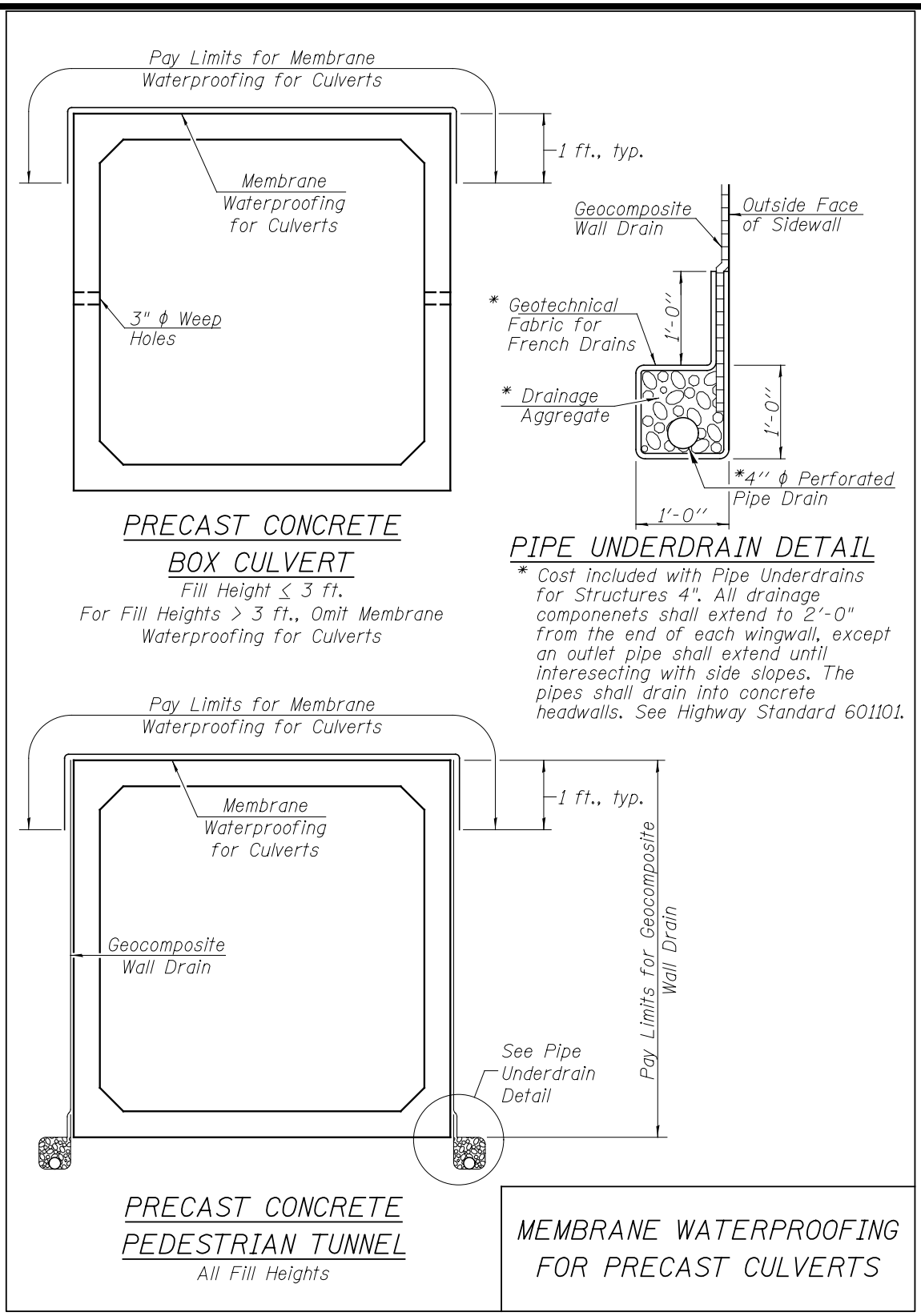

Figure 2.2.2.3-1

2.3 Hydraulics

The invert elevations of all culverts at stream crossing locations shall be set a minimum of 3 in. below the lowest point in the stream cross section. The intent is that culvert inverts will not become a barrier to fish migration during low water. The size of the culvert opening does not need to be increased to compensate for lowering the invert 3 in. Locations which may warrant lower invert elevations shall override this policy.

Scour or erosion at a bridge pier can create the possibility of catastrophic failure; however, since that is typically not the case at culvert structures, the FHWA does not mandate a calculation or evaluation of scour for this structure type. Although not considered a scour evaluation, the potential for damaging erosion, channel migration and aggradation\degradation are still addressed within the TSL plan development. This assessment can lead to the inclusion of such design features as riprap placement at one or both ends, cutoff walls, drop structures, energy dissipaters or even a change in structure type.

2.4 Foundations

Many of the foundation type issues discussed under Foundation Component Selection in Section 2.3.6.3 of the *Bridge Manual* are also applicable to foundations for box culverts. The SGR should provide planning and design recommendations to determine the most cost effective and feasible foundation treatment to be used on the TSL plans.

Box culverts have the following unique geotechnical issues that should be evaluated to ensure adequate long term performance of both the box and the wingwalls.

2.4.1 Settlement

The most common issues affecting the box portion of a culvert structure are mitigating differential settlement and ensuring constructibility of the bottom slab. Boxes are often located in existing stream channels where the new loading from a culvert and fill above will likely generate some settlement. It should be noted that the theoretical new loading at the base of the box is not as large as the new full height of soil fill loading adjacent to the box which can result in differential settlement along the roadway alignment. Since portions of the new box alignment

are often located on previously unloaded channel sediments while other segments may be placed through preloaded existing embankment, concern for differential settlement along the box alignment should also be considered. Consequently, it is critical that the designer and SGR author evaluate the variation in applied loadings as well as the changes in foundation soil conditions to determine if any ground modification is necessary.

2.4.1.1 Cast-in-Place Concrete Box Culverts

Cast-in-place boxes have some tolerance to span across settlement prone areas, but can crack when the differential foundation support is excessive. As an alternative to ground modification, a box can be designed and constructed in non-continuous segments which are jointed by collars to allow articulation and prevent overstress. Known as segmenting and cambering, the collar joints are placed at locations where changes in surcharge loading or foundation stiffness occur, and constructed at an elevation which will settle into the desired location. The most common configuration involves dividing the box into three segments with the center segment located directly below the level portion of the embankment. The center segment and its collars are detailed to be constructed above the desired flow line by 90 to 110% of the amount of estimated settlement, while the remaining outer segments slope from the collar to the top of the cutoff wall, which is normally located above the flow line by about 10 to 25% of the estimated settlement amount.

2.4.1.2 Precast Concrete Box Culverts

The use of multiple cell precast concrete box culverts set directly on rock should be avoided.

Precast boxes are articulated and can handle some differential settlement. However, when excessive movement is expected, the joints between the box sections can separate, causing the geotextile joint fabric to fail and allow soil to enter the box. In some cases, joint separation may decrease, causing contact and damage to the precast units. For these reasons, precast box culverts are normally only used at sites where minor amounts of settlement are expected or at locations where the foundation soils have been modified to mitigate settlement.

2.4.2 Removal and Replacement of Unsuitable Material

Where inadequate soil conditions are present to support the proposed loadings of either precast or cast-in-place boxes, removal of these soils and replacement with a coarse aggregate (or in less severe cases, re-compacted cohesive embankment) can be an economical treatment which provides the required stiffness or uniformity in foundation support. The cost effectiveness of this solution versus other ground modifications or structure type changes should be verified.

Removal and replacement is normally used when removal depths are not excessive, since concerns over cut slope stability or feasibility of stage construction soil retention can necessitate the use of other options. Removal and replacement also typically requires some field verification and adjustment to plan limits in order to address local problem zones or areas of uncertainty between borings. The designer should determine and show in the plan view the horizontal limits (stations and offsets) of the removal at the base of the excavation. The elevation view should show the elevations at the base of the removal. The plan and elevation removal limits should closely correspond to the boring data so that the inspector can determine the material the designer intends to be removed and what can remain. Since conditions encountered when excavation can differ, the Geotechnical and Field Construction Engineers may need to extend or reduce the limits to address the as encountered conditions. Along with the plan and elevation limits, the following note should be included.

> *The limits and quantities of removal and replacement shown are based on the boring data and may be modified by the District Geotechnical and Field Engineers for variable subsurface conditions encountered in the field.*

Excavation of unsuitable material shall be paid for as “Removal and Disposal of Unsuitable Material for Structures”. The replacement material and capping requirements are dependent upon the application, considering the anticipated loading, placement conditions, structure settlement tolerance, and cost of the replacement material. In cases such as replacement below box culverts where dewatering and compaction may not be possible, the pay item “Rockfill” is commonly used. In these cases, the following note should be added.

The Rockfill shall be capped with 6 in. of CA7 and satisfy the Standard Specifications unless otherwise indicated in the Special Provisions. The cost of the capping material shall be included in the pay item for Rockfill.

In cases where the replacement material strength requirements are less than Q_u=1.25 tsf., the placement conditions are well above the water table and quantities are relatively large, embankment can be specified as the replacement material since it is less expensive. Figure 2.4.2-1 gives an example of elevation and plan view details for removal and replacement.

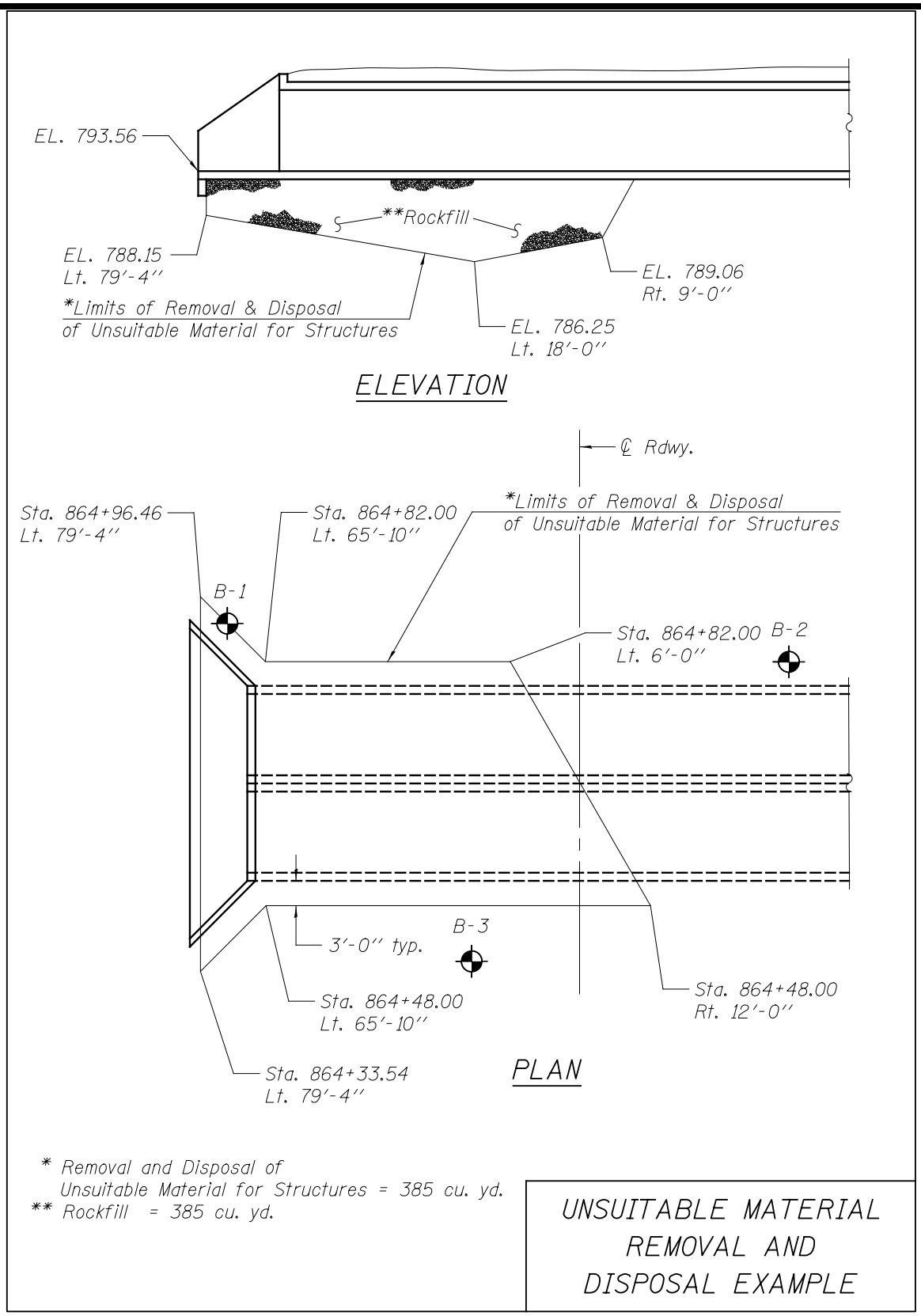
EL. 793.56
**Rockfill
EL. 788.15
Lt. 79'-4''
*Limits of Removal & Disposal
of Unsuitable Material for Structures
EL. 789.06
Rt. 9'-0''
EL. 786.25
Lt. 18'-0''
ELEVATION
℄ Rdwy.
Sta. 864+96.46
Lt. 79'-4''
Sta. 864+82.00
Lt. 65'-10''
*Limits of Removal & Disposal
of Unsuitable Material for Structures
B-1
Sta. 864+82.00
Lt. 6'-0''
B-2
B-3
3'-0'' typ.
Sta. 864+48.00
Lt. 65'-10''
Sta. 864+48.00
Rt. 12'-0''
Sta. 864+33.54
Lt. 79'-4''
PLAN
* Removal and Disposal of
Unsuitable Material for Structures = 385 cu. yd.
** Rockfill = 385 cu. yd.
UNSUITABLE MATERIAL
REMOVAL AND
DISPOSAL EXAMPLE

Figure 2.4.2-1

2.4.3 Working Platform

When no removal and replacement is required, the foundation soils can become unstable due to construction equipment loadings during excavation, rebar placement, forming and concrete placement. In these cases, the Contractor may need a working platform to properly construct the culvert bottom slab. The need for such platforms is dependent on the type, thickness and strength of the soils encountered, the method of water diversion selected by the Contractor, precipitation, construction sequence, and the time of the year the box is constructed.

Since the borings are often taken in locations that do not give the designer accurate information about the sediment in the channel and considering the many factors cited above that affect the need for a platform, the designer is usually not in a position to specify its use and thus should not specify working platforms in the plans. The Field Engineer or District Geotechnical Engineer should make the determination that a working platform is required during excavation based on the field conditions. Thus, any removal indicated on the plans is understood to be related to the long term foundation performance of the box and embankment, rather than a tool to facilitate construction. When the estimated water surface elevation of the stream water is 4 ft. or more above the streambed, construction of a water diversion system may be very difficult. Maintaining dry conditions for bottom slab construction can be problematic in granular foundation soils below the water table, as their permeability may not allow normal pumping to keep up with the water inflow through these soils.

2.4.4 Wingwalls

In addition to the geotechnical issues discussed above affecting the box portion of the culvert, the culvert wingwalls are the other important element that is heavily influenced by the foundation soils and wall backfill.

2.4.4.1 Horizontal Cantilever Wingwalls

In most cases, a horizontal cantilever wingwall is the most economical and preferred wall type. They are supported by the box rather than the foundation soils, and their feasibility evaluation is therefore structural rather than geotechnical.

2.4.4.2 L-Type Wingwalls

In cases where the culvert height and/or wing length/skew will not permit the use of horizontal cantilever wingwalls, L-type wingwalls may be used. The L-type wingwall is structurally connected to the box at the cutoff wall, via the wing footing/bottom slab connection, as well as vertically along the wall/culvert interface. The foundation soils, particularly those furthest from the box, assist in providing vertical and lateral support.

2.4.4.3 T-Type and Miscellaneous Type Wingwalls

When L-type wingwalls are inadequate, or if precast box culverts are used, other soil dependent/box-independent wingwalls should be used. These wingwalls include T-type, mechanically stabilized earth (MSE), gabion, sheet piling, soldier piling, apron supported, and precast modular. MSE walls are normally not economical due to the small quantity, and they raise concerns in some hydraulic applications about loss of granular backfill or foundation soils.

T-type wingwalls are fairly common as their aesthetics, alignment and foundation design can be modified to accommodate most any application. However, the resulting foundation expense, particularly when either a cofferdam or piles are required, may suggest that another wingwall type may be more appropriate.

Gabion wingwalls can be specified to follow a wide range of curved alignments and face batters. They can be placed through limited depths of water, but should be supported on reasonably good foundations soils to resist overturning and bearing pressures.

Sheet pile walls also allow installation through open water and at locations where bearing capacity may not be adequate for other wall types.

Soldier piles are used where sheeting cannot be driven, as H-piles can penetrate farther or can be drilled when required. However, they require either a cast-in-place or other facing system.

Standard designs for precast end sections for use with traversable pipe grates are given on Base Sheets SCB-TES and MCB-TES. These are preferred when adequate right-of-way is

provided. If adequate right-of-way is not provided, cast-in-place aprons are often used with precast boxes. Standard designs for cast-in-place apron end sections are given on Base Sheets SCB-AES and MCB-AES.

Various precast modular wingwall systems have also been used, most commonly with precast box culverts to make the entire structure precast.

2.5 Constructability

Issues such as contractor access, formwork removal, and stage construction can affect constructability of culverts.

2.5.1 Contractor Access

Precast concrete box culvert sections require equipment to lift them into place. For larger precast concrete box culvert sections, this equipment can become very large and issues may arise in areas of low clearances or narrow right-of-way. In these cases, use of a cast-in-place concrete box culvert may be required.

Use of cast-in-place concrete box culverts is strongly discouraged for culverts with less than four feet of rise or span. This is because the formwork required for the top slab is difficult to remove under such tight conditions. While tables are given in Chapter 3 for cast-in-place culverts as small as three feet by two feet, these tables are intended to be used when no other options are available.

2.5.2 Minimum Clearance Width Requirements at the Stage Removal Line

A temporary concrete barrier or temporary bridge rail is required at all stage removal lines.

A minimum of 1’-0” between the stage removal line and Stage I Construction should be provided to allow room for the contractor to install and remove formwork at the stage line. It will also provide clearance for the contractor to remove the remainder of the existing structure during Stage II removal without damaging the new culvert.

If soil retention on either side of the existing structure is required, temporary sheet piling or a temporary soil retention system is typically used. Geotextile walls are another alternate. Temporary sheet piling requires a minimum of 1 ft.- 6 in. clearance width for installation, and a temporary soil retention system may require more space due to the possible necessity of wales. This extra space requirement may force the planner to move the stage construction line, possibly causing right-of-way concerns or adding temporary pavement to the contract.

The distance from the Stage I Removal line to the inside edge of the traffic barrier shall be greater than or equal to 3'-6". For culverts with fill, the slope from the bottom of the existing pavement to the top of the existing structure should be assumed to be 1:1. See Figure 2.5.2-1.

If one foot or less of retained fill is required on top of culverts, a railroad tie or a similar non-structural headwall can be added to help retain the soil at the removal line. See Figure 2.5.2-1. This is minimally effective; little additional width is gained and may cause problems with clearance for a soil retention system. The railroad tie provides no additional structural strength at an unstiffened edge.

For culverts with large fills, a temporary soil retention system on top of the existing culvert may be required. The soil retention system should be assumed to be a minimum of 1'-6" wide. See Figure 2.5.2-1. For larger retained heights, assume a temporary retention system that requires a sheet and wale system will be required. This system may be significantly wider than 1'-6". Sheet pile and wale systems three feet in width are common, and even wider systems may be required if the retained height is very large. See Section 3.13.1 of the *Bridge Manual* for more details.

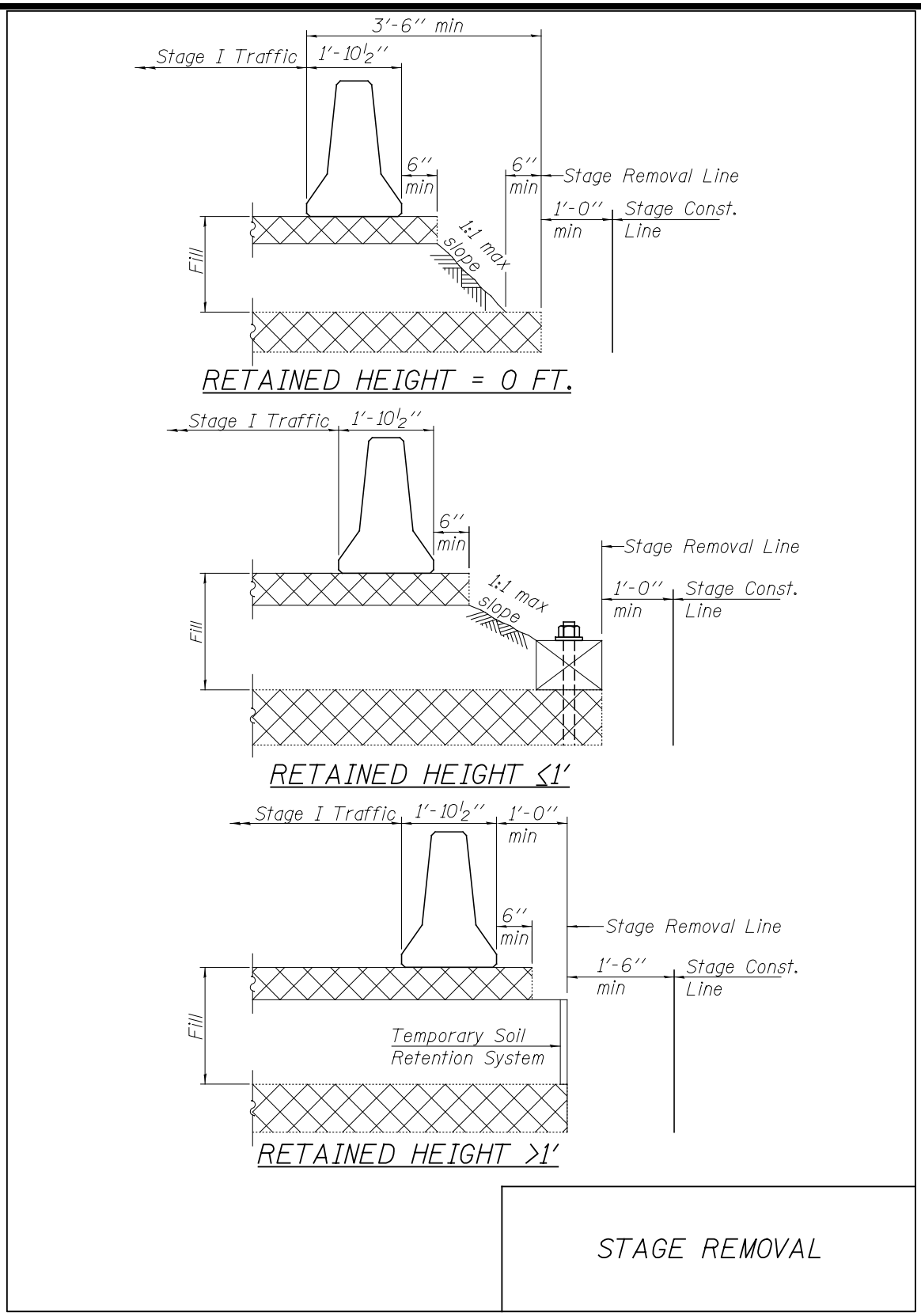
3'-6" min
Stage I Traffic
1'-10½"
6" min
6" min
Stage Removal Line
1'-0" min
Stage Const. Line
1:1 max slope
Fill
RETAINED HEIGHT = 0 FT.
Stage I Traffic
1'-10½"
6" min
Stage Removal Line
1'-0" min
Stage Const. Line
1:1 max slope
Fill
RETAINED HEIGHT ≤1'
Stage I Traffic
1'-10½"
1'-0" min
6" min
Stage Removal Line
1'-6" min
Stage Const. Line
Fill
Temporary Soil Retention System
RETAINED HEIGHT >1'
STAGE REMOVAL

Figure 2.5.2-1

2.5.3 Temporary Support System Requirements at Stage Removal Line

The adequacy of the existing structure to carry traffic under stage conditions must be assessed. Consideration must be given to the strength and stability of the structure once it has been partially removed and also to the overall condition of the structure. A structure may be found to be theoretically adequate to carry the loads, but because of deterioration there may be little confidence that it can do so safely.

The Stage I removal line is generally parallel to the centerline of the roadway. For existing skewed box culverts with reinforcement perpendicular to the sidewalls, this will require cutting of the primary reinforcement in the top and bottom slabs. See Figure 2.5.3-1. For skewed structures where the primary reinforcement is cut at the stage line, the edge of the stage I traffic lane should, if possible, be placed such that traffic is not allowed on top of the area where the reinforcement has been cut. See Figure 2.5.3-1. For small boxes in good condition with a skew < 30 degrees, a temporary support will not be required as long as the traffic is kept away from the edge. For concrete boxes that have skews greater than 30 degrees and/or are in poor condition, a temporary support system shall be used. A temporary support shall be used if any part of the traffic lane is on top of the unstiffened portion of the slab, or if a soil retention system has been installed on top of the culvert.

Some culverts with either very large skews or with very small skews may have been designed and built with the primary reinforcement placed parallel to the centerline of roadway. See Figure 2.5.3-1. The stage removal will not involve cutting the primary reinforcement and a temporary support will in most cases not be required.

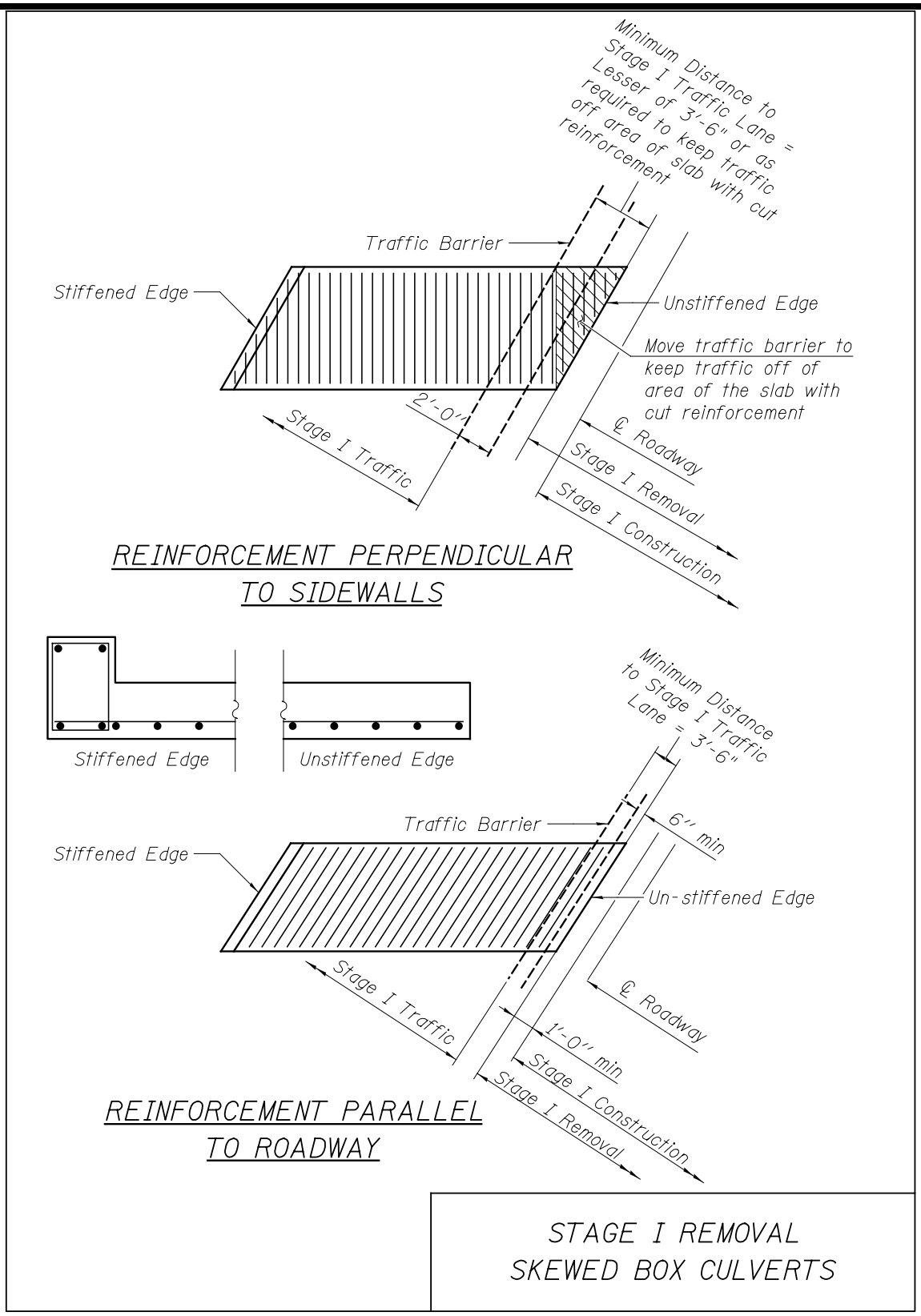
Minimum Distance to Stage I Traffic Lane = Lesser of 3'-6" or as required to keep traffic off area of slab with cut reinforcement
Traffic Barrier
Stiffened Edge
Unstiffened Edge
Move traffic barrier to keep traffic off of area of the slab with cut reinforcement
2'-0"
Stage I Traffic
℄ Roadway
Stage I Removal
Stage I Construction
REINFORCEMENT PERPENDICULAR TO SIDEWALLS
Stiffened Edge
Unstiffened Edge
Minimum Distance to Stage I Traffic Lane = 3'-6"
Traffic Barrier
6" min
Stiffened Edge
Un-stiffened Edge
Stage I Traffic
℄ Roadway
1'-0" min
Stage I Construction
Stage I Removal
REINFORCEMENT PARALLEL TO ROADWAY
STAGE I REMOVAL
SKEWED BOX CULVERTS

Figure 2.5.3-1

2.5.4 Stage Construction of New Cast-in-Place Box Culverts

Headwalls are required at stage construction lines for most new cast-in-place culverts. They are typically one foot wide and extend nine inches above the top slab of the culvert. See Figure 2.5.4-1.

An economical choice for smaller fills is a taller-than-normal headwall. An example of this is shown in Figure 2.5.4-1. The tall headwall acts as a retaining wall at the stage line.

The headwalls at the Stage Construction line may be eliminated if the headwall is either not feasible due to clearance problems with the pavement or if the Stage II traffic lane can be moved far enough away from the Stage I Construction line to keep traffic away from the un-stiffened edge. This is similar to the limitations for Stage I Traffic found in Section 2.5.2. The reinforcement bars placed in Stage I Construction are spliced to the bars in Stage II Construction with bar splicers. All bars in the slab are spliced; both longitudinal and primary bars. See Figure 2.5.4-1. This is a practical detail for culverts with little or no skew, or for skewed culverts where the main reinforcement is placed parallel to the stage construction line. However, this detail should be avoided for large skew culverts with the reinforcement placed perpendicular to the sidewalls because the formwork and bar splicer assembly placement at the stage line will become very complicated and time consuming.

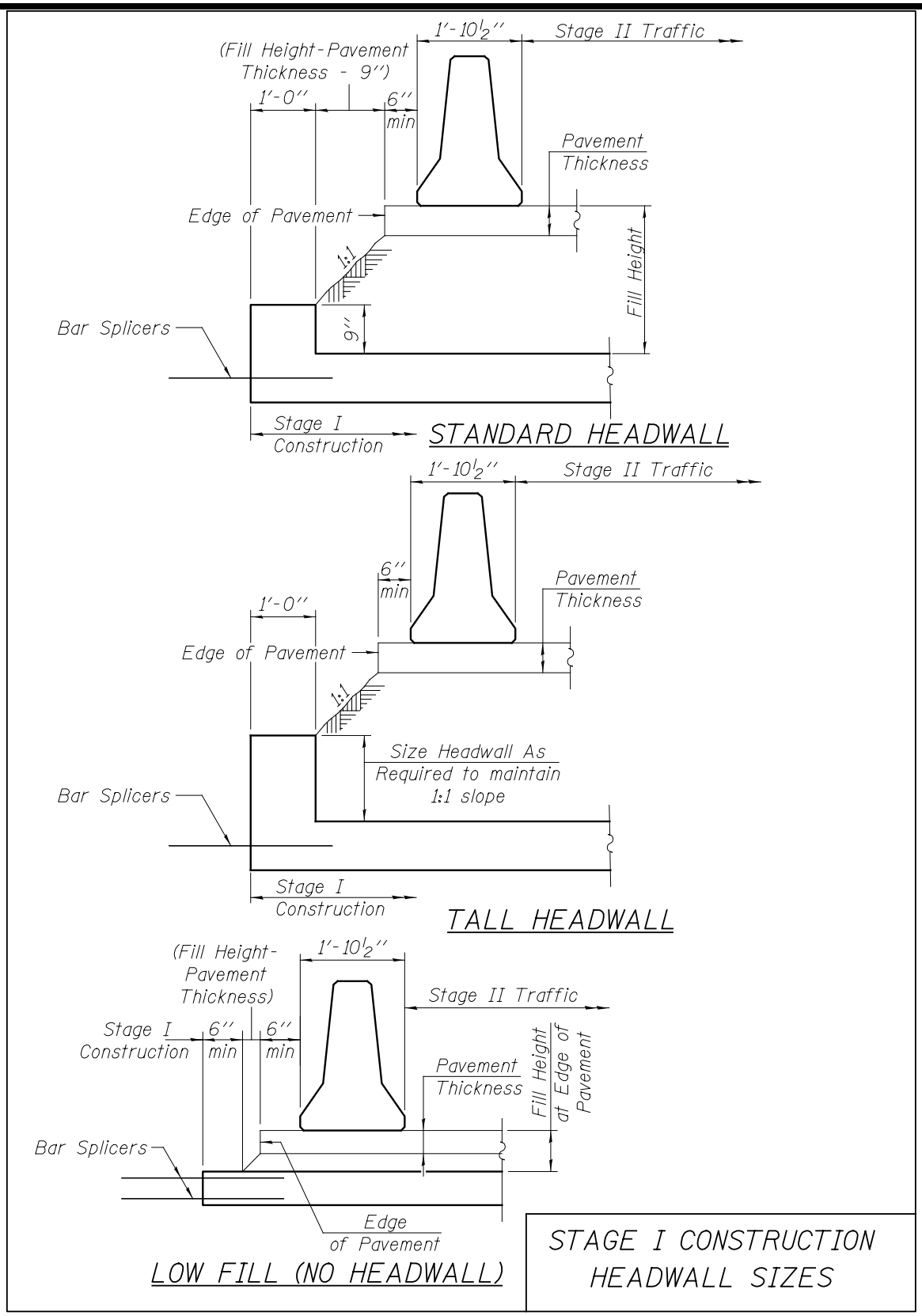
1'-10½"
Stage II Traffic
(Fill Height-Pavement Thickness - 9")
1'-0"
6" min
Pavement Thickness
Edge of Pavement
1:1
Fill Height
9"
Bar Splicers
Stage I Construction
STANDARD HEADWALL
1'-10½"
Stage II Traffic
6" min
Pavement Thickness
1'-0"
Edge of Pavement
1:1
Size Headwall As Required to maintain 1:1 slope
Bar Splicers
Stage I Construction
TALL HEADWALL
(Fill Height-Pavement Thickness)
1'-10½"
Stage II Traffic
Stage I Construction
6" min
6" min
Pavement Thickness
Fill Height at Edge of Pavement
Bar Splicers
Edge of Pavement
LOW FILL (NO HEADWALL)
STAGE I CONSTRUCTION HEADWALL SIZES

Figure 2.5.4-1

For projects where the fill height is such that the Stage II Traffic limitations cannot be met with a 1:1 slope, a geotextile retaining wall or a temporary soil retention system can be built to retain the soil on top of the box as shown in Figure 2.5.4-2. While there is no minimum height for a geotextile retaining wall, a cost analysis will usually show that these types of soil retention systems are economical for larger fill heights.

Geotextile retaining walls require a minimum of 4 ft. 6 in. from the Stage I Construction line to the Stage II traffic line. See Figure 2.5.4-2. A separate pay item is required when geotextile retaining walls are used. The planner should consult with their District's construction staff to discuss the amount of room that will be necessary to properly build the pavement in Stage I. In particular, clearance must be provided to allow for formwork or for equipment access along the side of the pavement and to prevent undermining. See Section 3.13.2 of the *Bridge Manual* for additional information and required details.

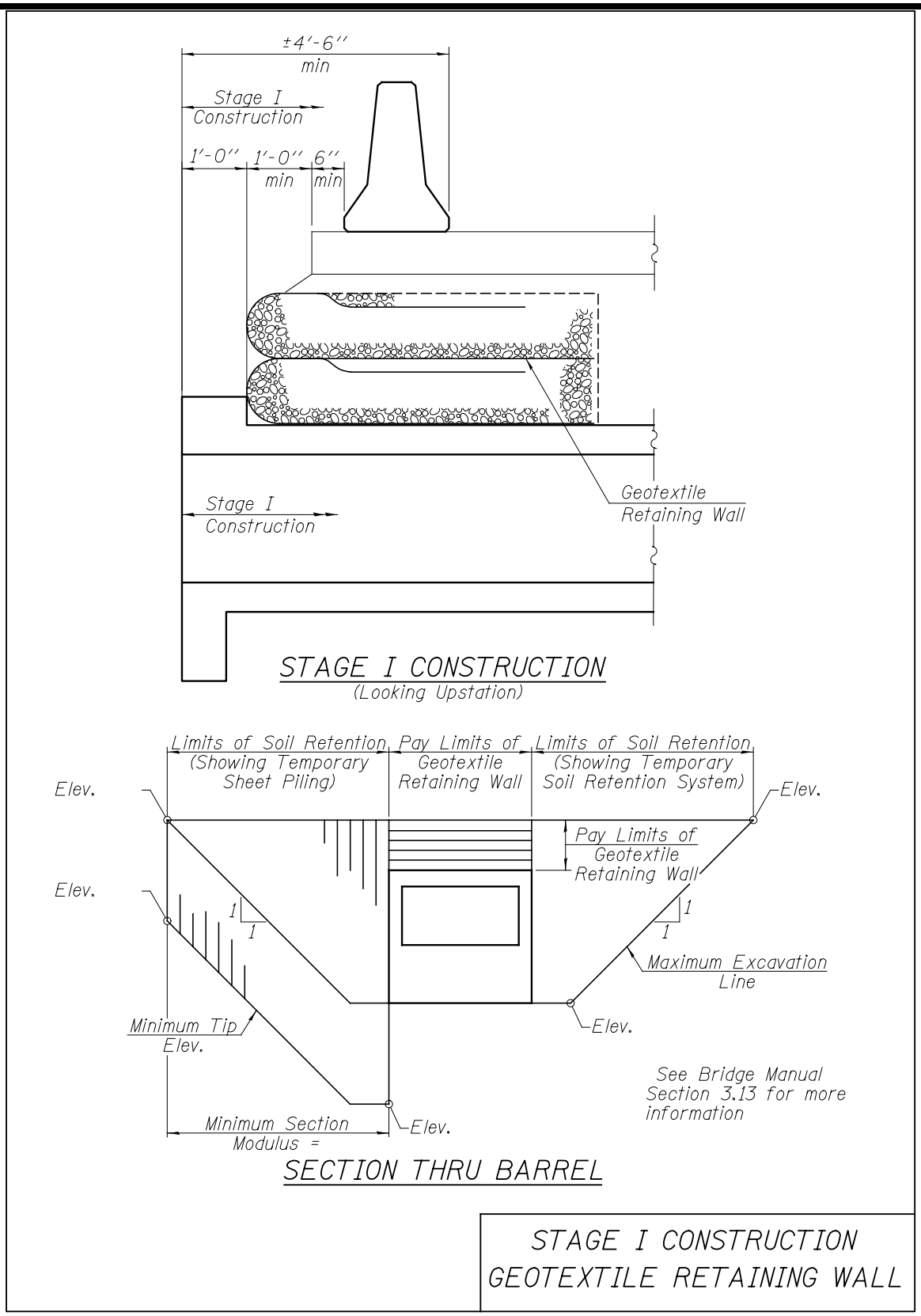
±4'-6''
min
Stage I
Construction
1'-0''
1'-0''
min
6''
min
Geotextile
Retaining Wall
Stage I
Construction
STAGE I CONSTRUCTION
(Looking Upstation)
Limits of Soil Retention
(Showing Temporary
Sheet Piling)
Pay Limits of
Geotextile
Retaining Wall
Limits of Soil Retention
(Showing Temporary
Soil Retention System)
Elev.
Elev.
Elev.
Pay Limits of
Geotextile
Retaining Wall
1
1
1
1
Maximum Excavation
Line
Elev.
Minimum Tip
Elev.
See Bridge Manual
Section 3.13 for more
information
Minimum Section
Modulus =
Elev.
SECTION THRU BARREL
STAGE I CONSTRUCTION
GEOTEXTILE RETAINING WALL

Figure 2.5.4-2

2.5.5 Stage Construction of Precast Box Culverts

Precast concrete box culverts do not have headwalls at stage construction lines.

The typical precast concrete box culvert segment is rectangular in shape and, for a skewed crossing, the end of the segment will not be parallel to the centerline of the roadway. This leads to a loss of stage II traffic lane widths. This could require additional culvert length to accommodate temporary widening and could have an impact on the extent of right of way purchase.

2.6 TSL Checklist

`

General

1. Check correspondence file, Bridge Condition Report, Structure Report, Structure Geotechnical Report, and Hydraulic Report to see that the TSL plan agrees with the listed reports and that the structure fits the site conditions.

Title Block

1. Label the page as “General Plan and Elevation”
2. List the following data:
    a. Roadway name/marked route over feature.
    b. Designated funding route and section number.
    c. County.
    d. Station at the center of the structure.
    e. Structure number. (New structure numbers are issued for bridges that do not reuse any part of the existing structure.)

Location Sketch

1. Provide a sketch that shows four sections of the township.
2. Label the range, township and principle meridian.
3. Provide a north arrow.

4. Call out the structure location.
5. Check names of major features on sketch.

Highway Classification

1. List the following data:
    a. Designated funding route and roadway name/marked route.
    b. Functional Class from the Illinois Structure Information System.
    c. ADT – Present and Future.
    d. DHV – Future.
    e. ADTT % (including single and multiple unit trucks).
    f. Design speed.
    g. Posted speed.

Loading (truck)

1. Provide the correct truck loading based on the design specification.
2. Show an allowance for Future Wearing Surface (FWS).
3. On rehabilitation projects, verify the structure can support the proposed future wearing surface and meet the required rating.

Design Specifications

1. Provide the applicable bridge design specifications.

Design Stresses

1. Provide the design stresses for Field and Precast units.
2. Provide a separate table for design stresses of existing elements that will be incorporated into new construction.
3. Verify the correct design stresses are shown for the proposed design method.

Upper Left Hand Corner Data

1. Provide a benchmark that matches the structure report and survey data.

2. Provide the existing structure number with the construction year and project name.
3. Provide a brief description of the existing structure.
4. Indicate the proposed method of traffic control for the proposed structure construction.
5. Indicate if any items of the existing bridge construction will be salvaged for future IDOT use.
6. Add a note stating “Precast alternate is not allowed” if site conditions require a cast-in-place culvert.

Waterway Information Table

1. Verify the numbers match the approved hydraulic waterway information table.
2. Verify the design high water elevation matches the elevation shown in the elevation view.

Profile Grade

1. Provide a profile grade that extends beyond the limits of the structure.
2. Show grade slopes, curve length, elevation and stations of PVC, PVT, & PVI.
3. Verify the profile grade matches the plan and profile sheet.
4. Indicate the roadway and location of the profile grade line.

Horizontal Curve Data

1. Provide horizontal curve data including the PI station, Δ, D, R, L, T, E, PC station, PT station, and SE.
2. Indicate superelevation and/or normal crown transition stations if the structure is located within a transition.

Section Through Barrel of Structure

1. Show size of barrel opening.
2. Show thickness of walls.
3. Show thickness of top slab.
4. For cast-in-place culverts, show bottom culvert slab 1 in. thicker than top slab.
5. Indicate culvert top and bottom slab thickness is subject to refinement during final

design.

6. If there is no fill on the CIP culvert, provide corbels.
7. Show construction joints 6 in. above the top of bottom slab for CIP culverts.
8. Show construction joints between walls and top slab for CIP culverts.
9. Indicate Phoebe nesting sites at downstream end of interior walls on CIP culverts.
10. The top and bottom slabs of multiple cell box culvert extensions should be designed as continuous members according to present design policies.

Longitudinal Section

1. Show lane, shoulder, median, barrier, and sidewalk widths.
2. Show roadway cross slopes.
3. Show profile grade location.
4. Show guardrail (if required)
    a. Verify guardrail placement behind curb (*BD&E Manual Chapter 38*)
    b. Verify slope "hinge point" is 3 ft. – 10 in. min. from face of guardrail (See Hwy. Std. 630001).
    c. If attaching guardrail to culvert, reference Hwy. Std. 630001. If guardrail will span culvert, reference Hwy. Std. 630101.
5. Show height of barriers and pedestrian rails.
6. Show upstream and downstream flow-line and invert elevations. (Set invert 3 in. below flow-line.)
7. Show design high-water elevation (at upstream end of culvert) and EWSE.
8. Show height and width of headwall.
9. Show stage traffic widths.
10. Show stage construction widths.
11. Verify stage construction is consistent with condition of existing bridge (and the District's desire).
12. Show temporary concrete barrier.
13. Show top and bottom slab thickness.
14. Verify the need for an edge beam on the top slab of cast-in-place culverts at the stage construction joint. (Note, an edge beam is typically not required if stage traffic is located further than half of the design live load distribution width from the stage construction joint.)
15. Show cutoff walls depth.

16. Show buried utilities
17. Plot natural ground line.

Plan View

1. Show dimension from out-to-out of headwalls (i.e. length along walls).
2. Show controlling culvert dimensions perpendicular to barrels.
3. Show approach roadway template.
4. Give skew angle.
5. Show width of headwall.
6. Show typical value of side-slopes in vicinity of culvert wingwalls.
7. Show station and elevation on profile grade at CL of culvert.
8. Show culverts with stationing increasing to the top of the page.
9. Show flow direction under roadway.
10. Show CL of culvert.
11. Indicate and check important horizontal clearances.
12. Show stage construction line and locate on roadway.
13. Show temporary construction details (sheet piling, geotextile wall, etc.) when applicable.
14. Show limits of existing structure.
15. Plot boring locations.
16. Show pipe culverts and local drainage near structure.
17. Show bridge approach slab if there is no fill on the culvert.
18. Show guardrail.
19. Show type of curb and gutter.
20. Show north arrow.

Stream Protection Details

1. Verify the need for stream protection (i.e. riprap, aprons, etc.) and show stream protection details as required.

2.7 Example Type, Size, and Location Reports

TSL Ex. 14 Straight Highway over Creek

- Two Barrel Box Culvert (Embankment Fill on Top Slab)

TSL Ex. 15 Straight Highway over Creek

- Three Barrel Box Culvert (No Embankment Fill on Top Slab)

Section 3 Design

This design section of the Culvert Manual provides guidance for cast-in-place concrete box culverts. The intent of IDOT culvert design policy is to design concrete box culverts in accordance with the *AASHTO LRFD Bridge Design Specifications* with few deviations. Designers should familiarize themselves with Chapter 12 of the design specifications prior to beginning their work.

3.1 Design Codes

The structural design of a new box culvert shall be in accordance with the specification shown on the approved Type, Size, and Location Report (TSL). If a TSL has not been prepared, the design shall be in accordance with the current edition of the *AASHTO LRFD Bridge Design Specifications.*

The structural design of widening of an existing box culvert shall be consistent with the design method used in the original design.

- Extensions of box culverts originally designed according to either the service load design method (ASD) or load factor design (LFD) method shall be designed using the load factor design (LFD) method according to the *AASHTO Standard Specifications for Highway Bridges 17th Edition 2002.*
- Extensions of box culverts, where the existing culvert was originally designed according to any edition of the *AASHTO LRFD Bridge Design Specifications,* shall be designed according to current edition of the *AASHTO LRFD Bridge Design Specifications*.

3.2 Load Combinations

As per Article C12.11.2 of the *AASHTO LRFD Bridge Design Specifications*, concrete box culverts shall be designed for the following Strength I load combinations.

Strength I maximum vertical load and maximum horizontal load:

$$\eta[(1.25)DC + (1.5)DW + (1.30)EV + (1.75)(LL+IM) + (1.35)EH_{max} + (1.50)ES_{max} + (1.75)LS)]$$

Strength I maximum vertical load and minimum horizontal load:

$$\eta[(1.25)DC + (1.5)DW + (1.30)EV + (1.75)(LL+IM)] + (1 / \eta)[(0.9)EH_{min} + (0.75)ES_{min}]$$

Strength I minimum vertical load and maximum horizontal load:

$$(1 / \eta)[(0.90)DC + (0.90)EV] + \eta[(1.35)EH_{max} + (1.75)LS]$$

Load modifiers (η factors) are given in Section 3.3 below. As per Article 1.3.2 of the *AASHTO LRFD Bridge Design Specifications,* for maximum load effects, the η factors are applied to the loads. For minimum load effects, a factor equal to the inverse of η is applied to the loads.

For serviceability checks, the following load case is applied. Note that η factors are not applicable to serviceability checks.

Service I vertical load and horizontal load:

$$1.00DC + 1.00DW + 1.00EV + 1.00(LL+IM) + 1.00EH_{max} + 1.00ES_{max} + 1.00LS$$

DC, DW, EV, LL, IM, EH, ES, and LS are load types, defined in Chapter 3 of the *AASHTO LRFD Bridge Design Specifications* and further clarified in this manual.

As per Article 5.5.3.1 of the *AASHTO LRFD Bridge Design Specifications*, reinforced concrete box culverts need not be analyzed for fatigue.

According to Article 3.10.1 of the *AASHTO LRFD Bridge Design Specifications*, buried structures are not designed for seismic effects. Wingwalls and retaining walls adjacent to culverts are considered parts of the buried structures. As such, they also are not designed for the seismic loading effects given in Articles 11.5.4 and 11.6.5 of the *AASHTO LRFD Bridge Design Specifications*, regardless of the adjusted peak ground acceleration (PGA) or liquefaction concerns.

3.3 Load Modifiers

The following load modifiers η for ductility, redundancy and operational classification shall be applied to the Strength I load combination force effects for all box culverts:

- η_d = 1.0 for ductility
- η_r = 1.05 for redundancy
- η_I = 1.0 for operational importance, for culverts with fill heights less than 15 feet
- η_I = 1.05 for operational importance, for culverts with fill heights greater than or equal to 15 feet

3.4 Loads

Loads and live load distribution shall be in accordance with Article 12.11.2 of the *AASHTO LRFD Bridge Design Specifications* except as noted.

3.4.1 Fill Height

The fill height used in the determination of the live load distribution shall be the difference in elevation between the top of the pavement and the top of the top slab. The thickness of the Future Wearing Surface on the calculation of fill height shall be ignored.

For culvert design purposes, the roadway width is defined as the distance from one outside edge of paved shoulder to the outside edge of the other paved shoulder. The design fill heights shall be the maximum and minimum fill heights calculated within this distance. See Figure 3.4.1-1. Fill heights may be rounded to the nearest foot. The controlling fill condition shall be used for the design of the entire culvert. For culverts with a maximum fill height less than 5 feet, the lesser fill height will most likely control.

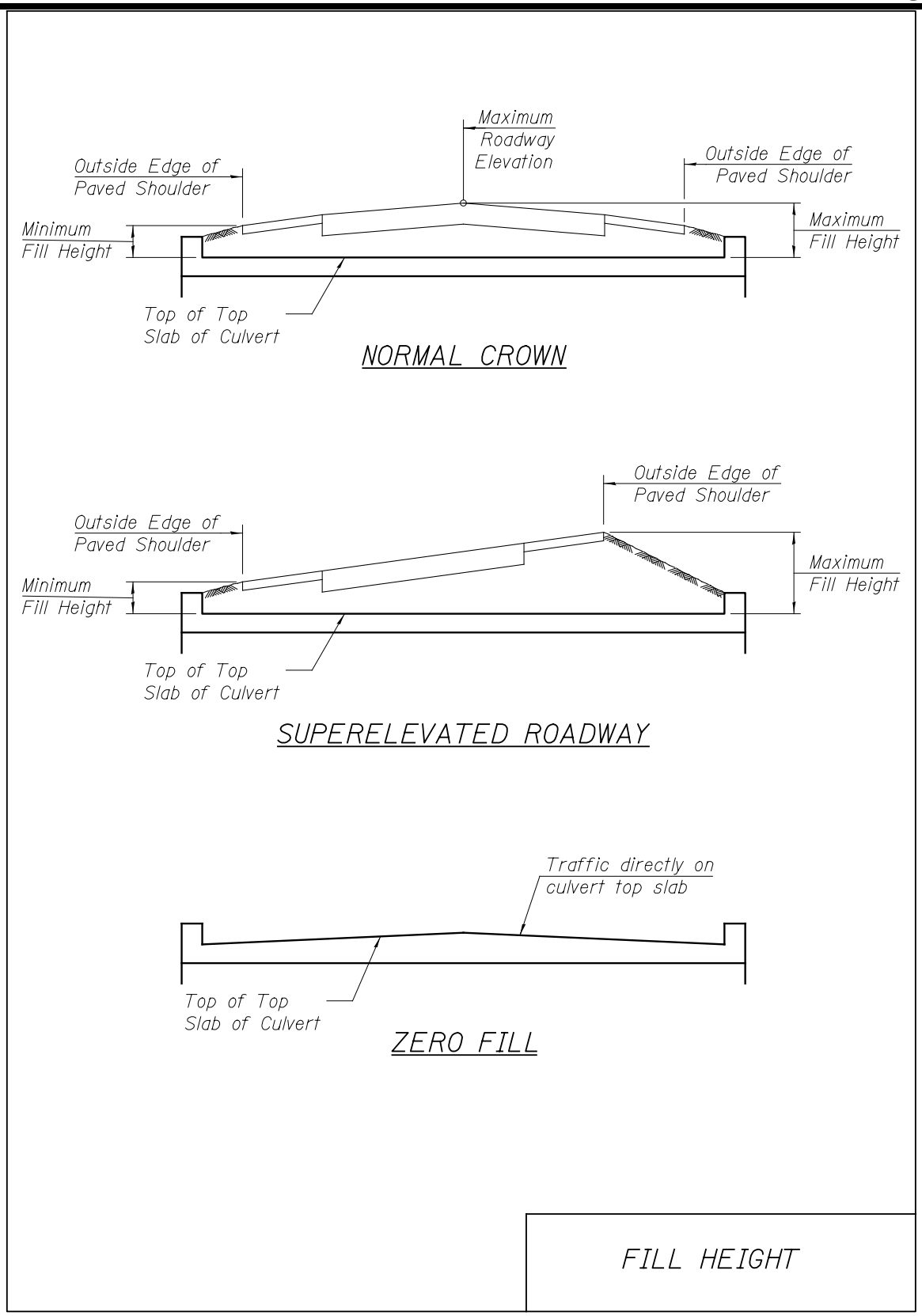
Maximum
Roadway
Elevation
Outside Edge of
Paved Shoulder
Outside Edge of
Paved Shoulder
Minimum
Fill Height
Maximum
Fill Height
Top of Top
Slab of Culvert
NORMAL CROWN
Outside Edge of
Paved Shoulder
Outside Edge of
Paved Shoulder
Minimum
Fill Height
Maximum
Fill Height
Top of Top
Slab of Culvert
SUPERELEVATED ROADWAY
Traffic directly on
culvert top slab
Top of Top
Slab of Culvert
ZERO FILL
FILL HEIGHT

Figure 3.4.1-1

For culverts where the fill height varies by over ten feet, portions of the culvert may be designed for differing fill heights, subject to coordination and concurrence with the Bureau of Bridges and Structures.

3.4.2 Dead Load- DC

For the calculation of concrete dead loads, the unit weight of reinforced concrete (γ_c) shall be 150 pcf.

Unless otherwise specified on the TSL Report, a 12 in. thick pavement and shoulder shall be assumed to be present for the purpose of load calculation. The unit weight of the pavement shall be assumed to be 150 pcf for both concrete and asphalt pavement.

3.4.3 Future Wearing Surface- DW and ES

Unless otherwise specified on the TSL Report, a future wearing surface with a weight of 50 psf shall be assumed to be present. The presence of a future wearing surface shall not be assumed to be fill and shall not be used to change the assumed live load distribution. For the purpose of design, DW shall be considered to be a surcharge load (ES) on the culvert.

3.4.4 Vertical Earth Pressure- EV

Vertical earth pressure shall be calculated assuming an embankment installation. See Article 12.11.2.2 of the *AASHTO LRFD Bridge Design Specifications*. Unless otherwise specified on the TSL Report, the unit weight of soil on top of the box culvert (γ_s) shall be assumed to be 120 pcf.

For the purpose of determining the load factor from Table 3.4.1-2 of the *AASHTO LRFD Bridge Design Specifications*, box culverts with pinned corners, which is the standard IDOT model for cast-in-place culverts, are considered rigid buried structures. Trench installation and positive projection may not be used to reduce loads on the culvert due to incompatibility with the *IDOT Standard Specifications for Road and Bridge Construction* and normal construction techniques.

3.4.5 Horizontal Earth Pressure- EH, Earth Surcharge- ES, Live Load Surcharge- LS

Figure 3.4.5-1 illustrates the load application of horizontal earth pressure (EH), earth surcharge (ES), and live load surcharge (LS).

The horizontal earth pressure (EH) on the culvert sidewalls shall be calculated assuming at rest conditions with earth pressure coefficient k_o equal to 0.5. The unit weight of backfill shall be assumed to be 120 pcf, which results in an equivalent fluid pressure of 60 pcf. Note that this is a significant increase from past specifications and will result in higher forces in sidewalls.

The minimum horizontal earth pressure shall be 50% of the maximum pressure in accordance with Article 3.11.7 of the *AASHTO LRFD Bridge Design Specifications*.

The backfill shall be assumed to be drained for dry conditions and wet conditions. The effects of water (WA) may be ignored in load calculations.

Earth surcharge (ES) is added in non-zero fill conditions. It is a rectangular load based on the equivalent fluid pressure and the fill height.

Live load surcharge (LS) shall be applied to all culverts regardless of fill height and shall be calculated according to Article 3.11.6.4 of the *AASHTO LRFD Bridge Design Specifications.* The fill height of soil used in LS calculations shall be the same as that used in EV calculations. Table 3.11.6.4-1 *Equivalent Height of Soil for Vehicular Loadings on Abutments Perpendicular to Traffic* found in the *AASHTO LRFD Bridge Design Specifications* shall be used for culverts of all skews.

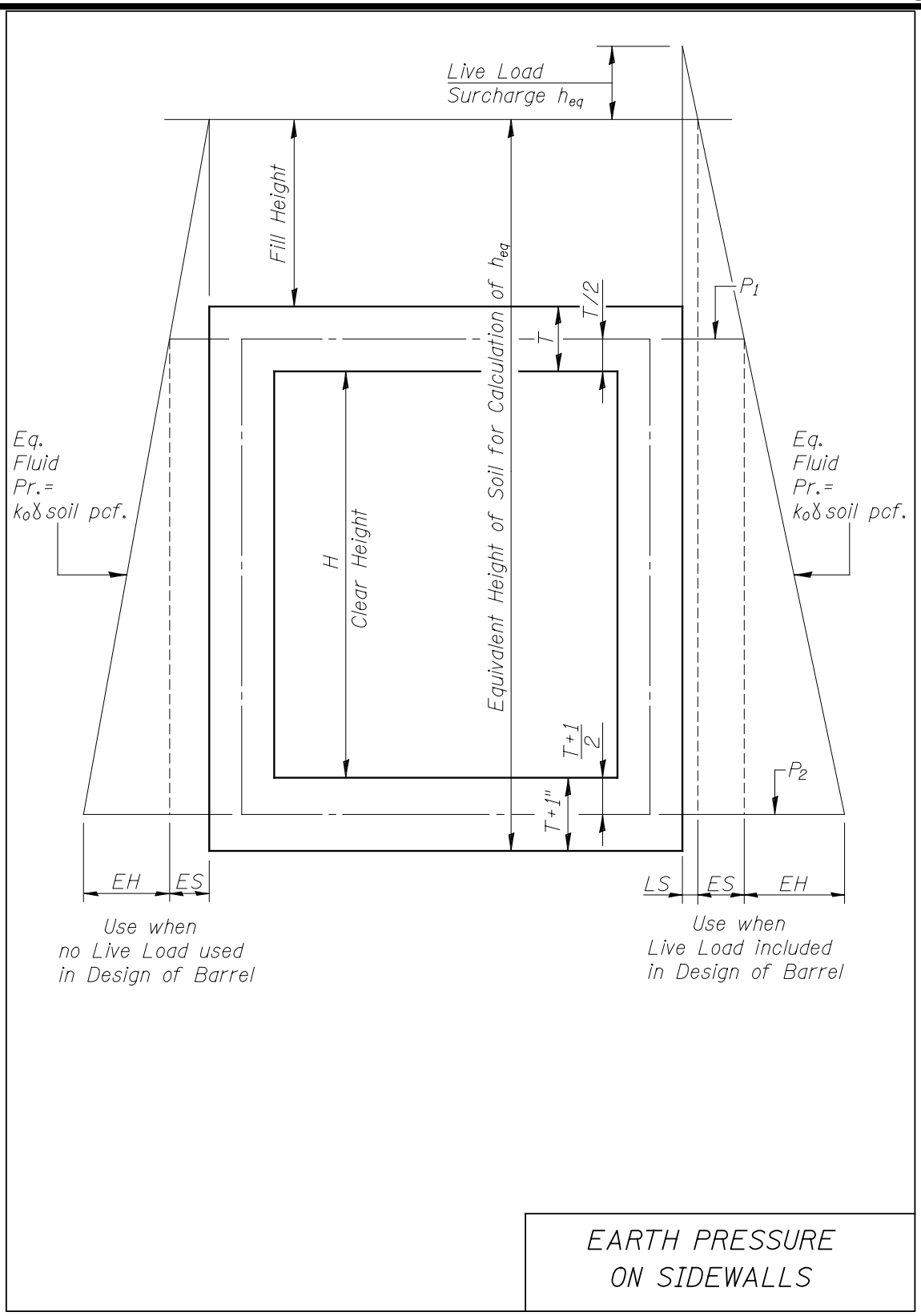
Live Load
Surcharge h_{eq}
Fill Height
Equivalent Height of Soil for Calculation of h_{eq}
T/2
T
P_1
Eq.
Fluid
Pr.=
$k_0\gamma$ soil pcf.
H
Clear Height
$\frac{T+1}{2}$
T+1"
P_2
EH
ES
LS
ES
EH
Use when
no Live Load used
in Design of Barrel
Use when
Live Load included
in Design of Barrel
EARTH PRESSURE
ON SIDEWALLS

Figure 3.4.5-1

3.4.6 Live Load Plus Impact – LL+IM

Live load shall be determined according to Article 3.6.1.3.3 of the *AASHTO LRFD Bridge Design Specifications.* For the purpose of interpretation of this article relative to when live load effects can be neglected, the term "span length" may be interpreted as "clear span". For example, a single 8x6 box culvert with 8.1 feet of fill need not be designed for live load. Likewise, for the design of multiple barrel box culverts, the effects of live load may be neglected when the fill height is greater than the distance between the inside faces of the exterior walls. Loading for single box culverts shall be from one vehicle and a Multiple Presence Factor of 1.2 shall be applied. The past practice of calculating loads produced by side by side trucks has been discontinued in the *AASHTO LRFD Bridge Design Specifications*. Lane load is not considered in the design of box culverts.

Live load is distributed to the culvert over an area determined by one of two methods. For culverts with less than two feet of fill (contact loading), the load is distributed over an area determined using provisions in Article 4.6.2.10 of the *AASHTO LRFD Bridge Design Specifications*. For culverts with fills two feet in height or greater, the load is distributed through the fill using the provisions of Article 3.6.1.2.6b of the *AASHTO LRFD Bridge Design Specifications*, using a distribution factor of 1.15.

Article 3.6.1.2.6 states that if the moments caused by distributing wheel or axle loads through fill exceed those caused by contact loading, the moments caused by contact loading shall be used. For smaller fills, this may result in contact loading being used in lieu of distributing the load through the fill, even though the force effects due to contact loading are less.

To simplify calculations when distributing load through fills, the live load patch for the design truck or tandem may be taken as the combination of both wheels for trucks or all four wheels for tandems. The assumption of one larger patch load with a lesser intensity results in higher moments than the assumption of two smaller patch loads with greater intensity. See Figure 3.4.6-1 for more information.

Impact shall be calculated according to Article 3.6.2.2 of the *AASHTO LRFD Bridge Design Specifications.*

The past practice of ignoring distribution of live load in the direction of movement for fills < 2 feet is discouraged. Whereas the requirement to check shear in culverts with fills < 2 feet was not in the *AASHTO Standard Specifications for Highway Bridges,* the LRFD Specifications require shear be checked. Shear may control the design of top slab thickness for culverts with shallow fills. Distributing the load in the direction of movement will reduce the calculated shear forces and allow for slabs thinner than those found if determined by assuming point loads.

For single box culverts, the effects of skew are not considered unless traffic is moving perpendicular to the span, i.e. a 90 degree skew. For multiple box culverts, the effects of skew shall be considered when the skew exceeds 30 degrees.

When the effect of skew is considered, the culvert shall be designed for traffic travelling parallel to the span and traffic travelling perpendicular to the span. The provisions of Article 4.6.2.1 of the *AASHTO LRFD Bridge Design Specifications* shall be used for the condition of traffic moving perpendicular to the span.

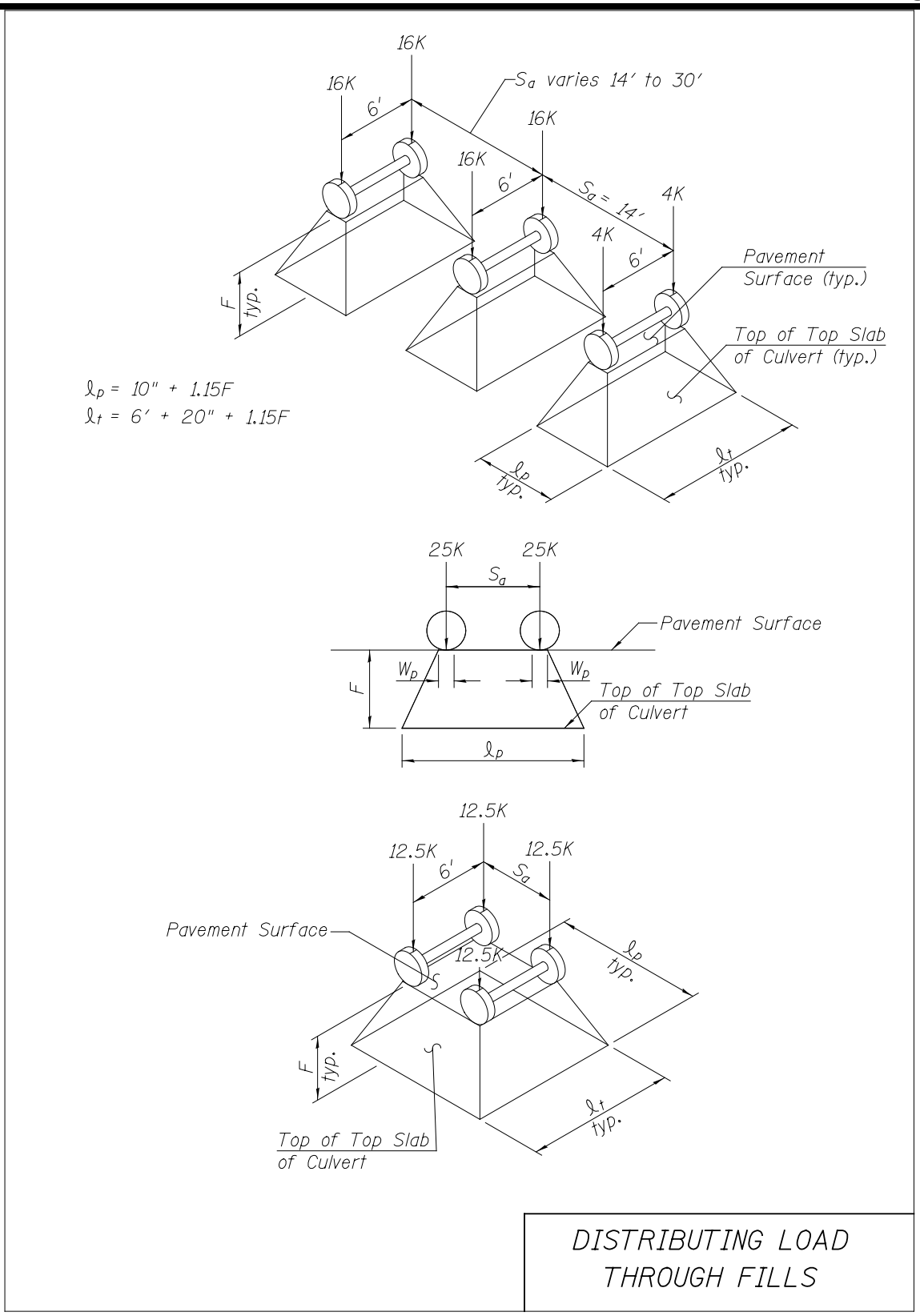
16K
16K
6'
S_a varies 14' to 30'
16K
16K
6'
S_a = 14'
4K
4K
6'
Pavement Surface (typ.)
Top of Top Slab of Culvert (typ.)
F typ.
ℓ_p = 10" + 1.15F
ℓ_t = 6' + 20" + 1.15F
ℓ_p typ.
ℓ_t typ.
25K
25K
S_a
Pavement Surface
W_p
W_p
F
Top of Top Slab of Culvert
ℓ_p
12.5K
12.5K
12.5K
6'
S_a
Pavement Surface
12.5K
ℓ_p typ.
F typ.
ℓ_t typ.
Top of Top Slab of Culvert
DISTRIBUTING LOAD THROUGH FILLS

Figure 3.4.6-1

3.5 Design

All components shall be designed for flexure, serviceablility, and shear. Detailing requirements, consisting of minimum and maximum reinforcement areas and spacings also apply.

All reinforcement shall have a clear cover of two inches. This increase in clear cover is intended to provide additional durability.

Epoxy-coated reinforcement shall be used in all concrete box culverts with zero-fill situations.

3.5.1 Material Properties

Unless otherwise approved by the Bureau of Bridges and Structures, material properties shall be as follows:

Concrete Unit Weight γ_c (for calculation of E_c)	145 pcf
Concrete Unit Weight γ_c (for load calculations)	150 pcf
Concrete Compressive Strength, f'_c	3.5 ksi
Reinforcement Bars Yield Strength, f_y	60 ksi
Modulus of Elasticity of Concrete, E_c	See AASHTO LRFD Eq. 5.4.2.4-1
Modular Ratio, n	29000 ksi / E_c

3.5.2 Modeling, Reinforcement Orientation, and Design Span

Top and bottom slabs of cast-in-place concrete box culverts shall be considered to be pinned at the centerline of all adjacent walls.

For multi-span culverts, the critical section for moment at interior supports may be taken at the face of the interior wall. However, it is simpler and more conservative to take it at the centerline of the interior wall, which is also acceptable.

For the purpose of determining forces in sidewalls, the design span shall be assumed to be the distance from the center of the top slab to the center of the bottom slab. The sidewalls shall be considered to be pinned to the top and bottom slabs at these locations.

For culverts without stage construction, main reinforcement in top and bottom slabs shall be placed perpendicular to the sidewalls, and the design span shall be assumed to be the center-to-center distance from one support to the next support, measured perpendicular to sidewalls.

For culverts with stage construction and skews less than 50 degrees, main reinforcement in top and bottom slabs shall be placed parallel to the headwalls. The design span for these culverts shall be assumed to be the center-to-center distance from one support to the next support measured perpendicular to the sidewalls. The amount of main reinforcement required for this design span shall then be multiplied by the secant squared of the skew ($\sec^2$ (skew angle)), and the resulting amount of reinforcement shall be placed in the culvert.

For culverts with stage construction and skews greater than or equal to 50 degrees, main reinforcement in top and bottom slabs shall be placed parallel to the headwalls. The design span for these culverts shall be assumed to be the center-to-center distance from one support to the next support measured parallel to the headwall.

See Fig. 3.5.2-1 for additional details.

If the amount of reinforcement required for highly skewed culverts with stage construction becomes excessive, the main reinforcement may be placed perpendicular to supports, with the design span measured perpendicular to supports. This often results in difficult formwork and reinforcement placement along the stage construction line and is discouraged.

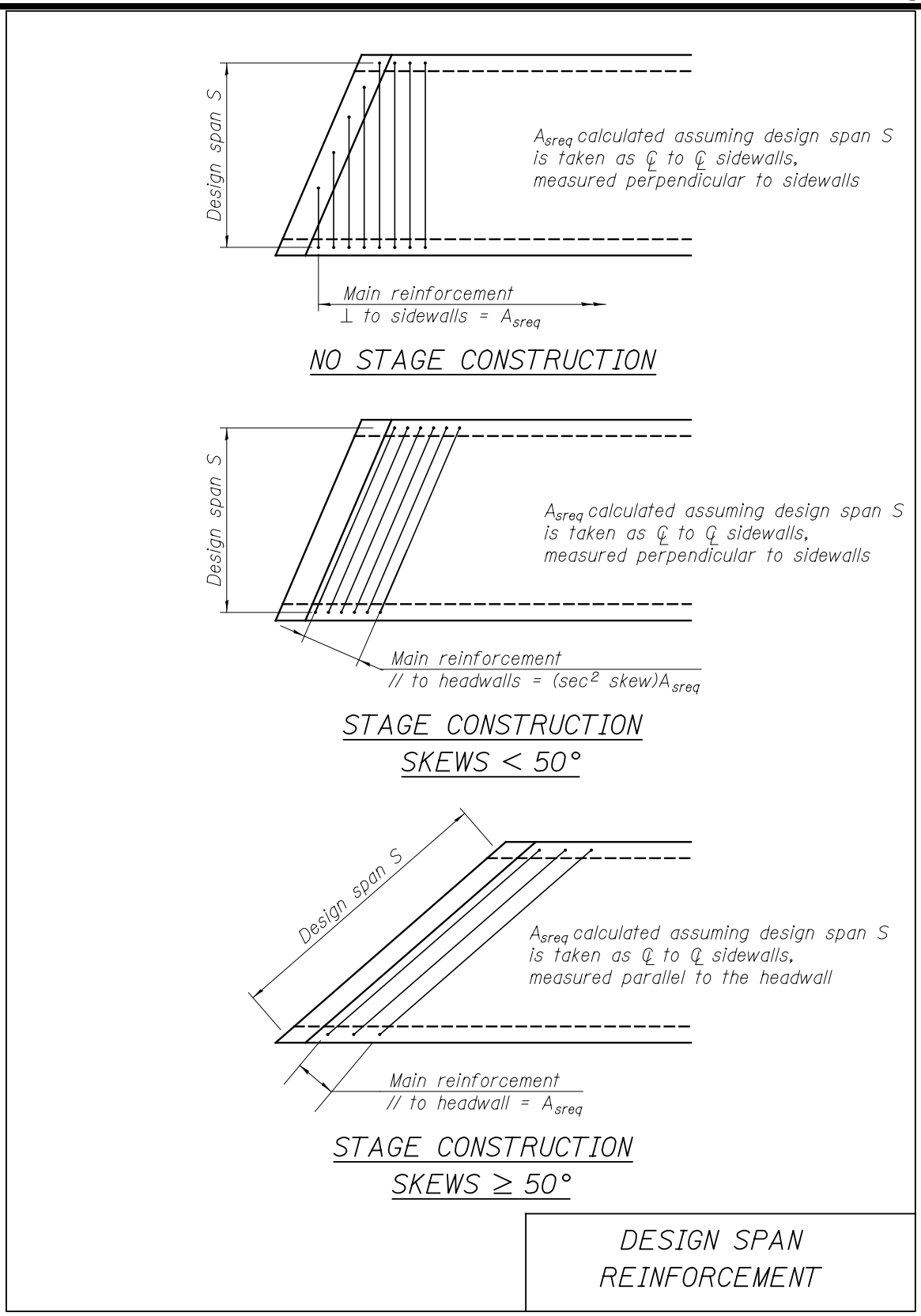
Design span S
A_{sreq} calculated assuming design span S is taken as ℄ to ℄ sidewalls, measured perpendicular to sidewalls
Main reinforcement ⊥ to sidewalls = A_{sreq}
NO STAGE CONSTRUCTION
Design span S
A_{sreq} calculated assuming design span S is taken as ℄ to ℄ sidewalls, measured perpendicular to sidewalls
Main reinforcement // to headwalls = ($\sec^2$ skew)A_{sreq}
STAGE CONSTRUCTION
SKEWS < 50°
Design span S
A_{sreq} calculated assuming design span S is taken as ℄ to ℄ sidewalls, measured parallel to the headwall
Main reinforcement // to headwall = A_{sreq}
STAGE CONSTRUCTION
SKEWS ≥ 50°
DESIGN SPAN REINFORCEMENT

Figure 3.5.2-1

3.5.3 Geometric Requirements

For concrete placement purposes, the minimum allowable thickness of a wall or slab with one mat of reinforcement shall be six (6) inches. The minimum allowable thickness of a wall with two mats of reinforcement shall be ten (10) inches.

The minimum thickness of a slab in inches shall be equal to the clear span in feet. The minimum thickness of a wall in inches shall be equal to the clear height in feet.

The thickness of the bottom slab shall be one inch greater than the thickness of the top slab for cast-in-place culverts.

3.5.4 Flexural Resistance

To satisfy ultimate strength requirements, flexural resistance shall be calculated in accordance with Article 5.7.3.2 of the *AASHTO LRFD Bridge Design Specifications.*

The resistance factor for combined flexure and axial load shall be in accordance with Article 5.5.4.2 and Equation 5.5.4.2.1-2 of the *AASHTO LRFD Bridge Design Specifications.* The provisions of Article 12.5.5 shall not be used.

To simplify calculations, axial loads may be conservatively ignored. However, it may be advantageous to consider axial load effects.

3.5.5 Control of Cracking by Distribution of Reinforcement

To satisfy serviceablility requirements, reinforcement spacing shall satisfy the crack control requirements of Article 5.7.3.4 of the *AASHTO LRFD Bridge Design Specifications.*

The reinforcement bar stress at the Service I limit state shall be limited to 36 ksi.

The exposure factor, γ_E, shall be taken as 0.75 for all concrete box culverts.

While not recommended due to the additional complexity, the provisions of C12.11.3 of the *AASHTO LRFD Bridge Design Specifications* may be used to account for the influence of axial load on the service stress. For determining stresses in the sidewall, the axial load, N_s, shall be calculated assuming the embankment factor, F_e, is equal to 1.0. For determining stresses in the top or bottom slab, N_s shall be calculated assuming the equivalent horizontal earth pressure (EH) is one-half of the design pressure and the contribution from live load surcharge (LS) is zero.

3.5.6 Limitation on Maximum Reinforcement

All reinforced concrete shall be either tension controlled or in the transition zone as noted in Article 5.5.4.2 and Figure C.5.5.4.2.1-1 of the *AASHTO LRFD Bridge Design Specifications.*
For routine designs, maximum reinforcement in box culvert top slabs and sidewalls should be limited to $0.375\rho_{bal}$ where ρ_{bal} is calculated using the following equation:

$$\rho_{bal} = \frac{0.85\beta_1 f'_c}{f_y}\left(\frac{87000}{87000 + f_y}\right)$$

For non-routine design, such as the case where minimizing top slab thickness is required to provide minimum cover over the culvert in low-fill situations, ρ may be increased to $0.6\rho_{bal}$. This will provide that the flexural capacity at the balance point is greater than the flexural capacity at zero axial load.

The past practice of proportioning slabs for minimum thickness is discouraged. A marginal increase in slab thickness can result in a significant reduction in the amount of reinforcement and reduce the overall cost of the culvert.

3.5.7 Limitation on Minimum Reinforcement

All culvert slabs and sidewalls shall be reinforced to develop a minimum factored resistance equal to the lesser of 1.33 times the factored moment required by the applicable strength load combination specified in Table 3.4.1-1, or the cracking moment M_{cr} , as determined by Eq. 5.7.3.3.2-1 of the *AASHTO LRFD Bridge Design Specifications*.

3.5.8 Maximum Reinforcement Spacing

Reinforcement spacing shall be in accordance with Article 5.7.3.4 of the *AASHTO LRFD Bridge Design Specifications,* except the maximum spacing for primary flexural reinforcement shall be limited to 12 inches. For determination of crack control requirements, the exposure condition shall be assumed to be Class 2, with $\gamma_E = 0.75$.

The requirements of Article 5.10.3.2 of the *AASHTO LRFD Bridge Design Specifications* shall be satisfied.

3.5.9 Minimum Reinforcement Spacing

The minimum spacing for primary flexural reinforcement shall be 5 inches. When bar laps are used, the minimum clear distance between the adjacent lapped bars shall not be less than 4 inches.

3.5.10 Bar Size Limitations

The minimum size of reinforcement used in a cast-in-place concrete box culvert shall be 0.5 in. diameter (#4) reinforcement.

The reinforcement bar sizes shown in Table 3.5.10-1 were used in development of the single-span culvert standard design tables. Use of this table will aid in preliminary design.

Slab Thickness (inches)	Max Bar Size
6	5
7 ≤ t< 10	6
10 ≤ t< 12	7
12 ≤ t< 15	8
15 ≤ t< 18	9
t ≤ 18	11*

Table 3.5.10-1

*While #11 bars may be used in thick slabs, the preferred maximum bar size is #9. Slabs thicker than 20” may require two layers of reinforcement to satisfy this preference.

3.5.11 Distribution, Temperature, and Shrinkage Reinforcement

Distribution reinforcement shall be provided for all reinforcement bars required for strength. The amount of reinforcement required shall be calculated using the provisions of Article 5.14.4.1 of the *AASHTO LRFD Bridge Design Specifications*. The maximum spacing of distribution reinforcement shall be 12 inches. The recommended maximum reinforcement size for longitudinal reinforcement is 0.875 in. (#7) reinforcement. Longitudinal reinforcement bars shall not be larger in diameter than the primary flexural reinforcement. Class B laps shall be used for longitudinal reinforcement.

For culverts with fills less than two (2) feet, slabs with thicknesses greater than or equal to eight (8) inches, or walls with thicknesses greater than or equal to ten (10) inches, temperature and shrinkage reinforcement shall be provided for both inside and outside faces of culvert walls. For all other cases, temperature and shrinkage reinforcement is only required to be provided on the exposed face of the wall or slab. The amount of temperature reinforcement required shall be calculated using the provisions of Article 5.10.8 of the *AASHTO LRFD Bridge Design Specifications*.

See Figures 3.5.11-1 and 3.5.11-2 for more details.

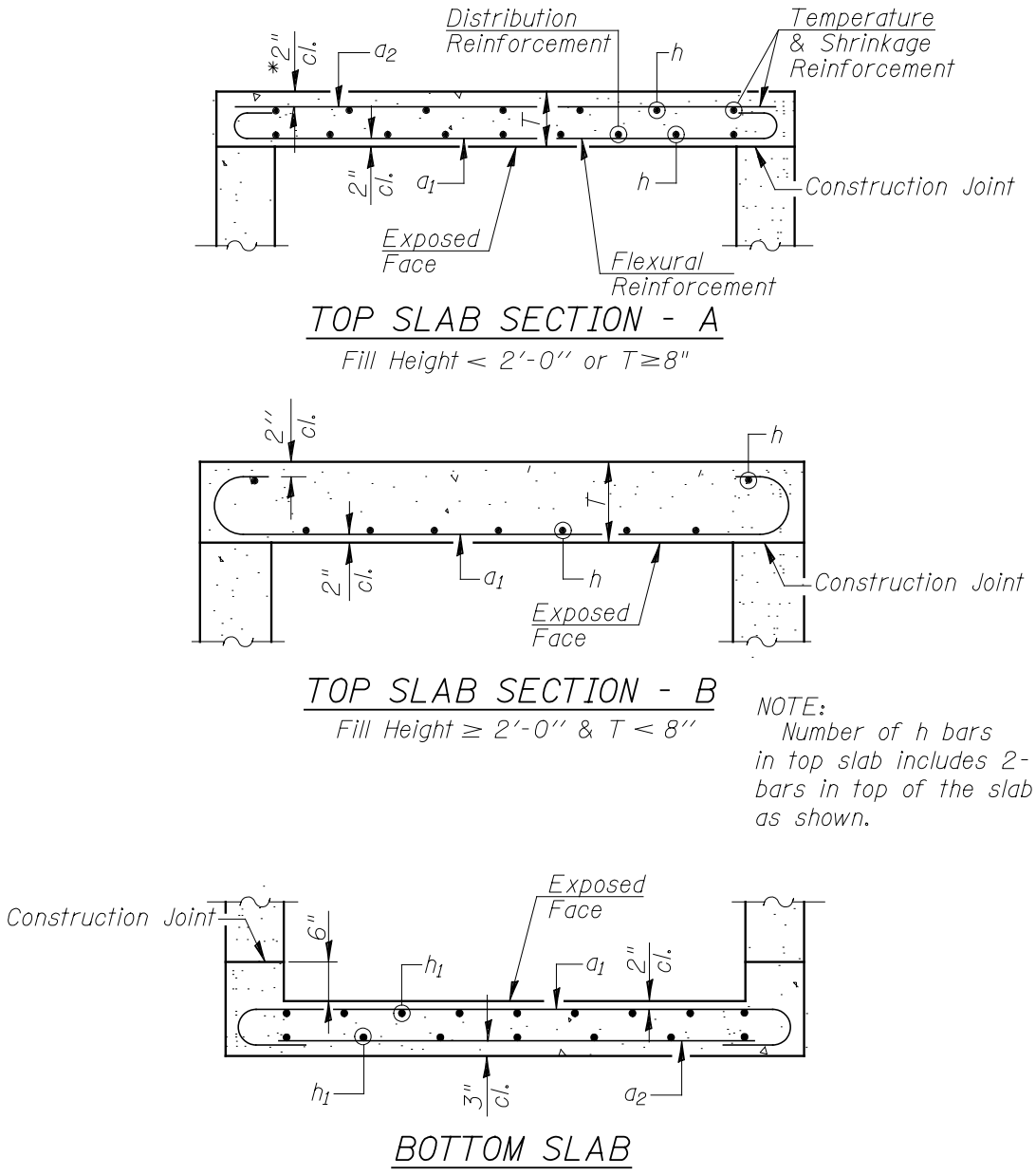

Figure 3.5.11-1

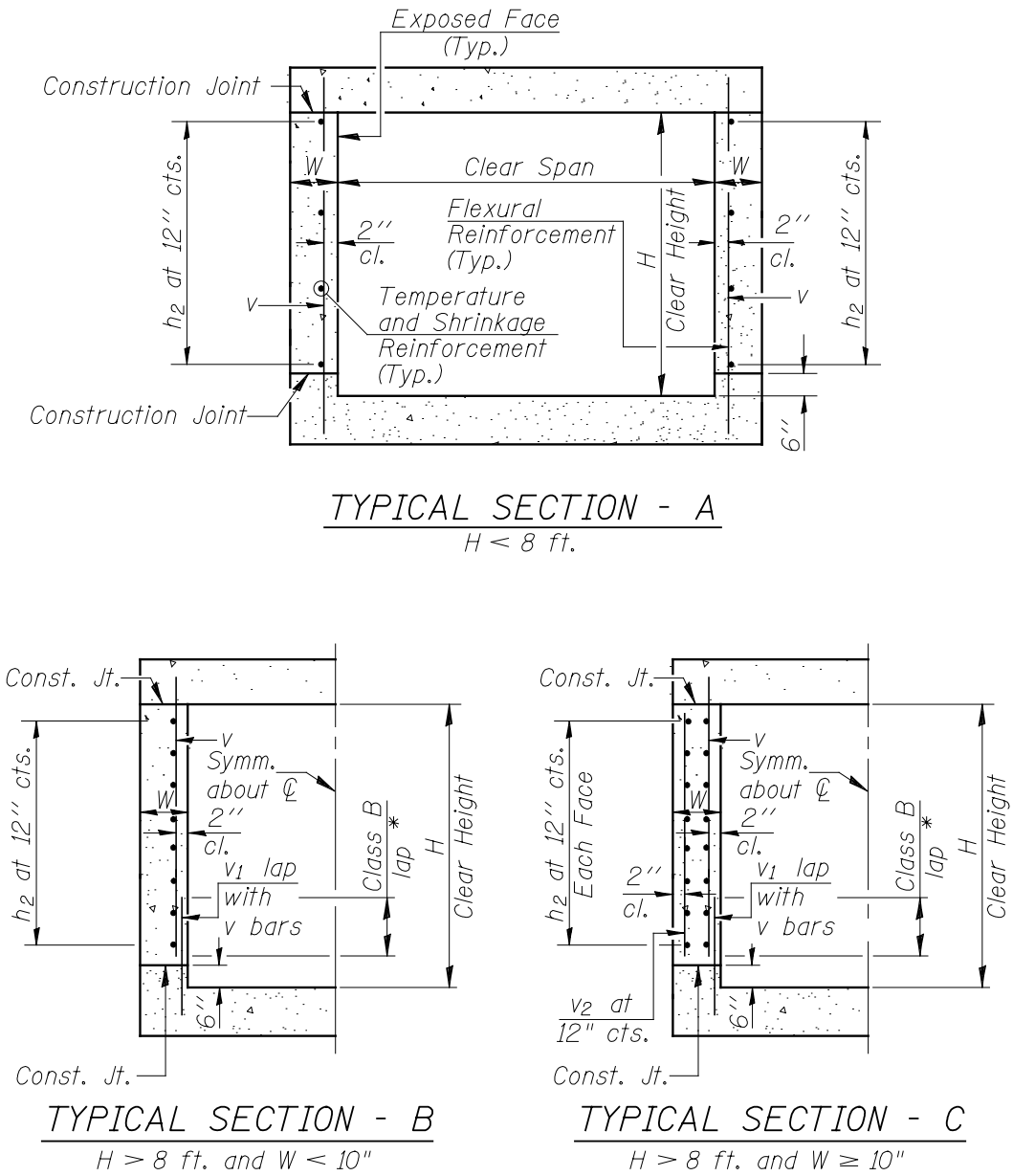

* See Table 5.1-2 for required lap length

SIDEWALL DETAILS

Figure 3.5.11-2

3.5.12 Shear Capacity

The resistance factor for shear shall be in accordance with Article 12.5.5 of the *AASHTO LRFD Bridge Design Specifications.*

For culverts top slabs with fill height of 2 feet or greater, the flexural reinforcement bar size shall preferably be sized and detailed such that the bar is fully developed on both sides of the critical section. If the reinforcement is not fully developed, the area of steel A_s in Eq. 5.14.5.3-1 of the *AASHTO LRFD Bridge Design Specifications* shall be proportionally reduced by an amount equal to the ratio of the actual length provided to the length required for full development. This is consistent with the shear capacity provisions for culvert top slabs with fill height less than 2 feet and for culvert sidewalls.

The shear capacity lower limit provision of Article 5.14.5.3 for simply supported slabs, $0.0791\sqrt{f'_c}\,bd$, shall apply only if the reinforcement is fully developed on both sides of the critical section.

3.6 Standard Design Tables for Single-Box Cast-in-Place Concrete Culverts

Standard design tables for single-box cast-in-place concrete culverts are given below. To utilize these tables, the maximum and minimum fill heights shall be calculated as per Figure 3.4.1-1. Fill heights may be rounded to the nearest foot. The controlling fill height is the height that results in the maximum required concrete volume.

Example:

4' x 3' single-box cast-in-place culvert, 30 degree skew, Stage Construction, 4 ft. max. fill, 1 ft. min. fill

From 4' clear span x 3' clear height table, required concrete volume for 4 ft. max fill is 0.343 cu. yd. / ft. and required concrete volume for 1 ft. min. fill is 0.404 cu. yd. / ft.

Use reinforcement and member thicknesses corresponding to 1 ft. of fill.

From 4' clear span x 3' clear height table, the required a_1 bar size and spacing is #5 bars @ 5 in. cts. To account for 30 degree skew, determine required area of reinforcement from Fig. 5.1-1 and multiply by $\sec^2$ (30 degrees). If possible, keep the same spacing as that shown in the table and maintain the bar size limitations shown in Table 3.5.10-1.

From Fig. 5.1-1, for #5 bars @ 5 in. cts., A_{sreq} = 0.74 in.^{2}
(0.74 in.^{2}) * $\sec^2$ (30 degrees) = 0.99 in.^{2}
From Fig. 5.1-1, for #6 bar @ 5 in. cts., A_s = 1.06 in.^{2} > 0.99 in.^{2} O.K.
From Table 3.5.10-1, the maximum allowable bar size for a 9 in. slab is #6. O.K.

Use #6 bars @ 6 in. cts.

3' CLEAR SPAN BY 2' CLEAR HEIGHT

TOP SLAB			a_1 BAR		a_2, h BAR		h_1 BAR		WALL		v BAR		v_2, h_2 BAR		Conc.
FILL	T	SEC.	SIZE	SPC.	SIZE	SPC.	SIZE	SPC.	W	SEC.	SIZE	SPC.	SIZE	SPC.	Vol.
ft.	in.		#	in.	#	in.	#	in.	in.		#	in.	#	in.	yd.^{3} / ft.
0	8	A	5	6	4	12	4	12	6	A	4	5.5	4	12	0.284
1	8	A	5	5	4	12	4	12	6	A	4	5.5	4	12	0.284
2	8	A	5	6	4	12	4	12	6	A	4	5.5	4	12	0.284
3	6	B	4	5.5	4	12	4	12	6	A	4	5.5	4	12	0.235
4	6	B	4	5.5	4	12	4	12	6	A	4	5.5	4	12	0.235
5	6	B	4	5.5	4	12	4	12	6	A	4	5.5	4	12	0.235
6	6	B	4	5.5	4	12	4	12	6	A	4	5.5	4	12	0.235
7	6	B	4	5.5	4	12	4	12	6	A	4	5.5	4	12	0.235
8	6	B	4	5.5	4	12	4	12	6	A	4	5.5	4	12	0.235
9	6	B	4	5.5	4	12	4	12	6	A	4	5.5	4	12	0.235
10	6	B	4	5.5	4	12	4	12	6	A	4	5.5	4	12	0.235
11	6	B	4	5.5	4	12	4	12	6	A	4	5.5	4	12	0.235
12	6	B	4	5.5	4	12	4	12	6	A	4	5.5	4	12	0.235
13	6	B	4	5.5	4	12	4	12	6	A	4	5.5	4	12	0.235
14	6	B	4	5.5	4	12	4	12	6	A	4	5.5	4	12	0.235
15	6	B	4	5.5	4	12	4	12	6	A	4	5.5	4	12	0.235
20	7	B	5	7	4	12	4	12	6	A	4	5.5	4	12	0.259
25	7	B	5	7	4	12	4	12	6	A	4	5.5	4	12	0.259

3' CLEAR SPAN BY 3' CLEAR HEIGHT

TOP SLAB			a_1 BAR		a_2, h BAR		h_1 BAR		WALL		v BAR		v_2, h_2 BAR		Conc.
FILL	T	SEC.	SIZE	SPC.	SIZE	SPC.	SIZE	SPC.	W	SEC.	SIZE	SPC.	SIZE	SPC.	Vol.
ft.	in.		#	in.	#	in.	#	in.	in.		#	in.	#	in.	yd.^{3} / ft.
0	8	A	5	6	4	12	4	12	6	A	4	5.5	4	12	0.321
1	8	A	5	5	4	12	4	12	6	A	4	5.5	4	12	0.321
2	8	A	5	6	4	12	4	12	6	A	4	5.5	4	12	0.321
3	6	B	4	5.5	4	12	4	12	6	A	4	5.5	4	12	0.272
4	6	B	4	5.5	4	12	4	12	6	A	4	5.5	4	12	0.272
5	6	B	4	5.5	4	12	4	12	6	A	4	5.5	4	12	0.272
6	6	B	4	5.5	4	12	4	12	6	A	4	5.5	4	12	0.272
7	6	B	4	5.5	4	12	4	12	6	A	4	5.5	4	12	0.272
8	6	B	4	5.5	4	12	4	12	6	A	4	5.5	4	12	0.272
9	6	B	4	5.5	4	12	4	12	6	A	4	5.5	4	12	0.272
10	6	B	4	5.5	4	12	4	12	6	A	4	5.5	4	12	0.272
11	6	B	4	5.5	4	12	4	12	6	A	4	5.5	4	12	0.272
12	6	B	4	5.5	4	12	4	12	6	A	4	5.5	4	12	0.272
13	6	B	4	5.5	4	12	4	12	6	A	4	5.5	4	12	0.272
14	6	B	4	5.5	4	12	4	12	6	A	4	5.5	4	12	0.272
15	6	B	4	5.5	4	12	4	12	6	A	4	5.5	4	12	0.272
20	7	B	5	7	4	12	4	12	6	A	4	5.5	4	12	0.296
25	7	B	5	7	4	12	4	12	6	A	4	5.5	4	12	0.296

4' CLEAR SPAN BY 2' CLEAR HEIGHT

TOP SLAB			a_1 BAR		a_2, h BAR		h_1 BAR		WALL		v BAR		v_2, h_2 BAR		Conc.
FILL	T	SEC.	SIZE	SPC.	SIZE	SPC.	SIZE	SPC.	W	SEC.	SIZE	SPC.	SIZE	SPC.	Vol.
ft.	in.		#	in.	#	in.	#	in.	in.		#	in.	#	in.	yd.^{3} / ft.
0	8.5	A	5	5	4	12	4	12	6	A	4	5.5	4	12	0.352
1	9	A	5	5	4	12	4	12	6	A	4	5.5	4	12	0.367
2	9	A	6	6	5	12	5	12	6	A	4	5.5	4	12	0.367
3	7	B	5	7	4	12	4	12	6	A	4	5.5	4	12	0.306
4	7	B	5	7	4	12	4	12	6	A	4	5.5	4	12	0.306
5	7	B	5	7	4	12	4	12	6	A	4	5.5	4	12	0.306
6	7	B	5	7	4	12	4	12	6	A	4	5.5	4	12	0.306
7	7	B	5	7	4	12	4	12	6	A	4	5.5	4	12	0.306
8	7	B	5	7	4	12	4	12	6	A	4	5.5	4	12	0.306
9	7	B	5	7	4	12	4	12	6	A	4	5.5	4	12	0.306
10	7	B	5	7	4	12	4	12	6	A	4	5.5	4	12	0.306
11	7	B	5	7	4	12	4	12	6	A	4	5.5	4	12	0.306
12	7	B	5	7	4	12	4	12	6	A	4	5.5	4	12	0.306
13	7	B	5	7	4	12	4	12	6	A	4	5.5	4	12	0.306
14	7.5	B	5	6	4	12	4	12	6	A	4	5.5	4	12	0.321
15	7.5	B	5	6	4	12	4	12	6	A	4	5.5	4	12	0.321
20	7.5	B	5	6	4	12	4	12	6	A	4	5.5	4	12	0.321
25	8.5	A	6	7.5	5	12	5	12	6	A	4	5.5	4	12	0.352

4' CLEAR SPAN BY 3' CLEAR HEIGHT

TOP SLAB			a_1 BAR		a_2, h BAR		h_1 BAR		WALL		v BAR		v_2, h_2 BAR		Conc.
FILL	T	SEC.	SIZE	SPC.	SIZE	SPC.	SIZE	SPC.	W	SEC.	SIZE	SPC.	SIZE	SPC.	Vol.
ft.	in.		#	in.	#	in.	#	in.	in.		#	in.	#	in.	yd.^{3} / ft.
0	8.5	A	5	5	4	12	4	12	6	A	4	5.5	4	12	0.389
1	9	A	5	5	4	12	4	12	6	A	4	5.5	4	12	0.404
2	9	A	6	6	5	12	5	12	6	A	4	5.5	4	12	0.404
3	7	B	5	7	4	12	4	12	6	A	4	5.5	4	12	0.343
4	7	B	5	7	4	12	4	12	6	A	4	5.5	4	12	0.343
5	7	B	5	7	4	12	4	12	6	A	4	5.5	4	12	0.343
6	7	B	5	7	4	12	4	12	6	A	4	5.5	4	12	0.343
7	7	B	5	7	4	12	4	12	6	A	4	5.5	4	12	0.343
8	7	B	5	7	4	12	4	12	6	A	4	5.5	4	12	0.343
9	7	B	5	7	4	12	4	12	6	A	4	5.5	4	12	0.343
10	7	B	5	7	4	12	4	12	6	A	4	5.5	4	12	0.343
11	7	B	5	7	4	12	4	12	6	A	4	5.5	4	12	0.343
12	7	B	5	7	4	12	4	12	6	A	4	5.5	4	12	0.343
13	7	B	5	7	4	12	4	12	6	A	4	5.5	4	12	0.343
14	7.5	B	5	6	4	12	4	12	6	A	4	5.5	4	12	0.358
15	7.5	B	5	6	4	12	4	12	6	A	4	5.5	4	12	0.358
20	7.5	B	5	6	4	12	4	12	6	A	4	5.5	4	12	0.358
25	8.5	A	6	7.5	5	12	5	12	6	A	4	5.5	4	12	0.389

4' CLEAR SPAN BY 4' CLEAR HEIGHT

TOP SLAB			a_1 BAR		a_2, h BAR		h_1 BAR		WALL		v BAR		v_2, h_2 BAR		Conc.
FILL	T	SEC.	SIZE	SPC.	SIZE	SPC.	SIZE	SPC.	W	SEC.	SIZE	SPC.	SIZE	SPC.	Vol.
ft.	in.		#	in.	#	in.	#	in.	in.		#	in.	#	in.	yd.^{3} / ft.
0	8.5	A	5	5	4	12	4	12	6	A	4	5.5	4	12	0.426
1	9	A	5	5	4	12	4	12	6	A	4	5.5	4	12	0.441
2	9	A	6	6	5	12	5	12	6	A	4	5.5	4	12	0.441
3	7	B	5	7	4	12	4	12	6	A	4	5.5	4	12	0.38
4	7	B	5	7	4	12	4	12	6	A	4	5.5	4	12	0.38
5	7	B	5	7	4	12	4	12	6	A	4	5.5	4	12	0.38
6	7	B	5	7	4	12	4	12	6	A	4	5.5	4	12	0.38
7	7	B	5	7	4	12	4	12	6	A	4	5.5	4	12	0.38
8	7	B	5	7	4	12	4	12	6	A	4	5.5	4	12	0.38
9	7	B	5	7	4	12	4	12	6	A	4	5.5	4	12	0.38
10	7	B	5	7	4	12	4	12	6	A	4	5.5	4	12	0.38
11	7	B	5	7	4	12	4	12	6	A	4	5.5	4	12	0.38
12	7	B	5	7	4	12	4	12	6	A	4	5.5	4	12	0.38
13	7	B	5	7	4	12	4	12	6	A	4	5.5	4	12	0.38
14	7.5	B	5	6	4	12	4	12	6	A	4	5.5	4	12	0.395
15	7.5	B	5	6	4	12	4	12	6	A	4	5.5	4	12	0.395
20	7.5	B	5	6	4	12	4	12	6	A	5	7	4	12	0.395
25	8.5	A	6	7.5	5	12	5	12	7	A	5	7.5	4	12	0.46

5' CLEAR SPAN BY 2' CLEAR HEIGHT

TOP SLAB			a_1 BAR		a_2, h BAR		h_1 BAR		WALL		v BAR		v_2, h_2 BAR		Conc.
FILL	T	SEC.	SIZE	SPC.	SIZE	SPC.	SIZE	SPC.	W	SEC.	SIZE	SPC.	SIZE	SPC.	Vol.
ft.	in.		#	in.	#	in.	#	in.	in.		#	in.	#	in.	yd.^{3} / ft.
0	9.5	A	6	7	5	12	5	12	6	A	4	5.5	4	12	0.444
1	9	A	6	7	5	12	5	12	6	A	4	5.5	4	12	0.426
2	9.5	A	6	5.5	5	12	5	12	6	A	4	5.5	4	12	0.444
3	7.5	B	5	6	4	12	4	12	6	A	4	5.5	4	12	0.37
4	7.5	B	5	6	4	12	4	12	6	A	4	5.5	4	12	0.37
5	7.5	B	5	6	4	12	4	12	6	A	4	5.5	4	12	0.37
6	7.5	B	5	6	4	12	4	12	6	A	4	5.5	4	12	0.37
7	7.5	B	5	6	4	12	4	12	6	A	4	5.5	4	12	0.37
8	7.5	B	5	6	4	12	4	12	6	A	4	5.5	4	12	0.37
9	7.5	B	5	6	4	12	4	12	6	A	4	5.5	4	12	0.37
10	7.5	B	5	6	4	12	4	12	6	A	4	5.5	4	12	0.37
11	8	A	6	7.5	5	12	5	12	6	A	4	5.5	4	12	0.389
12	8	A	6	7.5	5	12	5	12	6	A	4	5.5	4	12	0.389
13	8	A	6	7.5	5	12	5	12	6	A	4	5.5	4	12	0.389
14	8.5	A	6	7.5	5	12	5	12	6	A	4	5.5	4	12	0.407
15	8.5	A	6	7.5	5	12	5	12	6	A	4	5.5	4	12	0.407
20	9.5	A	6	6.5	5	12	5	12	6	A	4	5.5	4	12	0.444
25	10	A	6	6	5	12	5	12	6	A	4	5.5	4	12	0.463

5' CLEAR SPAN BY 3' CLEAR HEIGHT

TOP SLAB			a_1 BAR		a_2, h BAR		h_1 BAR		WALL		v BAR		v_2, h_2 BAR		Conc.
FILL	T	SEC.	SIZE	SPC.	SIZE	SPC.	SIZE	SPC.	W	SEC.	SIZE	SPC.	SIZE	SPC.	Vol.
ft.	in.		#	in.	#	in.	#	in.	in.		#	in.	#	in.	yd.^{3} / ft.
0	9.5	A	6	7	5	12	5	12	6	A	4	5.5	4	12	0.481
1	9	A	6	7	5	12	5	12	6	A	4	5.5	4	12	0.463
2	9.5	A	6	5.5	5	12	5	12	6	A	4	5.5	4	12	0.481
3	7.5	B	5	6	4	12	4	12	6	A	4	5.5	4	12	0.407
4	7.5	B	5	6	4	12	4	12	6	A	4	5.5	4	12	0.407
5	7.5	B	5	6	4	12	4	12	6	A	4	5.5	4	12	0.407
6	7.5	B	5	6	4	12	4	12	6	A	4	5.5	4	12	0.407
7	7.5	B	5	6	4	12	4	12	6	A	4	5.5	4	12	0.407
8	7.5	B	5	6	4	12	4	12	6	A	4	5.5	4	12	0.407
9	7.5	B	5	6	4	12	4	12	6	A	4	5.5	4	12	0.407
10	7.5	B	5	6	4	12	4	12	6	A	4	5.5	4	12	0.407
11	8	A	6	7.5	5	12	5	12	6	A	4	5.5	4	12	0.426
12	8	A	6	7.5	5	12	5	12	6	A	4	5.5	4	12	0.426
13	8	A	6	7.5	5	12	5	12	6	A	4	5.5	4	12	0.426
14	8.5	A	6	7.5	5	12	5	12	6	A	4	5.5	4	12	0.444
15	8.5	A	6	7.5	5	12	5	12	6	A	4	5.5	4	12	0.444
20	9.5	A	6	6.5	5	12	5	12	6	A	4	5.5	4	12	0.481
25	10	A	6	6	5	12	5	12	6	A	4	5.5	4	12	0.5

5' CLEAR SPAN BY 4' CLEAR HEIGHT

TOP SLAB			a_1 BAR		a_2, h BAR		h_1 BAR		WALL		v BAR		v_2, h_2 BAR		Conc.
FILL	T	SEC.	SIZE	SPC.	SIZE	SPC.	SIZE	SPC.	W	SEC.	SIZE	SPC.	SIZE	SPC.	Vol.
ft.	in.		#	in.	#	in.	#	in.	in.		#	in.	#	in.	yd.^{3} / ft.
0	9.5	A	6	7	5	12	5	12	6	A	4	5.5	4	12	0.519
1	9	A	6	7	5	12	5	12	6	A	4	5.5	4	12	0.5
2	9.5	A	6	5.5	5	12	5	12	6	A	4	5.5	4	12	0.519
3	7.5	B	5	6	4	12	4	12	6	A	4	5.5	4	12	0.444
4	7.5	B	5	6	4	12	4	12	6	A	4	5.5	4	12	0.444
5	7.5	B	5	6	4	12	4	12	6	A	4	5.5	4	12	0.444
6	7.5	B	5	6	4	12	4	12	6	A	4	5.5	4	12	0.444
7	7.5	B	5	6	4	12	4	12	6	A	4	5.5	4	12	0.444
8	7.5	B	5	6	4	12	4	12	6	A	4	5.5	4	12	0.444
9	7.5	B	5	6	4	12	4	12	6	A	4	5.5	4	12	0.444
10	7.5	B	5	6	4	12	4	12	6	A	4	5.5	4	12	0.444
11	8	A	6	7.5	5	12	5	12	6	A	4	5.5	4	12	0.463
12	8	A	6	7.5	5	12	5	12	6	A	4	5.5	4	12	0.463
13	8	A	6	7.5	5	12	5	12	6	A	4	5.5	4	12	0.463
14	8.5	A	6	7.5	5	12	5	12	6	A	4	5.5	4	12	0.481
15	8.5	A	6	7.5	5	12	5	12	6	A	4	5.5	4	12	0.481
20	9.5	A	6	6.5	5	12	5	12	6	A	5	7	4	12	0.519
25	10	A	6	6	5	12	5	12	7	A	5	7.5	4	12	0.573

5' CLEAR SPAN BY 5' CLEAR HEIGHT

TOP SLAB			a_1 BAR		a_2, h BAR		h_1 BAR		WALL		v BAR		v_2, h_2 BAR		Conc.
FILL	T	SEC.	SIZE	SPC.	SIZE	SPC.	SIZE	SPC.	W	SEC.	SIZE	SPC.	SIZE	SPC.	Vol.
ft.	in.		#	in.	#	in.	#	in.	in.		#	in.	#	in.	yd.^{3} / ft.
0	9.5	A	6	7	5	12	5	12	6	A	4	5.5	4	12	0.556
1	9	A	6	7	5	12	5	12	6	A	4	5.5	4	12	0.537
2	9.5	A	6	5.5	5	12	5	12	6	A	4	5.5	4	12	0.556
3	7.5	B	5	6	4	12	4	12	6	A	4	5.5	4	12	0.481
4	7.5	B	5	6	4	12	4	12	6	A	4	5.5	4	12	0.481
5	7.5	B	5	6	4	12	4	12	6	A	4	5.5	4	12	0.481
6	7.5	B	5	6	4	12	4	12	6	A	4	5.5	4	12	0.481
7	7.5	B	5	6	4	12	4	12	6	A	4	5.5	4	12	0.481
8	7.5	B	5	6	4	12	4	12	6	A	5	7.5	4	12	0.481
9	7.5	B	5	6	4	12	4	12	6	A	5	7.5	4	12	0.481
10	7.5	B	5	6	4	12	4	12	6	A	5	7	4	12	0.481
11	8	A	6	7.5	5	12	5	12	6	A	5	7	4	12	0.5
12	8	A	6	7.5	5	12	5	12	6	A	5	7	4	12	0.5
13	8	A	6	7.5	5	12	5	12	7	A	5	7	4	12	0.52
14	8.5	A	6	7.5	5	12	5	12	7	A	5	7	4	12	0.539
15	8.5	A	6	7.5	5	12	5	12	7	A	5	7	4	12	0.559
20	9.5	A	6	6.5	5	12	5	12	7	A	5	6	4	12	0.597
25	10	A	6	6	5	12	5	12	8	A	5	6	4	12	0.657

6' CLEAR SPAN BY 2' CLEAR HEIGHT

TOP SLAB			a_1 BAR		a_2, h BAR		h_1 BAR		WALL		v BAR		v_2, h_2 BAR		Conc.
FILL	T	SEC.	SIZE	SPC.	SIZE	SPC.	SIZE	SPC.	W	SEC.	SIZE	SPC.	SIZE	SPC.	Vol.
ft.	in.		#	in.	#	in.	#	in.	in.		#	in.	#	in.	yd.^{3} / ft.
0	9.5	A	6	7	5	12	5	12	6	A	4	5.5	4	12	0.506
1	9.5	A	6	7	5	12	5	12	6	A	4	5.5	4	12	0.506
2	10	A	6	5.5	5	12	5	12	6	A	4	5.5	4	12	0.528
3	8.5	A	6	7.5	5	12	5	12	6	A	4	5.5	4	12	0.463
4	8.5	A	6	7.5	5	12	5	12	6	A	4	5.5	4	12	0.463
5	8.5	A	6	7.5	5	12	5	12	6	A	4	5.5	4	12	0.463
6	8.5	A	6	7.5	5	12	5	12	6	A	4	5.5	4	12	0.463
7	8.5	A	6	7.5	5	12	5	12	6	A	4	5.5	4	12	0.463
8	8.5	A	6	7.5	5	12	5	12	6	A	4	5.5	4	12	0.463
9	8.5	A	6	7	5	12	5	12	6	A	4	5.5	4	12	0.463
10	8.5	A	6	7	5	12	5	12	6	A	4	5.5	4	12	0.463
11	8.5	A	6	7	5	12	5	12	6	A	4	5.5	4	12	0.463
12	8.5	A	6	7	5	12	5	12	6	A	4	5.5	4	12	0.463
13	8.5	A	6	7	5	12	5	12	6	A	4	5.5	4	12	0.463
14	9.5	A	6	6.5	5	12	5	12	6	A	4	5.5	4	12	0.506
15	9.5	A	6	6.5	5	12	5	12	6	A	4	5.5	4	12	0.506
20	10	A	6	6	5	12	5	12	6	A	4	5.5	4	12	0.528
25	11	A	7	7	6	12	6	12	6	A	4	5.5	4	12	0.571

6' CLEAR SPAN BY 3' CLEAR HEIGHT

TOP SLAB			a_1 BAR		a_2, h BAR		h_1 BAR		WALL		v BAR		v_2, h_2 BAR		Conc.
FILL	T	SEC.	SIZE	SPC.	SIZE	SPC.	SIZE	SPC.	W	SEC.	SIZE	SPC.	SIZE	SPC.	Vol.
ft.	in.		#	in.	#	in.	#	in.	in.		#	in.	#	in.	yd.^{3} / ft.
0	9.5	A	6	7	5	12	5	12	6	A	4	5.5	4	12	0.543
1	9.5	A	6	7	5	12	5	12	6	A	4	5.5	4	12	0.543
2	10	A	6	5.5	5	12	5	12	6	A	4	5.5	4	12	0.565
3	8.5	A	6	7.5	5	12	5	12	6	A	4	5.5	4	12	0.5
4	8.5	A	6	7.5	5	12	5	12	6	A	4	5.5	4	12	0.5
5	8.5	A	6	7.5	5	12	5	12	6	A	4	5.5	4	12	0.5
6	8.5	A	6	7.5	5	12	5	12	6	A	4	5.5	4	12	0.5
7	8.5	A	6	7.5	5	12	5	12	6	A	4	5.5	4	12	0.5
8	8.5	A	6	7.5	5	12	5	12	6	A	4	5.5	4	12	0.5
9	8.5	A	6	7	5	12	5	12	6	A	4	5.5	4	12	0.5
10	8.5	A	6	7	5	12	5	12	6	A	4	5.5	4	12	0.5
11	8.5	A	6	7	5	12	5	12	6	A	4	5.5	4	12	0.5
12	8.5	A	6	7	5	12	5	12	6	A	4	5.5	4	12	0.5
13	8.5	A	6	7	5	12	5	12	6	A	4	5.5	4	12	0.5
14	9.5	A	6	6.5	5	12	5	12	6	A	4	5.5	4	12	0.543
15	9.5	A	6	6.5	5	12	5	12	6	A	4	5.5	4	12	0.543
20	10	A	6	6	5	12	5	12	6	A	4	5.5	4	12	0.565
25	11	A	7	7	6	12	6	12	6	A	4	5.5	4	12	0.608

6' CLEAR SPAN BY 4' CLEAR HEIGHT

TOP SLAB			a_1 BAR		a_2, h BAR		h_1 BAR		WALL		v BAR		v_2, h_2 BAR		Conc.
FILL	T	SEC.	SIZE	SPC.	SIZE	SPC.	SIZE	SPC.	W	SEC.	SIZE	SPC.	SIZE	SPC.	Vol.
ft.	in.		#	in.	#	in.	#	in.	in.		#	in.	#	in.	yd.^{3} / ft.
0	9.5	A	6	7	5	12	5	12	6	A	4	5.5	4	12	0.58
1	9.5	A	6	7	5	12	5	12	6	A	4	5.5	4	12	0.58
2	10	A	6	5.5	5	12	5	12	6	A	4	5.5	4	12	0.602
3	8.5	A	6	7.5	5	12	5	12	6	A	4	5.5	4	12	0.537
4	8.5	A	6	7.5	5	12	5	12	6	A	4	5.5	4	12	0.537
5	8.5	A	6	7.5	5	12	5	12	6	A	4	5.5	4	12	0.537
6	8.5	A	6	7.5	5	12	5	12	6	A	4	5.5	4	12	0.537
7	8.5	A	6	7.5	5	12	5	12	6	A	4	5.5	4	12	0.537
8	8.5	A	6	7.5	5	12	5	12	6	A	4	5.5	4	12	0.537
9	8.5	A	6	7	5	12	5	12	6	A	4	5.5	4	12	0.537
10	8.5	A	6	7	5	12	5	12	6	A	4	5.5	4	12	0.537
11	8.5	A	6	7	5	12	5	12	6	A	4	5.5	4	12	0.537
12	8.5	A	6	7	5	12	5	12	6	A	4	5.5	4	12	0.537
13	8.5	A	6	7	5	12	5	12	6	A	4	5.5	4	12	0.537
14	9.5	A	6	6.5	5	12	5	12	6	A	4	5.5	4	12	0.58
15	9.5	A	6	6.5	5	12	5	12	6	A	4	5.5	4	12	0.58
20	10	A	6	6	5	12	5	12	6	A	5	7	4	12	0.602
25	11	A	7	7	6	12	6	12	7	A	5	7.5	4	12	0.682

6' CLEAR SPAN BY 5' CLEAR HEIGHT

TOP SLAB			a_1 BAR		a_2, h BAR		h_1 BAR		WALL		v BAR		v_2, h_2 BAR		Conc.
FILL	T	SEC.	SIZE	SPC.	SIZE	SPC.	SIZE	SPC.	W	SEC.	SIZE	SPC.	SIZE	SPC.	Vol.
ft.	in.		#	in.	#	in.	#	in.	in.		#	in.	#	in.	yd.^{3} / ft.
0	9.5	A	6	7	5	12	5	12	6	A	4	5.5	4	12	0.617
1	9.5	A	6	7	5	12	5	12	6	A	4	5.5	4	12	0.617
2	10	A	6	5.5	5	12	5	12	6	A	4	5.5	4	12	0.639
3	8.5	A	6	7.5	5	12	5	12	6	A	4	5.5	4	12	0.574
4	8.5	A	6	7.5	5	12	5	12	6	A	4	5.5	4	12	0.574
5	8.5	A	6	7.5	5	12	5	12	6	A	4	5.5	4	12	0.574
6	8.5	A	6	7.5	5	12	5	12	6	A	4	5.5	4	12	0.574
7	8.5	A	6	7.5	5	12	5	12	6	A	4	5.5	4	12	0.574
8	8.5	A	6	7.5	5	12	5	12	6	A	5	7.5	4	12	0.574
9	8.5	A	6	7	5	12	5	12	6	A	5	7.5	4	12	0.574
10	8.5	A	6	7	5	12	5	12	6	A	5	7	4	12	0.574
11	8.5	A	6	7	5	12	5	12	6	A	5	7	4	12	0.574
12	8.5	A	6	7	5	12	5	12	6	A	5	7	4	12	0.574
13	8.5	A	6	7	5	12	5	12	7	A	5	7	4	12	0.594
14	9.5	A	6	6.5	5	12	5	12	7	A	5	7	4	12	0.638
15	9.5	A	6	6.5	5	12	5	12	7	A	5	7	4	12	0.658
20	10	A	6	6	5	12	5	12	7	A	5	6	4	12	0.681
25	11	A	7	7	6	12	6	12	8	A	5	6	4	12	0.767

6' CLEAR SPAN BY 6' CLEAR HEIGHT

TOP SLAB			a_1 BAR		a_2, h BAR		h_1 BAR		WALL		v BAR		v_2, h_2 BAR		Conc.
FILL	T	SEC.	SIZE	SPC.	SIZE	SPC.	SIZE	SPC.	W	SEC.	SIZE	SPC.	SIZE	SPC.	Vol.
ft.	in.		#	in.	#	in.	#	in.	in.		#	in.	#	in.	yd.^{3} / ft.
0	9.5	A	6	7	5	12	5	12	6	A	4	5.5	4	12	0.654
1	9.5	A	6	7	5	12	5	12	6	A	4	5.5	4	12	0.654
2	10	A	6	5.5	5	12	5	12	6	A	4	5.5	4	12	0.676
3	8.5	A	6	7.5	5	12	5	12	7	A	4	5.5	4	12	0.634
4	8.5	A	6	7.5	5	12	5	12	7	A	5	7.5	4	12	0.634
5	8.5	A	6	7.5	5	12	5	12	7	A	5	7	4	12	0.657
6	8.5	A	6	7.5	5	12	5	12	7	A	5	7	4	12	0.657
7	8.5	A	6	7.5	5	12	5	12	7	A	5	7	4	12	0.657
8	8.5	A	6	7.5	5	12	5	12	8	A	5	6	4	12	0.681
9	8.5	A	6	7	5	12	5	12	8	A	5	6	4	12	0.681
10	8.5	A	6	7	5	12	5	12	8	A	5	6	4	12	0.681
11	8.5	A	6	7	5	12	5	12	8	A	5	6	4	12	0.681
12	8.5	A	6	7	5	12	5	12	8	A	5	6	4	12	0.681
13	8.5	A	6	7	5	12	5	12	8	A	5	6	4	12	0.681
14	9.5	A	6	6.5	5	12	5	12	8	A	5	6	4	12	0.725
15	9.5	A	6	6.5	5	12	5	12	8	A	5	6	4	12	0.749
20	10	A	6	6	5	12	5	12	9	A	6	7.5	5	12	0.796
25	11	A	7	7	6	12	6	12	9	A	6	7	5	12	0.866

7' CLEAR SPAN BY 2' CLEAR HEIGHT

TOP SLAB			a_1 BAR		a_2, h BAR		h_1 BAR		WALL		v BAR		v_2, h_2 BAR		Conc.
FILL	T	SEC.	SIZE	SPC.	SIZE	SPC.	SIZE	SPC.	W	SEC.	SIZE	SPC.	SIZE	SPC.	Vol.
ft.	in.		#	in.	#	in.	#	in.	in.		#	in.	#	in.	yd.^{3} / ft.
0	9.5	A	6	6.5	5	12	5	12	6	A	4	5.5	4	12	0.568
1	9.5	A	6	6.5	5	12	5	12	6	A	4	5.5	4	12	0.568
2	9.5	A	6	6.5	5	12	5	12	6	A	4	5.5	4	12	0.568
3	9.5	A	6	6.5	5	12	5	12	6	A	4	5.5	4	12	0.568
4	9	A	6	7	5	12	5	12	6	A	4	5.5	4	12	0.543
5	9	A	6	7	5	12	5	12	6	A	4	5.5	4	12	0.543
6	9	A	6	7	5	12	5	12	6	A	4	5.5	4	12	0.543
7	9	A	6	7	5	12	5	12	6	A	4	5.5	4	12	0.543
8	9.5	A	6	6.5	5	12	5	12	6	A	4	5.5	4	12	0.568
9	9.5	A	6	6.5	5	12	5	12	6	A	4	5.5	4	12	0.568
10	10	A	6	6	5	12	5	12	6	A	4	5.5	4	12	0.593
11	10	A	6	6	5	12	5	12	6	A	4	5.5	4	12	0.593
12	10	A	6	6	5	12	5	12	6	A	4	5.5	4	12	0.593
13	10	A	6	6	5	12	5	12	6	A	4	5.5	4	12	0.593
14	10	A	6	6	5	12	5	12	6	A	4	5.5	4	12	0.593
15	10	A	6	6	5	12	5	12	6	A	4	5.5	4	12	0.593
20	12	A	7	7	6	12	6	12	6	A	4	5.5	4	12	0.667
25	13	A	7	6	6	12	6	12	6	A	4	5.5	4	12	0.716

7' CLEAR SPAN BY 3' CLEAR HEIGHT

TOP SLAB			a_1 BAR		a_2, h BAR		h_1 BAR		WALL		v BAR		v_2, h_2 BAR		Conc.
FILL	T	SEC.	SIZE	SPC.	SIZE	SPC.	SIZE	SPC.	W	SEC.	SIZE	SPC.	SIZE	SPC.	Vol.
ft.	in.		#	in.	#	in.	#	in.	in.		#	in.	#	in.	yd.^{3} / ft.
0	9.5	A	6	6.5	5	12	5	12	6	A	4	5.5	4	12	0.605
1	9.5	A	6	6.5	5	12	5	12	6	A	4	5.5	4	12	0.605
2	9.5	A	6	6.5	5	12	5	12	6	A	4	5.5	4	12	0.605
3	9.5	A	6	6.5	5	12	5	12	6	A	4	5.5	4	12	0.605
4	9	A	6	7	5	12	5	12	6	A	4	5.5	4	12	0.58
5	9	A	6	7	5	12	5	12	6	A	4	5.5	4	12	0.58
6	9	A	6	7	5	12	5	12	6	A	4	5.5	4	12	0.58
7	9	A	6	7	5	12	5	12	6	A	4	5.5	4	12	0.58
8	9.5	A	6	6.5	5	12	5	12	6	A	4	5.5	4	12	0.605
9	9.5	A	6	6.5	5	12	5	12	6	A	4	5.5	4	12	0.605
10	10	A	6	6	5	12	5	12	6	A	4	5.5	4	12	0.63
11	10	A	6	6	5	12	5	12	6	A	4	5.5	4	12	0.63
12	10	A	6	6	5	12	5	12	6	A	4	5.5	4	12	0.63
13	10	A	6	6	5	12	5	12	6	A	4	5.5	4	12	0.63
14	10	A	6	6	5	12	5	12	6	A	4	5.5	4	12	0.63
15	10	A	6	6	5	12	5	12	6	A	4	5.5	4	12	0.63
20	12	A	7	7	6	12	6	12	6	A	4	5.5	4	12	0.704
25	13	A	7	6	6	12	6	12	6	A	4	5.5	4	12	0.753

7' CLEAR SPAN BY 4' CLEAR HEIGHT

TOP SLAB			a_1 BAR		a_2, h BAR		h_1 BAR		WALL		v BAR		v_2, h_2 BAR		Conc.
FILL	T	SEC.	SIZE	SPC.	SIZE	SPC.	SIZE	SPC.	W	SEC.	SIZE	SPC.	SIZE	SPC.	Vol.
ft.	in.		#	in.	#	in.	#	in.	in.		#	in.	#	in.	yd.^{3} / ft.
0	9.5	A	6	6.5	5	12	5	12	6	A	4	5.5	4	12	0.642
1	9.5	A	6	6.5	5	12	5	12	6	A	4	5.5	4	12	0.642
2	9.5	A	6	6.5	5	12	5	12	6	A	4	5.5	4	12	0.642
3	9.5	A	6	6.5	5	12	5	12	6	A	4	5.5	4	12	0.642
4	9	A	6	7	5	12	5	12	6	A	4	5.5	4	12	0.617
5	9	A	6	7	5	12	5	12	6	A	4	5.5	4	12	0.617
6	9	A	6	7	5	12	5	12	6	A	4	5.5	4	12	0.617
7	9	A	6	7	5	12	5	12	6	A	4	5.5	4	12	0.617
8	9.5	A	6	6.5	5	12	5	12	6	A	4	5.5	4	12	0.642
9	9.5	A	6	6.5	5	12	5	12	6	A	4	5.5	4	12	0.642
10	10	A	6	6	5	12	5	12	6	A	4	5.5	4	12	0.667
11	10	A	6	6	5	12	5	12	6	A	4	5.5	4	12	0.667
12	10	A	6	6	5	12	5	12	6	A	4	5.5	4	12	0.667
13	10	A	6	6	5	12	5	12	6	A	4	5.5	4	12	0.667
14	10	A	6	6	5	12	5	12	6	A	4	5.5	4	12	0.667
15	10	A	6	6	5	12	5	12	6	A	4	5.5	4	12	0.667
20	12	A	7	7	6	12	6	12	6	A	5	7	4	12	0.741
25	13	A	7	6	6	12	6	12	7	A	5	7.5	4	12	0.828

7' CLEAR SPAN BY 5' CLEAR HEIGHT

TOP SLAB			a_1 BAR		a_2, h BAR		h_1 BAR		WALL		v BAR		v_2, h_2 BAR		Conc.
FILL	T	SEC.	SIZE	SPC.	SIZE	SPC.	SIZE	SPC.	W	SEC.	SIZE	SPC.	SIZE	SPC.	Vol.
ft.	in.		#	in.	#	in.	#	in.	in.		#	in.	#	in.	yd.^{3} / ft.
0	9.5	A	6	6.5	5	12	5	12	6	A	4	5.5	4	12	0.679
1	9.5	A	6	6.5	5	12	5	12	6	A	4	5.5	4	12	0.679
2	9.5	A	6	6.5	5	12	5	12	6	A	4	5.5	4	12	0.679
3	9.5	A	6	6.5	5	12	5	12	6	A	4	5.5	4	12	0.679
4	9	A	6	7	5	12	5	12	6	A	4	5.5	4	12	0.654
5	9	A	6	7	5	12	5	12	6	A	4	5.5	4	12	0.654
6	9	A	6	7	5	12	5	12	6	A	4	5.5	4	12	0.654
7	9	A	6	7	5	12	5	12	6	A	4	5.5	4	12	0.654
8	9.5	A	6	6.5	5	12	5	12	6	A	5	7.5	4	12	0.679
9	9.5	A	6	6.5	5	12	5	12	6	A	5	7.5	4	12	0.679
10	10	A	6	6	5	12	5	12	6	A	5	7	4	12	0.704
11	10	A	6	6	5	12	5	12	6	A	5	7	4	12	0.704
12	10	A	6	6	5	12	5	12	6	A	5	7	4	12	0.704
13	10	A	6	6	5	12	5	12	7	A	5	7	4	12	0.725
14	10	A	6	6	5	12	5	12	7	A	5	7	4	12	0.725
15	10	A	6	6	5	12	5	12	7	A	5	7	4	12	0.745
20	12	A	7	7	6	12	6	12	7	A	5	6	4	12	0.821
25	13	A	7	6	6	12	6	12	8	A	5	6	4	12	0.916

7' CLEAR SPAN BY 6' CLEAR HEIGHT

TOP SLAB			a_1 BAR		a_2, h BAR		h_1 BAR		WALL		v BAR		v_2, h_2 BAR		Conc.
FILL	T	SEC.	SIZE	SPC.	SIZE	SPC.	SIZE	SPC.	W	SEC.	SIZE	SPC.	SIZE	SPC.	Vol.
ft.	in.		#	in.	#	in.	#	in.	in.		#	in.	#	in.	yd.^{3} / ft.
0	9.5	A	6	6.5	5	12	5	12	6	A	4	5.5	4	12	0.716
1	9.5	A	6	6.5	5	12	5	12	6	A	4	5.5	4	12	0.716
2	9.5	A	6	6.5	5	12	5	12	6	A	4	5.5	4	12	0.716
3	9.5	A	6	6.5	5	12	5	12	7	A	4	5.5	4	12	0.74
4	9	A	6	7	5	12	5	12	7	A	5	7.5	4	12	0.715
5	9	A	6	7	5	12	5	12	7	A	5	7	4	12	0.738
6	9	A	6	7	5	12	5	12	7	A	5	7	4	12	0.738
7	9	A	6	7	5	12	5	12	7	A	5	7	4	12	0.738
8	9.5	A	6	6.5	5	12	5	12	8	A	5	6	4	12	0.787
9	9.5	A	6	6.5	5	12	5	12	8	A	5	6	4	12	0.787
10	10	A	6	6	5	12	5	12	8	A	5	6	4	12	0.813
11	10	A	6	6	5	12	5	12	8	A	5	6	4	12	0.813
12	10	A	6	6	5	12	5	12	8	A	5	6	4	12	0.813
13	10	A	6	6	5	12	5	12	8	A	5	6	4	12	0.813
14	10	A	6	6	5	12	5	12	8	A	5	6	4	12	0.813
15	10	A	6	6	5	12	5	12	8	A	5	6	4	12	0.836
20	12	A	7	7	6	12	6	12	9	A	6	7.5	5	12	0.938
25	13	A	7	6	6	12	6	12	9	A	6	7	5	12	1.015

7' CLEAR SPAN BY 7' CLEAR HEIGHT

TOP SLAB			a_1 BAR		a_2, h BAR		h_1 BAR		WALL		v BAR		v_2, h_2 BAR		Conc.
FILL	T	SEC.	SIZE	SPC.	SIZE	SPC.	SIZE	SPC.	W	SEC.	SIZE	SPC.	SIZE	SPC.	Vol.
ft.	in.		#	in.	#	in.	#	in.	in.		#	in.	#	in.	yd.^{3} / ft.
0	9.5	A	6	6.5	5	12	5	12	7	A	5	7	4	12	0.807
1	9.5	A	6	6.5	5	12	5	12	7	A	5	7	4	12	0.807
2	9.5	A	6	6.5	5	12	5	12	7	A	5	7	4	12	0.807
3	9.5	A	6	6.5	5	12	5	12	7	A	5	7	4	12	0.807
4	9	A	6	7	5	12	5	12	8	A	5	6	4	12	0.808
5	9	A	6	7	5	12	5	12	8	A	5	6	4	12	0.808
6	9	A	6	7	5	12	5	12	8	A	5	6	4	12	0.808
7	9	A	6	7	5	12	5	12	8	A	5	6	4	12	0.808
8	9.5	A	6	6.5	5	12	5	12	8	A	6	7.5	5	12	0.86
9	9.5	A	6	6.5	5	12	5	12	8	A	6	7.5	5	12	0.86
10	10	A	6	6	5	12	5	12	9	A	6	7.5	5	12	0.913
11	10	A	6	6	5	12	5	12	9	A	6	7.5	5	12	0.913
12	10	A	6	6	5	12	5	12	9	A	6	7	5	12	0.94
13	10	A	6	6	5	12	5	12	9	A	6	7	5	12	0.94
14	10	A	6	6	5	12	5	12	9	A	6	7	5	12	0.94
15	10	A	6	6	5	12	5	12	9	A	6	7	5	12	0.94
20	12	A	7	7	6	12	6	12	10	A	6	6.5	5	12	1.046
25	13	A	7	6	6	12	6	12	11	A	6	6	5	12	1.156

8' CLEAR SPAN BY 2' CLEAR HEIGHT

TOP SLAB			a_1 BAR		a_2, h BAR		h_1 BAR		WALL		v BAR		v_2, h_2 BAR		Conc.
FILL	T	SEC.	SIZE	SPC.	SIZE	SPC.	SIZE	SPC.	W	SEC.	SIZE	SPC.	SIZE	SPC.	Vol.
ft.	in.		#	in.	#	in.	#	in.	in.		#	in.	#	in.	yd.^{3} / ft.
0	10	A	6	6	5	12	5	12	6	A	4	5.5	4	12	0.657
1	10	A	6	6	5	12	5	12	6	A	4	5.5	4	12	0.657
2	10	A	6	6	5	12	5	12	6	A	4	5.5	4	12	0.657
3	10	A	6	6	5	12	5	12	6	A	4	5.5	4	12	0.657
4	10	A	6	6	5	12	5	12	6	A	4	5.5	4	12	0.657
5	10	A	6	6	5	12	5	12	6	A	4	5.5	4	12	0.657
6	10	A	6	6	5	12	5	12	6	A	4	5.5	4	12	0.657
7	10	A	6	6	5	12	5	12	6	A	4	5.5	4	12	0.657
8	10	A	6	6	5	12	5	12	6	A	4	5.5	4	12	0.657
9	11	A	7	7	6	12	6	12	6	A	4	5.5	4	12	0.685
10	11	A	7	7	6	12	6	12	6	A	4	5.5	4	12	0.685
11	11	A	7	7	6	12	6	12	6	A	4	5.5	4	12	0.713
12	11	A	7	7	6	12	6	12	6	A	4	5.5	4	12	0.713
13	11	A	7	7	6	12	6	12	6	A	4	5.5	4	12	0.713
14	12	A	7	7	6	12	6	12	6	A	4	5.5	4	12	0.741
15	12	A	7	7	6	12	6	12	6	A	4	5.5	4	12	0.741
20	13	A	7	6	6	12	6	12	6	A	4	5.5	4	12	0.796
25	14	A	7	5.5	6	12	6	12	6	A	4	5.5	4	12	0.88

8' CLEAR SPAN BY 3' CLEAR HEIGHT

TOP SLAB			a_1 BAR		a_2, h BAR		h_1 BAR		WALL		v BAR		v_2, h_2 BAR		Conc.
FILL	T	SEC.	SIZE	SPC.	SIZE	SPC.	SIZE	SPC.	W	SEC.	SIZE	SPC.	SIZE	SPC.	Vol.
ft.	in.		#	in.	#	in.	#	in.	in.		#	in.	#	in.	yd.^{3} / ft.
0	10	A	6	6	5	12	5	12	6	A	4	5.5	4	12	0.694
1	10	A	6	6	5	12	5	12	6	A	4	5.5	4	12	0.694
2	10	A	6	6	5	12	5	12	6	A	4	5.5	4	12	0.694
3	10	A	6	6	5	12	5	12	6	A	4	5.5	4	12	0.694
4	10	A	6	6	5	12	5	12	6	A	4	5.5	4	12	0.694
5	10	A	6	6	5	12	5	12	6	A	4	5.5	4	12	0.694
6	10	A	6	6	5	12	5	12	6	A	4	5.5	4	12	0.694
7	10	A	6	6	5	12	5	12	6	A	4	5.5	4	12	0.694
8	10	A	6	6	5	12	5	12	6	A	4	5.5	4	12	0.694
9	11	A	7	7	6	12	6	12	6	A	4	5.5	4	12	0.722
10	11	A	7	7	6	12	6	12	6	A	4	5.5	4	12	0.722
11	11	A	7	7	6	12	6	12	6	A	4	5.5	4	12	0.75
12	11	A	7	7	6	12	6	12	6	A	4	5.5	4	12	0.75
13	11	A	7	7	6	12	6	12	6	A	4	5.5	4	12	0.75
14	12	A	7	7	6	12	6	12	6	A	4	5.5	4	12	0.778
15	12	A	7	7	6	12	6	12	6	A	4	5.5	4	12	0.778
20	13	A	7	6	6	12	6	12	6	A	4	5.5	4	12	0.833
25	14	A	7	5.5	6	12	6	12	6	A	4	5.5	4	12	0.917

8' CLEAR SPAN BY 4' CLEAR HEIGHT

TOP SLAB			a_1 BAR		a_2, h BAR		h_1 BAR		WALL		v BAR		v_2, h_2 BAR		Conc.
FILL	T	SEC.	SIZE	SPC.	SIZE	SPC.	SIZE	SPC.	W	SEC.	SIZE	SPC.	SIZE	SPC.	Vol.
ft.	in.		#	in.	#	in.	#	in.	in.		#	in.	#	in.	yd.^{3} / ft.
0	10	A	6	6	5	12	5	12	6	A	4	5.5	4	12	0.731
1	10	A	6	6	5	12	5	12	6	A	4	5.5	4	12	0.731
2	10	A	6	6	5	12	5	12	6	A	4	5.5	4	12	0.731
3	10	A	6	6	5	12	5	12	6	A	4	5.5	4	12	0.731
4	10	A	6	6	5	12	5	12	6	A	4	5.5	4	12	0.731
5	10	A	6	6	5	12	5	12	6	A	4	5.5	4	12	0.731
6	10	A	6	6	5	12	5	12	6	A	4	5.5	4	12	0.731
7	10	A	6	6	5	12	5	12	6	A	4	5.5	4	12	0.731
8	10	A	6	6	5	12	5	12	6	A	4	5.5	4	12	0.731
9	11	A	7	7	6	12	6	12	6	A	4	5.5	4	12	0.759
10	11	A	7	7	6	12	6	12	6	A	4	5.5	4	12	0.759
11	11	A	7	7	6	12	6	12	6	A	4	5.5	4	12	0.787
12	11	A	7	7	6	12	6	12	6	A	4	5.5	4	12	0.787
13	11	A	7	7	6	12	6	12	6	A	4	5.5	4	12	0.787
14	12	A	7	7	6	12	6	12	6	A	4	5.5	4	12	0.815
15	12	A	7	7	6	12	6	12	6	A	4	5.5	4	12	0.815
20	13	A	7	6	6	12	6	12	6	A	5	7	4	12	0.87
25	14	A	7	5.5	6	12	6	12	7	A	5	7.5	4	12	0.993

8' CLEAR SPAN BY 5' CLEAR HEIGHT

TOP SLAB			a_1 BAR		a_2, h BAR		h_1 BAR		WALL		v BAR		v_2, h_2 BAR		Conc.
FILL	T	SEC.	SIZE	SPC.	SIZE	SPC.	SIZE	SPC.	W	SEC.	SIZE	SPC.	SIZE	SPC.	Vol.
ft.	in.		#	in.	#	in.	#	in.	in.		#	in.	#	in.	yd.^{3} / ft.
0	10	A	6	6	5	12	5	12	6	A	4	5.5	4	12	0.769
1	10	A	6	6	5	12	5	12	6	A	4	5.5	4	12	0.769
2	10	A	6	6	5	12	5	12	6	A	4	5.5	4	12	0.769
3	10	A	6	6	5	12	5	12	6	A	4	5.5	4	12	0.769
4	10	A	6	6	5	12	5	12	6	A	4	5.5	4	12	0.769
5	10	A	6	6	5	12	5	12	6	A	4	5.5	4	12	0.769
6	10	A	6	6	5	12	5	12	6	A	4	5.5	4	12	0.769
7	10	A	6	6	5	12	5	12	6	A	4	5.5	4	12	0.769
8	10	A	6	6	5	12	5	12	6	A	5	7.5	4	12	0.769
9	11	A	7	7	6	12	6	12	6	A	5	7.5	4	12	0.796
10	11	A	7	7	6	12	6	12	6	A	5	7	4	12	0.796
11	11	A	7	7	6	12	6	12	6	A	5	7	4	12	0.824
12	11	A	7	7	6	12	6	12	6	A	5	7	4	12	0.824
13	11	A	7	7	6	12	6	12	7	A	5	7	4	12	0.845
14	12	A	7	7	6	12	6	12	7	A	5	7	4	12	0.873
15	12	A	7	7	6	12	6	12	7	A	5	7	4	12	0.895
20	13	A	7	6	6	12	6	12	7	A	5	6	4	12	0.952
25	14	A	7	5.5	6	12	6	12	8	A	5	6	4	12	1.082

8' CLEAR SPAN BY 6' CLEAR HEIGHT

TOP SLAB			a_1 BAR		a_2, h BAR		h_1 BAR		WALL		v BAR		v_2, h_2 BAR		Conc.
FILL	T	SEC.	SIZE	SPC.	SIZE	SPC.	SIZE	SPC.	W	SEC.	SIZE	SPC.	SIZE	SPC.	Vol.
ft.	in.		#	in.	#	in.	#	in.	in.		#	in.	#	in.	yd.^{3} / ft.
0	10	A	6	6	5	12	5	12	6	A	4	5.5	4	12	0.806
1	10	A	6	6	5	12	5	12	6	A	4	5.5	4	12	0.806
2	10	A	6	6	5	12	5	12	6	A	4	5.5	4	12	0.806
3	10	A	6	6	5	12	5	12	7	A	4	5.5	4	12	0.829
4	10	A	6	6	5	12	5	12	7	A	5	7.5	4	12	0.829
5	10	A	6	6	5	12	5	12	7	A	5	7	4	12	0.853
6	10	A	6	6	5	12	5	12	7	A	5	7	4	12	0.853
7	10	A	6	6	5	12	5	12	7	A	5	7	4	12	0.853
8	10	A	6	6	5	12	5	12	8	A	5	6	4	12	0.877
9	11	A	7	7	6	12	6	12	8	A	5	6	4	12	0.906
10	11	A	7	7	6	12	6	12	8	A	5	6	4	12	0.906
11	11	A	7	7	6	12	6	12	8	A	5	6	4	12	0.934
12	11	A	7	7	6	12	6	12	8	A	5	6	4	12	0.934
13	11	A	7	7	6	12	6	12	8	A	5	6	4	12	0.934
14	12	A	7	7	6	12	6	12	8	A	5	6	4	12	0.963
15	12	A	7	7	6	12	6	12	8	A	5	6	4	12	0.988
20	13	A	7	6	6	12	6	12	9	A	6	7.5	5	12	1.07
25	14	A	7	5.5	6	12	6	12	9	A	6	7	5	12	1.184

8' CLEAR SPAN BY 7' CLEAR HEIGHT

TOP SLAB			a_1 BAR		a_2, h BAR		h_1 BAR		WALL		v BAR		v_2, h_2 BAR		Conc.
FILL	T	SEC.	SIZE	SPC.	SIZE	SPC.	SIZE	SPC.	W	SEC.	SIZE	SPC.	SIZE	SPC.	Vol.
ft.	in.		#	in.	#	in.	#	in.	in.		#	in.	#	in.	yd.^{3} / ft.
0	10	A	6	6	5	12	5	12	7	A	5	7	4	12	0.897
1	10	A	6	6	5	12	5	12	7	A	5	7	4	12	0.897
2	10	A	6	6	5	12	5	12	7	A	5	7	4	12	0.897
3	10	A	6	6	5	12	5	12	7	A	5	7	4	12	0.897
4	10	A	6	6	5	12	5	12	8	A	5	6	4	12	0.924
5	10	A	6	6	5	12	5	12	8	A	5	6	4	12	0.924
6	10	A	6	6	5	12	5	12	8	A	5	6	4	12	0.924
7	10	A	6	6	5	12	5	12	8	A	5	6	4	12	0.924
8	10	A	6	6	5	12	5	12	8	A	6	7.5	5	12	0.951
9	11	A	7	7	6	12	6	12	8	A	6	7.5	5	12	0.979
10	11	A	7	7	6	12	6	12	9	A	6	7.5	5	12	1.007
11	11	A	7	7	6	12	6	12	9	A	6	7.5	5	12	1.036
12	11	A	7	7	6	12	6	12	9	A	6	7	5	12	1.063
13	11	A	7	7	6	12	6	12	9	A	6	7	5	12	1.063
14	12	A	7	7	6	12	6	12	9	A	6	7	5	12	1.093
15	12	A	7	7	6	12	6	12	9	A	6	7	5	12	1.093
20	13	A	7	6	6	12	6	12	10	A	6	6.5	5	12	1.18
25	14	A	7	5.5	6	12	6	12	11	A	6	6	5	12	1.326

8' CLEAR SPAN BY 8' CLEAR HEIGHT

TOP SLAB			a_1 BAR		a_2, h BAR		h_1 BAR		WALL		v BAR		v_2, h_2 BAR		Conc.
FILL	T	SEC.	SIZE	SPC.	SIZE	SPC.	SIZE	SPC.	W	SEC.	SIZE	SPC.	SIZE	SPC.	Vol.
ft.	in.		#	in.	#	in.	#	in.	in.		#	in.	#	in.	yd.^{3} / ft.
0	10	A	6	6	5	12	5	12	8	A	6	7.5	5	12	1
1	10	A	6	6	5	12	5	12	8	A	6	7.5	5	12	1
2	10	A	6	6	5	12	5	12	8	A	6	7.5	5	12	1
3	10	A	6	6	5	12	5	12	8	A	6	7.5	5	12	1
4	10	A	6	6	5	12	5	12	8	A	6	7.5	5	12	1
5	10	A	6	6	5	12	5	12	8	A	6	7.5	5	12	1
6	10	A	6	6	5	12	5	12	9	A	6	7.5	5	12	1.03
7	10	A	6	6	5	12	5	12	9	A	6	7.5	5	12	1.03
8	10	A	6	6	5	12	5	12	9	A	6	7	5	12	1.06
9	11	A	7	7	6	12	6	12	9	A	6	7	5	12	1.09
10	11	A	7	7	6	12	6	12	9	A	6	7	5	12	1.09
11	11	A	7	7	6	12	6	12	10	A	6	6.5	5	12	1.149
12	11	A	7	7	6	12	6	12	10	A	6	6.5	5	12	1.149
13	11	A	7	7	6	12	6	12	10	A	6	6.5	5	12	1.149
14	12	A	7	7	6	12	6	12	10	A	6	6.5	5	12	1.179
15	12	A	7	7	6	12	6	12	10	A	6	6	5	12	1.21
20	13	A	7	6	6	12	6	12	11	A	7	7	6	12	1.301
25	14	A	7	5.5	6	12	6	12	12	A	7	7	6	12	1.456

9' CLEAR SPAN BY 2' CLEAR HEIGHT

TOP SLAB			a_1 BAR		a_2, h BAR		h_1 BAR		WALL		v BAR		v_2, h_2 BAR		Conc.
FILL	T	SEC.	SIZE	SPC.	SIZE	SPC.	SIZE	SPC.	W	SEC.	SIZE	SPC.	SIZE	SPC.	Vol.
ft.	in.		#	in.	#	in.	#	in.	in.		#	in.	#	in.	yd.^{3} / ft.
0	11	A	7	7	6	12	6	12	6	A	4	5.5	4	12	0.753
1	11	A	7	7	6	12	6	12	6	A	4	5.5	4	12	0.753
2	11	A	7	7	6	12	6	12	6	A	4	5.5	4	12	0.753
3	10	A	6	6	5	12	5	12	6	A	4	5.5	4	12	0.722
4	10	A	6	6	5	12	5	12	6	A	4	5.5	4	12	0.722
5	10	A	6	6	5	12	5	12	6	A	4	5.5	4	12	0.722
6	10	A	6	6	5	12	5	12	6	A	4	5.5	4	12	0.722
7	11	A	7	7	6	12	6	12	6	A	4	5.5	4	12	0.753
8	11	A	7	7	6	12	6	12	6	A	4	5.5	4	12	0.753
9	12	A	7	7	6	12	6	12	6	A	4	5.5	4	12	0.815
10	12	A	7	6.5	6	12	6	12	6	A	4	5.5	4	12	0.846
11	12	A	7	6.5	6	12	6	12	6	A	4	5.5	4	12	0.846
12	12	A	7	6.5	6	12	6	12	6	A	4	5.5	4	12	0.846
13	12	A	7	6.5	6	12	6	12	6	A	4	5.5	4	12	0.846
14	13	A	7	6	6	12	6	12	6	A	4	5.5	4	12	0.877
15	13	A	7	6	6	12	6	12	6	A	4	5.5	4	12	0.877
20	14	A	7	5.5	6	12	6	12	6	A	4	5.5	4	12	0.969
25	15	A	8	6	6	12	6	12	6	A	4	5.5	4	12	1.031

9' CLEAR SPAN BY 3' CLEAR HEIGHT

TOP SLAB			a_1 BAR		a_2, h BAR		h_1 BAR		WALL		v BAR		v_2, h_2 BAR		Conc.
FILL	T	SEC.	SIZE	SPC.	SIZE	SPC.	SIZE	SPC.	W	SEC.	SIZE	SPC.	SIZE	SPC.	Vol.
ft.	in.		#	in.	#	in.	#	in.	in.		#	in.	#	in.	yd.^{3} / ft.
0	11	A	7	7	6	12	6	12	6	A	4	5.5	4	12	0.79
1	11	A	7	7	6	12	6	12	6	A	4	5.5	4	12	0.79
2	11	A	7	7	6	12	6	12	6	A	4	5.5	4	12	0.79
3	10	A	6	6	5	12	5	12	6	A	4	5.5	4	12	0.759
4	10	A	6	6	5	12	5	12	6	A	4	5.5	4	12	0.759
5	10	A	6	6	5	12	5	12	6	A	4	5.5	4	12	0.759
6	10	A	6	6	5	12	5	12	6	A	4	5.5	4	12	0.759
7	11	A	7	7	6	12	6	12	6	A	4	5.5	4	12	0.79
8	11	A	7	7	6	12	6	12	6	A	4	5.5	4	12	0.79
9	12	A	7	7	6	12	6	12	6	A	4	5.5	4	12	0.852
10	12	A	7	6.5	6	12	6	12	6	A	4	5.5	4	12	0.883
11	12	A	7	6.5	6	12	6	12	6	A	4	5.5	4	12	0.883
12	12	A	7	6.5	6	12	6	12	6	A	4	5.5	4	12	0.883
13	12	A	7	6.5	6	12	6	12	6	A	4	5.5	4	12	0.883
14	13	A	7	6	6	12	6	12	6	A	4	5.5	4	12	0.914
15	13	A	7	6	6	12	6	12	6	A	4	5.5	4	12	0.914
20	14	A	7	5.5	6	12	6	12	6	A	4	5.5	4	12	1.006
25	15	A	8	6	6	12	6	12	6	A	4	5.5	4	12	1.068

9' CLEAR SPAN BY 4' CLEAR HEIGHT

TOP SLAB			a_1 BAR		a_2, h BAR		h_1 BAR		WALL		v BAR		v_2, h_2 BAR		Conc.
FILL	T	SEC.	SIZE	SPC.	SIZE	SPC.	SIZE	SPC.	W	SEC.	SIZE	SPC.	SIZE	SPC.	Vol.
ft.	in.		#	in.	#	in.	#	in.	in.		#	in.	#	in.	yd.^{3} / ft.
0	11	A	7	7	6	12	6	12	6	A	4	5.5	4	12	0.827
1	11	A	7	7	6	12	6	12	6	A	4	5.5	4	12	0.827
2	11	A	7	7	6	12	6	12	6	A	4	5.5	4	12	0.827
3	10	A	6	6	5	12	5	12	6	A	4	5.5	4	12	0.796
4	10	A	6	6	5	12	5	12	6	A	4	5.5	4	12	0.796
5	10	A	6	6	5	12	5	12	6	A	4	5.5	4	12	0.796
6	10	A	6	6	5	12	5	12	6	A	4	5.5	4	12	0.796
7	11	A	7	7	6	12	6	12	6	A	4	5.5	4	12	0.827
8	11	A	7	7	6	12	6	12	6	A	4	5.5	4	12	0.827
9	12	A	7	7	6	12	6	12	6	A	4	5.5	4	12	0.889
10	12	A	7	6.5	6	12	6	12	6	A	4	5.5	4	12	0.92
11	12	A	7	6.5	6	12	6	12	6	A	4	5.5	4	12	0.92
12	12	A	7	6.5	6	12	6	12	6	A	4	5.5	4	12	0.92
13	12	A	7	6.5	6	12	6	12	6	A	4	5.5	4	12	0.92
14	13	A	7	6	6	12	6	12	6	A	4	5.5	4	12	0.951
15	13	A	7	6	6	12	6	12	6	A	4	5.5	4	12	0.951
20	14	A	7	5.5	6	12	6	12	6	A	5	7	4	12	1.043
25	15	A	8	6	6	12	6	12	7	A	5	7.5	4	12	1.146

9' CLEAR SPAN BY 5' CLEAR HEIGHT

TOP SLAB			a_1 BAR		a_2, h BAR		h_1 BAR		WALL		v BAR		v_2, h_2 BAR		Conc.
FILL	T	SEC.	SIZE	SPC.	SIZE	SPC.	SIZE	SPC.	W	SEC.	SIZE	SPC.	SIZE	SPC.	Vol.
ft.	in.		#	in.	#	in.	#	in.	in.		#	in.	#	in.	yd.^{3} / ft.
0	11	A	7	7	6	12	6	12	6	A	4	5.5	4	12	0.864
1	11	A	7	7	6	12	6	12	6	A	4	5.5	4	12	0.864
2	11	A	7	7	6	12	6	12	6	A	4	5.5	4	12	0.864
3	10	A	6	6	5	12	5	12	6	A	4	5.5	4	12	0.833
4	10	A	6	6	5	12	5	12	6	A	4	5.5	4	12	0.833
5	10	A	6	6	5	12	5	12	6	A	4	5.5	4	12	0.833
6	10	A	6	6	5	12	5	12	6	A	4	5.5	4	12	0.833
7	11	A	7	7	6	12	6	12	6	A	4	5.5	4	12	0.864
8	11	A	7	7	6	12	6	12	6	A	5	7.5	4	12	0.864
9	12	A	7	7	6	12	6	12	6	A	5	7.5	4	12	0.926
10	12	A	7	6.5	6	12	6	12	6	A	5	7	4	12	0.957
11	12	A	7	6.5	6	12	6	12	6	A	5	7	4	12	0.957
12	12	A	7	6.5	6	12	6	12	6	A	5	7	4	12	0.957
13	12	A	7	6.5	6	12	6	12	7	A	5	7	4	12	0.979
14	13	A	7	6	6	12	6	12	7	A	5	7	4	12	1.01
15	13	A	7	6	6	12	6	12	7	A	5	7	4	12	1.032
20	14	A	7	5.5	6	12	6	12	7	A	5	6	4	12	1.126
25	15	A	8	6	6	12	6	12	8	A	5	6	4	12	1.236

9' CLEAR SPAN BY 6' CLEAR HEIGHT

TOP SLAB			a_1 BAR		a_2, h BAR		h_1 BAR		WALL		v BAR		v_2, h_2 BAR		Conc.
FILL	T	SEC.	SIZE	SPC.	SIZE	SPC.	SIZE	SPC.	W	SEC.	SIZE	SPC.	SIZE	SPC.	Vol.
ft.	in.		#	in.	#	in.	#	in.	in.		#	in.	#	in.	yd.^{3} / ft.
0	11	A	7	7	6	12	6	12	6	A	4	5.5	4	12	0.901
1	11	A	7	7	6	12	6	12	6	A	4	5.5	4	12	0.901
2	11	A	7	7	6	12	6	12	6	A	4	5.5	4	12	0.901
3	10	A	6	6	5	12	5	12	7	A	4	5.5	4	12	0.894
4	10	A	6	6	5	12	5	12	7	A	5	7.5	4	12	0.894
5	10	A	6	6	5	12	5	12	7	A	5	7	4	12	0.918
6	10	A	6	6	5	12	5	12	7	A	5	7	4	12	0.918
7	11	A	7	7	6	12	6	12	7	A	5	7	4	12	0.95
8	11	A	7	7	6	12	6	12	8	A	5	6	4	12	0.974
9	12	A	7	7	6	12	6	12	8	A	5	6	4	12	1.037
10	12	A	7	6.5	6	12	6	12	8	A	5	6	4	12	1.069
11	12	A	7	6.5	6	12	6	12	8	A	5	6	4	12	1.069
12	12	A	7	6.5	6	12	6	12	8	A	5	6	4	12	1.069
13	12	A	7	6.5	6	12	6	12	8	A	5	6	4	12	1.069
14	13	A	7	6	6	12	6	12	8	A	5	6	4	12	1.1
15	13	A	7	6	6	12	6	12	8	A	5	6	4	12	1.126
20	14	A	7	5.5	6	12	6	12	9	A	6	7.5	5	12	1.247
25	15	A	8	6	6	12	6	12	9	A	6	7	5	12	1.338

9' CLEAR SPAN BY 7' CLEAR HEIGHT

TOP SLAB			a_1 BAR		a_2, h BAR		h_1 BAR		WALL		v BAR		v_2, h_2 BAR		Conc.
FILL	T	SEC.	SIZE	SPC.	SIZE	SPC.	SIZE	SPC.	W	SEC.	SIZE	SPC.	SIZE	SPC.	Vol.
ft.	in.		#	in.	#	in.	#	in.	in.		#	in.	#	in.	yd.^{3} / ft.
0	11	A	7	7	6	12	6	12	7	A	5	7	4	12	0.993
1	11	A	7	7	6	12	6	12	7	A	5	7	4	12	0.993
2	11	A	7	7	6	12	6	12	7	A	5	7	4	12	0.993
3	10	A	6	6	5	12	5	12	7	A	5	7	4	12	0.961
4	10	A	6	6	5	12	5	12	8	A	5	6	4	12	0.988
5	10	A	6	6	5	12	5	12	8	A	5	6	4	12	0.988
6	10	A	6	6	5	12	5	12	8	A	5	6	4	12	0.988
7	11	A	7	7	6	12	6	12	8	A	5	6	4	12	1.02
8	11	A	7	7	6	12	6	12	8	A	6	7.5	5	12	1.047
9	12	A	7	7	6	12	6	12	8	A	6	7.5	5	12	1.111
10	12	A	7	6.5	6	12	6	12	9	A	6	7.5	5	12	1.171
11	12	A	7	6.5	6	12	6	12	9	A	6	7.5	5	12	1.171
12	12	A	7	6.5	6	12	6	12	9	A	6	7	5	12	1.199
13	12	A	7	6.5	6	12	6	12	9	A	6	7	5	12	1.199
14	13	A	7	6	6	12	6	12	9	A	6	7	5	12	1.231
15	13	A	7	6	6	12	6	12	9	A	6	7	5	12	1.231
20	14	A	7	5.5	6	12	6	12	10	A	6	6.5	5	12	1.358
25	15	A	8	6	6	12	6	12	11	A	6	6	5	12	1.482

9' CLEAR SPAN BY 8' CLEAR HEIGHT

TOP SLAB			a_1 BAR		a_2, h BAR		h_1 BAR		WALL		v BAR		v_2, h_2 BAR		Conc.
FILL	T	SEC.	SIZE	SPC.	SIZE	SPC.	SIZE	SPC.	W	SEC.	SIZE	SPC.	SIZE	SPC.	Vol.
ft.	in.		#	in.	#	in.	#	in.	in.		#	in.	#	in.	yd.^{3} / ft.
0	11	A	7	7	6	12	6	12	8	A	6	7.5	5	12	1.097
1	11	A	7	7	6	12	6	12	8	A	6	7.5	5	12	1.097
2	11	A	7	7	6	12	6	12	8	A	6	7.5	5	12	1.097
3	10	A	6	6	5	12	5	12	8	A	6	7.5	5	12	1.065
4	10	A	6	6	5	12	5	12	8	A	6	7.5	5	12	1.065
5	10	A	6	6	5	12	5	12	8	A	6	7.5	5	12	1.065
6	10	A	6	6	5	12	5	12	9	A	6	7.5	5	12	1.095
7	11	A	7	7	6	12	6	12	9	A	6	7.5	5	12	1.127
8	11	A	7	7	6	12	6	12	9	A	6	7	5	12	1.157
9	12	A	7	7	6	12	6	12	9	A	6	7	5	12	1.222
10	12	A	7	6.5	6	12	6	12	9	A	6	7	5	12	1.255
11	12	A	7	6.5	6	12	6	12	10	A	6	6.5	5	12	1.286
12	12	A	7	6.5	6	12	6	12	10	A	6	6.5	5	12	1.286
13	12	A	7	6.5	6	12	6	12	10	A	6	6.5	5	12	1.286
14	13	A	7	6	6	12	6	12	10	A	6	6.5	5	12	1.318
15	13	A	7	6	6	12	6	12	10	A	6	6	5	12	1.35
20	14	A	7	5.5	6	12	6	12	11	A	7	7	6	12	1.481
25	15	A	8	6	6	12	6	12	12	A	7	7	6	12	1.612

9' CLEAR SPAN BY 9' CLEAR HEIGHT

TOP SLAB			a_1 BAR		a_2, h BAR		h_1 BAR		WALL		v BAR		v_2, h_2 BAR		Conc.
FILL	T	SEC.	SIZE	SPC.	SIZE	SPC.	SIZE	SPC.	W	SEC.	SIZE	SPC.	SIZE	SPC.	Vol.
ft.	in.		#	in.	#	in.	#	in.	in.		#	in.	#	in.	yd.^{3} / ft.
0	11	A	7	7	6	12	6	12	9	B	6	7	5	12	1.213
1	11	A	7	7	6	12	6	12	9	B	6	7	5	12	1.213
2	11	A	7	7	6	12	6	12	9	B	6	7	5	12	1.213
3	10	A	6	6	5	12	5	12	9	B	6	7	5	12	1.181
4	10	A	6	6	5	12	5	12	9	B	6	7	5	12	1.181
5	10	A	6	6	5	12	5	12	9	B	6	7	5	12	1.181
6	10	A	6	6	5	12	5	12	9	B	6	7	5	12	1.181
7	11	A	7	7	6	12	6	12	10	B	6	6.5	5	12	1.246
8	11	A	7	7	6	12	6	12	10	B	6	6.5	5	12	1.246
9	12	A	7	7	6	12	6	12	10	B	6	6.5	5	12	1.312
10	12	A	7	6.5	6	12	6	12	10	B	6	6	5	12	1.379
11	12	A	7	6.5	6	12	6	12	10	B	6	6	5	12	1.379
12	12	A	7	6.5	6	12	6	12	10	B	6	6	5	12	1.379
13	12	A	7	6.5	6	12	6	12	10	B	6	6	5	12	1.379
14	13	A	7	6	6	12	6	12	11	B	7	7	6	12	1.446
15	13	A	7	6	6	12	6	12	11	B	7	7	6	12	1.446
20	14	A	7	5.5	6	12	6	12	12	C	7	7	6	12	1.651
25	15	A	8	6	6	12	6	12	12	C	7	6	6	12	1.719

10' CLEAR SPAN BY 2' CLEAR HEIGHT

TOP SLAB			a_1 BAR		a_2, h BAR		h_1 BAR		WALL		v BAR		v_2, h_2 BAR		Conc.
FILL	T	SEC.	SIZE	SPC.	SIZE	SPC.	SIZE	SPC.	W	SEC.	SIZE	SPC.	SIZE	SPC.	Vol.
ft.	in.		#	in.	#	in.	#	in.	in.		#	in.	#	in.	yd.^{3} / ft.
0	12	A	7	7	6	12	6	12	6	A	4	5.5	A	12	0.889
1	12	A	7	7	6	12	6	12	6	A	4	5.5	A	12	0.889
2	12	A	7	7	6	12	6	12	6	A	4	5.5	A	12	0.889
3	11	A	7	7	6	12	6	12	6	A	4	5.5	A	12	0.855
4	11	A	7	7	6	12	6	12	6	A	4	5.5	A	12	0.855
5	11	A	7	7	6	12	6	12	6	A	4	5.5	A	12	0.855
6	11	A	7	7	6	12	6	12	6	A	4	5.5	A	12	0.855
7	12	A	7	7	6	12	6	12	6	A	4	5.5	A	12	0.889
8	12	A	7	6.5	6	12	6	12	6	A	4	5.5	A	12	0.923
9	12	A	7	6.5	6	12	6	12	6	A	4	5.5	A	12	0.923
10	12	A	7	6.5	6	12	6	12	6	A	4	5.5	A	12	0.923
11	13	A	7	6	6	12	6	12	6	A	4	5.5	A	12	0.957
12	13	A	7	6	6	12	6	12	6	A	4	5.5	A	12	0.991
13	13	A	7	6	6	12	6	12	6	A	4	5.5	A	12	0.991
14	13	A	7	6	6	12	6	12	6	A	4	5.5	A	12	0.991
15	14	A	7	5.5	6	12	6	12	6	A	4	5.5	A	12	1.059
20	15	A	8	6.5	6	12	6	12	6	A	4	5.5	A	12	1.127
25	17	A	8	5.5	6	12	6	12	6	A	4	5.5	A	12	1.262

10' CLEAR SPAN BY 3' CLEAR HEIGHT

TOP SLAB			a_1 BAR		a_2, h BAR		h_1 BAR		WALL		v BAR		v_2, h_2 BAR		Conc.
FILL	T	SEC.	SIZE	SPC.	SIZE	SPC.	SIZE	SPC.	W	SEC.	SIZE	SPC.	SIZE	SPC.	Vol.
ft.	in.		#	in.	#	in.	#	in.	in.		#	in.	#	in.	yd.^{3} / ft.
0	12	A	7	7	6	12	6	12	6	A	4	5.5	4	12	0.926
1	12	A	7	7	6	12	6	12	6	A	4	5.5	4	12	0.926
2	12	A	7	7	6	12	6	12	6	A	4	5.5	4	12	0.926
3	11	A	7	7	6	12	6	12	6	A	4	5.5	4	12	0.892
4	11	A	7	7	6	12	6	12	6	A	4	5.5	4	12	0.892
5	11	A	7	7	6	12	6	12	6	A	4	5.5	4	12	0.892
6	11	A	7	7	6	12	6	12	6	A	4	5.5	4	12	0.892
7	12	A	7	7	6	12	6	12	6	A	4	5.5	4	12	0.926
8	12	A	7	6.5	6	12	6	12	6	A	4	5.5	4	12	0.96
9	12	A	7	6.5	6	12	6	12	6	A	4	5.5	4	12	0.96
10	12	A	7	6.5	6	12	6	12	6	A	4	5.5	4	12	0.96
11	13	A	7	6	6	12	6	12	6	A	4	5.5	4	12	0.994
12	13	A	7	6	6	12	6	12	6	A	4	5.5	4	12	1.028
13	13	A	7	6	6	12	6	12	6	A	4	5.5	4	12	1.028
14	13	A	7	6	6	12	6	12	6	A	4	5.5	4	12	1.028
15	14	A	7	5.5	6	12	6	12	6	A	4	5.5	4	12	1.096
20	15	A	8	6.5	6	12	6	12	6	A	4	5.5	4	12	1.164
25	17	A	8	5.5	6	12	6	12	6	A	4	5.5	4	12	1.299

10' CLEAR SPAN BY 4' CLEAR HEIGHT

TOP SLAB			a_1 BAR		a_2, h BAR		h_1 BAR		WALL		v BAR		v_2, h_2 BAR		Conc.
FILL	T	SEC.	SIZE	SPC.	SIZE	SPC.	SIZE	SPC.	W	SEC.	SIZE	SPC.	SIZE	SPC.	Vol.
ft.	in.		#	in.	#	in.	#	in.	in.		#	in.	#	in.	yd.^{3} / ft.
0	12	A	7	7	6	12	6	12	6	A	4	5.5	4	12	0.963
1	12	A	7	7	6	12	6	12	6	A	4	5.5	4	12	0.963
2	12	A	7	7	6	12	6	12	6	A	4	5.5	4	12	0.963
3	11	A	7	7	6	12	6	12	6	A	4	5.5	4	12	0.929
4	11	A	7	7	6	12	6	12	6	A	4	5.5	4	12	0.929
5	11	A	7	7	6	12	6	12	6	A	4	5.5	4	12	0.929
6	11	A	7	7	6	12	6	12	6	A	4	5.5	4	12	0.929
7	12	A	7	7	6	12	6	12	6	A	4	5.5	4	12	0.963
8	12	A	7	6.5	6	12	6	12	6	A	4	5.5	4	12	0.997
9	12	A	7	6.5	6	12	6	12	6	A	4	5.5	4	12	0.997
10	12	A	7	6.5	6	12	6	12	6	A	4	5.5	4	12	0.997
11	13	A	7	6	6	12	6	12	6	A	4	5.5	4	12	1.031
12	13	A	7	6	6	12	6	12	6	A	4	5.5	4	12	1.065
13	13	A	7	6	6	12	6	12	6	A	4	5.5	4	12	1.065
14	13	A	7	6	6	12	6	12	6	A	4	5.5	4	12	1.065
15	14	A	7	5.5	6	12	6	12	6	A	4	5.5	4	12	1.133
20	15	A	8	6.5	6	12	6	12	6	A	5	7	4	12	1.201
25	17	A	8	5.5	6	12	6	12	7	A	5	7.5	4	12	1.379

10' CLEAR SPAN BY 5' CLEAR HEIGHT

TOP SLAB			a_1 BAR		a_2, h BAR		h_1 BAR		WALL		v BAR		v_2, h_2 BAR		Conc.
FILL	T	SEC.	SIZE	SPC.	SIZE	SPC.	SIZE	SPC.	W	SEC.	SIZE	SPC.	SIZE	SPC.	Vol.
ft.	in.		#	in.	#	in.	#	in.	in.		#	in.	#	in.	yd.^{3} / ft.
0	12	A	7	7	6	12	6	12	6	A	4	5.5	4	12	1
1	12	A	7	7	6	12	6	12	6	A	4	5.5	4	12	1
2	12	A	7	7	6	12	6	12	6	A	4	5.5	4	12	1
3	11	A	7	7	6	12	6	12	6	A	4	5.5	4	12	0.966
4	11	A	7	7	6	12	6	12	6	A	4	5.5	4	12	0.966
5	11	A	7	7	6	12	6	12	6	A	4	5.5	4	12	0.966
6	11	A	7	7	6	12	6	12	6	A	4	5.5	4	12	0.966
7	12	A	7	7	6	12	6	12	6	A	4	5.5	4	12	1
8	12	A	7	6.5	6	12	6	12	6	A	5	7.5	4	12	1.034
9	12	A	7	6.5	6	12	6	12	6	A	5	7.5	4	12	1.034
10	12	A	7	6.5	6	12	6	12	6	A	5	7	4	12	1.034
11	13	A	7	6	6	12	6	12	6	A	5	7	4	12	1.068
12	13	A	7	6	6	12	6	12	6	A	5	7	4	12	1.102
13	13	A	7	6	6	12	6	12	7	A	5	7	4	12	1.124
14	13	A	7	6	6	12	6	12	7	A	5	7	4	12	1.124
15	14	A	7	5.5	6	12	6	12	7	A	5	7	4	12	1.216
20	15	A	8	6.5	6	12	6	12	7	A	5	6	4	12	1.284
25	17	A	8	5.5	6	12	6	12	8	A	5	6	4	12	1.471

10' CLEAR SPAN BY 6' CLEAR HEIGHT

TOP SLAB			a_1 BAR		a_2, h BAR		h_1 BAR		WALL		v BAR		v_2, h_2 BAR		Conc.
FILL	T	SEC.	SIZE	SPC.	SIZE	SPC.	SIZE	SPC.	W	SEC.	SIZE	SPC.	SIZE	SPC.	Vol.
ft.	in.		#	in.	#	in.	#	in.	in.		#	in.	#	in.	yd.^{3} / ft.
0	12	A	7	7	6	12	6	12	6	A	4	5.5	4	12	1.037
1	12	A	7	7	6	12	6	12	6	A	4	5.5	4	12	1.037
2	12	A	7	7	6	12	6	12	6	A	4	5.5	4	12	1.037
3	11	A	7	7	6	12	6	12	7	A	4	5.5	4	12	1.028
4	11	A	7	7	6	12	6	12	7	A	5	7.5	4	12	1.028
5	11	A	7	7	6	12	6	12	7	A	5	7	4	12	1.052
6	11	A	7	7	6	12	6	12	7	A	5	7	4	12	1.052
7	12	A	7	7	6	12	6	12	7	A	5	7	4	12	1.086
8	12	A	7	6.5	6	12	6	12	8	A	5	6	4	12	1.146
9	12	A	7	6.5	6	12	6	12	8	A	5	6	4	12	1.146
10	12	A	7	6.5	6	12	6	12	8	A	5	6	4	12	1.146
11	13	A	7	6	6	12	6	12	8	A	5	6	4	12	1.181
12	13	A	7	6	6	12	6	12	8	A	5	6	4	12	1.215
13	13	A	7	6	6	12	6	12	8	A	5	6	4	12	1.215
14	13	A	7	6	6	12	6	12	8	A	5	6	4	12	1.215
15	14	A	7	5.5	6	12	6	12	8	A	5	6	4	12	1.311
20	15	A	8	6.5	6	12	6	12	9	A	6	7.5	5	12	1.407
25	17	A	8	5.5	6	12	6	12	9	A	6	7	5	12	1.576

10' CLEAR SPAN BY 7' CLEAR HEIGHT

TOP SLAB			a_1 BAR		a_2, h BAR		h_1 BAR		WALL		v BAR		v_2, h_2 BAR		Conc.
FILL	T	SEC.	SIZE	SPC.	SIZE	SPC.	SIZE	SPC.	W	SEC.	SIZE	SPC.	SIZE	SPC.	Vol.
ft.	in.		#	in.	#	in.	#	in.	in.		#	in.	#	in.	yd.^{3} / ft.
0	12	A	7	7	6	12	6	12	7	A	5	7	4	12	1.13
1	12	A	7	7	6	12	6	12	7	A	5	7	4	12	1.13
2	12	A	7	7	6	12	6	12	7	A	5	7	4	12	1.13
3	11	A	7	7	6	12	6	12	7	A	5	7	4	12	1.095
4	11	A	7	7	6	12	6	12	8	A	5	6	4	12	1.123
5	11	A	7	7	6	12	6	12	8	A	5	6	4	12	1.123
6	11	A	7	7	6	12	6	12	8	A	5	6	4	12	1.123
7	12	A	7	7	6	12	6	12	8	A	5	6	4	12	1.157
8	12	A	7	6.5	6	12	6	12	8	A	6	7.5	5	12	1.22
9	12	A	7	6.5	6	12	6	12	8	A	6	7.5	5	12	1.22
10	12	A	7	6.5	6	12	6	12	9	A	6	7.5	5	12	1.248
11	13	A	7	6	6	12	6	12	9	A	6	7.5	5	12	1.283
12	13	A	7	6	6	12	6	12	9	A	6	7	5	12	1.347
13	13	A	7	6	6	12	6	12	9	A	6	7	5	12	1.347
14	13	A	7	6	6	12	6	12	9	A	6	7	5	12	1.347
15	14	A	7	5.5	6	12	6	12	9	A	6	7	5	12	1.418
20	15	A	8	6.5	6	12	6	12	10	A	6	6.5	5	12	1.519
25	17	A	8	5.5	6	12	6	12	11	A	6	6	5	12	1.723

10' CLEAR SPAN BY 8' CLEAR HEIGHT

TOP SLAB			a_1 BAR		a_2, h BAR		h_1 BAR		WALL		v BAR		v_2, h_2 BAR		Conc.
FILL	T	SEC.	SIZE	SPC.	SIZE	SPC.	SIZE	SPC.	W	SEC.	SIZE	SPC.	SIZE	SPC.	Vol.
ft.	in.		#	in.	#	in.	#	in.	in.		#	in.	#	in.	yd.^{3} / ft.
0	12	A	7	7	6	12	6	12	8	A	6	7.5	5	12	1.235
1	12	A	7	7	6	12	6	12	8	A	6	7.5	5	12	1.235
2	12	A	7	7	6	12	6	12	8	A	6	7.5	5	12	1.235
3	11	A	7	7	6	12	6	12	8	A	6	7.5	5	12	1.2
4	11	A	7	7	6	12	6	12	8	A	6	7.5	5	12	1.2
5	11	A	7	7	6	12	6	12	8	A	6	7.5	5	12	1.2
6	11	A	7	7	6	12	6	12	9	A	6	7.5	5	12	1.23
7	12	A	7	7	6	12	6	12	9	A	6	7.5	5	12	1.265
8	12	A	7	6.5	6	12	6	12	9	A	6	7	5	12	1.332
9	12	A	7	6.5	6	12	6	12	9	A	6	7	5	12	1.332
10	12	A	7	6.5	6	12	6	12	9	A	6	7	5	12	1.332
11	13	A	7	6	6	12	6	12	10	A	6	6.5	5	12	1.399
12	13	A	7	6	6	12	6	12	10	A	6	6.5	5	12	1.434
13	13	A	7	6	6	12	6	12	10	A	6	6.5	5	12	1.434
14	13	A	7	6	6	12	6	12	10	A	6	6.5	5	12	1.434
15	14	A	7	5.5	6	12	6	12	10	A	6	6	5	12	1.538
20	15	A	8	6.5	6	12	6	12	11	A	7	7	6	12	1.643
25	17	A	8	5.5	6	12	6	12	12	A	7	7	6	12	1.855

10' CLEAR SPAN BY 9' CLEAR HEIGHT

TOP SLAB			a_1 BAR		a_2, h BAR		h_1 BAR		WALL		v BAR		v_2, h_2 BAR		Conc.
FILL	T	SEC.	SIZE	SPC.	SIZE	SPC.	SIZE	SPC.	W	SEC.	SIZE	SPC.	SIZE	SPC.	Vol.
ft.	in.		#	in.	#	in.	#	in.	in.		#	in.	#	in.	yd.^{3} / ft.
0	12	A	7	7	6	12	6	12	9	B	6	7	5	12	1.352
1	12	A	7	7	6	12	6	12	9	B	6	7	5	12	1.352
2	12	A	7	7	6	12	6	12	9	B	6	7	5	12	1.352
3	11	A	7	7	6	12	6	12	9	B	6	7	5	12	1.316
4	11	A	7	7	6	12	6	12	9	B	6	7	5	12	1.316
5	11	A	7	7	6	12	6	12	9	B	6	7	5	12	1.316
6	11	A	7	7	6	12	6	12	9	B	6	7	5	12	1.316
7	12	A	7	7	6	12	6	12	10	B	6	6.5	5	12	1.386
8	12	A	7	6.5	6	12	6	12	10	B	6	6.5	5	12	1.422
9	12	A	7	6.5	6	12	6	12	10	B	6	6.5	5	12	1.422
10	12	A	7	6.5	6	12	6	12	10	B	6	6	5	12	1.456
11	13	A	7	6	6	12	6	12	10	B	6	6	5	12	1.492
12	13	A	7	6	6	12	6	12	10	B	6	6	5	12	1.528
13	13	A	7	6	6	12	6	12	10	B	6	6	5	12	1.528
14	13	A	7	6	6	12	6	12	11	B	7	7	6	12	1.563
15	14	A	7	5.5	6	12	6	12	11	B	7	7	6	12	1.635
20	15	A	8	6.5	6	12	6	12	12	C	7	7	6	12	1.815
25	17	A	8	5.5	6	12	6	12	12	C	7	6	6	12	1.963

10' CLEAR SPAN BY 10' CLEAR HEIGHT

TOP SLAB			a_1 BAR		a_2, h BAR		h_1 BAR		WALL		v BAR		v_2, h_2 BAR		Conc.
FILL	T	SEC.	SIZE	SPC.	SIZE	SPC.	SIZE	SPC.	W	SEC.	SIZE	SPC.	SIZE	SPC.	Vol.
ft.	in.		#	in.	#	in.	#	in.	in.		#	in.	#	in.	yd.^{3} / ft.
0	12	A	7	7	6	12	6	12	10	B	6	6	5	12	1.481
1	12	A	7	7	6	12	6	12	10	B	6	6	5	12	1.481
2	12	A	7	7	6	12	6	12	10	B	6	6	5	12	1.481
3	11	A	7	7	6	12	6	12	10	B	6	6	5	12	1.445
4	11	A	7	7	6	12	6	12	10	B	6	6	5	12	1.445
5	11	A	7	7	6	12	6	12	10	B	6	6	5	12	1.445
6	11	A	7	7	6	12	6	12	10	B	6	6	5	12	1.445
7	12	A	7	7	6	12	6	12	10	B	6	6	5	12	1.481
8	12	A	7	6.5	6	12	6	12	10	B	6	6	5	12	1.517
9	12	A	7	6.5	6	12	6	12	11	B	6	6	5	12	1.555
10	12	A	7	6.5	6	12	6	12	11	B	7	7	6	12	1.555
11	13	A	7	6	6	12	6	12	11	B	7	7	6	12	1.629
12	13	A	7	6	6	12	6	12	11	B	7	7	6	12	1.665
13	13	A	7	6	6	12	6	12	11	B	7	7	6	12	1.665
14	13	A	7	6	6	12	6	12	12	B	7	7	6	12	1.703
15	14	A	7	5.5	6	12	6	12	12	C	7	6.5	6	12	1.815
20	15	A	8	6.5	6	12	6	12	13	C	7	6	6	12	1.928
25	17	A	8	5.5	6	12	6	12	14	C	7	5.5	6	12	2.157

11' CLEAR SPAN BY 2' CLEAR HEIGHT

TOP SLAB			a_1 BAR		a_2, h BAR		h_1 BAR		WALL		v BAR		v_2, h_2 BAR		Conc.
FILL	T	SEC.	SIZE	SPC.	SIZE	SPC.	SIZE	SPC.	W	SEC.	SIZE	SPC.	SIZE	SPC.	Vol.
ft.	in.		#	in.	#	in.	#	in.	in.		#	in.	#	in.	yd.^{3} / ft.
0	12	A	7	6.5	6	12	6	12	6	A	4	5.5	A	12	1
1	12	A	7	6.5	6	12	6	12	6	A	4	5.5	A	12	1
2	12	A	7	6.5	6	12	6	12	6	A	4	5.5	A	12	1
3	12	A	7	6.5	6	12	6	12	6	A	4	5.5	A	12	1
4	12	A	7	6.5	6	12	6	12	6	A	4	5.5	A	12	1
5	12	A	7	6.5	6	12	6	12	6	A	4	5.5	A	12	1
6	12	A	7	6.5	6	12	6	12	6	A	4	5.5	A	12	1
7	12	A	7	6.5	6	12	6	12	6	A	4	5.5	A	12	1
8	13	A	7	6	6	12	6	12	6	A	4	5.5	A	12	1.037
9	13	A	7	6	6	12	6	12	6	A	4	5.5	A	12	1.074
10	14	A	7	5.5	6	12	6	12	6	A	4	5.5	A	12	1.111
11	14	A	7	5.5	6	12	6	12	6	A	4	5.5	A	12	1.111
12	14	A	7	5.5	6	12	6	12	6	A	4	5.5	A	12	1.111
13	14	A	7	5.5	6	12	6	12	6	A	4	5.5	A	12	1.111
14	14	A	7	5.5	6	12	6	12	6	A	4	5.5	A	12	1.148
15	15	A	7	5	6	12	6	12	6	A	4	5.5	A	12	1.185
20	17	A	8	5.5	6	12	6	12	6	A	4	5.5	A	12	1.37
25	18	A	9	6.5	6	12	6	12	6	A	4	5.5	A	12	1.444

11' CLEAR SPAN BY 3' CLEAR HEIGHT

TOP SLAB			a_1 BAR		a_2, h BAR		h_1 BAR		WALL		v BAR		v_2, h_2 BAR		Conc.
FILL	T	SEC.	SIZE	SPC.	SIZE	SPC.	SIZE	SPC.	W	SEC.	SIZE	SPC.	SIZE	SPC.	Vol.
ft.	in.		#	in.	#	in.	#	in.	in.		#	in.	#	in.	yd.^{3} / ft.
0	12	A	7	6.5	6	12	6	12	6	A	4	5.5	4	12	1.037
1	12	A	7	6.5	6	12	6	12	6	A	4	5.5	4	12	1.037
2	12	A	7	6.5	6	12	6	12	6	A	4	5.5	4	12	1.037
3	12	A	7	6.5	6	12	6	12	6	A	4	5.5	4	12	1.037
4	12	A	7	6.5	6	12	6	12	6	A	4	5.5	4	12	1.037
5	12	A	7	6.5	6	12	6	12	6	A	4	5.5	4	12	1.037
6	12	A	7	6.5	6	12	6	12	6	A	4	5.5	4	12	1.037
7	12	A	7	6.5	6	12	6	12	6	A	4	5.5	4	12	1.037
8	13	A	7	6	6	12	6	12	6	A	4	5.5	4	12	1.074
9	13	A	7	6	6	12	6	12	6	A	4	5.5	4	12	1.111
10	14	A	7	5.5	6	12	6	12	6	A	4	5.5	4	12	1.148
11	14	A	7	5.5	6	12	6	12	6	A	4	5.5	4	12	1.148
12	14	A	7	5.5	6	12	6	12	6	A	4	5.5	4	12	1.148
13	14	A	7	5.5	6	12	6	12	6	A	4	5.5	4	12	1.148
14	14	A	7	5.5	6	12	6	12	6	A	4	5.5	4	12	1.185
15	15	A	7	5	6	12	6	12	6	A	4	5.5	4	12	1.222
20	17	A	8	5.5	6	12	6	12	6	A	4	5.5	4	12	1.407
25	18	A	9	6.5	6	12	6	12	6	A	4	5.5	4	12	1.481

11' CLEAR SPAN BY 4' CLEAR HEIGHT

TOP SLAB			a_1 BAR		a_2, h BAR		h_1 BAR		WALL		v BAR		v_2, h_2 BAR		Conc.
FILL	T	SEC.	SIZE	SPC.	SIZE	SPC.	SIZE	SPC.	W	SEC.	SIZE	SPC.	SIZE	SPC.	Vol.
ft.	in.		#	in.	#	in.	#	in.	in.		#	in.	#	in.	yd.^{3} / ft.
0	12	A	7	6.5	6	12	6	12	6	A	4	5.5	4	12	1.074
1	12	A	7	6.5	6	12	6	12	6	A	4	5.5	4	12	1.074
2	12	A	7	6.5	6	12	6	12	6	A	4	5.5	4	12	1.074
3	12	A	7	6.5	6	12	6	12	6	A	4	5.5	4	12	1.074
4	12	A	7	6.5	6	12	6	12	6	A	4	5.5	4	12	1.074
5	12	A	7	6.5	6	12	6	12	6	A	4	5.5	4	12	1.074
6	12	A	7	6.5	6	12	6	12	6	A	4	5.5	4	12	1.074
7	12	A	7	6.5	6	12	6	12	6	A	4	5.5	4	12	1.074
8	13	A	7	6	6	12	6	12	6	A	4	5.5	4	12	1.111
9	13	A	7	6	6	12	6	12	6	A	4	5.5	4	12	1.148
10	14	A	7	5.5	6	12	6	12	6	A	4	5.5	4	12	1.185
11	14	A	7	5.5	6	12	6	12	6	A	4	5.5	4	12	1.185
12	14	A	7	5.5	6	12	6	12	6	A	4	5.5	4	12	1.185
13	14	A	7	5.5	6	12	6	12	6	A	4	5.5	4	12	1.185
14	14	A	7	5.5	6	12	6	12	6	A	4	5.5	4	12	1.222
15	15	A	7	5	6	12	6	12	6	A	4	5.5	4	12	1.259
20	17	A	8	5.5	6	12	6	12	6	A	5	7	4	12	1.444
25	18	A	9	6.5	6	12	6	12	7	A	5	7.5	4	12	1.562

11' CLEAR SPAN BY 5' CLEAR HEIGHT

TOP SLAB			a_1 BAR		a_2, h BAR		h_1 BAR		WALL		v BAR		v_2, h_2 BAR		Conc.
FILL	T	SEC.	SIZE	SPC.	SIZE	SPC.	SIZE	SPC.	W	SEC.	SIZE	SPC.	SIZE	SPC.	Vol.
ft.	in.		#	in.	#	in.	#	in.	in.		#	in.	#	in.	yd.^{3} / ft.
0	12	A	7	6.5	6	12	6	12	6	A	4	5.5	4	12	1.111
1	12	A	7	6.5	6	12	6	12	6	A	4	5.5	4	12	1.111
2	12	A	7	6.5	6	12	6	12	6	A	4	5.5	4	12	1.111
3	12	A	7	6.5	6	12	6	12	6	A	4	5.5	4	12	1.111
4	12	A	7	6.5	6	12	6	12	6	A	4	5.5	4	12	1.111
5	12	A	7	6.5	6	12	6	12	6	A	4	5.5	4	12	1.111
6	12	A	7	6.5	6	12	6	12	6	A	4	5.5	4	12	1.111
7	12	A	7	6.5	6	12	6	12	6	A	4	5.5	4	12	1.111
8	13	A	7	6	6	12	6	12	6	A	5	7.5	4	12	1.148
9	13	A	7	6	6	12	6	12	6	A	5	7.5	4	12	1.185
10	14	A	7	5.5	6	12	6	12	6	A	5	7	4	12	1.222
11	14	A	7	5.5	6	12	6	12	6	A	5	7	4	12	1.222
12	14	A	7	5.5	6	12	6	12	6	A	5	7	4	12	1.222
13	14	A	7	5.5	6	12	6	12	7	A	5	7	4	12	1.245
14	14	A	7	5.5	6	12	6	12	7	A	5	7	4	12	1.282
15	15	A	7	5	6	12	6	12	7	A	5	7	4	12	1.343
20	17	A	8	5.5	6	12	6	12	7	A	5	6	4	12	1.53
25	18	A	9	6.5	6	12	6	12	8	A	5	6	4	12	1.655

11' CLEAR SPAN BY 6' CLEAR HEIGHT

TOP SLAB			a_1 BAR		a_2, h BAR		h_1 BAR		WALL		v BAR		v_2, h_2 BAR		Conc.
FILL	T	SEC.	SIZE	SPC.	SIZE	SPC.	SIZE	SPC.	W	SEC.	SIZE	SPC.	SIZE	SPC.	Vol.
ft.	in.		#	in.	#	in.	#	in.	in.		#	in.	#	in.	yd.^{3} / ft.
0	12	A	7	6.5	6	12	6	12	6	A	4	5.5	4	12	1.148
1	12	A	7	6.5	6	12	6	12	6	A	4	5.5	4	12	1.148
2	12	A	7	6.5	6	12	6	12	6	A	4	5.5	4	12	1.148
3	12	A	7	6.5	6	12	6	12	7	A	4	5.5	4	12	1.173
4	12	A	7	6.5	6	12	6	12	7	A	5	7.5	4	12	1.173
5	12	A	7	6.5	6	12	6	12	7	A	5	7	4	12	1.198
6	12	A	7	6.5	6	12	6	12	7	A	5	7	4	12	1.198
7	12	A	7	6.5	6	12	6	12	7	A	5	7	4	12	1.198
8	13	A	7	6	6	12	6	12	8	A	5	6	4	12	1.261
9	13	A	7	6	6	12	6	12	8	A	5	6	4	12	1.299
10	14	A	7	5.5	6	12	6	12	8	A	5	6	4	12	1.336
11	14	A	7	5.5	6	12	6	12	8	A	5	6	4	12	1.336
12	14	A	7	5.5	6	12	6	12	8	A	5	6	4	12	1.336
13	14	A	7	5.5	6	12	6	12	8	A	5	6	4	12	1.336
14	14	A	7	5.5	6	12	6	12	8	A	5	6	4	12	1.374
15	15	A	7	5	6	12	6	12	8	A	5	6	4	12	1.438
20	17	A	8	5.5	6	12	6	12	9	A	6	7.5	5	12	1.656
25	18	A	9	6.5	6	12	6	12	9	A	6	7	5	12	1.761

11' CLEAR SPAN BY 7' CLEAR HEIGHT

TOP SLAB			a_1 BAR		a_2, h BAR		h_1 BAR		WALL		v BAR		v_2, h_2 BAR		Conc.
FILL	T	SEC.	SIZE	SPC.	SIZE	SPC.	SIZE	SPC.	W	SEC.	SIZE	SPC.	SIZE	SPC.	Vol.
ft.	in.		#	in.	#	in.	#	in.	in.		#	in.	#	in.	yd.^{3} / ft.
0	12	A	7	6.5	6	12	6	12	7	A	5	7	4	12	1.241
1	12	A	7	6.5	6	12	6	12	7	A	5	7	4	12	1.241
2	12	A	7	6.5	6	12	6	12	7	A	5	7	4	12	1.241
3	12	A	7	6.5	6	12	6	12	7	A	5	7	4	12	1.241
4	12	A	7	6.5	6	12	6	12	8	A	5	6	4	12	1.269
5	12	A	7	6.5	6	12	6	12	8	A	5	6	4	12	1.269
6	12	A	7	6.5	6	12	6	12	8	A	5	6	4	12	1.269
7	12	A	7	6.5	6	12	6	12	8	A	5	6	4	12	1.269
8	13	A	7	6	6	12	6	12	8	A	6	7.5	5	12	1.335
9	13	A	7	6	6	12	6	12	8	A	6	7.5	5	12	1.373
10	14	A	7	5.5	6	12	6	12	9	A	6	7.5	5	12	1.44
11	14	A	7	5.5	6	12	6	12	9	A	6	7.5	5	12	1.44
12	14	A	7	5.5	6	12	6	12	9	A	6	7	5	12	1.469
13	14	A	7	5.5	6	12	6	12	9	A	6	7	5	12	1.469
14	14	A	7	5.5	6	12	6	12	9	A	6	7	5	12	1.508
15	15	A	7	5	6	12	6	12	9	A	6	7	5	12	1.546
20	17	A	8	5.5	6	12	6	12	10	A	6	6.5	5	12	1.77
25	18	A	9	6.5	6	12	6	12	11	A	6	6	5	12	1.91

11' CLEAR SPAN BY 8' CLEAR HEIGHT

TOP SLAB			a_1 BAR		a_2, h BAR		h_1 BAR		WALL		v BAR		v_2, h_2 BAR		Conc.
FILL	T	SEC.	SIZE	SPC.	SIZE	SPC.	SIZE	SPC.	W	SEC.	SIZE	SPC.	SIZE	SPC.	Vol.
ft.	in.		#	in.	#	in.	#	in.	in.		#	in.	#	in.	yd.^{3} / ft.
0	12	A	7	6.5	6	12	6	12	8	A	6	7.5	5	12	1.347
1	12	A	7	6.5	6	12	6	12	8	A	6	7.5	5	12	1.347
2	12	A	7	6.5	6	12	6	12	8	A	6	7.5	5	12	1.347
3	12	A	7	6.5	6	12	6	12	8	A	6	7.5	5	12	1.347
4	12	A	7	6.5	6	12	6	12	8	A	6	7.5	5	12	1.347
5	12	A	7	6.5	6	12	6	12	8	A	6	7.5	5	12	1.347
6	12	A	7	6.5	6	12	6	12	9	A	6	7.5	5	12	1.378
7	12	A	7	6.5	6	12	6	12	9	A	6	7.5	5	12	1.378
8	13	A	7	6	6	12	6	12	9	A	6	7	5	12	1.448
9	13	A	7	6	6	12	6	12	9	A	6	7	5	12	1.486
10	14	A	7	5.5	6	12	6	12	9	A	6	7	5	12	1.525
11	14	A	7	5.5	6	12	6	12	10	A	6	6.5	5	12	1.557
12	14	A	7	5.5	6	12	6	12	10	A	6	6.5	5	12	1.557
13	14	A	7	5.5	6	12	6	12	10	A	6	6.5	5	12	1.557
14	14	A	7	5.5	6	12	6	12	10	A	6	6.5	5	12	1.595
15	15	A	7	5	6	12	6	12	10	A	6	6	5	12	1.667
20	17	A	8	5.5	6	12	6	12	11	A	7	7	6	12	1.896
25	18	A	9	6.5	6	12	6	12	12	A	7	7	6	12	2.043

11' CLEAR SPAN BY 9' CLEAR HEIGHT

TOP SLAB			a_1 BAR		a_2, h BAR		h_1 BAR		WALL		v BAR		v_2, h_2 BAR		Conc.
FILL	T	SEC.	SIZE	SPC.	SIZE	SPC.	SIZE	SPC.	W	SEC.	SIZE	SPC.	SIZE	SPC.	Vol.
ft.	in.		#	in.	#	in.	#	in.	in.		#	in.	#	in.	yd.^{3} / ft.
0	12	A	7	6.5	6	12	6	12	9	B	6	7	5	12	1.465
1	12	A	7	6.5	6	12	6	12	9	B	6	7	5	12	1.465
2	12	A	7	6.5	6	12	6	12	9	B	6	7	5	12	1.465
3	12	A	7	6.5	6	12	6	12	9	B	6	7	5	12	1.465
4	12	A	7	6.5	6	12	6	12	9	B	6	7	5	12	1.465
5	12	A	7	6.5	6	12	6	12	9	B	6	7	5	12	1.465
6	12	A	7	6.5	6	12	6	12	9	B	6	7	5	12	1.465
7	12	A	7	6.5	6	12	6	12	10	B	6	6.5	5	12	1.499
8	13	A	7	6	6	12	6	12	10	B	6	6.5	5	12	1.538
9	13	A	7	6	6	12	6	12	10	B	6	6.5	5	12	1.576
10	14	A	7	5.5	6	12	6	12	10	B	6	6	5	12	1.65
11	14	A	7	5.5	6	12	6	12	10	B	6	6	5	12	1.65
12	14	A	7	5.5	6	12	6	12	10	B	6	6	5	12	1.65
13	14	A	7	5.5	6	12	6	12	10	B	6	6	5	12	1.65
14	14	A	7	5.5	6	12	6	12	11	B	7	7	6	12	1.725
15	15	A	7	5	6	12	6	12	11	B	7	7	6	12	1.764
20	17	A	8	5.5	6	12	6	12	12	C	7	7	6	12	2.071
25	18	A	9	6.5	6	12	6	12	12	C	7	6	6	12	2.151

11' CLEAR SPAN BY 10' CLEAR HEIGHT

TOP SLAB			a_1 BAR		a_2, h BAR		h_1 BAR		WALL		v BAR		v_2, h_2 BAR		Conc.
FILL	T	SEC.	SIZE	SPC.	SIZE	SPC.	SIZE	SPC.	W	SEC.	SIZE	SPC.	SIZE	SPC.	Vol.
ft.	in.		#	in.	#	in.	#	in.	in.		#	in.	#	in.	yd.^{3} / ft.
0	12	A	7	6.5	6	12	6	12	10	B	6	6	5	12	1.595
1	12	A	7	6.5	6	12	6	12	10	B	6	6	5	12	1.595
2	12	A	7	6.5	6	12	6	12	10	B	6	6	5	12	1.595
3	12	A	7	6.5	6	12	6	12	10	B	6	6	5	12	1.595
4	12	A	7	6.5	6	12	6	12	10	B	6	6	5	12	1.595
5	12	A	7	6.5	6	12	6	12	10	B	6	6	5	12	1.595
6	12	A	7	6.5	6	12	6	12	10	B	6	6	5	12	1.595
7	12	A	7	6.5	6	12	6	12	10	B	6	6	5	12	1.595
8	13	A	7	6	6	12	6	12	10	B	6	6	5	12	1.634
9	13	A	7	6	6	12	6	12	11	B	6	6	5	12	1.711
10	14	A	7	5.5	6	12	6	12	11	B	7	7	6	12	1.75
11	14	A	7	5.5	6	12	6	12	11	B	7	7	6	12	1.788
12	14	A	7	5.5	6	12	6	12	11	B	7	7	6	12	1.788
13	14	A	7	5.5	6	12	6	12	11	B	7	7	6	12	1.788
14	14	A	7	5.5	6	12	6	12	12	B	7	7	6	12	1.866
15	15	A	7	5	6	12	6	12	12	C	7	6.5	6	12	1.944
20	17	A	8	5.5	6	12	6	12	13	C	7	6	6	12	2.185
25	18	A	9	6.5	6	12	6	12	14	C	7	5.5	6	12	2.346

11' CLEAR SPAN BY 11' CLEAR HEIGHT

TOP SLAB			a_1 BAR		a_2, h BAR		h_1 BAR		WALL		v BAR		v_2, h_2 BAR		Conc.
FILL	T	SEC.	SIZE	SPC.	SIZE	SPC.	SIZE	SPC.	W	SEC.	SIZE	SPC.	SIZE	SPC.	Vol.
ft.	in.		#	in.	#	in.	#	in.	in.		#	in.	#	in.	yd.^{3} / ft.
0	12	A	7	6.5	6	12	6	12	11	B	7	7	6	12	1.737
1	12	A	7	6.5	6	12	6	12	11	B	7	7	6	12	1.737
2	12	A	7	6.5	6	12	6	12	11	B	7	7	6	12	1.737
3	12	A	7	6.5	6	12	6	12	11	B	7	7	6	12	1.737
4	12	A	7	6.5	6	12	6	12	11	B	7	7	6	12	1.737
5	12	A	7	6.5	6	12	6	12	11	B	7	7	6	12	1.737
6	12	A	7	6.5	6	12	6	12	11	B	7	7	6	12	1.737
7	12	A	7	6.5	6	12	6	12	11	B	7	7	6	12	1.737
8	13	A	7	6	6	12	6	12	11	B	7	7	6	12	1.777
9	13	A	7	6	6	12	6	12	12	B	7	7	6	12	1.857
10	14	A	7	5.5	6	12	6	12	12	C	7	6.5	6	12	1.938
11	14	A	7	5.5	6	12	6	12	12	C	7	6.5	6	12	1.938
12	14	A	7	5.5	6	12	6	12	12	C	7	6.5	6	12	1.938
13	14	A	7	5.5	6	12	6	12	12	C	7	6.5	6	12	1.938
14	14	A	7	5.5	6	12	6	12	13	C	7	6.5	6	12	2.02
15	15	A	7	5	6	12	6	12	13	C	7	6	6	12	2.06
20	17	A	8	5.5	6	12	6	12	14	C	7	5.5	6	12	2.391
25	18	A	9	6.5	6	12	6	12	15	C	7	5	6	12	2.517

12' CLEAR SPAN BY 2' CLEAR HEIGHT

TOP SLAB			a_1 BAR		a_2, h BAR		h_1 BAR		WALL		v BAR		v_2, h_2 BAR		Conc.
FILL	T	SEC.	SIZE	SPC.	SIZE	SPC.	SIZE	SPC.	W	SEC.	SIZE	SPC.	SIZE	SPC.	Vol.
ft.	in.		#	in.	#	in.	#	in.	in.		#	in.	#	in.	yd.^{3} / ft.
0	13	A	7	6	6	12	6	12	6	A	4	5.5	A	12	1.117
1	13	A	7	6	6	12	6	12	6	A	4	5.5	A	12	1.117
2	13	A	7	6	6	12	6	12	6	A	4	5.5	A	12	1.117
3	13	A	7	6	6	12	6	12	6	A	4	5.5	A	12	1.117
4	13	A	7	6	6	12	6	12	6	A	4	5.5	A	12	1.117
5	13	A	7	6	6	12	6	12	6	A	4	5.5	A	12	1.117
6	13	A	7	6	6	12	6	12	6	A	4	5.5	A	12	1.117
7	13	A	7	6	6	12	6	12	6	A	4	5.5	A	12	1.117
8	14	A	7	5.5	6	12	6	12	6	A	4	5.5	A	12	1.198
9	14	A	7	5.5	6	12	6	12	6	A	4	5.5	A	12	1.198
10	15	A	7	5	6	12	6	12	6	A	4	5.5	A	12	1.278
11	15	A	7	5	6	12	6	12	6	A	4	5.5	A	12	1.278
12	15	A	7	5	6	12	6	12	6	A	4	5.5	A	12	1.278
13	15	A	7	5	6	12	6	12	6	A	4	5.5	A	12	1.278
14	16	A	8	6	6	12	6	12	6	A	4	5.5	A	12	1.358
15	16	A	8	6	6	12	6	12	6	A	4	5.5	A	12	1.358
20	18	A	9	6.5	6	12	6	12	6	A	4	5.5	A	12	1.559
25	20	A	9	6	6	12	6	12	6	A	4	5.5	A	12	1.719

12' CLEAR SPAN BY 3' CLEAR HEIGHT

TOP SLAB			a_1 BAR		a_2, h BAR		h_1 BAR		WALL		v BAR		v_2, h_2 BAR		Conc.
FILL	T	SEC.	SIZE	SPC.	SIZE	SPC.	SIZE	SPC.	W	SEC.	SIZE	SPC.	SIZE	SPC.	Vol.
ft.	in.		#	in.	#	in.	#	in.	in.		#	in.	#	in.	yd.^{3} / ft.
0	13	A	7	6	6	12	6	12	6	A	4	5.5	4	12	1.154
1	13	A	7	6	6	12	6	12	6	A	4	5.5	4	12	1.154
2	13	A	7	6	6	12	6	12	6	A	4	5.5	4	12	1.154
3	13	A	7	6	6	12	6	12	6	A	4	5.5	4	12	1.154
4	13	A	7	6	6	12	6	12	6	A	4	5.5	4	12	1.154
5	13	A	7	6	6	12	6	12	6	A	4	5.5	4	12	1.154
6	13	A	7	6	6	12	6	12	6	A	4	5.5	4	12	1.154
7	13	A	7	6	6	12	6	12	6	A	4	5.5	4	12	1.154
8	14	A	7	5.5	6	12	6	12	6	A	4	5.5	4	12	1.235
9	14	A	7	5.5	6	12	6	12	6	A	4	5.5	4	12	1.235
10	15	A	7	5	6	12	6	12	6	A	4	5.5	4	12	1.315
11	15	A	7	5	6	12	6	12	6	A	4	5.5	4	12	1.315
12	15	A	7	5	6	12	6	12	6	A	4	5.5	4	12	1.315
13	15	A	7	5	6	12	6	12	6	A	4	5.5	4	12	1.315
14	16	A	8	6	6	12	6	12	6	A	4	5.5	4	12	1.395
15	16	A	8	6	6	12	6	12	6	A	4	5.5	4	12	1.395
20	18	A	9	6.5	6	12	6	12	6	A	4	5.5	4	12	1.596
25	20	A	9	6	6	12	6	12	6	A	4	5.5	4	12	1.756

12' CLEAR SPAN BY 4' CLEAR HEIGHT

TOP SLAB			a_1 BAR		a_2, h BAR		h_1 BAR		WALL		v BAR		v_2, h_2 BAR		Conc.
FILL	T	SEC.	SIZE	SPC.	SIZE	SPC.	SIZE	SPC.	W	SEC.	SIZE	SPC.	SIZE	SPC.	Vol.
ft.	in.		#	in.	#	in.	#	in.	in.		#	in.	#	in.	yd.^{3} / ft.
0	13	A	7	6	6	12	6	12	6	A	4	5.5	4	12	1.191
1	13	A	7	6	6	12	6	12	6	A	4	5.5	4	12	1.191
2	13	A	7	6	6	12	6	12	6	A	4	5.5	4	12	1.191
3	13	A	7	6	6	12	6	12	6	A	4	5.5	4	12	1.191
4	13	A	7	6	6	12	6	12	6	A	4	5.5	4	12	1.191
5	13	A	7	6	6	12	6	12	6	A	4	5.5	4	12	1.191
6	13	A	7	6	6	12	6	12	6	A	4	5.5	4	12	1.191
7	13	A	7	6	6	12	6	12	6	A	4	5.5	4	12	1.191
8	14	A	7	5.5	6	12	6	12	6	A	4	5.5	4	12	1.272
9	14	A	7	5.5	6	12	6	12	6	A	4	5.5	4	12	1.272
10	15	A	7	5	6	12	6	12	6	A	4	5.5	4	12	1.352
11	15	A	7	5	6	12	6	12	6	A	4	5.5	4	12	1.352
12	15	A	7	5	6	12	6	12	6	A	4	5.5	4	12	1.352
13	15	A	7	5	6	12	6	12	6	A	4	5.5	4	12	1.352
14	16	A	8	6	6	12	6	12	6	A	4	5.5	4	12	1.432
15	16	A	8	6	6	12	6	12	6	A	4	5.5	4	12	1.432
20	18	A	9	6.5	6	12	6	12	6	A	5	7	4	12	1.633
25	20	A	9	6	6	12	6	12	7	A	5	7.5	4	12	1.839

12' CLEAR SPAN BY 5' CLEAR HEIGHT

TOP SLAB			a_1 BAR		a_2, h BAR		h_1 BAR		WALL		v BAR		v_2, h_2 BAR		Conc.
FILL	T	SEC.	SIZE	SPC.	SIZE	SPC.	SIZE	SPC.	W	SEC.	SIZE	SPC.	SIZE	SPC.	Vol.
ft.	in.		#	in.	#	in.	#	in.	in.		#	in.	#	in.	yd.^{3} / ft.
0	13	A	7	6	6	12	6	12	6	A	4	5.5	4	12	1.228
1	13	A	7	6	6	12	6	12	6	A	4	5.5	4	12	1.228
2	13	A	7	6	6	12	6	12	6	A	4	5.5	4	12	1.228
3	13	A	7	6	6	12	6	12	6	A	4	5.5	4	12	1.228
4	13	A	7	6	6	12	6	12	6	A	4	5.5	4	12	1.228
5	13	A	7	6	6	12	6	12	6	A	4	5.5	4	12	1.228
6	13	A	7	6	6	12	6	12	6	A	4	5.5	4	12	1.228
7	13	A	7	6	6	12	6	12	6	A	4	5.5	4	12	1.228
8	14	A	7	5.5	6	12	6	12	6	A	5	7.5	4	12	1.309
9	14	A	7	5.5	6	12	6	12	6	A	5	7.5	4	12	1.309
10	15	A	7	5	6	12	6	12	6	A	5	7	4	12	1.389
11	15	A	7	5	6	12	6	12	6	A	5	7	4	12	1.389
12	15	A	7	5	6	12	6	12	6	A	5	7	4	12	1.389
13	15	A	7	5	6	12	6	12	7	A	5	7	4	12	1.412
14	16	A	8	6	6	12	6	12	7	A	5	7	4	12	1.493
15	16	A	8	6	6	12	6	12	7	A	5	7	4	12	1.516
20	18	A	9	6.5	6	12	6	12	7	A	5	6	4	12	1.72
25	20	A	9	6	6	12	6	12	8	A	5	6	4	12	1.934

12' CLEAR SPAN BY 6' CLEAR HEIGHT

TOP SLAB			a_1 BAR		a_2, h BAR		h_1 BAR		WALL		v BAR		v_2, h_2 BAR		Conc.
FILL	T	SEC.	SIZE	SPC.	SIZE	SPC.	SIZE	SPC.	W	SEC.	SIZE	SPC.	SIZE	SPC.	Vol.
ft.	in.		#	in.	#	in.	#	in.	in.		#	in.	#	in.	yd.^{3} / ft.
0	13	A	7	6	6	12	6	12	6	A	4	5.5	4	12	1.265
1	13	A	7	6	6	12	6	12	6	A	4	5.5	4	12	1.265
2	13	A	7	6	6	12	6	12	6	A	4	5.5	4	12	1.265
3	13	A	7	6	6	12	6	12	7	A	4	5.5	4	12	1.291
4	13	A	7	6	6	12	6	12	7	A	5	7.5	4	12	1.291
5	13	A	7	6	6	12	6	12	7	A	5	7	4	12	1.316
6	13	A	7	6	6	12	6	12	7	A	5	7	4	12	1.316
7	13	A	7	6	6	12	6	12	7	A	5	7	4	12	1.316
8	14	A	7	5.5	6	12	6	12	8	A	5	6	4	12	1.423
9	14	A	7	5.5	6	12	6	12	8	A	5	6	4	12	1.423
10	15	A	7	5	6	12	6	12	8	A	5	6	4	12	1.505
11	15	A	7	5	6	12	6	12	8	A	5	6	4	12	1.505
12	15	A	7	5	6	12	6	12	8	A	5	6	4	12	1.505
13	15	A	7	5	6	12	6	12	8	A	5	6	4	12	1.505
14	16	A	8	6	6	12	6	12	8	A	5	6	4	12	1.586
15	16	A	8	6	6	12	6	12	8	A	5	6	4	12	1.613
20	18	A	9	6.5	6	12	6	12	9	A	6	7.5	5	12	1.847
25	20	A	9	6	6	12	6	12	9	A	6	7	5	12	2.042

12' CLEAR SPAN BY 7' CLEAR HEIGHT

TOP SLAB			a_1 BAR		a_2, h BAR		h_1 BAR		WALL		v BAR		v_2, h_2 BAR		Conc.
FILL	T	SEC.	SIZE	SPC.	SIZE	SPC.	SIZE	SPC.	W	SEC.	SIZE	SPC.	SIZE	SPC.	Vol.
ft.	in.		#	in.	#	in.	#	in.	in.		#	in.	#	in.	yd.^{3} / ft.
0	13	A	7	6	6	12	6	12	7	A	5	7	4	12	1.359
1	13	A	7	6	6	12	6	12	7	A	5	7	4	12	1.359
2	13	A	7	6	6	12	6	12	7	A	5	7	4	12	1.359
3	13	A	7	6	6	12	6	12	7	A	5	7	4	12	1.359
4	13	A	7	6	6	12	6	12	8	A	5	6	4	12	1.387
5	13	A	7	6	6	12	6	12	8	A	5	6	4	12	1.387
6	13	A	7	6	6	12	6	12	8	A	5	6	4	12	1.387
7	13	A	7	6	6	12	6	12	8	A	5	6	4	12	1.387
8	14	A	7	5.5	6	12	6	12	8	A	6	7.5	5	12	1.498
9	14	A	7	5.5	6	12	6	12	8	A	6	7.5	5	12	1.498
10	15	A	7	5	6	12	6	12	9	A	6	7.5	5	12	1.61
11	15	A	7	5	6	12	6	12	9	A	6	7.5	5	12	1.61
12	15	A	7	5	6	12	6	12	9	A	6	7	5	12	1.639
13	15	A	7	5	6	12	6	12	9	A	6	7	5	12	1.639
14	16	A	8	6	6	12	6	12	9	A	6	7	5	12	1.722
15	16	A	8	6	6	12	6	12	9	A	6	7	5	12	1.722
20	18	A	9	6.5	6	12	6	12	10	A	6	6.5	5	12	1.962
25	20	A	9	6	6	12	6	12	11	A	6	6	5	12	2.194

12' CLEAR SPAN BY 8' CLEAR HEIGHT

TOP SLAB			a_1 BAR		a_2, h BAR		h_1 BAR		WALL		v BAR		v_2, h_2 BAR		Conc.
FILL	T	SEC.	SIZE	SPC.	SIZE	SPC.	SIZE	SPC.	W	SEC.	SIZE	SPC.	SIZE	SPC.	Vol.
ft.	in.		#	in.	#	in.	#	in.	in.		#	in.	#	in.	yd.^{3} / ft.
0	13	A	7	6	6	12	6	12	8	A	6	7.5	5	12	1.465
1	13	A	7	6	6	12	6	12	8	A	6	7.5	5	12	1.465
2	13	A	7	6	6	12	6	12	8	A	6	7.5	5	12	1.465
3	13	A	7	6	6	12	6	12	8	A	6	7.5	5	12	1.465
4	13	A	7	6	6	12	6	12	8	A	6	7.5	5	12	1.465
5	13	A	7	6	6	12	6	12	8	A	6	7.5	5	12	1.465
6	13	A	7	6	6	12	6	12	9	A	6	7.5	5	12	1.496
7	13	A	7	6	6	12	6	12	9	A	6	7.5	5	12	1.496
8	14	A	7	5.5	6	12	6	12	9	A	6	7	5	12	1.611
9	14	A	7	5.5	6	12	6	12	9	A	6	7	5	12	1.611
10	15	A	7	5	6	12	6	12	9	A	6	7	5	12	1.694
11	15	A	7	5	6	12	6	12	10	A	6	6.5	5	12	1.727
12	15	A	7	5	6	12	6	12	10	A	6	6.5	5	12	1.727
13	15	A	7	5	6	12	6	12	10	A	6	6.5	5	12	1.727
14	16	A	8	6	6	12	6	12	10	A	6	6.5	5	12	1.811
15	16	A	8	6	6	12	6	12	10	A	6	6	5	12	1.844
20	18	A	9	6.5	6	12	6	12	11	A	7	7	6	12	2.089
25	20	A	9	6	6	12	6	12	12	A	7	7	6	12	2.329

12' CLEAR SPAN BY 9' CLEAR HEIGHT

TOP SLAB			a_1 BAR		a_2, h BAR		h_1 BAR		WALL		v BAR		v_2, h_2 BAR		Conc.
FILL	T	SEC.	SIZE	SPC.	SIZE	SPC.	SIZE	SPC.	W	SEC.	SIZE	SPC.	SIZE	SPC.	Vol.
ft.	in.		#	in.	#	in.	#	in.	in.		#	in.	#	in.	yd.^{3} / ft.
0	13	A	7	6	6	12	6	12	9	B	6	7	5	12	1.583
1	13	A	7	6	6	12	6	12	9	B	6	7	5	12	1.583
2	13	A	7	6	6	12	6	12	9	B	6	7	5	12	1.583
3	13	A	7	6	6	12	6	12	9	B	6	7	5	12	1.583
4	13	A	7	6	6	12	6	12	9	B	6	7	5	12	1.583
5	13	A	7	6	6	12	6	12	9	B	6	7	5	12	1.583
6	13	A	7	6	6	12	6	12	9	B	6	7	5	12	1.583
7	13	A	7	6	6	12	6	12	10	B	6	6.5	5	12	1.618
8	14	A	7	5.5	6	12	6	12	10	B	6	6.5	5	12	1.702
9	14	A	7	5.5	6	12	6	12	10	B	6	6.5	5	12	1.702
10	15	A	7	5	6	12	6	12	10	B	6	6	5	12	1.821
11	15	A	7	5	6	12	6	12	10	B	6	6	5	12	1.821
12	15	A	7	5	6	12	6	12	10	B	6	6	5	12	1.821
13	15	A	7	5	6	12	6	12	10	B	6	6	5	12	1.821
14	16	A	8	6	6	12	6	12	11	B	7	7	6	12	1.941
15	16	A	8	6	6	12	6	12	11	B	7	7	6	12	1.941
20	18	A	9	6.5	6	12	6	12	12	C	7	7	6	12	2.265
25	20	A	9	6	6	12	6	12	12	C	7	6	6	12	2.438

12' CLEAR SPAN BY 10' CLEAR HEIGHT

TOP SLAB			a_1 BAR		a_2, h BAR		h_1 BAR		WALL		v BAR		v_2, h_2 BAR		Conc.
FILL	T	SEC.	SIZE	SPC.	SIZE	SPC.	SIZE	SPC.	W	SEC.	SIZE	SPC.	SIZE	SPC.	Vol.
ft.	in.		#	in.	#	in.	#	in.	in.		#	in.	#	in.	yd.^{3} / ft.
0	13	A	7	6	6	12	6	12	10	B	6	6	5	12	1.714
1	13	A	7	6	6	12	6	12	10	B	6	6	5	12	1.714
2	13	A	7	6	6	12	6	12	10	B	6	6	5	12	1.714
3	13	A	7	6	6	12	6	12	10	B	6	6	5	12	1.714
4	13	A	7	6	6	12	6	12	10	B	6	6	5	12	1.714
5	13	A	7	6	6	12	6	12	10	B	6	6	5	12	1.714
6	13	A	7	6	6	12	6	12	10	B	6	6	5	12	1.714
7	13	A	7	6	6	12	6	12	10	B	6	6	5	12	1.714
8	14	A	7	5.5	6	12	6	12	10	B	6	6	5	12	1.798
9	14	A	7	5.5	6	12	6	12	11	B	6	6	5	12	1.836
10	15	A	7	5	6	12	6	12	11	B	7	7	6	12	1.921
11	15	A	7	5	6	12	6	12	11	B	7	7	6	12	1.96
12	15	A	7	5	6	12	6	12	11	B	7	7	6	12	1.96
13	15	A	7	5	6	12	6	12	11	B	7	7	6	12	1.96
14	16	A	8	6	6	12	6	12	12	B	7	7	6	12	2.084
15	16	A	8	6	6	12	6	12	12	C	7	6.5	6	12	2.123
20	18	A	9	6.5	6	12	6	12	13	C	7	6	6	12	2.38
25	20	A	9	6	6	12	6	12	14	C	7	5.5	6	12	2.637

12' CLEAR SPAN BY 11' CLEAR HEIGHT

TOP SLAB			a_1 BAR		a_2, h BAR		h_1 BAR		WALL		v BAR		v_2, h_2 BAR		Conc.
FILL	T	SEC.	SIZE	SPC.	SIZE	SPC.	SIZE	SPC.	W	SEC.	SIZE	SPC.	SIZE	SPC.	Vol.
ft.	in.		#	in.	#	in.	#	in.	in.		#	in.	#	in.	yd.^{3} / ft.
0	13	A	7	6	6	12	6	12	11	B	7	7	6	12	1.857
1	13	A	7	6	6	12	6	12	11	B	7	7	6	12	1.857
2	13	A	7	6	6	12	6	12	11	B	7	7	6	12	1.857
3	13	A	7	6	6	12	6	12	11	B	7	7	6	12	1.857
4	13	A	7	6	6	12	6	12	11	B	7	7	6	12	1.857
5	13	A	7	6	6	12	6	12	11	B	7	7	6	12	1.857
6	13	A	7	6	6	12	6	12	11	B	7	7	6	12	1.857
7	13	A	7	6	6	12	6	12	11	B	7	7	6	12	1.857
8	14	A	7	5.5	6	12	6	12	11	B	7	7	6	12	1.942
9	14	A	7	5.5	6	12	6	12	12	B	7	7	6	12	1.984
10	15	A	7	5	6	12	6	12	12	C	7	6.5	6	12	2.111
11	15	A	7	5	6	12	6	12	12	C	7	6.5	6	12	2.111
12	15	A	7	5	6	12	6	12	12	C	7	6.5	6	12	2.111
13	15	A	7	5	6	12	6	12	12	C	7	6.5	6	12	2.111
14	16	A	8	6	6	12	6	12	13	C	7	6.5	6	12	2.24
15	16	A	8	6	6	12	6	12	13	C	7	6	6	12	2.24
20	18	A	9	6.5	6	12	6	12	14	C	7	5.5	6	12	2.587
25	20	A	9	6	6	12	6	12	15	C	7	5	6	12	2.809

12' CLEAR SPAN BY 12' CLEAR HEIGHT															
TOP SLAB			a_1 BAR		a_2, h BAR		h_1 BAR		WALL		v BAR		v_2, h_2 BAR		Conc.
FILL	T	SEC.	SIZE	SPC.	SIZE	SPC.	SIZE	SPC.	W	SEC.	SIZE	SPC.	SIZE	SPC.	Vol.
ft.	in.		#	in.	#	in.	#	in.	in.		#	in.	#	in.	yd.^{3} / ft.
0	13	A	7	6	6	12	6	12	12	C	7	6.5	6	12	2.012
1	13	A	7	6	6	12	6	12	12	C	7	6.5	6	12	2.012
2	13	A	7	6	6	12	6	12	12	C	7	6.5	6	12	2.012
3	13	A	7	6	6	12	6	12	12	C	7	6.5	6	12	2.012
4	13	A	7	6	6	12	6	12	12	C	7	6.5	6	12	2.012
5	13	A	7	6	6	12	6	12	12	C	7	6.5	6	12	2.012
6	13	A	7	6	6	12	6	12	12	C	7	6.5	6	12	2.012
7	13	A	7	6	6	12	6	12	12	C	7	6.5	6	12	2.012
8	14	A	7	5.5	6	12	6	12	12	C	7	6.5	6	12	2.099
9	14	A	7	5.5	6	12	6	12	12	C	7	6.5	6	12	2.099
10	15	A	7	5	6	12	6	12	13	C	7	6	6	12	2.23
11	15	A	7	5	6	12	6	12	13	C	7	6	6	12	2.23
12	15	A	7	5	6	12	6	12	13	C	7	6	6	12	2.23
13	15	A	7	5	6	12	6	12	13	C	7	5.5	6	12	2.23
14	16	A	8	6	6	12	6	12	13	C	7	5.5	6	12	2.362
15	16	A	8	6	6	12	6	12	14	C	7	5.5	6	12	2.407
20	18	A	9	6.5	6	12	6	12	15	C	7	5	6	12	2.767
25	20	A	9	6	6	12	6	12	16	C	8	6	6	12	3.041

Section 4 Headwalls and Wingwalls

4.1 General

The focus of this section is end treatments for cast-in-place concrete box culverts. Standard end sections for precast concrete box culverts are available on base sheets and are not discussed in this section.

Except as noted, all loads, load combinations, and load modifiers were calculated in accordance with Section 3 of the *Culvert Manual*.

4.1.1 Loads

4.1.1.1 Live Loads

No live loads were included in the development of the design charts and tables in this section. The charts and tables are not applicable for wingwalls built parallel to the roadway with traffic lanes within a distance of one-half the wall design height. If this case occurs, a separate design is required, using live load surcharge pressure according to Article 3.11.6.4 of the *AASHTO LRFD Bridge Design Specifications*.

The wingwalls in this section are not designed to withstand vehicular impact loading. If a railing or parapet is required to be placed on a wingwall, a separate design is required and the standard designs in this chapter shall not be used.

4.1.1.2 Lateral Earth Pressure Loads

For horizontal cantilever and two-way cantilever L-type walls, at-rest earth pressure was assumed. For T-type walls, and permanent steel sheet piling walls, active earth pressure was assumed.

Table 3.11.5.5-1 of the *AASHTO LRFD Bridge Design Specifications* gives values of at-rest and active earth pressures for various types of soil, assuming either zero (flat) backslope or 25 degree backslope. The values in AASHTO are based on an angle of internal friction of 30

degrees. To accommodate a smaller angle of internal friction (28 degrees), and a larger backslope variation (from zero to 26.56 degrees, which corresponds to a 1:2 (V:H) backslope), values from Table 3.11.5.5-1 of the *AASHTO LRFD Bridge Design Specifications* were interpolated and extrapolated to create the following Table 4.1.1.2-1. This figure shows earth pressures in the horizontal and vertical directions for both the active and at-rest state for all applicable backslope angles. The backslope angle shall be measured perpendicular to the face of the wall, and calculated using the procedure shown in Figure 4.1.1.2-2.

	HORIZONTAL CANTILEVER or TWO-WAY CANTILEVER L-TYPE		SHEET PILING or VERTICAL CANTILEVER T-TYPE	
ANGLE OF BACKFILL	P_H (psf)	P_V (psf)	P_H (psf)	P_V (psf)
0	60	0	43	0
2	60	2	43	2
4	61	4	44	3
6	62	7	44	5
8	63	9	44	6
10	63	11	45	8
12	64	14	46	10
14	64	16	47	12
16	65	19	48	14
18	65	21	50	16
20	66	24	52	19
22	67	27	55	22
24	68	30	59	26
26	70	34	66	32
26.56	71	35	70	35

Table 4.1.1.2-1

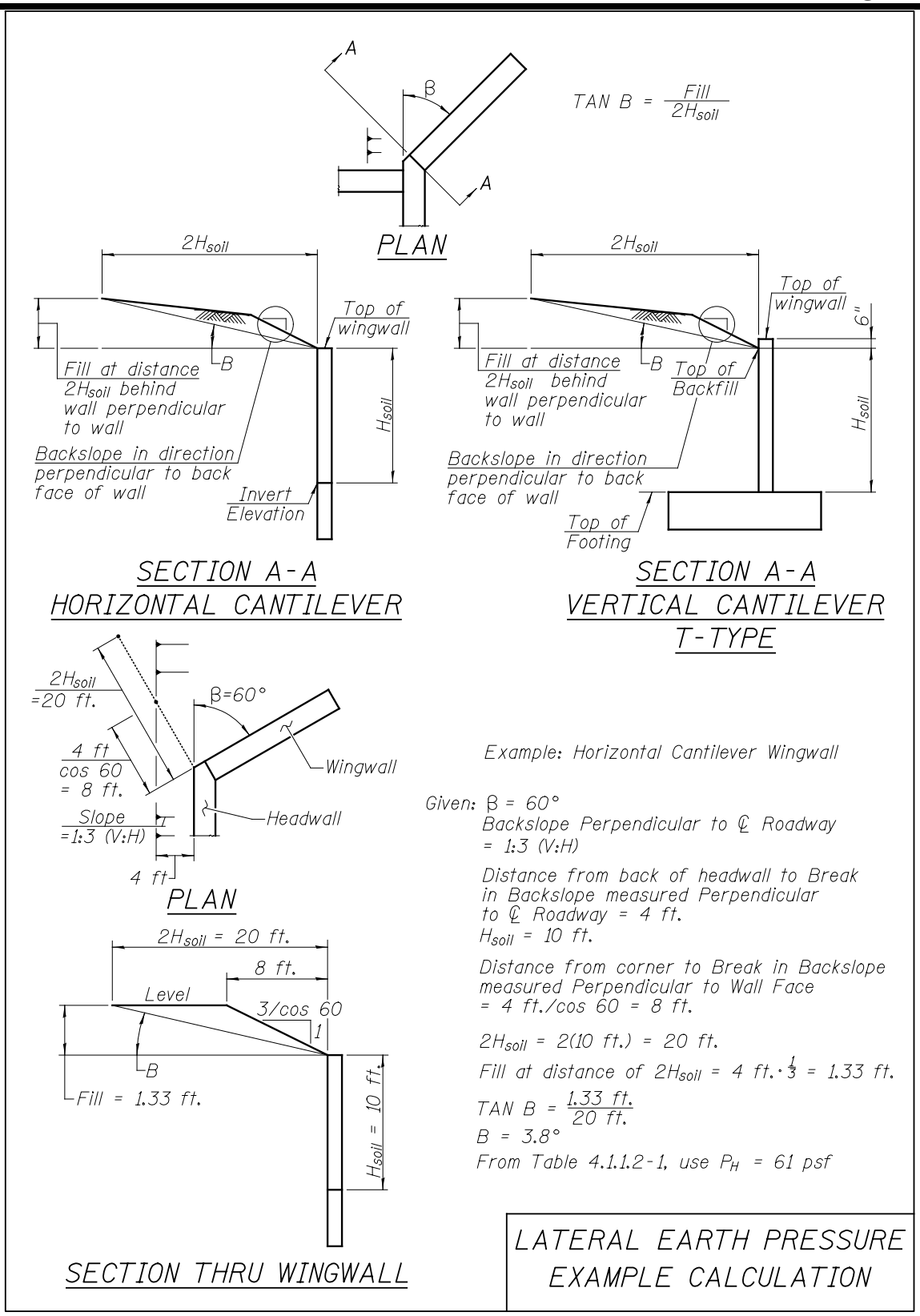

Figure 4.1.1.2-2

4.1.2 Types of Wingwalls and Applications

For most cast-in-place concrete box culverts, horizontal cantilever wingwalls are the most economical and preferred wall type.

Horizontal cantilever wingwalls are limited to 16 feet in length. If longer walls are required, two-way L-type cantilever wingwalls may be used for lengths of up to 30 feet. For longer walls, another alternative is to use a horizontal cantilever wall for the first 16 feet, then the remainder of the length may be made up using a different type of wall such as permanent steel sheet piling or soldier pile.

For culverts with large skews and/or high rises, cast-in-place concrete walls may become very large and cost-prohibitive. In these cases, sheet pile wingwalls or soldier pile wingwalls may become an economical alternative.

Weak soils or high rock elevations may preclude the use of certain types of walls. The design engineer should verify that the wall type used is consistent with the soil conditions prior to design.

4.1.3 Wingwall Geometry

4.1.3.1 Wingwall Length

The length of the wingwall shall be determined from the chart shown in Figure 4.1.3.1-2 using the parameters shown in Figure 4.1.3.1-1. The wingwall length shall be rounded to the nearest three inches.

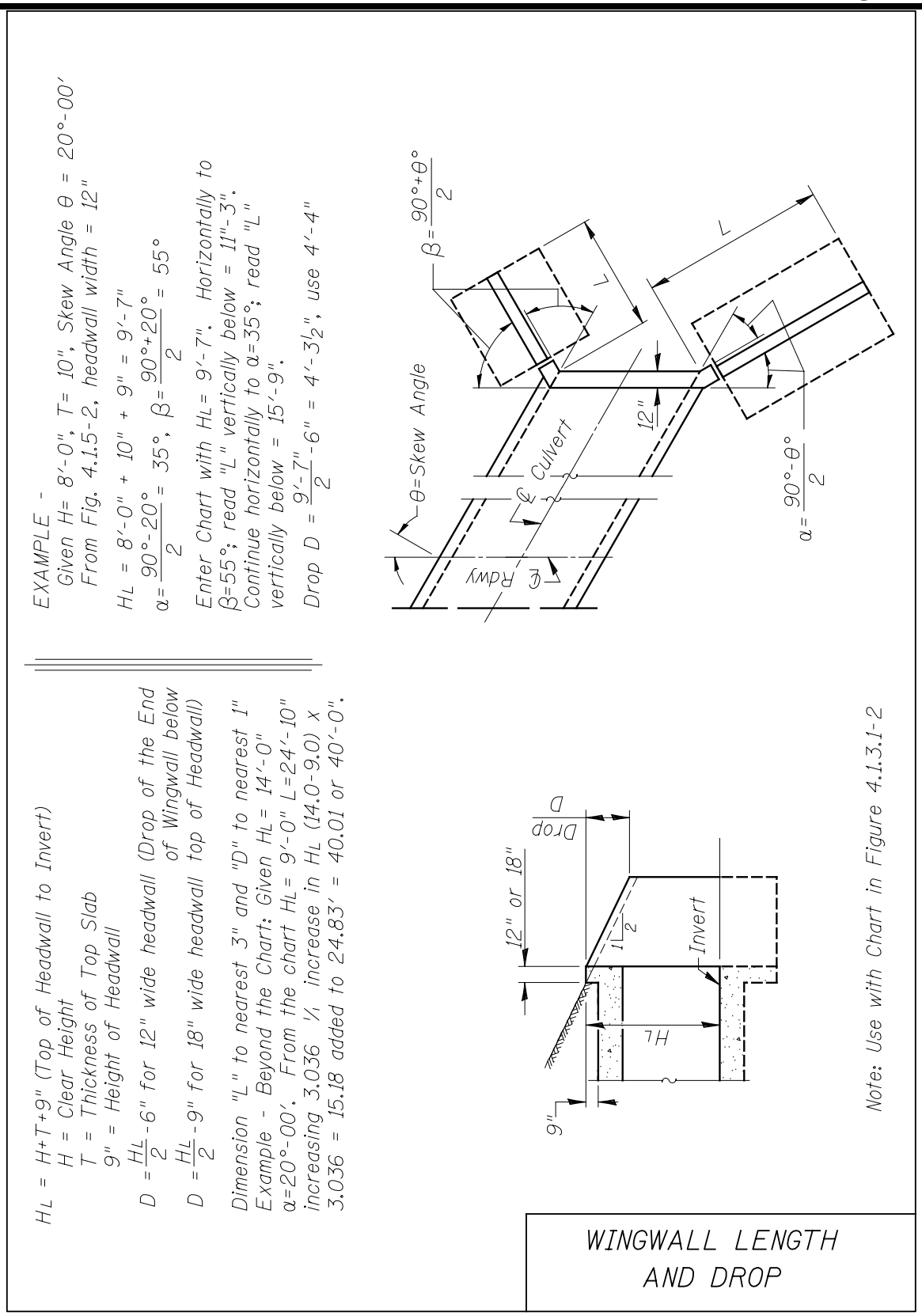

Figure 4.1.3.1-1

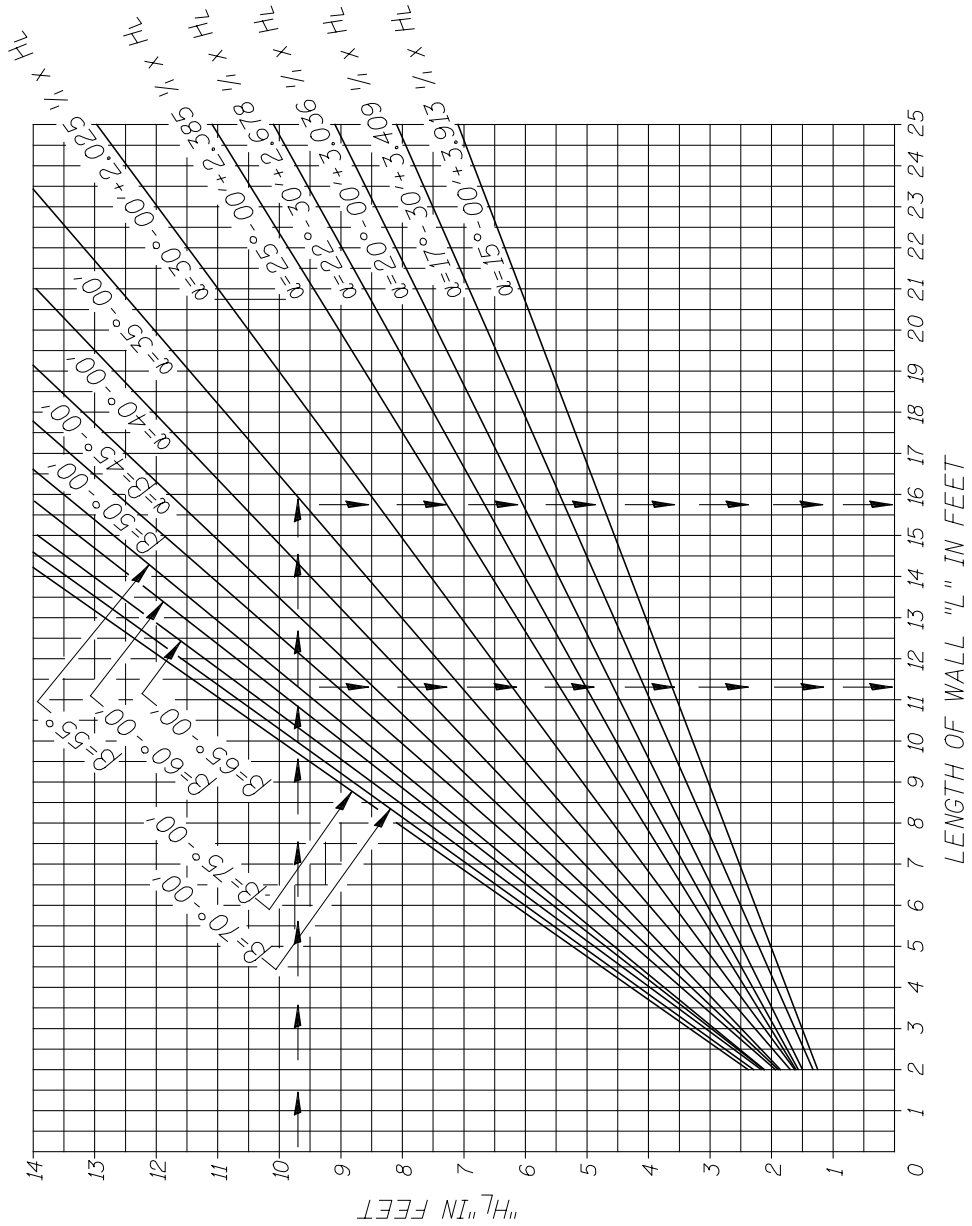

WINGWALL LENGTH CHART
HORIZONTAL AND VERTICAL
CANTILEVER 1:2 (V:H) SLOPE

Figure 4.1.3.1-2

4.1.3.2 Wingwall and Footing Thicknesses

The minimum wall thickness of the horizontal cantilever wingwalls is eight inches, and increases in increments of one inch.

The minimum wall and footing thickesses for two-way L-type cantilever wingwalls is six inches and increases in increments of one inch.

The minimum stem thickness of the T-type vertical cantilever wingwall is 10 inches and increases in increments of one inch up to 12 inches.

For two-way cantilever L-type and vertical cantilever T-type, no batter is provided when the stem thickness is equal to or less than 12 inches. The maximum thickness at the top of the stem is 12 inches. For stems requiring thickness greater than 12 inches at the base, the stem base thickness is increased in increments of one inch and batter is provided to the back face (the face in contact with the earth), while maintaining constant vertical slope.

The minimum spread footing thickness of the T-type cantilever wingwall is dependent upon the required development length for epoxy-coated hooked reinforcement, of the size required for strength.

4.1.3.3 Wingwall Design Heights

The horizontal cantilever wingwall design height is taken as the difference between the highest top of wingwall elevation and the invert elevation.

The two-way L-type cantilever wingwall design height is taken as the difference between six inches below the top of wall elevation and the top of footing elevation.

The vertical cantilever T-type design height is taken as the difference between six inches below the highest wall elevation and the bottom of footing elevation.

Sample calculations for design height for each of these types of walls are shown in Sections 4.2.3, 4.3.3, and 4.4.3, respectively.

4.1.4 Reinforcement Design and Details

The size and spacing of all main reinforcement for wingwalls is given in the tables, with the exception of the horizontal cantilever wingwall reinforcement, which is given in a chart. Unless otherwise shown in the table, all reinforcement lengths shall be given on the drawings to the nearest inch. The minimum bar lap length shall be as specified in Section 5 and based on the larger bar size.

Vertical reinforcement in wall stems for walls with differing heights shall utilize field cutting diagrams.

When possible, the maximum reinforcement ratio (ρ) used in the design of the wingwalls is limited to approximately $0.375\rho_b$, where ρ_b is the balanced reinforcement ratio. For some vertical cantilever walls, this limitation was raised to $0.6\rho_b$ to avoid excessively thick walls.

4.1.5 Headwalls

The width of the headwall shall be 12 inches for all culverts with skews up to and including 30 degrees, and 18 inches for all culverts with skews greater than 30 degrees. Standard headwall designs are given in Figure 4.1.5-1. Size #4 stirrup reinforcement shall be provided at 12 inch centers when the span length (taken along the skew) is less than or equal to 20 feet. Size #5 stirrup reinforcement shall be provided at 12 inch centers when the span length (taken along the skew) is 20 feet in length or greater.

For design assumptions, the headwall is assumed to act as an edge beam. For culverts with fills less than two feet, the headwall is reinforced to support additional moment due to live load according to Article 4.6.2.10 of the *AASHTO LRFD Bridge Design Specifications*. For fills two feet or more, the headwall is reinforced to support a live load distributed through the fill according to Article 3.6.1.2.6 of the *AASHTO LRFD Bridge Design Specifications*. For skewed culverts, the edge beam is reinforced to support the half of the slab, including the portion of fill above the slab, that is unsupported as a result of the skew.

The headwall corner dimensions shown as X, X_1, and X_2 shown in Figure 4.1.5-2 are listed in tables shown in Figures 4.1.5-3 and 4.1.5-4. Figure 4.1.5-5 shows an example for calculating headwall corner dimensions.

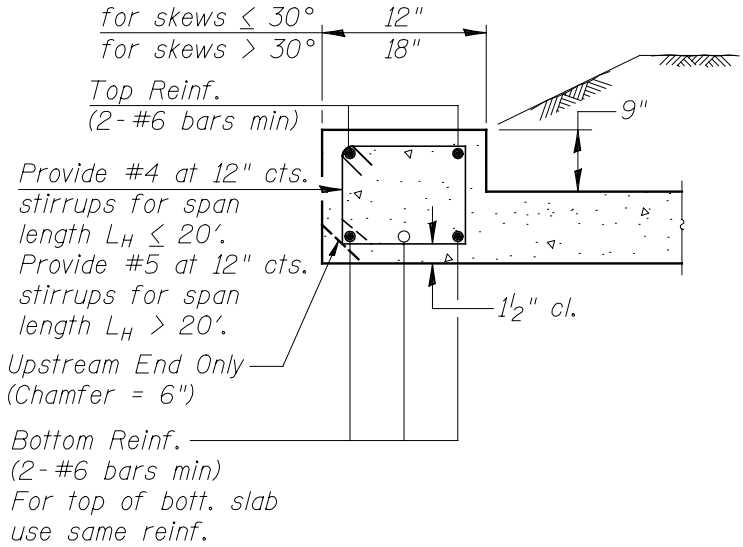

SECTION THRU HEADWALL

Single Box			Multiple Box		
Span Length (L_H) Clear Span/cos skew	Bottom Reinf.	Top Reinf.	Span Length (L_H) Clear Span/cos skew	Bottom Reinf.	Top Reinf.
≤ 10'-3"	2-#6	2-#6	≤ 10'-0"	2-#6	2-#6
10'-3" < L_H ≤ 13'-10"	3-#6	2-#6	10'-0" < L_H ≤ 13'-10"	3-#6	3-#6
13'-10" < L_H ≤ 17'-0"	3-#8	2-#6	13'-10" < L_H ≤ 17'-0"	3-#7	3-#8
17'-0" < L_H ≤ 20'-0"	3-#9	2-#6	17'-0" < L_H ≤ 20'-0"	3-#8	3-#9
L_H > 20'-0"	4-#9	2-#6	L_H > 20'-0"	3-#9	4-#9

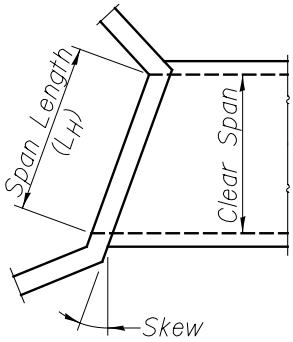

PLAN (SINGLE BOX)

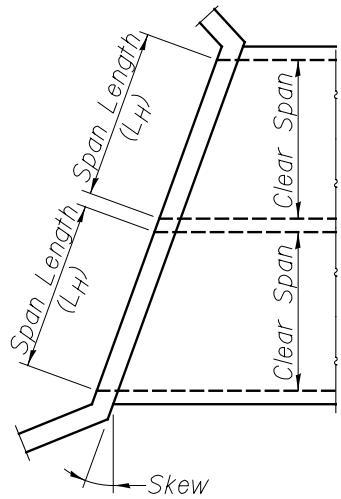

PLAN (MULTIPLE BOX)

HEADWALL REINFORCEMENT

Figure 4.1.5-1

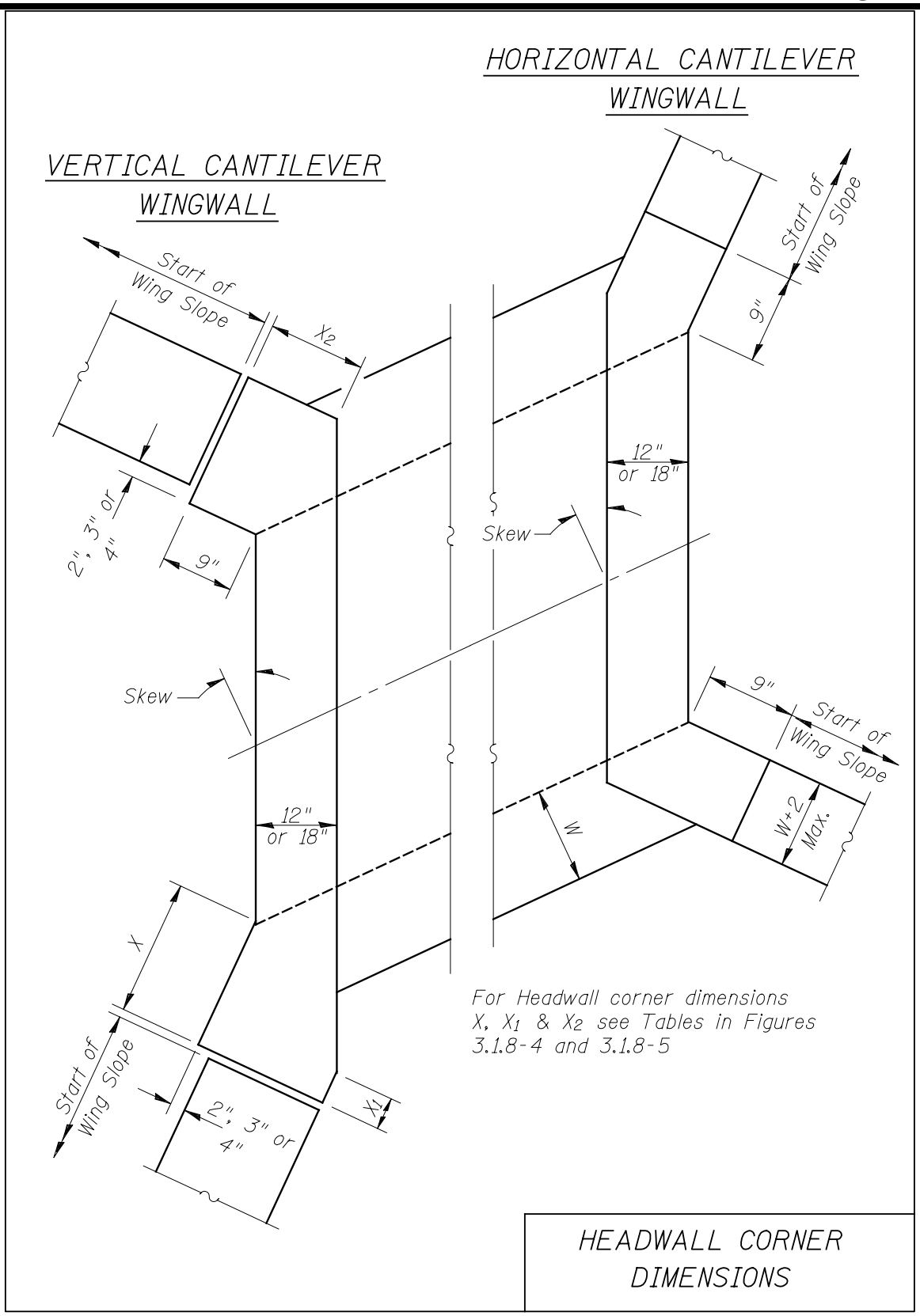
HORIZONTAL CANTILEVER WINGWALL
VERTICAL CANTILEVER WINGWALL
Start of Wing Slope
X2
9"
12" or 18"
2", 3" or 4"
Skew
W
W+2 Max.
X
X1
For Headwall corner dimensions X, X1 & X2 see Tables in Figures 3.1.8-4 and 3.1.8-5
HEADWALL CORNER DIMENSIONS

Figure 4.1.5-2

HEADWALL CORNER DIMENSIONS

12" Headwall

Skew	8" Wing - 12" Hdwl. - 4" Offset			9" Wing - 12" Hdwl. - 3" Offset			10" Wing - 12" Hdwl. - 2" Offset			10½" Wing - 12" Hdwl. - 2" Offset			Skew
	X	X_1	X_2	X	X_1	X_2	X	X_1	X_2	X	X_1	X_2	
0°	9"	1'-2"	1'-2"	9"	1'-2"	1'-2"	9"	1'-2"	1'-2"	9"	1'-1½"	1'-1½"	0°
5°	9"	1'-1 5/8"	1'-2¼"	9"	1'-1 5/8"	1'-2¼"	9"	1'-1 5/8"	1'-2¼"	9"	1'-1⅛"	1'-1 7/8"	5°
10°	9"	1'-1 3/8"	1'-2 5/8"	9"	1'-1 3/8"	1'-2 5/8"	9"	1'-1 3/8"	1'-2 5/8"	9"	1'-0¾"	1'-2⅛"	10°
15°	9"	1'-1⅛"	1'-2 7/8"	9"	1'-1⅛"	1'-2 7/8"	9"	1'-1⅛"	1'-2 7/8"	9"	1'-0 3/8"	1'-2½"	15°
20°	9"	1'-0¾"	1'-3¼"	9"	1'-0¾"	1'-3¼"	9"	1'-0¾"	1'-3¼"	9"	1'-0⅛"	1'-2 7/8"	20°
25°	9"	1'-0½"	1'-3 5/8"	9"	1'-0½"	1'-3 5/8"	9"	1'-0½"	1'-3 5/8"	9"	11¾"	1'-3¼"	25°
30°	9"	1'-0¼"	1'-3 7/8"	9"	1'-0¼"	1'-3 7/8"	9"	1'-0¼"	1'-3 7/8"	9"	11 3/8"	1'-3 5/8"	30°
35°	9"	11 7/8"	1'-4¼"	9"	11 7/8"	1'-4¼"	9"	11 7/8"	1'-4¼"	9"	11"	1'-4"	35°
40°	9"	11 5/8"	1'-4 5/8"	9"	11 5/8"	1'-4 5/8"	9"	11 5/8"	1'-4 5/8"	9"	10 5/8"	1'-4 3/8"	40°
45°	9"	11 3/8"	1'-5"	9"	11 3/8"	1'-5"	9"	11 3/8"	1'-5"	9"	10⅛"	1'-4¾"	45°
50°	9"	11⅛"	1'-5 3/8"	9"	11⅛"	1'-5 3/8"	9"	11⅛"	1'-5 3/8"	9"	9¾"	1'-5¼"	50°
55°	9"	10 7/8"	1'-5¾"	9"	10 7/8"	1'-5¾"	9"	10 7/8"	1'-5¾"	9"	9¼"	1'-5 5/8"	55°
60°	9"	10 5/8"	1'-6¼"	9"	10 5/8"	1'-6¼"	9"	10 5/8"	1'-6¼"	9"	8¾"	1'-6⅛"	60°
65°	9"	10 3/8"	1'-6 5/8"	9"	10 3/8"	1'-6 5/8"	9"	10 3/8"	1'-6 5/8"	9"	8"	1'-6½"	65°

X = 9" min.
X_1 = 4" min.

Figure 4.1.5-3

HEADWALL CORNER DIMENSIONS

Skew	11" Wing - 12" Hdwl - 2" Offset			11½" Wing - 12" Hdwl - 2" Offset			12" Wing - 12" Hdwl - 2" Offset			Skew
	X	X_1	X_2	X	X_1	X_2	X	X_1	X_2	
0°	9"	1'-1"	1'-1"	9"	1'-0½"	1'-0½"	9"	1'-0"	1'-0"	0°
5°	9"	1'-0⅝"	1'-1⅜"	9"	1'-0"	1'-0⅞"	9"	11½"	1'-0½"	5°
10°	9"	1'-0⅛"	1'-1¾"	9"	11⅝"	1'-1⅜"	9"	11"	1'-0⅞"	10°
15°	9"	11¾"	1'-2⅛"	9"	11⅛"	1'-1¾"	9"	10½"	1'-1⅜"	15°
20°	9"	11⅜"	1'-2½"	9"	10⅝"	1'-2¼"	9"	9⅞"	1'-1⅞"	20°
25°	9"	10⅞"	1'-3"	9"	10⅛"	1'-2⅝"	9"	9⅜"	1'-2¼"	25°
30°	9"	10½"	1'-3⅜"	9"	9⅝"	1'-3"	9"	8¾"	1'-2¾"	30°
35°	9"	10"	1'-3¾"	9"	9"	1'-3½"	9"	8⅛"	1'-3¼"	35°
40°	9"	9½"	1'-4⅛"	9"	8½"	1'-4"	9"	7⅜"	1'-3¾"	40°
45°	9"	9"	1'-4⅝"	9"	7¾"	1'-4⅜"	9"	6½"	1'- 4¼"	45°
50°	9"	8⅜"	1'-5"	9"	7"	1'-4⅞"	9"	5⅝"	1'-4⅝"	50°
55°	9"	7⅝"	1'-5½"	9"	6⅛"	1'-5⅜"	9"	4½"	1'-5¼"	55°
60°	9"	6⅞"	1'-6"	9"	5"	1'-5¾"	9⅞"	4"	1'-5⅝"	60°
65°	9"	5¾"	1'-6⅜"	9½"	4"	1'-6¼"	11¾"	4"	1'-6¼"	65°

X = 9" min.
X_1 = 4" min.

Figure 4.1.5-4

DESIGN EXAMPLE

(Typical calculation of headwall corner dimensions)

For condition of 4" offset.

$$X = 9''$$

$$X_1 = 9'' + \frac{12''}{\sin\left(\frac{90°-\theta}{2}\right)} - \frac{T+4''}{\tan\left(\frac{90°-\theta}{2}\right)} \geqslant 4''$$

$$X_2 = 9'' + \frac{12''}{\sin\left(\frac{90°+\theta}{2}\right)} - \frac{T+4''}{\tan\left(\frac{90°+\theta}{2}\right)}$$

For condition where X_1 is computed to be less than or equal to 4", use the following equations:

Set $X_1 = 4''$, and find X as follows:

$$X = 4'' + \frac{T+4''}{\tan\left(\frac{90°-\theta}{2}\right)} - \frac{12''}{\sin\left(\frac{90°-\theta}{2}\right)}$$

$$X_2 = 9'' + \frac{12''}{\sin\left(\frac{90°+\theta}{2}\right)} - \frac{T+4''}{\tan\left(\frac{90°+\theta}{2}\right)}$$

Given: (Skew Angle) $\theta = 30°$, (Wingwall Thickness) $T = 8''$

$$X = 9''$$

$$X_1 = 9'' + \frac{12''}{\sin\left(\frac{90°-30°}{2}\right)} - \frac{8''+4''}{\tan\left(\frac{90°-30°}{2}\right)} = 12.215'' \quad \text{Use } 12\tfrac{1}{4}''$$

$$X_2 = 9'' + \frac{12''}{\sin\left(\frac{90°+30°}{2}\right)} - \frac{8''+4''}{\tan\left(\frac{90°+30°}{2}\right)} = 15.927'' \quad \text{Use } 15\tfrac{7}{8}''$$

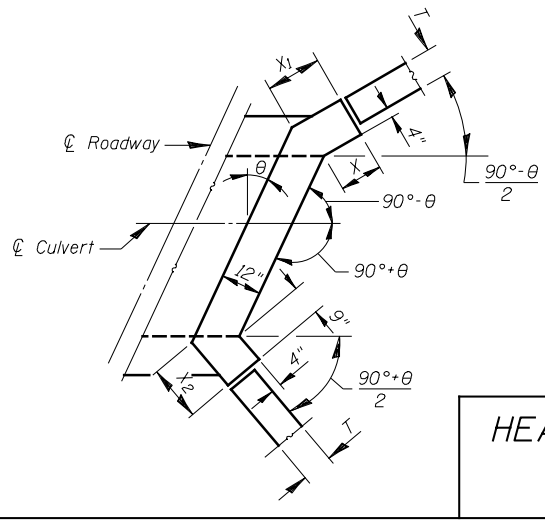

HEADWALL DIMENSIONS EXAMPLE

Figure 4.1.5-5

4.2 Horizontal Cantilever

Horizontal cantilever wingwalls shall be used if the wingwall is less than or equal to 16 feet in length and the wingwall location can be adequately dewatered.

4.2.1 Details

Details for horizontal cantilever wingwalls are given in Figure 4.2.1-1. The design length of the wingwall, L, is calculated using the procedure and figures found in Section 4.1.3.1.

For all culverts with horizontal cantilever wingwalls, a portion of the barrel equal to the minimum of half the wingwall length or six (6) feet shall be poured monolithically with the wingwalls.

If the wingwall thickness exceeds the barrel sidewall thickness by more than two inches, the portion of the barrel wall which must be cast monolithically with the wingwall shall be thickened such that the sidewall thickness is equal to the wingwall thickness. See Figure 4.2.2-1.

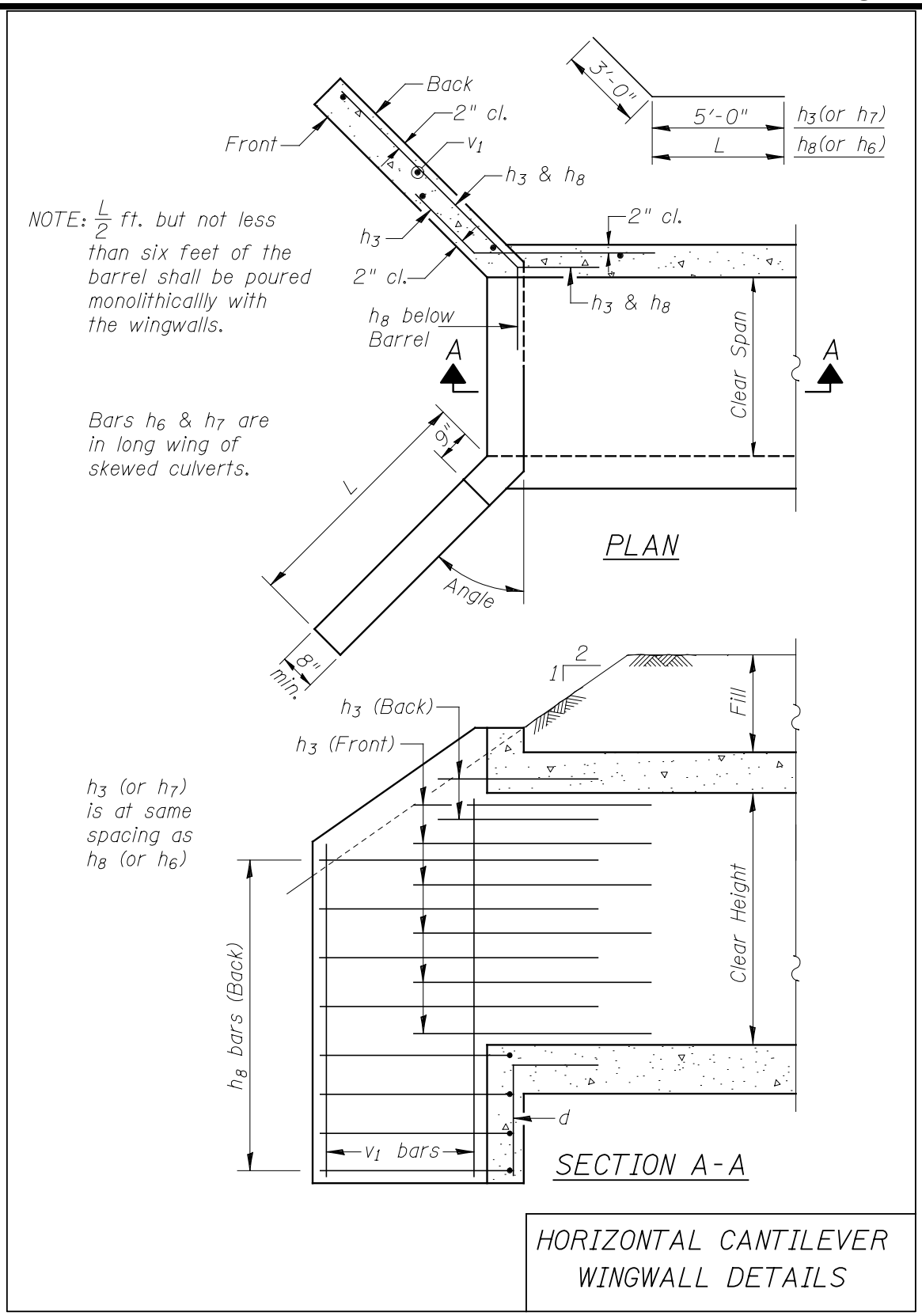
Back
2" cl.
Front
v_1
h_3 & h_8
3'-0"
5'-0"
L
h_3(or h_7)
h_8(or h_6)
NOTE: $\frac{L}{2}$ ft. but not less than six feet of the barrel shall be poured monolithicallly with the wingwalls.
h_3
2" cl.
2" cl.
h_3 & h_8
h_8 below Barrel
A
A
Clear Span
Bars h_6 & h_7 are in long wing of skewed culverts.
6"
L
PLAN
Angle
8" min.
2
1
h_3 (Back)
h_3 (Front)
Fill
h_3 (or h_7) is at same spacing as h_8 (or h_6)
Clear Height
h_8 bars (Back)
d
v_1 bars
SECTION A-A
HORIZONTAL CANTILEVER WINGWALL DETAILS

Figure 4.2.1-1

4.2.2 Design Chart

The thickness of the wingwall and required reinforcement shall be obtained from the horizontal wingwall design chart in Figure 4.2.2-3. Use of this chart requires calculation of a loading constant "C," which is based upon the wingwall geometry and the angle of backslope. The procedure for the calculation of "C" is given in Figure 4.2.2-2. Calculation of P_A and P_B requires calculation of the effective backslope angle using the procedure in Section 4.1.1.2. A detailed example of all of these calculations is given in Section 4.2.3.

The termination of the wall thickness curves at the upper end of the chart reflect the use of a maximum reinforcement ratio of one half of $0.75\rho_b$.

The area of steel required per foot of wall height will determine the h_6 or h_8 bar spacing and size. The values for area of steel on the chart are based on assumed bar sizes, and therefore the reinforcement sizes shall be as specified in the table below. The minimum flexural reinforcement shall be #4 bars spaced at 12 inch centers. The h_3 and h_7 bars shall be the same size as the h_6 and h_8 bars, respectively.

Area of Reinforcement	Bar Size
0.2 - 0.31	#4
0.31 - 0.44	#5
0.44 - 0.60	#6
0.60 - 0.79	#7
0.79 - 1.00	#8
> 1.00	#9

Table 4.2.2-1

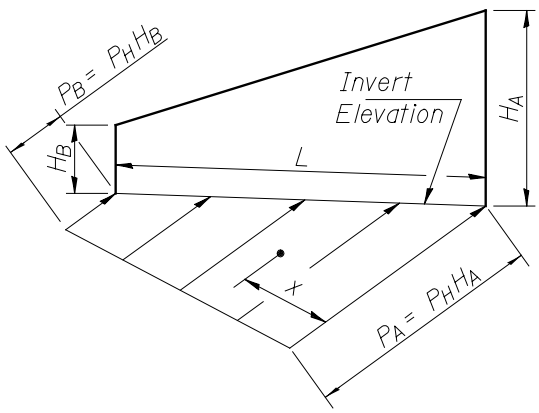

See Table 4.1.1.2-1 for values of P_H

F = Force on design strip = $L\left(\frac{P_A + P_B}{2}\right)$

x = distance to resultant of force

$x = \frac{L}{3}\left(\frac{P_A + 2P_B}{P_A + P_B}\right)$

Factored moment $(M_{1-1}) = 1.35(F)(x)$

$= \frac{1.35L^2}{6}(P_A + 2P_B)$

Letting $C = \frac{1.35}{6}(P_A + 2P_B)$

Then $M_{1-1} = CL^2$

BACK OF WING ELEVATION

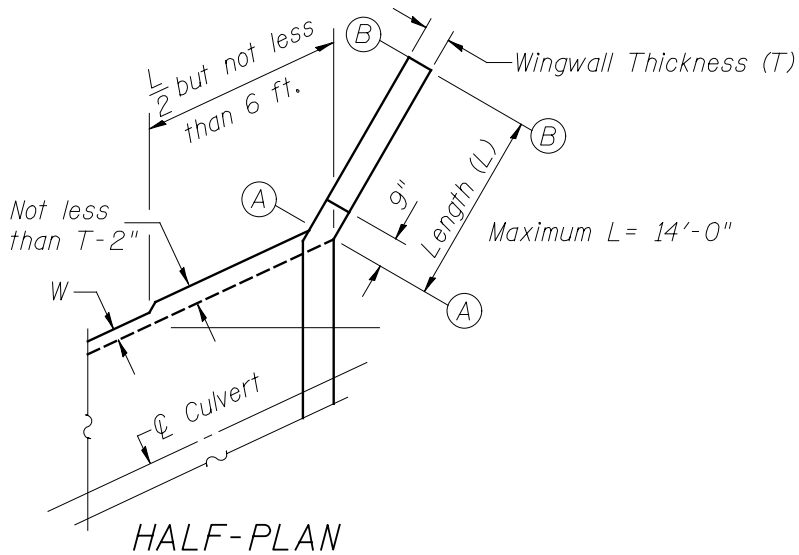

HALF-PLAN

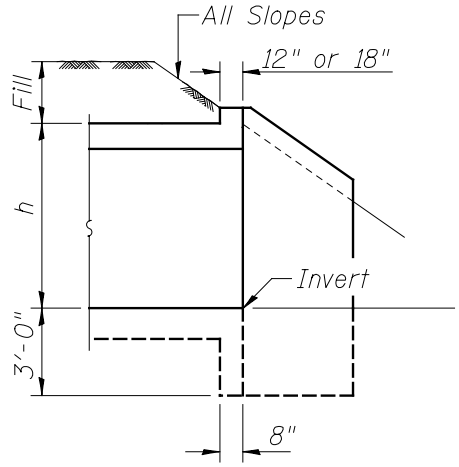

SECTION

Area of Reinforcement (sq. in.) is given per foot of wall height. Use same size and spacing of reinforcement bars thru-out full height of wall.

HORIZONTAL CANTILEVER WINGWALL DESIGN

Figure 4.2.2-2

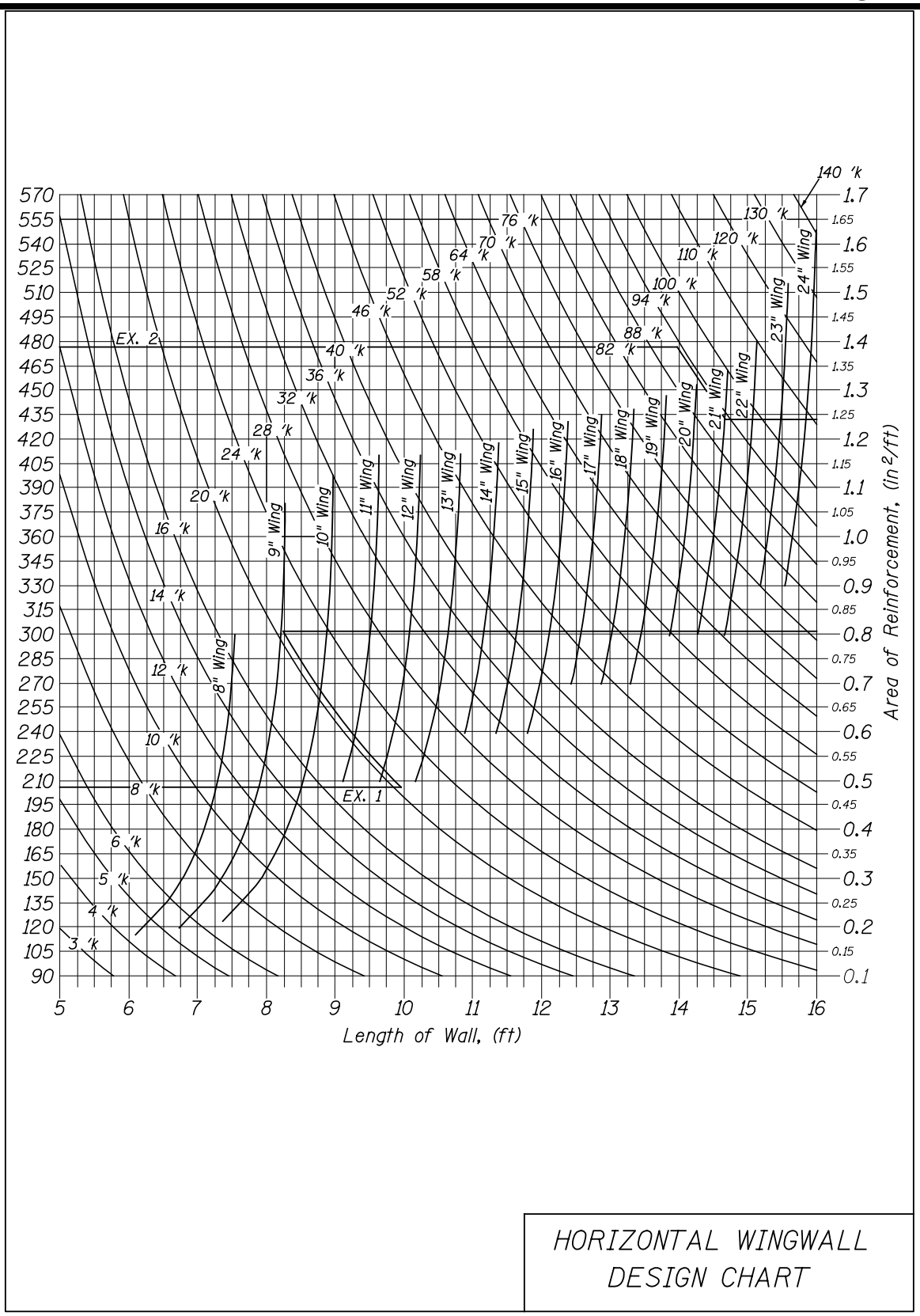
Length of Wall, (ft)
Area of Reinforcement, (in²/ft)
EX. 1
EX. 2
3 'k
4 'k
5 'k
6 'k
8 'k
10 'k
12 'k
14 'k
16 'k
20 'k
24 'k
28 'k
32 'k
36 'k
40 'k
46 'k
52 'k
58 'k
64 'k
70 'k
76 'k
82 'k
88 'k
94 'k
100 'k
110 'k
120 'k
130 'k
140 'k
8" Wing
9" Wing
10" Wing
11" Wing
12" Wing
13" Wing
14" Wing
15" Wing
16" Wing
17" Wing
18" Wing
19" Wing
20" Wing
21" Wing
22" Wing
23" Wing
24" Wing
HORIZONTAL WINGWALL
DESIGN CHART

Figure 4.2.2-3

4.2.3 Design Examples

EXAMPLE 1

GIVEN: Backslope Perpendicular to Wall = 1:3 (V:H)

Distance to Break in Slope = 12 ft.

Max. Wingwall Height from Invert to Top of Wall = 7 ft.

Min. Wingwall Height from Invert to Top of Wall = 3.5 ft.

Wall Length = 10 ft.

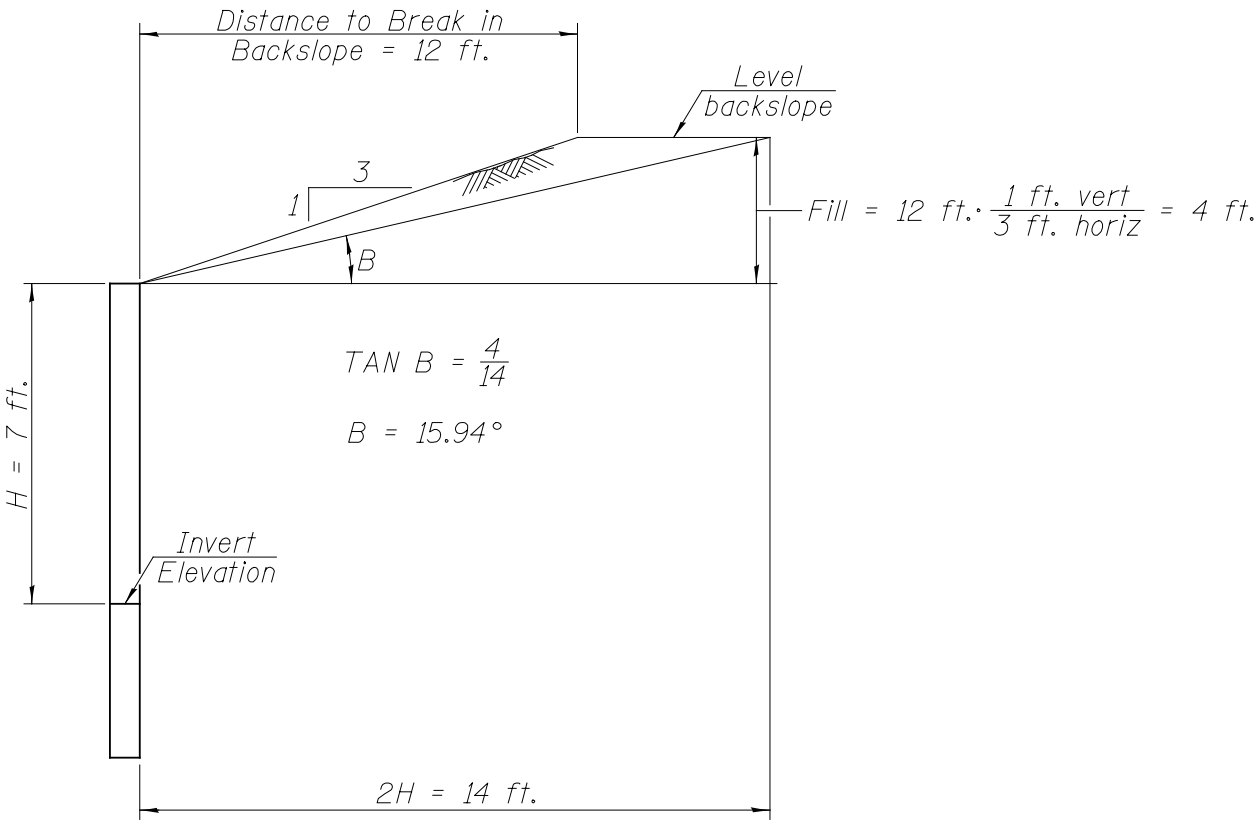

From Table 4.1.1.2-1, For B = 16 degrees, horizontal pressure = 65 psf

P_A = (65 psf)(7 ft.) = 455 lbs. / ft.

P_B = (65 psf)(3.5 ft.) = 227.5 lbs. / ft.

$$C = \frac{1.35}{6}\left(455\text{ lbs./ft.} + 2\left(227.5\text{ lbs./ft.}\right)\right)$$

= 205 lbs. / ft.

M = (205 lbs. / ft.) $(10\text{ ft.})^2$ = 20500 lb. – ft. = 20.5 k-ft.

Enter chart at C = 205, extend line horizontally to the intersection of vertical length of wall (L = 10 ft.) line, and project a line parallel to moment curve. At the intersection of the thinnest wall thickness curve (9" wing), project a line horizontally to area of reinforcement, and read As = 0.82 in^2 per foot. Referring to the table above, a #8 bar should be used, making the size and spacing of h_6 or h_8 bars #8 @ 11" cts.

EXAMPLE 2

GIVEN: Backslope Perpendicular to Wall = 1:2 (V:H)

Distance to Break in Slope = 30 ft.

Max. Wingwall Height from Invert to Top of Wall = 14 ft.

Min. Wingwall Height from Invert to Top of Wall = 8 ft.

Wall Length = 14 ft.

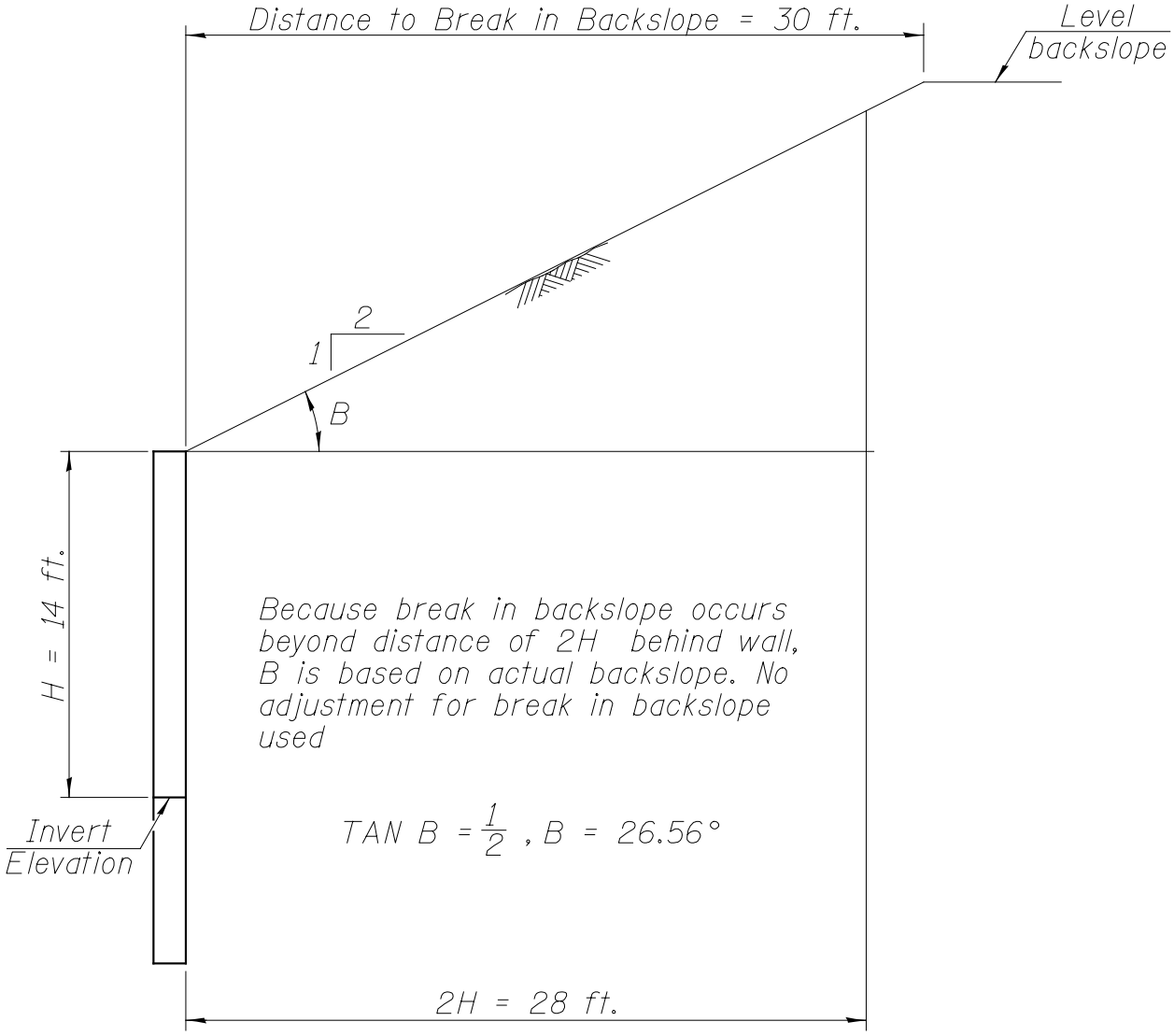

From Table 4.1.1.2-1, For B = 26.56 degrees, horizontal pressure = 71 psf

P_A = (71 psf)(14 ft.) = 994 lbs. / ft.

P_B = (71 psf)(8 ft.) = 568 lbs. / ft.

$$C = \frac{1.35}{6}\left(994 \text{ lbs.}/\text{ft.} + 2\left(568 \text{ lbs.}/\text{ft.}\right)\right)$$

= 479.25 lbs. / ft.

M = (479.25 lbs. / ft.) (14 ft.)^2 = 93933 lb. – ft. = 93.9 k-ft.

Enter chart at C = 479, extend line horizontally to the intersection of vertical length of wall (L = 14 ft.) line, and project a line parallel to moment curve. At the intersection of the thinnest wall thickness curve (21" wing), project a line horizontally to area of reinforcement, and read A_s = 1.24 in^2 per foot. Referring to the table above, a #9 bar should be used, making the size and spacing of h_6 or h_8 bars #9 @ 9" cts.

4.3 Two-Way Cantilever L-Type

Two-way cantilever L-type wingwalls are adequate for use for wall lengths between 14 and 30 feet.

4.3.1 Details

Details for two-way L-type cantilever wingwalls are given in Figures 4.3.1-1 and 4.3.1-2. These walls are connected to the culvert both along the vertical face of the sidewall and along a horizontal face where the footing of the wingwall connects with the bottom slab of the culvert.

Walls and footings less than 10 inches in thickness contain only one row of reinforcement. Walls and footing ten inches or greater contain a second row of reinforcement in the front face of the wall and/or the bottom of the footing. See Figure 4.3.1-1.

Because the L-type wingwall takes two-way action into account in the design, counterforts must be added to the walls on the obtuse corners to ensure this behavior is present. These counterforts contain the same reinforcement used in the design of the wall. See Figure 4.3.1-2.

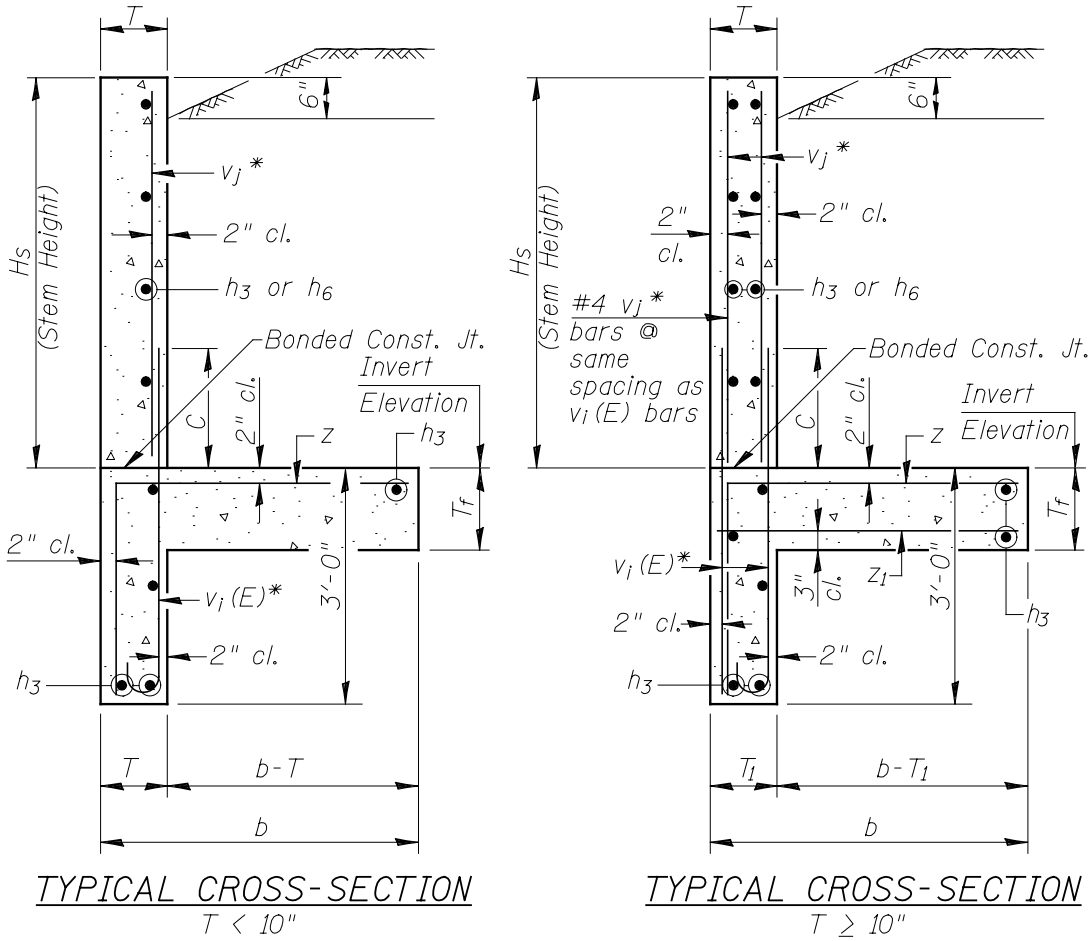

* Note:
The subscripts "i" and "j" are variables. These can assume individual values as shown on the plans such as v_1, v_2, v_3, ...etc.

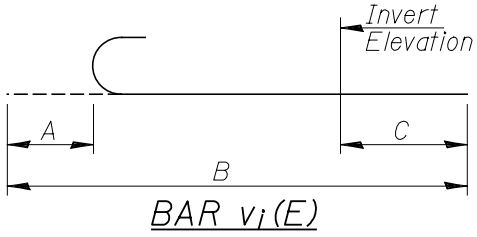

L-TYPE TWO-WAY
CANTILEVER WINGWALLS

Figure 4.3.1-1

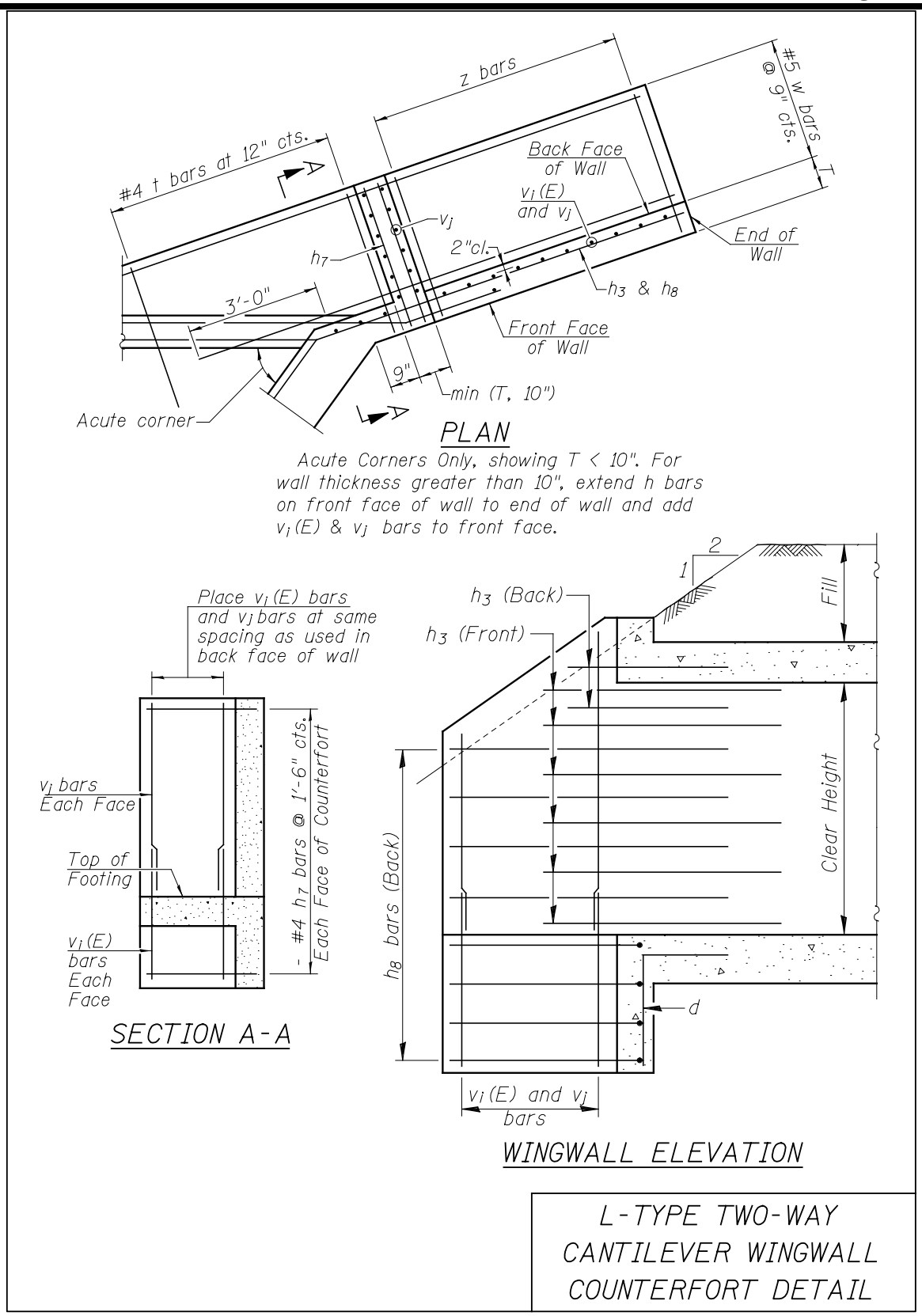
z bars
#5 w bars @ 9" cts.
T
#4 t bars at 12" cts.
A
Back Face of Wall
v_i(E) and v_j
v_j
2"cl.
End of Wall
h_7
h_3 & h_8
3'-0"
Front Face of Wall
9"
min (T, 10")
Acute corner
A
PLAN
Acute Corners Only, showing T < 10". For wall thickness greater than 10", extend h bars on front face of wall to end of wall and add v_i(E) & v_j bars to front face.
Place v_i(E) bars and v_j bars at same spacing as used in back face of wall
v_i bars Each Face
Top of Footing
v_i(E) bars Each Face
- #4 h_7 bars @ 1'-6" cts. Each Face of Counterfort
SECTION A-A
2
1
Fill
h_3 (Back)
h_3 (Front)
Clear Height
h_8 bars (Back)
d
v_i(E) and v_j bars
WINGWALL ELEVATION
L-TYPE TWO-WAY CANTILEVER WINGWALL COUNTERFORT DETAIL

Figure 4.3.1-2

4.3.2 Design Table

The cross sectional dimensions, and size and spacing of main reinforcement bars required for the L-Type wingwalls are tabulated in Table 4.3.2-1 below. The values for a specific stem height are valid for all backfill angles up to 26.56 degrees (equivalent to a 1:2 (V:H) backslope). Therefore, only the design height is required to obtain a design.

The stem height (Hs), as shown in Figure 4.3.1-1, is the vertical distance from the top of the stem to the invert, or top of footing. A simpler method to approximate this stem height is obtained by adding the clear height of the barrel to the top slab thickness and the headwall height and then subtracting an amount (1" to 6 1/2") to obtain an even six-inch increment.

Figure 4.3.1-1 shows the nomenclature used in the presentation of the tables. It should be noted that in the case of the v-bars, subscripts “i” and “j” have been used so that those subscripts can assume individual values on the plans for various groups of bars, e.g., v5, v6, v2, etc.

TWO-WAY CANTILEVER L-TYPE WINGWALLS

STEM			FOOTING		v1(E) BARS					z BARS		h(E) BARS	
H_S	T	T_1	B	T_f	SIZE	SPA.	A	B	C	SIZE	SPA.	SIZE	SPA.
ft. - in.	ft. - in.	ft. - in.	ft. - in.	ft. - in.	#	in.	ft. - in.	ft. - in.	ft. - in.	#	in.	#	in.
3' - 0"	0' - 6"	0' - 6"	1' - 8"	0' - 6"	4	12	0' - 6"	5' - 11"	2' - 7"	4	12	4	12
3' - 6"	0' - 6"	0' - 6"	1' - 8"	0' - 6"	4	12	0' - 6"	5' - 11"	2' - 7"	4	12	4	12
4' - 0"	0' - 6"	0' - 6"	1' - 11"	0' - 6"	4	12	0' - 6"	5' - 11"	2' - 7"	4	12	4	12
4' - 6"	0' - 6"	0' - 6"	2' - 1"	0' - 6"	4	10	0' - 6"	5' - 11"	2' - 7"	4	12	4	10
5' - 0"	0' - 6"	0' - 6"	2' - 5"	0' - 6"	4	8	0' - 6"	5' - 11"	2' - 7"	4	10	4	8
5' - 6"	0' - 6"	0' - 6"	2' - 7"	0' - 6"	4	7	0' - 6"	5' - 11"	2' - 7"	4	7	4	7
6' - 0"	0' - 6"	0' - 6"	2' - 10"	0' - 6"	4	6	0' - 6"	5' - 11"	2' - 7"	4	6	4	6
6' - 6"	0' - 7"	0' - 7"	3' - 1"	0' - 7"	4	5	0' - 6"	5' - 11"	2' - 7"	4	5	4	5
7' - 0"	0' - 7"	0' - 7"	3' - 4"	0' - 7"	4	5	0' - 6"	5' - 11"	2' - 7"	4	5	4	5
7' - 6"	0' - 8"	0' - 8"	3' - 7"	0' - 8"	4	5	0' - 6"	5' - 11"	2' - 7"	4	5	4	5
8' - 0"	0' - 8"	0' - 8"	3' - 10"	0' - 8"	5	6	0' - 7"	6' - 5"	3' - 0"	5	6	5	6
8' - 6"	0' - 9"	0' - 9"	4' - 1"	0' - 9"	5	6	0' - 7"	6' - 5"	3' - 0"	5	6	5	6
9' - 0"	0' - 9"	0' - 9"	4' - 5"	0' - 9"	5	5	0' - 7"	6' - 5"	3' - 0"	5	5	5	5
9' - 6"	0' - 10"	0' - 10"	4' - 8"	0' - 10"	5	5	0' - 7"	6' - 5"	3' - 0"	5	5	5	5
10' - 0"	0' - 10"	0' - 10"	4' - 11"	0' - 10"	5	5	0' - 7"	6' - 5"	3' - 0"	5	5	5	5
10' - 6"	0' - 11"	0' - 11"	5' - 2"	0' - 11"	6	6	0' - 8"	6' - 6"	3' - 0"	6	6	6	6
11' - 0"	0' - 11"	0' - 11"	5' - 5"	0' - 11"	6	5	0' - 8"	6' - 6"	3' - 0"	6	5	6	5
11' - 6"	1' - 0"	1' - 0"	5' - 8"	1' - 0"	6	5	0' - 8"	6' - 6"	3' - 0"	6	5	6	5
12' - 0"	1' - 0"	1' - 0"	5' - 11"	1' - 0"	7	6	0' - 10"	6' - 8"	3' - 0"	7	6	7	6
12' - 6"	1' - 0"	1' - 0"	6' - 2"	1' - 0"	7	6	0' - 10"	6' - 8"	3' - 0"	7	6	7	6
13' - 0"	1' - 0"	1' - 0"	6' - 5"	1' - 0"	8	6	0' - 11"	6' - 9"	3' - 0"	7	6	8	6
13' - 6"	1' - 0"	1' - 2"	6' - 8"	1' - 0"	8	6	0' - 11"	6' - 9"	3' - 0"	7	6	8	6
14' - 0"	1' - 0"	1' - 3"	6' - 11"	1' - 0"	8	6	0' - 11"	6' - 9"	3' - 0"	7	6	8	6

Table 4.3.2-1

4.3.3 Design Example

Given: 6' x 4' Simple Span Box

Top Slab = 6",

Compute Design Stem Height

Clear Height of barrel	=	4'-0"
Thickness of top slab	=	+ 6"
Headwall	=	+ 9"
	=	5'-3"
Subtract (1" to 6 1/2")		- 3"
Design Stem Height (Hs)	=	5'-0"

From the tables for stem height (H_s) = 5'-0", find the following:

Stem thickness = T = 6"

Footing width - Stem thickness = B - T = 2'-5" – 6" = 1'-11"

Footing thickness = T_f = 6"

Stem Reinforcement:

- v_i(E) bars: #4 @ 8"
- h bars: #4 @ 8"

Footing reinforcement:

- z bars: #4 @ 10"

4.4 Vertical Cantilever T-Type

4.4.1 Details

A cross-section for vertical cantilever T-type walls is shown in Figure 4.4.1-1. A front elevation view, including a bar cutting diagram, is shown in Figure 4.4.1-2.

Because of the amount of excavation required for T-type walls adjacent to culverts, barrel cutoff walls for culverts adjacent to T-type walls shall wrap around the sides of the culvert. See Figure 4.4.1-3 for details.

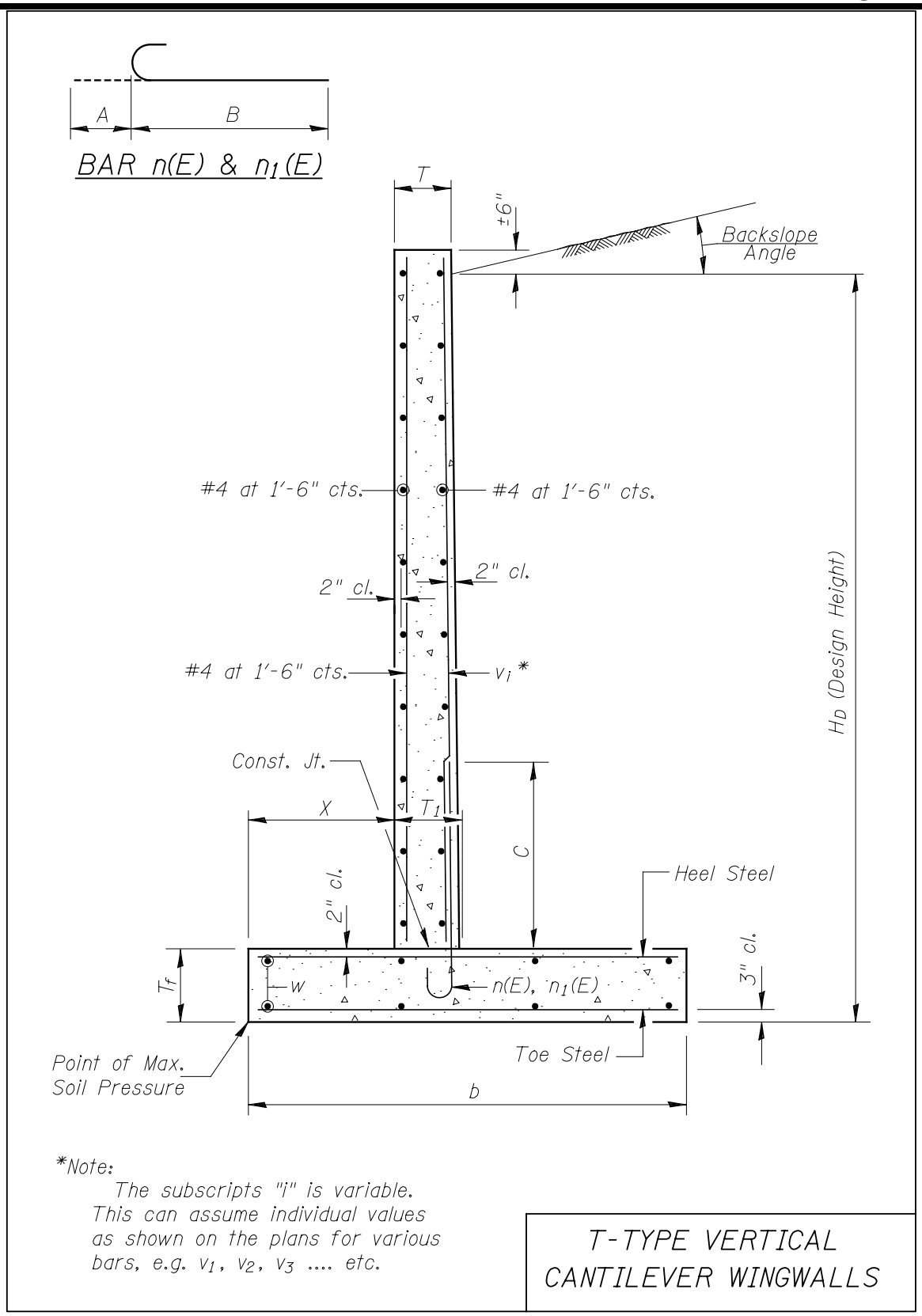
A
B
BAR n(E) & n1(E)
T
±6"
Backslope Angle
#4 at 1'-6" cts.
#4 at 1'-6" cts.
2" cl.
2" cl.
#4 at 1'-6" cts.
vi *
HD (Design Height)
Const. Jt.
X
T1
C
Heel Steel
2" cl.
3" cl.
Tf
W
n(E), n1(E)
Point of Max. Soil Pressure
Toe Steel
b
*Note:
The subscripts "i" is variable. This can assume individual values as shown on the plans for various bars, e.g. v1, v2, v3 .... etc.
T-TYPE VERTICAL CANTILEVER WINGWALLS

Figure 4.4.1-1

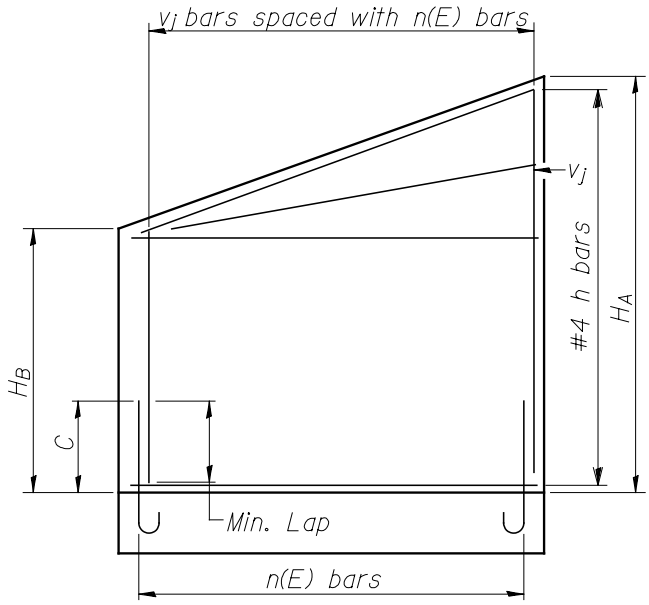

ELEVATION
Showing stem reinforcement

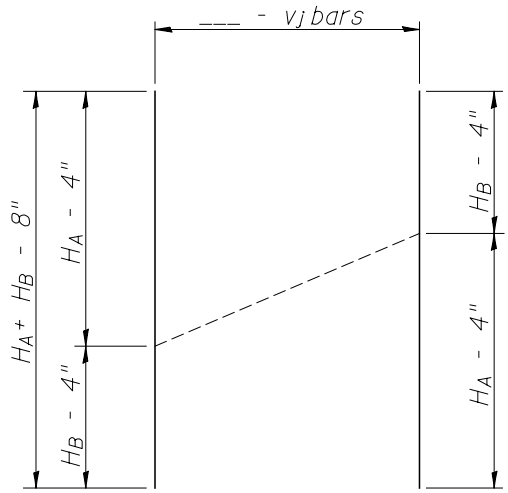

CUTTING DIAGRAM

Note: For lengths of minimum lap, see Section 5.

STEM REINFORCEMENT LAYOUT

Figure 4.4.1-2

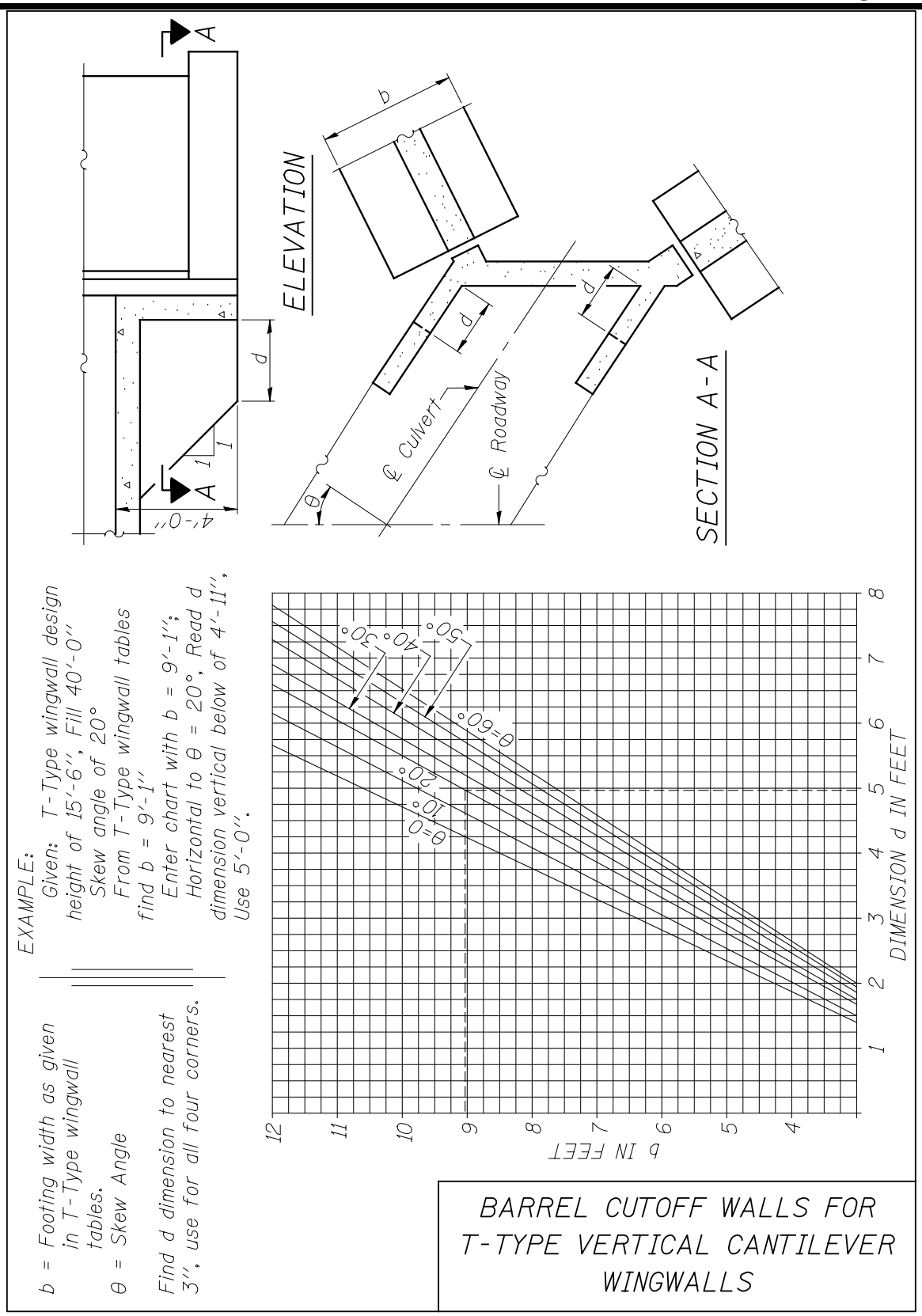
A
A
4'-0"
1
1
d
ELEVATION
b
d
d
℄ Culvert
℄ Roadway
θ
SECTION A-A
b = Footing width as given in T-Type wingwall tables.
θ = Skew Angle
Find d dimension to nearest 3", use for all four corners.
EXAMPLE:
Given: T-Type wingwall design height of 15'-6", Fill 40'-0"
Skew angle of 20°
From T-Type wingwall tables find b = 9'-1"
Enter chart with b = 9'-1"; Horizontal to θ = 20°, Read d dimension vertical below of 4'-11", Use 5'-0".
θ=0°
10°
20°
30°
40°
50°
θ=60°
b IN FEET
12
11
10
9
8
7
6
5
4
1
2
3
4
5
6
7
8
DIMENSION d IN FEET
BARREL CUTOFF WALLS FOR T-TYPE VERTICAL CANTILEVER WINGWALLS

Figure 4.4.1-3

4.4.2 Table Use

The cross sectional dimensions, and size and spacing of main reinforcement bars required for the T-Type wingwalls are tabulated in the design tables below. To use these tables, the wall height (H_D) and the backslope angle (B) must first be calculated. The wall height (H_D) is the difference between six inches below the top of the wall to the bottom of the footing. See Figure 4.4.1-1. The backslope angle is calculated using the procedure in Figure 4.1.1.2-2.

For most calculations, the resulting value of the backslope angle B will fall between two design rows. When this is the case, the row that requires the wider footing should be used. For small backslope angles, this will be the smaller of the two angles. For large backslope angles, it will be the larger of the two.

Figure 4.4.1-2 shows the nomenclature used in the presentation of the tables. To reduce the amount of lapped steel in the walls, v_j bars should be furnished utilizing cutting diagrams.

VERTICAL CANTILEVER T-TYPE WINGWALLS, DESIGN HEIGHT H_D = 7'-0"

FILL	BACKSLOPE	STEM		FOOTING			n(E) BARS					v_i BAR	t_t BAR		t_b BAR		t_t t_b BAR	w BAR		BEARING PRESSURE	
HEIGHT	ANGLE	T	T_1	T_f	b	X	SIZE	SPC.	A	B	C	SIZE	SIZE	SPC.	SIZE	SPC.	LENGTH	SIZE	SPC.	SERVICE I	STRENGTH I
ft.	degrees	ft. - in.	ft. - in.	ft. - in.	ft. - in.	ft. - in.	#	in.	ft. - in.	ft. - in.	ft. - in.	#	#	in.	#	in.	ft. - in.	#	in.	psf	psf
0	0	0' - 10"	0' - 10"	1' - 1"	3' - 8"	1' - 2"	4	12	0' - 6"	3' - 5"	2' - 7"	4	4	12	4	12	3' - 5"	4	12	1380	1760
2.5	10	0' - 10"	0' - 10"	1' - 1"	3' - 5"	1' - 1"	4	12	0' - 6"	3' - 5"	2' - 7"	4	4	12	4	12	3' - 2"	4	12	1930	2340
5	20	0' - 10"	0' - 10"	1' - 1"	3' - 4"	1' - 1"	4	11	0' - 6"	3' - 5"	2' - 7"	4	4	12	4	12	3' - 1"	4	12	2170	2580
≥ 7.5	26.56	0' - 10"	0' - 10"	1' - 1"	3' - 5"	1' - 1"	4	10	0' - 6"	3' - 5"	2' - 7"	4	4	12	4	12	3' - 2"	4	12	2520	3120

VERTICAL CANTILEVER T-TYPE WINGWALLS, DESIGN HEIGHT H_D = 7'-6"

FILL	BACKSLOPE	STEM		FOOTING			n(E) BARS					v_i BAR	t_t BAR		t_b BAR		t_t t_b BAR	w BAR		BEARING PRESSURE	
HEIGHT	ANGLE	T	T_1	T_f	b	X	SIZE	SPC.	A	B	C	SIZE	SIZE	SPC.	SIZE	SPC.	LENGTH	SIZE	SPC.	SERVICE I	STRENGTH I
ft.	degrees	ft. - in.	ft. - in.	ft. - in.	ft. - in.	ft. - in.	#	in.	ft. - in.	ft. - in.	ft. - in.	#	#	in.	#	in.	ft. - in.	#	in.	psf	psf
0	0	0' - 10"	0' - 10"	1' - 1"	4' - 0"	1' - 4"	4	12	0' - 6"	3' - 5"	2' - 7"	4	4	12	4	12	3' - 9"	4	12	1390	1730
2.5	9	0' - 10"	0' - 10"	1' - 1"	3' - 8"	1' - 2"	4	11	0' - 6"	3' - 5"	2' - 7"	4	4	12	4	12	3' - 5"	4	12	2020	2520
5	18	0' - 10"	0' - 10"	1' - 1"	3' - 7"	1' - 2"	4	10	0' - 6"	3' - 5"	2' - 7"	4	4	12	4	12	3' - 4"	4	12	2260	2770
≥ 7.5	26.56	0' - 10"	0' - 10"	1' - 1"	3' - 8"	1' - 2"	4	8	0' - 6"	3' - 5"	2' - 7"	4	4	12	4	12	3' - 5"	4	12	2680	3390

VERTICAL CANTILEVER T-TYPE WINGWALLS, DESIGN HEIGHT H_D = 8'-0"

FILL	BACKSLOPE	STEM		FOOTING			n(E) BARS					v_i BAR	t_t BAR		t_b BAR		t_t t_b BAR	w BAR		BEARING PRESSURE	
HEIGHT	ANGLE	T	T_1	T_f	b	X	SIZE	SPC.	A	B	C	SIZE	SIZE	SPC.	SIZE	SPC.	LENGTH	SIZE	SPC.	SERVICE I	STRENGTH I
ft.	degrees	ft. - in.	ft. - in.	ft. - in.	ft. - in.	ft. - in.	#	in.	ft. - in.	ft. - in.	ft. - in.	#	#	in.	#	in.	ft. - in.	#	in.	psf	psf
0	0	0' - 10"	0' - 10"	1' - 1"	4' - 3"	1' - 4"	4	11	0' - 6"	3' - 5"	2' - 7"	4	4	12	4	12	4' - 0"	4	12	1520	1910
2.5	9	0' - 10"	0' - 10"	1' - 1"	3' - 11"	1' - 4"	4	10	0' - 6"	3' - 5"	2' - 7"	4	4	12	4	12	3' - 8"	4	12	2070	2590
5	17	0' - 10"	0' - 10"	1' - 1"	3' - 10"	1' - 3"	4	9	0' - 6"	3' - 5"	2' - 7"	4	4	12	4	12	3' - 7"	4	12	2330	2900
7.5	25	0' - 10"	0' - 10"	1' - 1"	3' - 11"	1' - 3"	4	7	0' - 6"	3' - 5"	2' - 7"	4	4	12	4	12	3' - 8"	4	12	2840	3620
≥ 10	26.56	0' - 10"	0' - 10"	1' - 1"	3' - 11"	1' - 3"	4	7	0' - 6"	3' - 5"	2' - 7"	4	4	12	4	12	3' - 8"	4	12	2840	3620

VERTICAL CANTILEVER T-TYPE WINGWALLS, DESIGN HEIGHT H_D = 8'-6"

FILL	BACKSLOPE	STEM		FOOTING			n(E) BARS					v_i BAR	t_t BAR		t_b BAR		t_t t_b BAR	w BAR		BEARING PRESSURE	
HEIGHT	ANGLE	T	T_1	T_f	b	X	SIZE	SPC.	A	B	C	SIZE	SIZE	SPC.	SIZE	SPC.	LENGTH	SIZE	SPC.	SERVICE I	STRENGTH I
ft.	degrees	ft. - in.	ft. - in.	ft. - in.	ft. - in.	ft. - in.	#	in.	ft. - in.	ft. - in.	ft. - in.	#	#	in.	#	in.	ft. - in.	#	in.	psf	psf
0	0	0' - 10"	0' - 10"	1' - 1"	4' - 6"	1' - 6"	4	9	0' - 6"	3' - 5"	2' - 7"	4	4	12	4	12	4' - 3"	4	12	1550	2020
2.5	8	0' - 10"	0' - 10"	1' - 1"	4' - 2"	1' - 5"	4	9	0' - 6"	3' - 5"	2' - 7"	4	4	12	4	12	3' - 11"	4	12	2140	2730
5	16	0' - 10"	0' - 10"	1' - 1"	4' - 1"	1' - 4"	4	8	0' - 6"	3' - 5"	2' - 7"	4	4	12	4	12	3' - 10"	4	12	2410	3030
7.5	24	0' - 10"	0' - 10"	1' - 1"	4' - 1"	1' - 4"	4	7	0' - 6"	3' - 5"	2' - 7"	4	4	12	4	12	3' - 10"	4	12	2850	3730
≥ 10	26.56	0' - 10"	0' - 10"	1' - 1"	4' - 2"	1' - 4"	4	6	0' - 6"	3' - 5"	2' - 7"	4	4	12	4	12	3' - 11"	4	12	2980	3870

VERTICAL CANTILEVER T-TYPE WINGWALLS, DESIGN HEIGHT H_D = 9'-0"

FILL	BACKSLOPE	STEM		FOOTING			n(E) BARS					v_i BAR	t_t BAR		t_b BAR		t_t, t_b BAR	w BAR		BEARING PRESSURE	
HEIGHT	ANGLE	T	T_1	T_f	b	X	SIZE	SPC.	A	B	C	SIZE	SIZE	SPC.	SIZE	SPC.	LENGTH	SIZE	SPC.	SERVICE I	STRENGTH I
ft.	degrees	ft. - in.	ft. - in.	ft. - in.	ft. - in.	ft. - in.	#	in.	ft. - in.	ft. - in.	ft. - in.	#	#	in.	#	in.	ft. - in.	#	in.	psf	psf
0	0	0' - 10"	0' - 10"	1' - 1"	4' - 10"	1' - 7"	4	8	0' - 6"	3' - 5"	2' - 7"	4	4	12	4	12	4' - 7"	4	12	1600	2000
2.5	8	0' - 10"	0' - 10"	1' - 1"	4' - 6"	1' - 6"	4	8	0' - 6"	3' - 5"	2' - 7"	4	4	12	4	12	4' - 3"	4	12	2200	2720
5	16	0' - 10"	0' - 10"	1' - 1"	4' - 4"	1' - 5"	4	7	0' - 6"	3' - 5"	2' - 7"	4	4	12	4	12	4' - 1"	4	12	2470	3160
7.5	23	0' - 10"	0' - 10"	1' - 1"	4' - 3"	1' - 5"	4	6	0' - 6"	3' - 5"	2' - 7"	4	4	12	4	12	4' - 0"	4	12	2910	3930
≥ 10	26.56	0' - 10"	0' - 10"	1' - 1"	4' - 6"	1' - 6"	4	6	0' - 6"	3' - 5"	2' - 7"	4	4	10	4	12	4' - 3"	4	12	3010	3760

VERTICAL CANTILEVER T-TYPE WINGWALLS, DESIGN HEIGHT H_D = 9'-6"

FILL	BACKSLOPE	STEM		FOOTING			n(E) BARS					v_i BAR	t_t BAR		t_b BAR		t_t, t_b BAR	w BAR		BEARING PRESSURE	
HEIGHT	ANGLE	T	T_1	T_f	b	X	SIZE	SPC.	A	B	C	SIZE	SIZE	SPC.	SIZE	SPC.	LENGTH	SIZE	SPC.	SERVICE I	STRENGTH I
ft.	degrees	ft. - in.	ft. - in.	ft. - in.	ft. - in.	ft. - in.	#	in.	ft. - in.	ft. - in.	ft. - in.	#	#	in.	#	in.	ft. - in.	#	in.	psf	psf
0	0	0' - 10"	0' - 10"	1' - 1"	5' - 1"	1' - 8"	4	7	0' - 6"	3' - 5"	2' - 7"	4	4	12	4	12	4' - 10"	4	12	1690	2160
2.5	7	0' - 10"	0' - 10"	1' - 1"	4' - 9"	1' - 7"	4	7	0' - 6"	3' - 5"	2' - 7"	4	4	12	4	12	4' - 6"	4	12	2270	2850
5	15	0' - 10"	0' - 10"	1' - 1"	4' - 8"	1' - 6"	4	6	0' - 6"	3' - 5"	2' - 7"	4	4	12	4	12	4' - 5"	4	12	2510	3090
7.5	22	0' - 10"	0' - 10"	1' - 1"	4' - 7"	1' - 6"	4	6	0' - 6"	3' - 5"	2' - 7"	4	4	11	4	12	4' - 4"	4	12	2880	3700
≥ 10	26.56	0' - 10"	0' - 10"	1' - 1"	4' - 9"	1' - 6"	4	5	0' - 6"	3' - 5"	2' - 7"	4	4	9	4	11	4' - 6"	4	12	3230	4110

VERTICAL CANTILEVER T-TYPE WINGWALLS, DESIGN HEIGHT H_D = 10'-0"

FILL	BACKSLOPE	STEM		FOOTING			n(E) BARS					v_i BAR	t_t BAR		t_b BAR		t_t, t_b BAR	w BAR		BEARING PRESSURE	
HEIGHT	ANGLE	T	T_1	T_f	b	X	SIZE	SPC.	A	B	C	SIZE	SIZE	SPC.	SIZE	SPC.	LENGTH	SIZE	SPC.	SERVICE I	STRENGTH I
ft.	degrees	ft. - in.	ft. - in.	ft. - in.	ft. - in.	ft. - in.	#	in.	ft. - in.	ft. - in.	ft. - in.	#	#	in.	#	in.	ft. - in.	#	in.	psf	psf
0	0	0' - 10"	0' - 10"	1' - 4"	5' - 4"	1' - 9"	5	9	0' - 7"	4' - 3"	3' - 2"	4	4	12	4	12	5' - 1"	4	12	1820	2340
2.5	7	0' - 10"	0' - 10"	1' - 4"	5' - 0"	1' - 8"	5	8	0' - 7"	4' - 3"	3' - 2"	4	4	12	4	12	4' - 9"	4	12	2380	3010
5	14	0' - 10"	0' - 10"	1' - 4"	4' - 10"	1' - 7"	5	8	0' - 7"	4' - 3"	3' - 2"	4	4	12	4	12	4' - 7"	4	12	2670	3450
7.5	21	0' - 10"	0' - 10"	1' - 4"	4' - 10"	1' - 7"	5	7	0' - 7"	4' - 3"	3' - 2"	4	4	12	4	12	4' - 7"	4	12	2980	3780
≥ 10	26.56	0' - 10"	0' - 10"	1' - 4"	5' - 0"	1' - 8"	5	6	0' - 7"	4' - 3"	3' - 2"	4	4	10	4	12	4' - 9"	4	12	3310	4200

VERTICAL CANTILEVER T-TYPE WINGWALLS, DESIGN HEIGHT H_D = 10'-6"

FILL	BACKSLOPE	STEM		FOOTING			n(E) BARS					v_i BAR	t_t BAR		t_b BAR		t_t, t_b BAR	w BAR		BEARING PRESSURE	
HEIGHT	ANGLE	T	T_1	T_f	b	X	SIZE	SPC.	A	B	C	SIZE	SIZE	SPC.	SIZE	SPC.	LENGTH	SIZE	SPC.	SERVICE I	STRENGTH I
ft.	degrees	ft. - in.	ft. - in.	ft. - in.	ft. - in.	ft. - in.	#	in.	ft. - in.	ft. - in.	ft. - in.	#	#	in.	#	in.	ft. - in.	#	in.	psf	psf
0	0	0' - 10"	0' - 10"	1' - 4"	5' - 6"	1' - 10"	5	8	0' - 7"	4' - 3"	3' - 2"	4	4	12	4	12	5' - 3"	4	12	1950	2620
2.5	7	0' - 10"	0' - 10"	1' - 4"	5' - 1"	1' - 8"	5	7	0' - 7"	4' - 3"	3' - 2"	4	4	12	4	12	4' - 10"	4	12	2740	3520
5	13	0' - 10"	0' - 10"	1' - 4"	5' - 0"	1' - 8"	5	6	0' - 7"	4' - 3"	3' - 2"	4	4	11	4	12	4' - 9"	4	12	3080	4020
7.5	20	0' - 10"	0' - 10"	1' - 4"	5' - 2"	1' - 8"	5	5	0' - 7"	4' - 3"	3' - 2"	4	4	9	4	12	4' - 11"	4	12	3610	4780
≥ 10	26.56	0' - 10"	0' - 10"	1' - 4"	5' - 2"	1' - 8"	5	5	0' - 7"	4' - 3"	3' - 2"	4	4	9	4	12	4' - 11"	4	12	3610	4780

VERTICAL CANTILEVER T-TYPE WINGWALLS, DESIGN HEIGHT H_D = 11'-0"

FILL	BACKSLOPE	STEM		FOOTING			n(E) BARS					v_i BAR	t_t BAR		t_b BAR		t_t t_b BAR	w BAR		BEARING PRESSURE	
HEIGHT	ANGLE	T	T_1	T_f	b	X	SIZE	SPC.	A	B	C	SIZE	SIZE	SPC.	SIZE	SPC.	LENGTH	SIZE	SPC.	SERVICE I	STRENGTH I
ft.	degrees	ft. - in.	ft. - in.	ft. - in.	ft. - in.	ft. - in.	#	in.	ft. - in.	ft. - in.	ft. - in.	#	#	in.	#	in.	ft. - in.	#	in.	psf	psf
0	0	0' - 10"	0' - 10"	1' - 4"	5' - 11"	1' - 11"	5	7	0' - 7"	4' - 3"	3' - 2"	4	4	12	4	12	5' - 8"	4	12	1960	2490
2.5	6	0' - 10"	0' - 10"	1' - 4"	5' - 6"	1' - 10"	5	7	0' - 7"	4' - 3"	3' - 2"	4	4	11	4	12	5' - 3"	4	12	2540	3290
5	13	0' - 10"	0' - 10"	1' - 4"	5' - 5"	1' - 9"	5	6	0' - 7"	4' - 3"	3' - 2"	4	4	11	4	12	5' - 2"	4	12	2770	3490
7.5	19	0' - 10"	0' - 10"	1' - 4"	5' - 4"	1' - 9"	5	6	0' - 7"	4' - 3"	3' - 2"	4	4	10	4	12	5' - 1"	4	12	3080	3950
10	24	0' - 10"	0' - 10"	1' - 4"	5' - 5"	1' - 10"	5	5	0' - 7"	4' - 3"	3' - 2"	4	4	10	4	11	5' - 2"	4	12	3600	4780
≥ 12.5	26.56	0' - 10"	0' - 10"	1' - 4"	5' - 6"	1' - 10"	5	5	0' - 7"	4' - 3"	3' - 2"	4	4	8	4	10	5' - 3"	4	12	3630	4720

VERTICAL CANTILEVER T-TYPE WINGWALLS, DESIGN HEIGHT H_D = 11'-6"

FILL	BACKSLOPE	STEM		FOOTING			n(E) BARS					v_i BAR	t_t BAR		t_b BAR		t_t t_b BAR	w BAR		BEARING PRESSURE	
HEIGHT	ANGLE	T	T_1	T_f	b	X	SIZE	SPC.	A	B	C	SIZE	SIZE	SPC.	SIZE	SPC.	LENGTH	SIZE	SPC.	SERVICE I	STRENGTH I
ft.	degrees	ft. - in.	ft. - in.	ft. - in.	ft. - in.	ft. - in.	#	in.	ft. - in.	ft. - in.	ft. - in.	#	#	in.	#	in.	ft. - in.	#	in.	psf	psf
0	0	0' - 10"	0' - 10"	1' - 6"	6' - 2"	2' - 0"	6	8	0' - 8"	5' - 1"	3' - 10"	5	4	12	4	12	5' - 11"	4	12	2060	2620
2.5	6	0' - 10"	0' - 10"	1' - 6"	5' - 10"	1' - 11"	6	8	0' - 8"	5' - 1"	3' - 10"	5	4	12	4	12	5' - 7"	4	12	2600	3200
5	12	0' - 10"	0' - 10"	1' - 6"	5' - 8"	1' - 11"	6	7	0' - 8"	5' - 1"	3' - 10"	5	4	11	4	12	5' - 5"	4	12	2830	3590
7.5	18	0' - 10"	0' - 10"	1' - 6"	5' - 7"	1' - 10"	6	7	0' - 8"	5' - 1"	3' - 10"	5	4	10	4	12	5' - 4"	4	12	3160	4060
10	23	0' - 10"	0' - 10"	1' - 6"	5' - 8"	1' - 10"	6	6	0' - 8"	5' - 1"	3' - 10"	5	4	9	4	12	5' - 5"	4	12	3670	4830
≥ 12.5	26.56	0' - 10"	0' - 10"	1' - 6"	5' - 9"	1' - 10"	6	5	0' - 8"	6' - 0"	4' - 9"	5	4	8	4	11	5' - 6"	4	12	3840	5060

VERTICAL CANTILEVER T-TYPE WINGWALLS, DESIGN HEIGHT H_D = 12'-0"

FILL	BACKSLOPE	STEM		FOOTING			n(E) BARS					v_i BAR	t_t BAR		t_b BAR		t_t t_b BAR	w BAR		BEARING PRESSURE	
HEIGHT	ANGLE	T	T_1	T_f	b	X	SIZE	SPC.	A	B	C	SIZE	SIZE	SPC.	SIZE	SPC.	LENGTH	SIZE	SPC.	SERVICE I	STRENGTH I
ft.	degrees	ft. - in.	ft. - in.	ft. - in.	ft. - in.	ft. - in.	#	in.	ft. - in.	ft. - in.	ft. - in.	#	#	in.	#	in.	ft. - in.	#	in.	psf	psf
0	0	0' - 10"	0' - 10"	1' - 6"	6' - 5"	2' - 1"	6	7	0' - 8"	5' - 1"	3' - 10"	5	4	12	4	12	6' - 2"	4	12	2140	2790
2.5	6	0' - 10"	0' - 10"	1' - 6"	6' - 1"	2' - 0"	6	7	0' - 8"	5' - 1"	3' - 10"	5	4	11	4	12	5' - 10"	4	12	2690	3370
5	12	0' - 10"	0' - 10"	1' - 6"	5' - 11"	1' - 11"	6	7	0' - 8"	5' - 1"	3' - 10"	5	4	10	4	12	5' - 8"	4	12	2940	3780
7.5	17	0' - 10"	0' - 10"	1' - 6"	5' - 10"	1' - 11"	6	6	0' - 8"	5' - 1"	3' - 10"	5	4	10	4	12	5' - 7"	4	12	3220	4150
10	23	0' - 10"	0' - 10"	1' - 6"	5' - 11"	1' - 11"	6	5	0' - 8"	6' - 0"	4' - 9"	5	4	8	4	11	5' - 8"	4	12	3640	4670
≥ 12.5	26.56	0' - 11"	0' - 11"	1' - 6"	6' - 0"	2' - 0"	6	6	0' - 8"	5' - 1"	3' - 10"	5	4	7	4	10	5' - 9"	4	12	3910	5110

VERTICAL CANTILEVER T-TYPE WINGWALLS, DESIGN HEIGHT H_D = 12'-6"

FILL	BACKSLOPE	STEM		FOOTING			n(E) BARS					v_i BAR	t_t BAR		t_b BAR		t_t t_b BAR	w BAR		BEARING PRESSURE	
HEIGHT	ANGLE	T	T_1	T_f	b	X	SIZE	SPC.	A	B	C	SIZE	SIZE	SPC.	SIZE	SPC.	LENGTH	SIZE	SPC.	SERVICE I	STRENGTH I
ft.	degrees	ft. - in.	ft. - in.	ft. - in.	ft. - in.	ft. - in.	#	in.	ft. - in.	ft. - in.	ft. - in.	#	#	in.	#	in.	ft. - in.	#	in.	psf	psf
0	0	1' - 0"	1' - 0"	1' - 6"	6' - 8"	2' - 2"	6	8	0' - 8"	5' - 1"	3' - 10"	5	4	12	4	12	6' - 5"	4	12	2240	2920
2.5	6	1' - 0"	1' - 0"	1' - 6"	6' - 4"	2' - 1"	6	8	0' - 8"	5' - 1"	3' - 10"	5	4	11	4	12	6' - 1"	4	12	2770	3480
5	11	1' - 0"	1' - 0"	1' - 6"	6' - 2"	2' - 0"	6	8	0' - 8"	5' - 1"	3' - 10"	5	4	10	4	12	5' - 11"	4	12	3030	3860
7.5	17	1' - 0"	1' - 0"	1' - 6"	6' - 1"	2' - 0"	6	7	0' - 8"	5' - 1"	3' - 10"	5	4	9	4	11	5' - 10"	4	12	3280	4170
10	22	1' - 0"	1' - 0"	1' - 6"	6' - 1"	2' - 0"	6	6	0' - 8"	5' - 1"	3' - 10"	5	4	8	4	11	5' - 10"	4	12	3670	4720
≥ 12.5	26.56	1' - 0"	1' - 0"	1' - 6"	6' - 3"	2' - 0"	6	5	0' - 8"	6' - 0"	4' - 9"	5	4	7	4	9	6' - 0"	4	12	4110	5360

VERTICAL CANTILEVER T-TYPE WINGWALLS, DESIGN HEIGHT H_D = 13'-0"

FILL	BACKSLOPE	STEM		FOOTING			n(E) BARS					v_i BAR	t_t BAR		t_b BAR		t_t t_b BAR	w BAR		BEARING PRESSURE	
HEIGHT	ANGLE	T	T_1	T_f	b	X	SIZE	SPC.	A	B	C	SIZE	SIZE	SPC.	SIZE	SPC.	LENGTH	SIZE	SPC.	SERVICE I	STRENGTH I
ft.	degrees	ft. - in.	ft. - in.	ft. - in.	ft. - in.	ft. - in.	#	in.	ft. - in.	ft. - in.	ft. - in.	#	#	in.	#	in.	ft. - in.	#	in.	psf	psf
0	0	1' - 0"	1' - 0"	1' - 6"	6' - 11"	2' - 3"	6	8	0' - 8"	5' - 1"	3' - 10"	5	4	11	4	12	6' - 8"	4	12	2330	3100
2.5	5	1' - 0"	1' - 0"	1' - 6"	6' - 7"	2' - 2"	6	7	0' - 8"	5' - 1"	3' - 10"	5	4	10	4	11	6' - 4"	4	12	2860	3650
5	11	1' - 0"	1' - 0"	1' - 6"	6' - 5"	2' - 1"	6	7	0' - 8"	5' - 1"	3' - 10"	5	4	9	4	11	6' - 2"	4	12	3110	4030
7.5	16	1' - 0"	1' - 0"	1' - 6"	6' - 4"	2' - 1"	6	7	0' - 8"	5' - 1"	3' - 10"	5	4	9	4	11	6' - 1"	4	12	3360	4300
10	21	1' - 0"	1' - 0"	1' - 6"	6' - 4"	2' - 1"	6	6	0' - 8"	5' - 1"	3' - 10"	5	4	8	4	10	6' - 1"	4	12	3700	4760
12.5	26	1' - 0"	1' - 0"	1' - 6"	6' - 6"	2' - 1"	6	5	0' - 8"	6' - 0"	4' - 9"	5	4	6	4	9	6' - 3"	4	12	4260	5600
≥ 15	26.56	1' - 0"	1' - 0"	1' - 6"	6' - 6"	2' - 1"	6	5	0' - 8"	6' - 0"	4' - 9"	5	4	6	4	9	6' - 3"	4	12	4260	5600

VERTICAL CANTILEVER T-TYPE WINGWALLS, DESIGN HEIGHT H_D = 13'-6"

FILL	BACKSLOPE	STEM		FOOTING			n(E) BARS					v_i BAR	t_t BAR		t_b BAR		t_t t_b BAR	w BAR		BEARING PRESSURE	
HEIGHT	ANGLE	T	T_1	T_f	b	X	SIZE	SPC.	A	B	C	SIZE	SIZE	SPC.	SIZE	SPC.	LENGTH	SIZE	SPC.	SERVICE I	STRENGTH I
ft.	degrees	ft. - in.	ft. - in.	ft. - in.	ft. - in.	ft. - in.	#	in.	ft. - in.	ft. - in.	ft. - in.	#	#	in.	#	in.	ft. - in.	#	in.	psf	psf
0	0	1' - 0"	1' - 0"	1' - 6"	7' - 2"	2' - 4"	6	7	0' - 8"	5' - 1"	3' - 10"	5	4	10	4	11	6' - 11"	4	12	2420	3260
2.5	5	1' - 0"	1' - 0"	1' - 6"	6' - 10"	2' - 3"	6	7	0' - 8"	5' - 1"	3' - 10"	5	4	9	4	10	6' - 7"	4	12	2940	3770
5	10	1' - 0"	1' - 0"	1' - 6"	6' - 8"	2' - 3"	6	7	0' - 8"	5' - 1"	3' - 10"	5	4	9	4	10	6' - 5"	4	12	3150	4120
7.5	16	1' - 0"	1' - 0"	1' - 6"	6' - 7"	2' - 2"	6	6	0' - 8"	5' - 1"	3' - 10"	5	4	8	4	10	6' - 4"	4	12	3440	4480
10	20	1' - 0"	1' - 0"	1' - 6"	6' - 7"	2' - 2"	6	6	0' - 8"	5' - 1"	3' - 10"	5	4	7	4	9	6' - 4"	4	12	3750	4830
12.5	25	1' - 0"	1' - 1"	1' - 6"	6' - 8"	2' - 3"	6	5	0' - 8"	6' - 0"	4' - 9"	5	4	6	4	8	6' - 5"	4	12	4370	5860
≥ 15	26.56	1' - 0"	1' - 1"	1' - 6"	6' - 8"	2' - 3"	6	5	0' - 8"	6' - 0"	4' - 9"	5	4	6	4	8	6' - 5"	4	12	4370	5860

VERTICAL CANTILEVER T-TYPE WINGWALLS, DESIGN HEIGHT H_D = 14'-0"

FILL	BACKSLOPE	STEM		FOOTING			n(E) BARS					v_i BAR	t_t BAR		t_b BAR		t_t, t_b BAR	w BAR		BEARING PRESSURE	
HEIGHT	ANGLE	T	T_1	T_f	b	X	SIZE	SPC.	A	B	C	SIZE	SIZE	SPC.	SIZE	SPC.	LENGTH	SIZE	SPC.	SERVICE I	STRENGTH I
ft.	degrees	ft. - in.	ft. - in.	ft. - in.	ft. - in.	ft. - in.	#	in.	ft. - in.	ft. - in.	ft. - in.	#	#	in.	#	in.	ft. - in.	#	in.	psf	psf
0	0	1' - 0"	1' - 0"	1' - 6"	7' - 6"	2' - 6"	6	7	0' - 8"	5' - 1"	3' - 10"	5	4	9	4	10	7' - 3"	4	12	2440	3210
2.5	5	1' - 0"	1' - 0"	1' - 6"	7' - 1"	2' - 4"	6	6	0' - 8"	5' - 1"	3' - 10"	5	4	9	4	9	6' - 10"	4	12	3040	3940
5	10	1' - 0"	1' - 0"	1' - 6"	6' - 11"	2' - 3"	6	6	0' - 8"	5' - 1"	3' - 10"	5	4	8	4	9	6' - 8"	4	12	3270	4320
7.5	15	1' - 0"	1' - 0"	1' - 6"	6' - 10"	2' - 3"	6	6	0' - 8"	5' - 1"	3' - 10"	5	4	7	4	9	6' - 7"	4	12	3510	4600
10	20	1' - 0"	1' - 1"	1' - 6"	6' - 9"	2' - 3"	6	6	0' - 8"	5' - 1"	3' - 10"	5	4	7	4	9	6' - 6"	4	12	3840	5040
12.5	24	1' - 0"	1' - 2"	1' - 6"	6' - 10"	2' - 3"	6	5	0' - 8"	6' - 0"	4' - 9"	5	4	5	4	8	6' - 7"	4	12	4380	5800
≥ 15	26.56	1' - 0"	1' - 2"	1' - 6"	6' - 11"	2' - 3"	6	5	0' - 8"	6' - 0"	4' - 9"	5	4	5	4	8	6' - 8"	4	12	4560	6080

VERTICAL CANTILEVER T-TYPE WINGWALLS, DESIGN HEIGHT H_D = 14'-6"

FILL	BACKSLOPE	STEM		FOOTING			n(E) BARS					v_i BAR	t_t BAR		t_b BAR		t_t, t_b BAR	w BAR		BEARING PRESSURE	
HEIGHT	ANGLE	T	T_1	T_f	b	X	SIZE	SPC.	A	B	C	SIZE	SIZE	SPC.	SIZE	SPC.	LENGTH	SIZE	SPC.	SERVICE I	STRENGTH I
ft.	degrees	ft. - in.	ft. - in.	ft. - in.	ft. - in.	ft. - in.	#	in.	ft. - in.	ft. - in.	ft. - in.	#	#	in.	#	in.	ft. - in.	#	in.	psf	psf
0	0	1' - 0"	1' - 0"	1' - 9"	7' - 9"	2' - 7"	7	8	0' - 10"	5' - 11"	4' - 5"	6	4	10	4	11	7' - 6"	4	11	2550	3350
2.5	5	1' - 0"	1' - 0"	1' - 9"	7' - 8"	2' - 7"	7	7	0' - 10"	5' - 11"	4' - 5"	6	4	9	4	10	7' - 5"	4	11	2910	3340
5	10	1' - 0"	1' - 0"	1' - 9"	7' - 2"	2' - 4"	7	7	0' - 10"	5' - 11"	4' - 5"	6	4	8	4	10	6' - 11"	4	11	3400	4470
7.5	15	1' - 0"	1' - 0"	1' - 9"	7' - 1"	2' - 4"	7	7	0' - 10"	5' - 11"	4' - 5"	6	4	8	4	10	6' - 10"	4	11	3630	4750
10	19	1' - 0"	1' - 0"	1' - 9"	7' - 0"	2' - 4"	7	6	0' - 10"	5' - 11"	4' - 5"	6	4	7	4	9	6' - 9"	4	11	3970	5300
12.5	23	1' - 0"	1' - 0"	1' - 9"	7' - 2"	2' - 4"	7	5	0' - 10"	7' - 0"	5' - 6"	6	4	5	4	9	6' - 11"	4	11	4460	5820
≥ 15	26.56	1' - 0"	1' - 0"	1' - 9"	7' - 3"	2' - 4"	7	5	0' - 10"	7' - 0"	5' - 6"	6	4	5	4	8	7' - 0"	4	11	4760	6360

VERTICAL CANTILEVER T-TYPE WINGWALLS, DESIGN HEIGHT H_D = 15'-0"

FILL	BACKSLOPE	STEM		FOOTING			n(E) BARS					v_i BAR	t_t BAR		t_b BAR		t_t, t_b BAR	w BAR		BEARING PRESSURE	
HEIGHT	ANGLE	T	T_1	T_f	b	X	SIZE	SPC.	A	B	C	SIZE	SIZE	SPC.	SIZE	SPC.	LENGTH	SIZE	SPC.	SERVICE I	STRENGTH I
ft.	degrees	ft. - in.	ft. - in.	ft. - in.	ft. - in.	ft. - in.	#	in.	ft. - in.	ft. - in.	ft. - in.	#	#	in.	#	in.	ft. - in.	#	in.	psf	psf
0	0	1' - 0"	1' - 0"	1' - 9"	8' - 0"	2' - 8"	7	7	0' - 10"	5' - 11"	4' - 5"	6	4	9	4	10	7' - 9"	4	11	2650	3530
2.5	5	1' - 0"	1' - 0"	1' - 9"	7' - 7"	2' - 6"	7	7	0' - 10"	5' - 11"	4' - 5"	6	4	8	4	10	7' - 4"	4	11	2940	3950
5	9	1' - 0"	1' - 0"	1' - 9"	7' - 6"	2' - 6"	7	6	0' - 10"	5' - 11"	4' - 5"	6	4	8	4	10	7' - 3"	4	11	3370	4320
7.5	14	1' - 0"	1' - 0"	1' - 9"	7' - 4"	2' - 5"	7	6	0' - 10"	5' - 11"	4' - 5"	6	4	7	4	10	7' - 1"	4	11	3680	4870
10	18	1' - 0"	1' - 0"	1' - 9"	7' - 4"	2' - 5"	7	6	0' - 10"	5' - 11"	4' - 5"	6	4	6	4	9	7' - 1"	4	11	3950	5100
12.5	23	1' - 0"	1' - 0"	1' - 9"	7' - 4"	2' - 5"	7	5	0' - 10"	7' - 0"	5' - 6"	6	4	5	4	8	7' - 1"	4	11	4450	5960
≥ 15	26.56	1' - 0"	1' - 1"	1' - 9"	7' - 9"	2' - 7"	7	5	0' - 10"	7' - 0"	5' - 6"	6	5	6	4	8	7' - 6"	4	11	4530	6320

VERTICAL CANTILEVER T-TYPE WINGWALLS, DESIGN HEIGHT H_D = 15'-6"

FILL	BACKSLOPE	STEM		FOOTING			n(E) BARS					v_i BAR	t_t BAR		t_b BAR		t_t t_b BAR	w BAR		BEARING PRESSURE	
HEIGHT	ANGLE	T	T_1	T_f	b	X	SIZE	SPC.	A	B	C	SIZE	SIZE	SPC.	SIZE	SPC.	LENGTH	SIZE	SPC.	SERVICE I	STRENGTH I
ft.	degrees	ft. - in.	ft. - in.	ft. - in.	ft. - in.	ft. - in.	#	in.	ft. - in.	ft. - in.	ft. - in.	#	#	in.	#	in.	ft. - in.	#	in.	psf	psf
0	0	1' - 0"	1' - 0"	1' - 9"	8' - 4"	2' - 9"	7	7	0' - 10"	5' - 11"	4' - 5"	6	4	8	4	10	8' - 1"	4	11	2700	3500
2.5	5	1' - 0"	1' - 0"	1' - 9"	7' - 11"	2' - 7"	7	6	0' - 10"	5' - 11"	4' - 5"	6	4	8	4	9	7' - 8"	4	11	3260	4150
5	9	1' - 0"	1' - 0"	1' - 9"	7' - 9"	2' - 6"	7	6	0' - 10"	5' - 11"	4' - 5"	6	4	7	4	9	7' - 6"	4	11	3490	4500
7.5	14	1' - 0"	1' - 0"	1' - 9"	7' - 8"	2' - 6"	7	6	0' - 10"	5' - 11"	4' - 5"	6	4	6	4	9	7' - 5"	4	11	3720	4780
10	18	1' - 0"	1' - 0"	1' - 9"	7' - 7"	2' - 6"	7	5	0' - 10"	7' - 0"	5' - 6"	6	4	6	4	9	7' - 4"	4	11	4010	5220
12.5	22	1' - 0"	1' - 1"	1' - 9"	7' - 7"	2' - 6"	7	5	0' - 10"	7' - 0"	5' - 6"	6	4	5	4	8	7' - 4"	4	11	4170	5600
≥ 15	26	1' - 0"	1' - 2"	1' - 9"	8' - 0"	2' - 8"	7	5	0' - 10"	7' - 0"	5' - 6"	6	5	6	4	7	7' - 9"	4	11	4650	6470

VERTICAL CANTILEVER T-TYPE WINGWALLS, DESIGN HEIGHT H_D = 16'-0"

FILL	BACKSLOPE	STEM		FOOTING			n(E) BARS					v_i BAR	t_t BAR		t_b BAR		t_t t_b BAR	w BAR		BEARING PRESSURE	
HEIGHT	ANGLE	T	T_1	T_f	b	X	SIZE	SPC.	A	B	C	SIZE	SIZE	SPC.	SIZE	SPC.	LENGTH	SIZE	SPC.	SERVICE I	STRENGTH I
ft.	degrees	ft. - in.	ft. - in.	ft. - in.	ft. - in.	ft. - in.	#	in.	ft. - in.	ft. - in.	ft. - in.	#	#	in.	#	in.	ft. - in.	#	in.	psf	psf
0	0	1' - 0"	1' - 0"	1' - 9"	8' - 7"	2' - 10"	7	6	0' - 10"	5' - 11"	4' - 5"	6	5	10	4	9	8' - 4"	4	11	2780	3650
2.5	4	1' - 0"	1' - 0"	1' - 9"	8' - 2"	2' - 8"	7	6	0' - 10"	5' - 11"	4' - 5"	6	5	9	4	9	7' - 11"	4	11	3340	4270
5	9	1' - 0"	1' - 0"	1' - 9"	8' - 0"	2' - 7"	7	6	0' - 10"	5' - 11"	4' - 5"	6	5	9	4	9	7' - 9"	4	11	3580	4660
7.5	13	1' - 0"	1' - 0"	1' - 9"	7' - 11"	2' - 7"	7	5	0' - 10"	7' - 0"	5' - 6"	6	5	8	4	9	7' - 8"	4	11	3800	4920
10	17	1' - 0"	1' - 0"	1' - 9"	7' - 10"	2' - 7"	7	5	0' - 10"	7' - 0"	5' - 6"	6	5	8	4	8	7' - 7"	4	11	4090	5360
12.5	21	1' - 0"	1' - 1"	1' - 9"	7' - 9"	2' - 7"	7	5	0' - 10"	7' - 0"	5' - 6"	6	5	7	4	8	7' - 6"	4	11	4530	6080
≥ 15	25	1' - 0"	1' - 4"	1' - 9"	8' - 2"	2' - 9"	7	5	0' - 10"	7' - 0"	5' - 6"	6	5	5	4	7	7' - 11"	4	11	4790	6710

VERTICAL CANTILEVER T-TYPE WINGWALLS, DESIGN HEIGHT H_D = 16'-6"

FILL	BACKSLOPE	STEM		FOOTING			n(E) BARS					v_i BAR	t_t BAR		t_b BAR		t_t t_b BAR	w BAR		BEARING PRESSURE	
HEIGHT	ANGLE	T	T_1	T_f	b	X	SIZE	SPC.	A	B	C	SIZE	SIZE	SPC.	SIZE	SPC.	LENGTH	SIZE	SPC.	SERVICE I	STRENGTH I
ft.	degrees	ft. - in.	ft. - in.	ft. - in.	ft. - in.	ft. - in.	#	in.	ft. - in.	ft. - in.	ft. - in.	#	#	in.	#	in.	ft. - in.	#	in.	psf	psf
0	0	1' - 0"	1' - 0"	1' - 9"	8' - 10"	2' - 11"	7	6	0' - 10"	5' - 11"	4' - 5"	6	5	10	4	9	8' - 7"	4	11	2860	3810
2.5	4	1' - 0"	1' - 0"	1' - 9"	8' - 5"	2' - 9"	7	5	0' - 10"	7' - 0"	5' - 6"	6	5	9	4	8	8' - 2"	4	11	3420	4400
5	9	1' - 0"	1' - 0"	1' - 9"	8' - 3"	2' - 9"	7	5	0' - 10"	7' - 0"	5' - 6"	6	5	8	4	8	8' - 0"	4	11	3630	4780
7.5	13	1' - 0"	1' - 0"	1' - 9"	8' - 2"	2' - 9"	7	5	0' - 10"	7' - 0"	5' - 6"	6	5	8	4	8	7' - 11"	4	11	3820	4990
10	17	1' - 0"	1' - 1"	1' - 9"	8' - 0"	2' - 7"	7	5	0' - 10"	7' - 0"	5' - 6"	6	5	7	4	8	7' - 9"	4	11	4240	5670
12.5	21	1' - 0"	1' - 2"	1' - 9"	8' - 0"	2' - 7"	7	5	0' - 10"	7' - 0"	5' - 6"	6	5	7	4	7	7' - 9"	4	11	4600	6070
15	24	1' - 0"	1' - 4"	1' - 9"	8' - 5"	2' - 10"	7	5	0' - 10"	7' - 0"	5' - 6"	6	5	5	4	6	8' - 2"	4	11	4830	6710
≥ 17.5	26.56	1' - 0"	1' - 5"	1' - 9"	8' - 5"	2' - 10"	7	5	0' - 10"	7' - 0"	5' - 6"	6	5	5	4	6	8' - 2"	4	11	4910	6880

VERTICAL CANTILEVER T-TYPE WINGWALLS, DESIGN HEIGHT H_D = 17'-0"

FILL	BACKSLOPE	STEM		FOOTING			n(E) BARS					v_i BAR	t_t BAR		t_b BAR		t_t, t_b BAR	w BAR		BEARING PRESSURE	
HEIGHT	ANGLE	T	T_1	T_f	b	X	SIZE	SPC.	A	B	C	SIZE	SIZE	SPC.	SIZE	SPC.	LENGTH	SIZE	SPC.	SERVICE I	STRENGTH I
ft.	degrees	ft. - in.	ft. - in.	ft. - in.	ft. - in.	ft. - in.	#	in.	ft. - in.	ft. - in.	ft. - in.	#	#	in.	#	in.	ft. - in.	#	in.	psf	psf
0	0	1' - 0"	1' - 0"	1' - 11"	9' - 1"	3' - 0"	8	6	0' - 11"	6' - 9"	5' - 1"	7	5	10	4	9	8' - 10"	4	10	2980	3980
2.5	4	1' - 0"	1' - 0"	1' - 11"	8' - 8"	2' - 11"	8	6	0' - 11"	6' - 9"	5' - 1"	7	5	9	4	8	8' - 5"	4	10	3480	4540
5	8	1' - 0"	1' - 0"	1' - 11"	8' - 6"	2' - 11"	8	6	0' - 11"	6' - 9"	5' - 1"	7	5	9	4	8	8' - 3"	4	10	3680	4900
7.5	12	1' - 0"	1' - 0"	1' - 11"	8' - 5"	2' - 9"	8	6	0' - 11"	6' - 9"	5' - 1"	7	5	8	4	8	8' - 2"	4	10	3960	5170
10	16	1' - 0"	1' - 1"	1' - 11"	8' - 3"	2' - 9"	8	6	0' - 11"	6' - 9"	5' - 1"	7	5	8	4	8	8' - 0"	4	10	4270	5710
12.5	20	1' - 0"	1' - 2"	1' - 11"	8' - 3"	2' - 9"	8	6	0' - 11"	6' - 9"	5' - 1"	7	5	7	4	8	8' - 0"	4	10	4620	6110
15	24	1' - 0"	1' - 4"	1' - 11"	8' - 8"	2' - 10"	8	6	0' - 11"	6' - 9"	5' - 1"	7	5	5	4	7	8' - 5"	4	10	4890	6720
≥ 17.5	26.56	1' - 0"	1' - 5"	1' - 11"	8' - 8"	2' - 11"	8	6	0' - 11"	6' - 9"	5' - 1"	7	5	5	4	6	8' - 5"	4	10	5070	7120

VERTICAL CANTILEVER T-TYPE WINGWALLS, DESIGN HEIGHT H_D = 17'-6"

FILL	BACKSLOPE	STEM		FOOTING			n(E) BARS					v_i BAR	t_t BAR		t_b BAR		t_t, t_b BAR	w BAR		BEARING PRESSURE	
HEIGHT	ANGLE	T	T_1	T_f	b	X	SIZE	SPC.	A	B	C	SIZE	SIZE	SPC.	SIZE	SPC.	LENGTH	SIZE	SPC.	SERVICE I	STRENGTH I
ft.	degrees	ft. - in.	ft. - in.	ft. - in.	ft. - in.	ft. - in.	#	in.	ft. - in.	ft. - in.	ft. - in.	#	#	in.	#	in.	ft. - in.	#	in.	psf	psf
0	0	1' - 0"	1' - 0"	1' - 11"	9' - 4"	3' - 0"	8	6	0' - 11"	6' - 9"	5' - 1"	7	5	9	4	9	9' - 1"	4	10	3090	4140
2.5	4	1' - 0"	1' - 0"	1' - 11"	8' - 11"	2' - 11"	8	6	0' - 11"	6' - 9"	5' - 1"	7	5	8	4	8	8' - 8"	4	10	3610	4700
5	8	1' - 0"	1' - 0"	1' - 11"	8' - 11"	2' - 11"	8	6	0' - 11"	6' - 9"	5' - 1"	7	5	8	4	8	8' - 8"	4	10	3610	4700
7.5	12	1' - 0"	1' - 2"	1' - 11"	8' - 7"	2' - 10"	8	6	0' - 11"	6' - 9"	5' - 1"	7	5	8	4	8	8' - 4"	4	10	4090	5460
10	16	1' - 0"	1' - 2"	1' - 11"	8' - 6"	2' - 10"	8	6	0' - 11"	6' - 9"	5' - 1"	7	5	7	4	8	8' - 3"	4	10	4340	5800
12.5	20	1' - 0"	1' - 2"	1' - 11"	8' - 6"	2' - 10"	8	6	0' - 11"	6' - 9"	5' - 1"	7	5	6	4	7	8' - 3"	4	10	4650	6160
15	23	1' - 0"	1' - 4"	1' - 11"	8' - 10"	2' - 11"	8	6	0' - 11"	6' - 9"	5' - 1"	7	5	5	4	7	8' - 7"	4	10	4900	6810
≥ 17.5	26.56	1' - 0"	1' - 6"	1' - 11"	8' - 11"	3' - 0"	8	6	0' - 11"	6' - 9"	5' - 1"	7	5	5	4	6	8' - 8"	4	10	5200	7270

VERTICAL CANTILEVER T-TYPE WINGWALLS, DESIGN HEIGHT H_D = 18'-0"

FILL	BACKSLOPE	STEM		FOOTING			n(E) BARS					v_i BAR	t_t BAR		t_b BAR		t_t, t_b BAR	w BAR		BEARING PRESSURE	
HEIGHT	ANGLE	T	T_1	T_f	b	X	SIZE	SPC.	A	B	C	SIZE	SIZE	SPC.	SIZE	SPC.	LENGTH	SIZE	SPC.	SERVICE I	STRENGTH I
ft.	degrees	ft. - in.	ft. - in.	ft. - in.	ft. - in.	ft. - in.	#	in.	ft. - in.	ft. - in.	ft. - in.	#	#	in.	#	in.	ft. - in.	#	in.	psf	psf
0	0	1' - 0"	1' - 0"	1' - 11"	9' - 8"	3' - 2"	8	6	0' - 11"	6' - 9"	5' - 1"	7	5	8	4	8	9' - 5"	4	10	3110	4100
2.5	4	1' - 0"	1' - 1"	1' - 11"	9' - 2"	3' - 1"	8	6	0' - 11"	6' - 9"	5' - 1"	7	5	8	4	8	8' - 11"	4	10	3640	4790
5	8	1' - 0"	1' - 1"	1' - 11"	9' - 0"	3' - 0"	8	6	0' - 11"	6' - 9"	5' - 1"	7	5	8	4	8	8' - 9"	4	10	3890	5170
7.5	12	1' - 0"	1' - 2"	1' - 11"	8' - 11"	3' - 0"	8	6	0' - 11"	6' - 9"	5' - 1"	7	5	7	4	7	8' - 8"	4	10	4060	5280
10	16	1' - 0"	1' - 2"	1' - 11"	8' - 9"	2' - 11"	8	6	0' - 11"	6' - 9"	5' - 1"	7	5	7	4	7	8' - 6"	4	10	4400	5890
12.5	19	1' - 0"	1' - 3"	1' - 11"	8' - 8"	2' - 11"	8	6	0' - 11"	6' - 9"	5' - 1"	7	5	6	4	7	8' - 5"	4	10	4740	6410
15	23	1' - 0"	1' - 5"	1' - 11"	8' - 8"	2' - 11"	8	6	0' - 11"	6' - 9"	5' - 1"	7	5	5	4	6	8' - 5"	4	10	5220	7050
≥ 17.5	26.56	1' - 0"	1' - 7"	1' - 11"	9' - 2"	3' - 0"	8	6	0' - 11"	6' - 9"	5' - 1"	7	6	6	4	6	8' - 11"	4	10	5380	7520

VERTICAL CANTILEVER T-TYPE WINGWALLS, DESIGN HEIGHT H_D = 18'-6"

FILL	BACKSLOPE	STEM		FOOTING			n(E) BARS					v_i BAR	t_t BAR		t_b BAR		t_t, t_b BAR	w BAR		BEARING PRESSURE	
HEIGHT	ANGLE	T	T_1	T_f	b	X	SIZE	SPC.	A	B	C	SIZE	SIZE	SPC.	SIZE	SPC.	LENGTH	SIZE	SPC.	SERVICE I	STRENGTH I
ft.	degrees	ft. - in.	ft. - in.	ft. - in.	ft. - in.	ft. - in.	#	in.	ft. - in.	ft. - in.	ft. - in.	#	#	in.	#	in.	ft. - in.	#	in.	psf	psf
0	0	1' - 0"	1' - 2"	2' - 1"	10' - 0"	3' - 4"	9	7	1' - 3"	7' - 6"	5' - 8"	8	6	10	4	6	9' - 9"	4	9	3230	4310
2.5	4	1' - 0"	1' - 2"	2' - 1"	9' - 5"	3' - 1"	9	7	1' - 3"	7' - 6"	5' - 8"	8	6	10	4	8	9' - 2"	4	9	3760	4880
5	8	1' - 0"	1' - 2"	2' - 1"	9' - 3"	3' - 1"	9	7	1' - 3"	7' - 6"	5' - 8"	8	6	10	4	8	9' - 0"	4	9	3960	5230
7.5	11	1' - 0"	1' - 2"	2' - 1"	9' - 2"	3' - 1"	9	7	1' - 3"	7' - 6"	5' - 8"	8	6	9	4	7	8' - 11"	4	9	4150	5420
10	15	1' - 0"	1' - 2"	2' - 1"	9' - 0"	3' - 0"	9	6	1' - 3"	7' - 6"	5' - 8"	8	6	8	4	7	8' - 9"	4	9	4510	6070
12.5	19	1' - 0"	1' - 2"	2' - 1"	9' - 0"	3' - 0"	9	6	1' - 3"	7' - 6"	5' - 8"	8	6	8	4	7	8' - 9"	4	9	4790	6340
15	22	1' - 0"	1' - 4"	2' - 1"	9' - 4"	3' - 1"	9	6	1' - 3"	7' - 6"	5' - 8"	8	6	7	4	7	9' - 1"	4	9	4950	6880
≥ 17.5	26.56	1' - 0"	1' - 6"	2' - 1"	9' - 6"	3' - 2"	9	6	1' - 3"	7' - 6"	5' - 8"	8	6	6	4	6	9' - 3"	4	9	5440	7540

VERTICAL CANTILEVER T-TYPE WINGWALLS, DESIGN HEIGHT H_D = 19'-0"

FILL	BACKSLOPE	STEM		FOOTING			n(E) BARS					v_i BAR	t_t BAR		t_b BAR		t_t, t_b BAR	w BAR		BEARING PRESSURE	
HEIGHT	ANGLE	T	T_1	T_f	b	X	SIZE	SPC.	A	B	C	SIZE	SIZE	SPC.	SIZE	SPC.	LENGTH	SIZE	SPC.	SERVICE I	STRENGTH I
ft.	degrees	ft. - in.	ft. - in.	ft. - in.	ft. - in.	ft. - in.	#	in.	ft. - in.	ft. - in.	ft. - in.	#	#	in.	#	in.	ft. - in.	#	in.	psf	psf
0	0	1' - 0"	1' - 4"	2' - 1"	10' - 2"	3' - 4"	9	8	1' - 3"	7' - 6"	5' - 8"	8	6	10	4	8	9' - 11"	4	9	3320	4410
2.5	4	1' - 0"	1' - 4"	2' - 1"	9' - 8"	3' - 3"	9	8	1' - 3"	7' - 6"	5' - 8"	8	6	10	4	7	9' - 5"	4	9	3820	5020
5	7	1' - 0"	1' - 4"	2' - 1"	9' - 6"	3' - 2"	9	7	1' - 3"	7' - 6"	5' - 8"	8	6	9	4	7	9' - 3"	4	9	4050	5290
7.5	11	1' - 0"	1' - 4"	2' - 1"	9' - 4"	3' - 1"	9	7	1' - 3"	7' - 6"	5' - 8"	8	6	9	4	7	9' - 1"	4	9	4300	5680
10	15	1' - 0"	1' - 4"	2' - 1"	9' - 3"	3' - 1"	9	7	1' - 3"	7' - 6"	5' - 8"	8	6	9	4	7	9' - 0"	4	9	4560	6030
12.5	18	1' - 0"	1' - 4"	2' - 1"	9' - 2"	3' - 0"	9	6	1' - 3"	7' - 6"	5' - 8"	8	6	8	4	7	8' - 11"	4	9	4920	6570
15	22	1' - 0"	1' - 4"	2' - 1"	9' - 7"	3' - 2"	9	6	1' - 3"	7' - 6"	5' - 8"	8	6	6	4	6	9' - 4"	4	9	4970	6900
≥ 17.5	26.56	1' - 0"	1' - 7"	2' - 1"	9' - 8"	3' - 3"	9	6	1' - 3"	7' - 6"	5' - 8"	8	6	6	4	6	9' - 5"	4	9	5620	7960

VERTICAL CANTILEVER T-TYPE WINGWALLS, DESIGN HEIGHT H_D = 19'-6"

FILL	BACKSLOPE	STEM		FOOTING			n(E) BARS					v_i BAR	t_t BAR		t_b BAR		t_t, t_b BAR	w BAR		BEARING PRESSURE	
HEIGHT	ANGLE	T	T_1	T_f	b	X	SIZE	SPC.	A	B	C	SIZE	SIZE	SPC.	SIZE	SPC.	LENGTH	SIZE	SPC.	SERVICE I	STRENGTH I
ft.	degrees	ft. - in.	ft. - in.	ft. - in.	ft. - in.	ft. - in.	#	in.	ft. - in.	ft. - in.	ft. - in.	#	#	in.	#	in.	ft. - in.	#	in.	psf	psf
0	0	1' - 0"	1' - 4"	2' - 1"	10' - 6"	3' - 6"	9	7	1' - 3"	7' - 6"	5' - 8"	8	6	10	4	7	10' - 3"	4	9	3340	4380
2.5	4	1' - 0"	1' - 4"	2' - 1"	9' - 11"	3' - 4"	9	7	1' - 3"	7' - 6"	5' - 8"	8	6	9	4	7	9' - 8"	4	9	3670	4940
5	7	1' - 0"	1' - 4"	2' - 1"	9' - 9"	3' - 3"	9	7	1' - 3"	7' - 6"	5' - 8"	8	6	9	4	7	9' - 6"	4	9	3880	5220
7.5	11	1' - 0"	1' - 4"	2' - 1"	9' - 7"	3' - 2"	9	7	1' - 3"	7' - 6"	5' - 8"	8	6	8	4	7	9' - 4"	4	9	4170	5690
10	14	1' - 0"	1' - 4"	2' - 1"	9' - 6"	3' - 2"	9	6	1' - 3"	7' - 6"	5' - 8"	8	6	8	4	7	9' - 3"	4	9	4400	5970
12.5	18	1' - 0"	1' - 4"	2' - 1"	9' - 5"	3' - 1"	9	6	1' - 3"	7' - 6"	5' - 8"	8	6	8	4	7	9' - 2"	4	9	4770	6500
15	21	1' - 0"	1' - 5"	2' - 1"	9' - 10"	3' - 3"	9	6	1' - 3"	7' - 6"	5' - 8"	8	6	6	4	6	9' - 7"	4	9	4760	6690
17.5	24	1' - 0"	1' - 7"	2' - 1"	9' - 11"	3' - 4"	9	6	1' - 3"	7' - 6"	5' - 8"	8	6	5	4	6	9' - 8"	4	9	5310	7540
≥ 20	26.56	1' - 0"	1' - 8"	2' - 1"	9' - 11"	3' - 4"	9	6	1' - 3"	7' - 6"	5' - 8"	8	6	5	4	5	9' - 8"	4	9	5730	8110

4.4.3 Design Example

Given: Design Height (H_D) = 15'-6"

Backslope Angle (B) = 3.8^o

The backslope angle falls between the 2.5^o and 5° lines in the design table. The required footing width for 2.5^o backslope is 7'-11". The required footing width for a 5° backslope is 7'-9". Therefore, use the design for 2.5^o backslope condition.

Dimensions:

- Stem thickness at top = T = 1'-0"
- Stem thickness at bottom = T_1 = 1'-0"
- Footing thickness = T_f = 1'-9"
- Footing width = B = 7'-11"
- Toe dimension = X = 2'-7"

Stem Reinforcement:

- n(E) bars #7 @ 6" cts.
- vi bars #6 @ 6" cts.

Footing Reinforcement:

- t bars #4 at 8" cts. Heel (top)
- t bars #4 at 9" cts. toe (bottom)
- Length 7'-11"

Applied Equivalent Uniform Strength I Bearing Pressure: 4150 psf.

Compare this pressure with the factored bearing resistance of the foundation soils. If the resistance of the soil is less than the applied Strength I bearing pressure given in the table, the wingwall should then be considered a special structural design problem, and, therefore, submitted to the Bureau of Bridges and Structures for analysis.

The maximum Service I bearing pressure of 2450 psf (Q_{max}) should be shown on the plans.

Section 5 Design Aids

5.1 General

REINFORCEMENT BARS
AREAS, WEIGHTS, PERIMETERS & SPACING PER ONE FT. SECTION

Size	Area Sq. in.	Wt. per ft. Lbs.	AREAS - As, given in **bold** type (top) in sq. inches. PERIMETERS - Σo, given in light type (bottom) in inches.													
			4"	4½"	5"	5½"	6"	6½"	7"	7½"	8"	8½"	9"	10"	11"	12"
2	.0490	.167	**.147**	**.131**	**.118**	**.107**	**.098**	**.090**	**.084**	**.078**	**.074**	**.069**	**.065**	**.059**	**.053**	**.049**
			2.36	2.10	1.89	1.71	1.57	1.45	1.35	1.26	1.18	1.11	1.05	.943	.858	.786
3	.1104	.376	**.33**	**.29**	**.27**	**.24**	**.22**	**.20**	**.19**	**.18**	**.17**	**.16**	**.15**	**.13**	**.12**	**.11**
			3.54	3.14	2.83	2.57	2.36	2.18	2.02	1.89	1.77	1.66	1.57	1.41	1.29	1.18
4	.1963	.668	**.59**	**.52**	**.47**	**.43**	**.39**	**.36**	**.34**	**.31**	**.29**	**.28**	**.26**	**.24**	**.21**	**.20**
			4.71	4.19	3.77	3.43	3.14	2.90	2.69	2.51	2.36	2.22	2.09	1.88	1.71	1.57
5	.3068	1.043	**.92**	**.82**	**.74**	**.67**	**.61**	**.57**	**.53**	**.49**	**.46**	**.43**	**.41**	**.37**	**.33**	**.31**
			5.89	5.24	4.71	4.28	3.93	3.62	3.36	3.14	2.94	2.77	2.62	2.36	2.14	1.96
6	.4418	1.502	**1.32**	**1.18**	**1.06**	**.96**	**.88**	**.82**	**.76**	**.71**	**.66**	**.62**	**.59**	**.53**	**.48**	**.44**
			7.07	6.28	5.66	5.14	4.71	4.35	4.04	3.77	3.53	3.33	3.14	2.83	2.57	2.36
7	.6013	2.044	**1.80**	**1.60**	**1.44**	**1.31**	**1.20**	**1.11**	**1.03**	**.96**	**.90**	**.85**	**.80**	**.72**	**.66**	**.60**
			8.25	7.33	6.60	6.00	5.50	5.07	4.71	4.40	4.12	3.88	3.67	3.30	3.00	2.75
8	.7854	2.670	**2.36**	**2.09**	**1.88**	**1.71**	**1.57**	**1.45**	**1.35**	**1.26**	**1.18**	**1.11**	**1.05**	**.94**	**.86**	**.79**
			9.42	8.38	7.54	6.86	6.28	5.80	5.39	5.03	4.71	4.44	4.19	3.77	3.43	3.14
9	1.000	3.400	**3.00**	**2.67**	**2.40**	**2.18**	**2.00**	**1.85**	**1.71**	**1.60**	**1.50**	**1.41**	**1.33**	**1.20**	**1.09**	**1.00**
			10.63	9.45	8.51	7.73	7.09	6.54	6.08	5.67	5.32	5.00	4.73	4.25	3.87	3.54
10	1.2667	4.303	**3.80**	**3.38**	**3.04**	**2.76**	**2.53**	**2.34**	**2.17**	**2.03**	**1.90**	**1.79**	**1.69**	**1.52**	**1.38**	**1.27**
			11.96	10.63	9.58	8.71	7.98	7.37	6.84	6.39	5.99	5.64	5.32	4.79	4.35	3.99
11	1.5615	5.313	**4.69**	**4.17**	**3.75**	**3.41**	**3.13**	**2.89**	**2.68**	**2.50**	**2.34**	**2.21**	**2.08**	**1.87**	**1.70**	**1.56**
			13.28	11.80	10.63	9.67	8.86	8.18	7.60	7.09	6.65	6.26	5.91	5.32	4.83	4.43

Figure 5.1-1

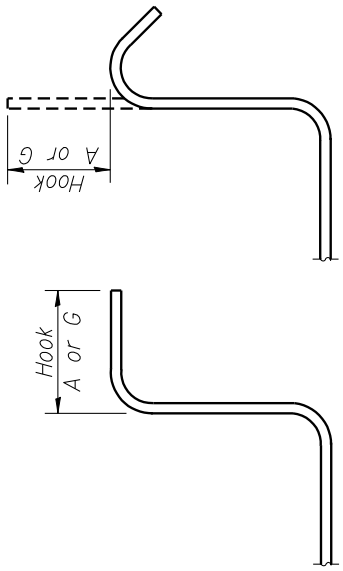

90° STIRRUP & TIE HOOKS

135° STIRRUP & TIE HOOKS

STIRRUP & TIE HOOKS

Grades 40-50-60 ksi

Bar Size	90° Hook Hook A or G	135° Hook Hook A or G
#4	$4\frac{1}{2}$"	$4\frac{1}{2}$"
#5	6"	$5\frac{1}{2}$"
#6	1'-0"	8"

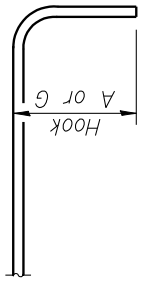

90° END HOOK

90° END HOOK

All Grades

Bar Size	Hook A or G
#4	8"
#5	10"
#6	1'-0"
#7	1'-2"
#8	1'-4"
#9	1'-7"
#10	1'-10"
#11	2'-0"
#14	2'-7"
#18	3'-5"

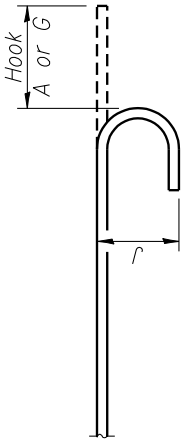

180° END HOOK

180° END HOOK

All Grades

Bar Size	Hook A or G	J
#4	6"	4"
#5	7"	5"
#6	8"	6"
#7	10"	7"
#8	11"	8"
#9	1'-3"	$11\frac{3}{4}$"
#10	1'-5"	1'-$1\frac{1}{4}$"
#11	1'-7"	1'-$2\frac{3}{4}$"
#14	2'-3"	1'-$9\frac{3}{4}$"
#18	3'-0"	2'-$4\frac{1}{2}$"

REINFORCEMENT BAR
HOOK DIMENSIONS

Figure 5.1-2

Reinforcement Bar Splices
(for Coated and Uncoated Bars)

Tension Splices

I. Regions of high tensile stress or
Reinforcement provided < twice that required for strength.

Use Class B splice

II. Regions of low tensile stress or
Reinforcement provided > twice that required for strength.

1. No more than 3/4 of the bars are lap spliced within a required lap length.
Use Class A splice

2. More than 3/4 of the bars are lap spliced within a required lap length.
Use Class B splice

III. Assume all temperature and shrinkage reinforcement fully stressed. A Class B splice must be used depending on amount spliced within required splice length.

Tension Splices for Epoxy Coated Reinforcement in Normal Weight Concrete

(f'c = 3,500psi; fy = 60,000psi)

Basic Lap					
Bar Size	Min. Cover	Class A (1.0 l_d)		Class B (1.3 l_d)	
		s < 6" cts.	s ≥ 6" cts.	s < 6" cts.	s ≥ 6" cts.
#4	1"	2'-0"	2'-0"	2'-7"	2'-7"
#5	1.5"	2'-7"	2'-5"	3'-4"	3'-2"
	1"	2'-11"	2'-11"	3'-9"	3'-9"
#6	1.5"	3'-8"	2'-11"	4'-9"	3'-10"
	1"	4'-0"	4'-0"	5'-2"	5'-2"
#7	2"	4'-3"	3'-5"	5'-6"	4'-5"
	1.5"	4'-3"	3'-10"	5'-6"	5'-0"
	1"	5'-2"	5'-2"	6'-8"	6'-8"
#8	2"	5'-6"	3'-11"	7'-2"	5'-1"
	1.5"	5'-6"	4'-10"	7'-2"	6'-4"
	1"	6'-5"	6'-5"	8'-5"	8'-5"
#9	2.5"	7'-0"	4'-5"	9'-2"	5'-8"
	2"	7'-0"	4'-10"	9'-2"	6'-3"
	1.5"	7'-0"	6'-0"	9'-2"	7'-9"
	1"	7'-10"	7'-10"	10'-3"	10'-3"
#10	2.5"	7'-10"	5'-3"	10'-2"	6'-9"
	2"	7'-10"	5'-11"	10'-2"	7'-8"
	1.5"	7'-10"	7'-4"	10'-2"	9'-6"
	1"	9'-6"	9'-6"	12'-5"	12'-5"
#11	2.5"	9'-7"	6'-5"	12'-6"	8'-4"
	2"	9'-7"	7'-1"	12'-6"	9'-3"
	1.5"	9'-7"	8'-9"	12'-6"	11'-4"
	1"	11'-3"	11'-3"	14'-8"	14'-8"

Horizontal Lap w/>12" Concrete Cast Below					
Bar Size	Min. Cover	Class A (1.0 l_d)		Class B (1.3 l_d)	
		s < 6" cts.	s ≥ 6" cts.	s < 6" cts.	s ≥ 6" cts.
#4	1"	2'-3"	2'-3"	2'-11"	2'-11"
#5	1.5"	2'-11"	2'-9"	3'-9"	3'-7"
	1"	3'-3"	3'-3"	4'-3"	4'-3"
#6	1.5"	4'-2"	3'-4"	5'-4"	4'-4"
	1"	4'-6"	4'-6"	5'-10"	5'-10"
#7	2"	4'-10"	3'-10"	6'-3"	5'-0"
	1.5"	4'-10"	4'-4"	6'-3"	5'-8"
	1"	5'-10"	5'-10"	7'-7"	7'-7"
#8	2"	6'-3"	4'-5"	8'-2"	5'-9"
	1.5"	6'-3"	5'-6"	8'-2"	7'-2"
	1"	7'-4"	7'-4"	9'-6"	9'-6"
#9	2.5"	8'-0"	5'-0"	10'-4"	6'-5"
	2"	8'-0"	5'-5"	10'-4"	7'-1"
	1.5"	8'-0"	6'-9"	10'-4"	8'-9"
	1"	8'-11"	8'-11"	11'-7"	11'-7"
#10	2.5"	8'-10"	5'-11"	11'-6"	7'-8"
	2"	8'-10"	6'-9"	11'-6"	8'-9"
	1.5"	8'-10"	8'-3"	11'-6"	10'-9"
	1"	10'-10"	10'-10"	14'-0"	14'-0"
#11	2.5"	10'-11"	7'-3"	14'-2"	9'-5"
	2"	10'-11"	8'-1"	14'-2"	10'-6"
	1.5"	10'-11"	9'-10"	14'-2"	12'-10"
	1"	12'-9"	12'-9"	16'-7"	16'-7"

Notes:

- Confinement reinforcement was conservatively assumed to be zero.
- Larger covers for the smaller bars were intentionally omitted because additional cover does not reduce the lap length.

Tension Splices for Unprotected Reinforcement in Normal Weight Concrete

(f'c = 3,500psi; fy = 60,000psi)

Basic Lap					
Bar Size	Min. Cover	Class A (1.0 l_d)		Class B (1.3 l_d)	
		s < 6" cts.	s ≥ 6" cts.	s < 6" cts.	s ≥ 6" cts.
#4	1"	1'-4"	1'-4"	1'-9"	1'-9"
#5	1.5"	1'-9"	1'-8"	2'-3"	2'-2"
	1"	1'-11"	1'-11"	2'-6"	2'-6"
#6	1.5"	2'-5"	2'-0"	3'-2"	2'-7"
	1"	2'-8"	2'-8"	3'-5"	3'-5"
#7	2"	2'-10"	2'-3"	3'-8"	3'-0"
	1.5"	2'-10"	2'-7"	3'-8"	3'-4"
	1"	3'-5"	3'-5"	4'-6"	4'-6"
#8	2"	3'-8"	2'-7"	4'-10"	3'-5"
	1.5"	3'-8"	3'-3"	4'-10"	4'-3"
	1"	4'-4"	4'-4"	5'-7"	5'-7"
#9	2.5"	4'-8"	2'-11"	6'-1"	3'-10"
	2"	4'-8"	3'-3"	6'-1"	4'-2"
	1.5"	4'-8"	4'-0"	6'-1"	5'-2"
	1"	5'-3"	5'-3"	6'-10"	6'-10"
#10	2.5"	5'-3"	3'-6"	6'-9"	4'-6"
	2"	5'-3"	4'-0"	6'-9"	5'-2"
	1.5"	5'-3"	4'-11"	6'-9"	6'-4"
	1"	6'-4"	6'-4"	8'-3"	8'-3"
#11	2.5"	6'-5"	4'-4"	8'-4"	5'-7"
	2"	6'-5"	4'-9"	8'-4"	6'-2"
	1.5"	6'-5"	5'-10"	8'-4"	7'-7"
	1"	7'-6"	7'-6"	9'-9"	9'-9"

Horizontal Lap w/>12" Concrete Cast Below					
Bar Size	Min. Cover	Class A (1.0 l_d)		Class B (1.3 l_d)	
		s < 6" cts.	s ≥ 6" cts.	s < 6" cts.	s ≥ 6" cts.
#4	1"	1'-9"	1'-9"	2'-3"	2'-3"
#5	1.5"	2'-3"	2'-2"	2'-10"	2'-9"
	1"	2'-6"	2'-6"	3'-3"	3'-3"
#6	1.5"	3'-2"	2'-7"	4'-1"	3'-4"
	1"	3'-5"	3'-5"	4'-6"	4'-6"
#7	2"	3'-8"	3'-0"	4'-9"	3'-10"
	1.5"	3'-8"	3'-4"	4'-9"	4'-4"
	1"	4'-6"	4'-6"	5'-10"	5'-10"
#8	2"	4'-10"	3'-5"	6'-3"	4'-5"
	1.5"	4'-10"	4'-3"	6'-3"	5'-6"
	1"	5'-7"	5'-7"	7'-3"	7'-3"
#9	2.5"	6'-1"	3'-10"	7'-11"	4'-11"
	2"	6'-1"	4'-2"	7'-11"	5'-5"
	1.5"	6'-1"	5'-2"	7'-11"	6'-9"
	1"	6'-10"	6'-10"	8'-10"	8'-10"
#10	2.5"	6'-9"	4'-6"	8'-9"	5'-10"
	2"	6'-9"	5'-2"	8'-9"	6'-8"
	1.5"	6'-9"	6'-4"	8'-9"	8'-3"
	1"	8'-3"	8'-3"	10'-9"	10'-9"
#11	2.5"	8'-4"	5'-7"	10'-10"	7'-3"
	2"	8'-4"	6'-2"	10'-10"	8'-0"
	1.5"	8'-4"	7'-7"	10'-10"	9'-10"
	1"	9'-9"	9'-9"	12'-8"	12'-8"

Notes:

- Confinement reinforcement was conservatively assumed to be zero.
- Larger covers for the smaller bars were intentionally omitted because additional cover does not reduce the lap length.

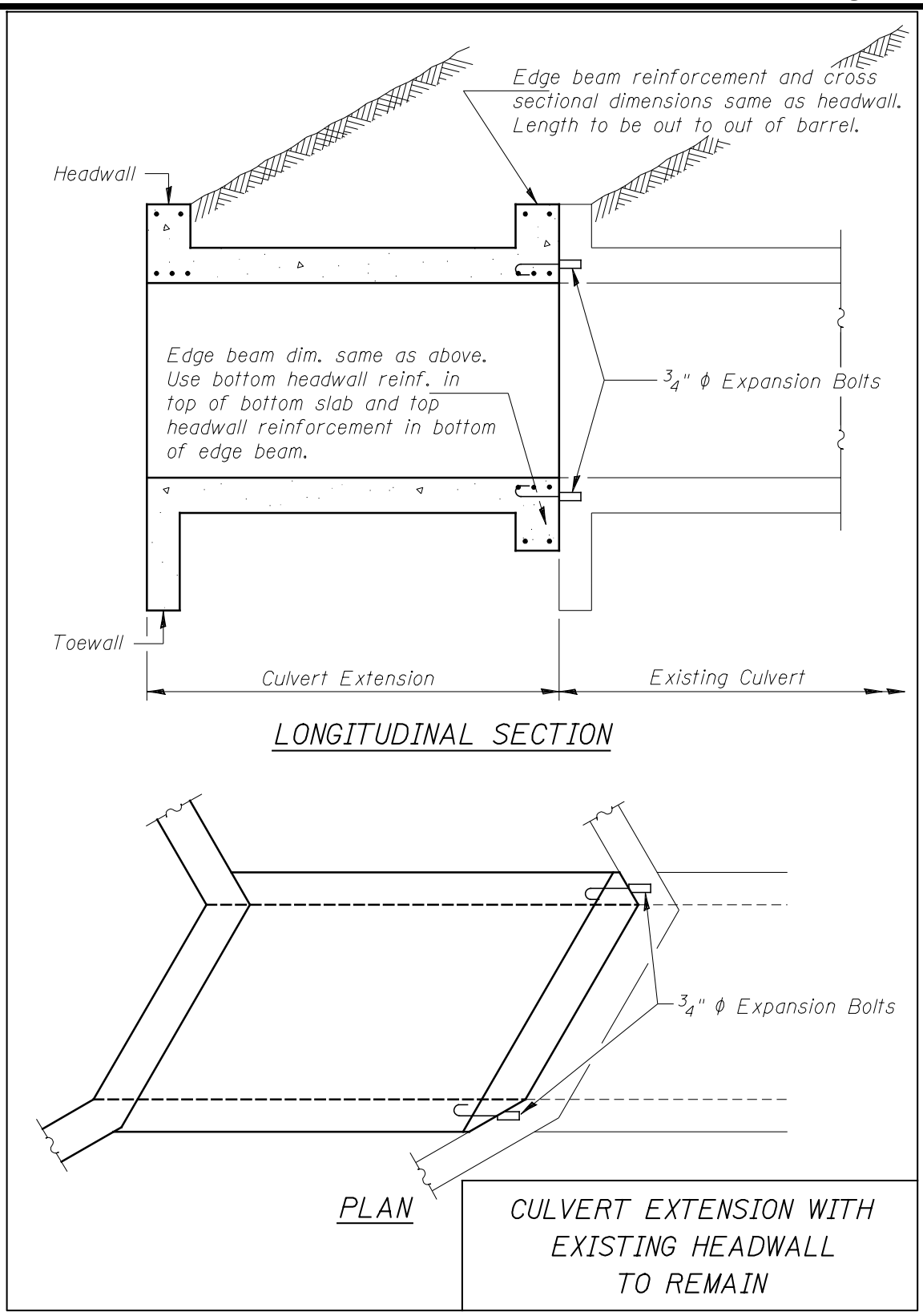
Edge beam reinforcement and cross sectional dimensions same as headwall. Length to be out to out of barrel.
Headwall
Edge beam dim. same as above. Use bottom headwall reinf. in top of bottom slab and top headwall reinforcement in bottom of edge beam.
3/4" ϕ Expansion Bolts
Toewall
Culvert Extension
Existing Culvert
LONGITUDINAL SECTION
3/4" ϕ Expansion Bolts
PLAN
CULVERT EXTENSION WITH EXISTING HEADWALL TO REMAIN

Figure 5.1-3

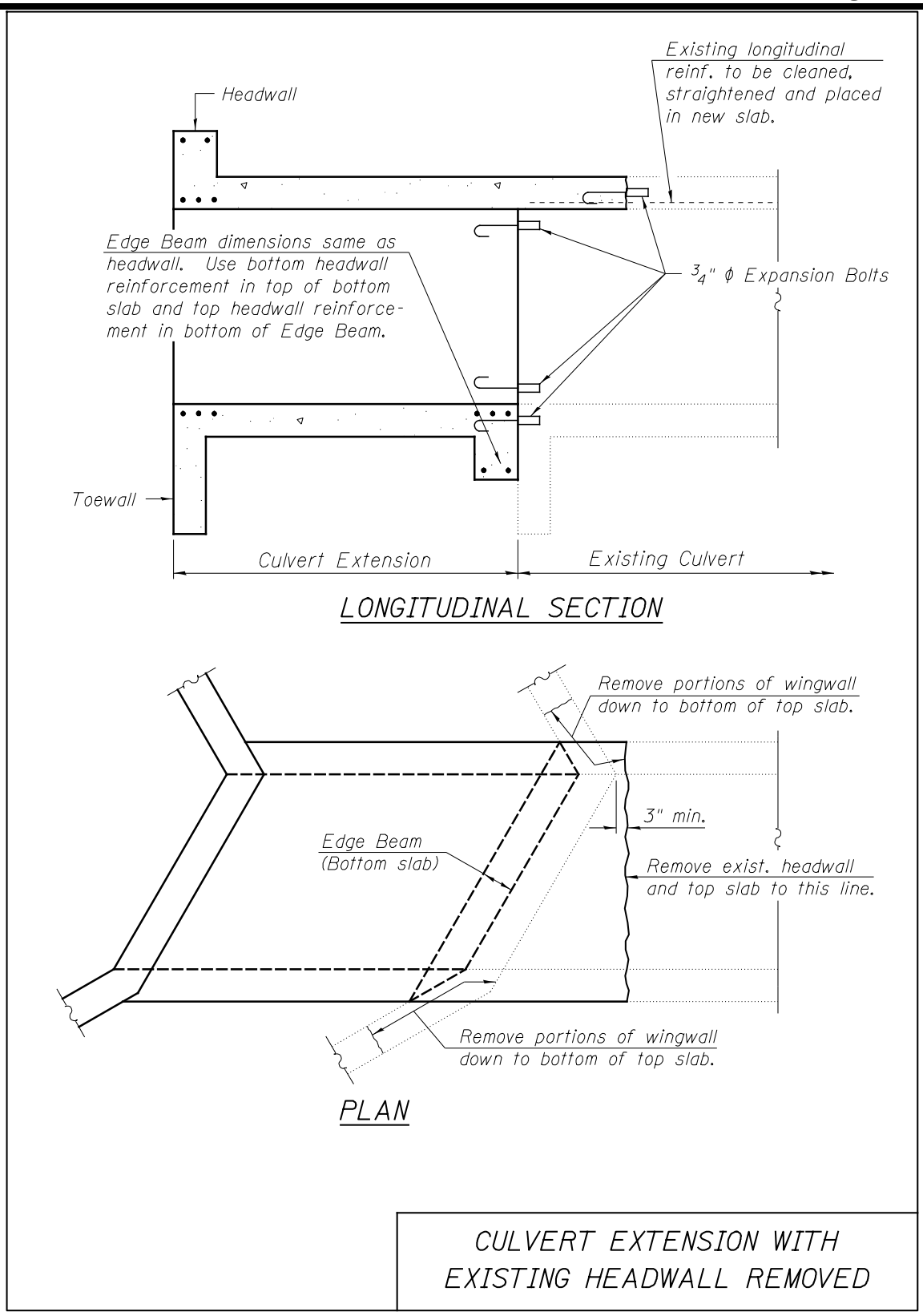
Existing longitudinal reinf. to be cleaned, straightened and placed in new slab.
Headwall
Edge Beam dimensions same as headwall. Use bottom headwall reinforcement in top of bottom slab and top headwall reinforcement in bottom of Edge Beam.
3/4" ϕ Expansion Bolts
Toewall
Culvert Extension
Existing Culvert
LONGITUDINAL SECTION
Remove portions of wingwall down to bottom of top slab.
3" min.
Edge Beam (Bottom slab)
Remove exist. headwall and top slab to this line.
Remove portions of wingwall down to bottom of top slab.
PLAN
CULVERT EXTENSION WITH EXISTING HEADWALL REMOVED

Figure 5.1-4

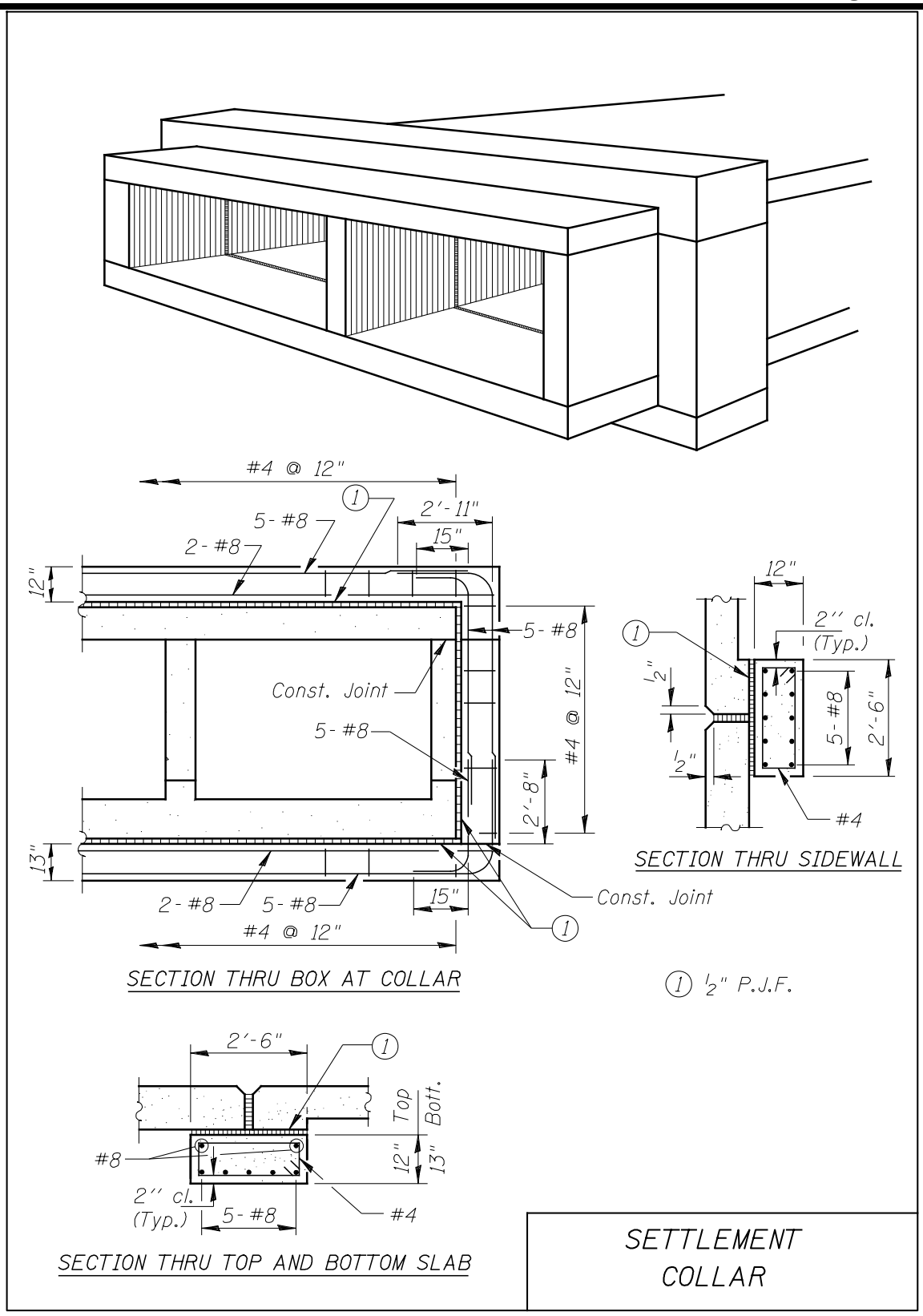
#4 @ 12"
1
2'-11"
15"
5-#8
2-#8
12"
5-#8
Const. Joint
5-#8
#4 @ 12"
2'-8"
13"
2-#8
5-#8
15"
Const. Joint
1
#4 @ 12"
SECTION THRU BOX AT COLLAR
1 1/2" P.J.F.
12"
2" cl.
(Typ.)
1
1/2"
5-#8
2'-6"
1/2"
#4
SECTION THRU SIDEWALL
2'-6"
1
Top
Bott.
#8
12"
13"
2" cl.
(Typ.)
5-#8
#4
SECTION THRU TOP AND BOTTOM SLAB
SETTLEMENT
COLLAR

Figure 5.1-5

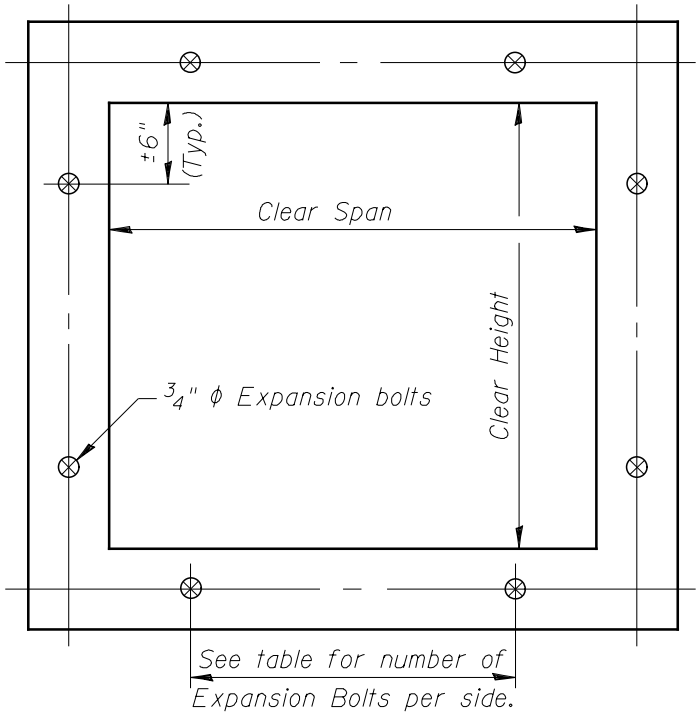

CROSS SECTION THRU BARREL

Note: (to be placed on the plans) Expansion bolts shall be 3/4" ϕ hooked bolts. Hooked bolts shall extend a minimum of 9" into new concrete.

Clear Span or Clear Height	No. of 3/4"ϕ Exp. Bolts Req'd per side			
	Extension ≤ 15'		Extension > 15'	
	No. *	Spacing	No. *	Spacing
2.0	**	**	**	**
2.5	2	18"	2	18"
3.0	2	24"	2	24"
4.0	3	18"	3	18"
5.0	4	16"	3	24"
6.0	5	15"	4	20"
7.0	5	18"	4	24"
8.0	6	17"	5	21"
9.0	6	19"	5	24"
10.0	7	18"	6	21"
11.0	8	17"	6	24"
12.0	8	19"	7	22"

Example:
6'x4' box culvert to be extended 18' at one end only.
From table find
6' side requires 4-3/4" ϕ Expansion bolts at 20" cts.
4' side requires 3-3/4" ϕ Expansion bolts at 18" cts.

Total Number required
(4+3)2 = 14-3/4" ϕ Expansion Bolts.

*Note: Expansion bolts based on non-skewed culverts.

**Note: Use minimum of one (1) Expansion bolt at each corner.

EXPANSION BOLTS REQUIRED FOR CULVERT EXTENSIONS

Figure 5.1-6

5.2 Base Sheets

Base sheets for culverts and end sections can be found at http://www.idot.illinois.gov/doing-business/procurements/engineering-architectural-professional-services/Consultants-Resources/bridges-and-structures-cadd-downloads-and-guidelines.