Structural Services Manual

State of Illinois
Illinois Department of Transportation

Illinois Department of Transportation

Printed by authority of the State of Illinois, 2015-0010, 0623-15, 02/15, 10

Structural Services Manual

Title Page

Prepared by:

Bureau of Bridges and Structures
Division of Highways

Agency:

Illinois Department of Transportation

Place of Publication:

Springfield Illinois

2015

STATE OF ILLINOIS DEPARTMENT OF TRANSPORTATION BUREAU OF BRIDGES AND STRUCTURES	**FILE CLASSIFICATION:** *Structural Services Manual*
	STRUCTURAL SERVICES MANUAL CHANGE LETTER NO. *15-01*
To: *All holders of the Structural Services Manual*	**DATE ISSUED:** *June 30, 2015*

Section 3 – "Inspection" and Section 4 – "Ratings and Permits" have been updated. Existing policies and procedures in Section 3 – "Inspection" have been expanded and clarified.

This Structural Services Manual revision includes several minor and editorial changes throughout the manual and some major changes as well. The following is a brief summary of some of the major changes:

Section 3 – "Inspection"

- Revised Section 3.1.3 "Illinois Bridge Inspection Organization" to explain IDOT's bridge inspection organization
- Section 3.3.10 "Complex Bridge Inspections" has been completely re-written. Tied Arch and Concrete Segmental bridges have been removed from the definition of Complex Bridges
- Section 3.3.12 "Critical Findings" has been completely re-written. Clarification and expansion of Inspection Interval policies, now in Section 3.4
- Removed Section 3.3.6.4 "Use of Special Inspection Procedures for Reporting and Monitoring Critical Findings". Special Inspection Type X – "Critical Finding" has been removed
- Section 3.3.9 "Load Rating Inspection" has been expanded to include load rating inspection policy and sections for state and local agency maintained structures
- Section 3.4.1 "Routine Inspection Interval" clarifies routine inspection intervals for new or re-opened structures

Section 4 – "Ratings and Permits"

Figure 4.4.4-2 "Illinois Posting Vehicles Semi-Trailer" has been revised. The front axle of the Type 3-S2-1 has been changed from "10k" to "9.1k".

The Structural Services Manual is now available for download on the IDOT website. **All IDOT approved Team Leaders and Program Managers are required to read and be familiar with Section 3 – "Inspection"**.

D. Carl Puzey
Acting Engineer of Bridges and Structures

CME/kktSSMCL15-01-20150630

SECTION 1 - REPAIRS

AUGUST 1999

Section 1 Repairs

Table of Contents

1.1 General 1.1-1

1.1.1 Purpose and Scope 1.1-1
1.1.2 General Notes 1.1-2

1.2 Plan Preparation and Review 1.2-1

1.2.1 Responsibilities 1.2-1
1.2.2 Preparation Procedures 1.2-2
1.2.3 Review Procedures 1.2-2

1.3 Inspections 1.3-1

1.3.1 Responsibilities 1.3-1
1.3.2 General Deterioration 1.3-1
1.3.3 Impact Damage - Steel Structures 1.3-5
1.3.4 Impact Damage - Concrete Structures 1.3-11
1.3.5 Inspection Photographs 1.3-14
1.3.6 Nondestructive Testing 1.3-14

1.4 Bridge Deck Overlays 1.4-1

1.4.1 Overlay Types 1.4-1
1.4.2 Bridge Condition Reports 1.4-1
1.4.3 Deck Patching 1.4-2
1.4.4 Effect on Structure 1.4-3
1.4.5 Bituminous Concrete Overlays 1.4-5
1.4.6 Microsilica ,Plasticized Dense or Latex Concrete Overlays 1.4-6
1.4.7 Reinforced Concrete Overlays 1.4-6
1.4.8 Overlaying Precast Superstructures 1.4-7

1.5 Expansion Joint Replacement 1.5-1

1.5.1 General 1.5-1
1.5.2 Joint Type Selection 1.5-1
1.5.3 Existing Armoring Steel 1.5-2
1.5.4 Concrete Deck on Multi-beam System 1.5-8
1.5.5 Reinforced Concrete Deck Girder 1.5-11
1.5.6 Reinforced Concrete Slab 1.5-15
1.5.7 Precast Prestressed Concrete Deck Beams 1.5-18
1.5.8 Concrete Removal Limits and Reinforcement Bar Lapping 1.5-23
1.5.9 Steel Finger Plate Joint 1.5-25
1.5.10 Existing Neoprene Joint 1.5-25

1.6 Longitudinal Joint Closure 1.6-1

1.6.1 General 1.6-1
1.6.2 Concrete Removal Limits 1.6-1
1.6.3 Reinforcement Bar Treatment 1.6-2
1.6.4 Diaphragms / Crossframes 1.6-9

1.7 Bridge Rails and Parapets 1.7-1

1.7.1 Project Requirements 1.7-1
1.7.2 Rail Retrofit on PPC Deck Beams 1.7-1
1.7.3 Rail Replacement on Trusses 1.7-1
1.7.4 Concrete Parapet Extensions 1.7-2
1.7.5 Parapet Repairs 1.7-9

1.8 Deck Drains 1.8-1

1.8.1 General 1.8-1
1.8.2 Drain Extensions 1.8-1
1.8.3 Drain Elimination 1.8-7
1.8.4 Drain Replacement 1.8-7

1.9 Bearing Replacements 1.9-1

1.9.1 Bearing Type Selection 1.9-1
1.9.2 Seismic Requirements 1.9-1
1.9.3 Existing Bearing Removal 1.9-1
1.9.4 Bearing Height Adjustment 1.9-3
1.9.5 Reinforced Concrete Slab Bearings 1.9-7
1.9.6 Reaction Table 1.9-10
1.9.7 Top Bearing Plate Adjustment 1.9-10
1.9.8 Anchor Bolts 1.9-10

1.10 Jacking and Cribbing 1.10-1

1.10.1 General 1.10-1
1.10.2 Traffic Staging 1.10-1
1.10.3 Jacking Synchronization 1.10-2
1.10.4 Jack Capacities 1.10-2
1.10.5 Jack Placement 1.10-3
1.10.6 Load Distribution 1.10-4

1.11 Pin and Link Replacement 1.11-1

1.11.1 General 1.11-1
1.11.2 Pin and Link Replacement 1.11-1
1.11.3 Pin and Link Elimination 1.11-2

1.12 Fatigue 1.12-1

1.12.1 General 1.12-1
1.12.2 Prerepair Procedures 1.12-2
1.12.3 Repair Considerations 1.12-2

1.13 Impact Repairs - Steel Beams 1.13-1

1.13.1 Determination of Repair Requirements 1.13-1
1.13.2 Beam Straightening and Strengthening.....1.13-5
1.13.3 Beam Replacement 1.13-12
1.13.4 Top Flange to Deck Slab Repairs.....1.13-21

1.14 Impact Repairs - Concrete Beams 1.14-1

1.14.1 General.....1.14-1
1.14.2 Preloading 1.14-1
1.14.3 Repair Procedures.....1.14-2

1.15 Steel Superstructure Repairs 1.15-1

1.15.1 General.....1.15-1
1.15.2 Beam and Girder Repairs.....1.15-2
1.15.3 Stringer and Floorbeam Repairs.....1.15-9
1.15.4 Construction Damage.....1.15-17

1.16 Concrete Superstructure Repairs 1.16-1

1.16.1 General.....1.16-1
1.16.2 Beam End Repairs 1.16-1
1.16.3 PPC Deck Beam Repairs - General 1.16-1
1.16.4 Keyway Repairs.....1.16-2
1.16.5 Bearing Pad Adjustment.....1.16-5
1.16.6 Dowel Hole and Grout Joint Repairs 1.16-5
1.16.7 PPC Deck Beam Repair and Replacement.....1.16-5
1.16.8 RC Deck Girder Replacement 1.16-6

1.17 Substructure Repairs 1.17-1

1.17.1 General.....1.17-1
1.17.2 Crack Sealing 1.17-3
1.17.3 Mortar Repairs.....1.17-5
1.17.4 Formed Concrete Repairs 1.17-5
1.17.5 Pneumatically Placed Mortar.....1.17-6
1.17.6 Retaining Wall Replacement 1.17-6
1.17.7 Abutment Wall Movement.....1.17-9

Section 1 Repairs

Table of Figures

1.3 Inspections ***1.3-1***

Figure 1.3.2-1
Documentation of Structural Steel Deterioration *1.3-3*
Figure 1.3.2-2
Documentation of Pier Deterioration *1.3-4*
Figure 1.3.3-1
Impact Damage on Steel Beams *1.3-7*
Figure 1.3.3-2
Framing Plan Recording Impact Damage on Steel Beams *1.3-8*
Figure 1.3.3-3
Concrete Deck Fillets *1.3-9*
Figure 1.3.3-4
Maximum Horizontal and Vertical Displacement of Impact Damaged Steel Beam or Girder *1.3-10*
Figure 1.3.4-1
Details of Impact Damaged PPC I-Beams *1.3-12*
Figure 1.3.4-2
Framing Plan of Impact Damaged PPC I-Beams *1.3-13*
Figure 1.3.5-1
Recommended Format for Mounting Inspection Photographs (3" x 5") *1.3-15*
Figure 1.3.5-2
Recommended Format for Mounting Inspection Photographs (4" x 6") *1.3-16*

1.4 Bridge Deck Overlays ***1.4-1***

Figure 1.4.4-1
Sequential Scarification and Overlaying of a R.C. Slab Bridge *1.4-4*
Figure 1.4.8-1
Concrete Overlay Profile on PPC Deck Beams *1.4-8*
Figure 1.4.8-2
PPC Deck Beam Expansion Joint Reconstruction with Concrete Overlay *1.4-9*
Figure 1.4.8-3
PPC Deck Beam Fixed Joint Reconstruction With Concrete Overlay *1.4-10*

1.5 Expansion Joint Replacements 1.5-1

Figure 1.5.2-1
Silicone Joint Sealer with Steel Plates..... 1.5-3
Figure 1.5.2-2
Silicone Joint Sealer with Polymer Concrete 1.5-4
Figure 1.5.3-1
Re-anchoring Existing Loose Expansion Angles 1.5-5
Figure 1.5.3-2
Expansion Joint Treatment with Grade Raise-
Existing Angles 1.5-6
Figure 1.5.3-3
Expansion Joint Treatment with Grade Raise-
Existing Plates 1.5-7
Figure 1.5.4-1
Joint Reconstruction for Steel Beams..... 1.5-9
Figure 1.5.4-2
Joint Reconstruction for PPC I-Beams 1.5-10
Figure 1.5.5-1
R.C. Deck Girder Concrete Removal..... 1.5-12
Figure 1.5.5-2
R.C. Deck Girder Joint Reconstruction (Full Removal)..... 1.5-13
Figure 1.5.5-3
R.C. Deck Girder Joint Reconstruction (Full Removal)..... 1.5-14
Figure 1.5.6-1
Joint Reconstruction for R.C. Slab (Full Removal)..... 1.5-16
Figure 1.5.6-2
Joint Reconstruction for R.C. Slab (Partial Removal) 1.5-17
Figure 1.5.7-1
PPC Deck Beam Joint Reconstruction
(Blockout Removal) 1.5-19
Figure 1.5.7-2
PPC Deck Beam Joint Reconstruction 1.5-20
Figure 1.5.7-3
PPC Deck Beam Joint Reconstruction
with Concrete Overlay 1.5-21
Figure 1.5.7-4
PPC Deck Beam Joint Reconstruction (Neoprene) 1.5-22
Figure 1.5.8-1
Plan of Joint Reconstruction 1.5-24
Figure 1.5.9-1
Finger Joint Field Dimensions (at Abutment)..... 1.5-26
Figure 1.5.9-2
Finger Joint Field Dimensions (at Pier)..... 1.5-27
Figure 1.5.9-3
Expansion Joint Treatment with Grade Raise-
Existing Finger Plate..... 1.5-28
Figure 1.5.10-1
Expansion Joint Treatment with Grade Raise-
Existing Neoprene 1.5-29

1.6 Longitudinal Joint Closure 1.6-1

Figure 1.6.2-1
Longitudinal Joint Removal Limits.....1.6-3
Figure 1.6.3-1
Longitudinal Joint Reconstruction Without Overlay.....1.6-4
Figure 1.6.3-2
Longitudinal Joint Reconstruction with
Existing Bituminous Overlay 1.6-5
Figure 1.6.3-3
Longitudinal Joint Reconstruction
with New Overlay.....1.6-6
Figure 1.6.3-4
Longitudinal Joint Reconstruction with
R.C. Deck Girders.....1.6-7
Figure 1.6.3-5
Longitudinal Joint Reconstruction with
Slab Bridge 1.6-8

1.7 Bridge Rails and Parapets 1.7-1

Figure 1.7.2-1
Rail Retrofit on PPC Deck Beams.....1.7-3
Figure 1.7.2-2
WT Rail Retrofit on PPC Deck Beams 1.7-4
Figure 1.7.3-1
Truss Rail Replacement.....1.7-5
Figure 1.7.3-2
Truss Rail Replacement.....1.7-6
Figure 1.7.4-1
Concrete Parapet Extension (Cast in Place).....1.7-7
Figure 1.7.4-2
Concrete Parapet Extension (Precast).....1.7-8
Figure 1.7.5-1
Parapet and Wingwall Repair Details.....1.7-10

1.8 Deck Drains 1.8-1

Figure 1.8.2-1
Drain Extension Detail.....1.8-3
Figure 1.8.2-2
Drain Extension Detail.....1.8-4
Figure 1.8.2-3
Drain Extension Detail.....1.8-5
Figure 1.8.2-4
Drain Extension Detail.....1.8-6
Figure 1.8.3-1
Drain Elimination Detail.....1.8-8
Figure 1.8.3-2
Drain Elimination Detail.....1.8-9
Figure 1.8.3-3
Drain Elimination Detail.....1.8-10

1.9 Bearing Replacements ***1.9-1***

Figure 1.9.3-1
Existing Steel Rocker Bearing Removal *1.9-2*
Figure 1.9.4-1
Stacked Plate Steel Extension *1.9-4*
Figure 1.9.4-2
Fabricated Steel Extension *1.9-5*
Figure 1.9.4-3
Concrete Extension *1.9-6*
Figure 1.9.5-1
Bearing Replacement For R.C. Slabs
With Joint Replacement *1.9-8*
Figure 1.9.5-2
Bearing Replacement for Existing R.C. Slabs *1.9-9*
Figure 1.9.8-1
Anchor Bolt Extension *1.9-11*

1.11 Pin and Link Replacement ***1.11-1***

Figure 1.11.2-1
Pin Replacement Detail Notes *1.11-3*
Figure 1.11.2-2
Pin Replacement Details *1.11-4*
Figure 1.11.2-3
Set Bolt for Pins & Links *1.11-5*
Figure 1.11.2-4
Temporary Beam Support Details *1.11-6*

1.12 Fatigue ***1.12-1***

Figure 1.12.2-1
Crack Arrestor Hole Detail *1.12-2a*
Figure 1.12.3-1
End of Stringer Repair Detail *1.12-3*
Figure 1.12.3-2
Cover Plate Repair Detail *1.12-4*
Figure 1.12.3-3
Fatigue Repair to Increase Flexibility *1.12-6*
Figure 1.12.3-4
Bolted Strengthening Fatigue Repair *1.12-7*
Figure 1.12.3-5
Fatigue Repair to Increase Stiffness *1.12-8*
Figure 1.12.3-6
Girder End Retrofit *1.12-10*

1.13 Impact Repairs - Steel Beams 1.13-1

Figure 1.13.1-1
Damage Calculations Based on NCHRP 271 .....1.13-3
Figure 1.13.1-2
General Guidelines Base on NCHRP 271 .....1.13-4
Figure 1.13.2-1
Suggested Beam Straightening Methods.....1.13-6
Figure 1.13.2-2
Suggested Beam Straightening Methods.....1.13-7
Figure 1.13.2-3
Suggested Beam Straightening Methods.....1.13-8
Figure 1.13.2-4
Strengthening Details.....1.13-10
Figure 1.13.2-5
Grinding Detail 1.13-11
Figure 1.13.3-1
Deck Slab Removal for Beam Replacement.....1.13-13
Figure 1.13.3-2
Temporary Slab Support Details 1.13-15
Figure 1.13.3-3
Temporary Slab Support Details 1.13-16
Figure 1.13.3-4
Top Flange Bevel Grind Detail 1.13-17
Figure 1.13.3-5
Partial Beam Replacement for Composite Beams 1.13-19
Figure 1.13.3-6
Splice for a Composite Beam Partial Replacement 1.13-20
Figure 1.13.4-1
Fillet Repairs and Layout of Locations 1.13-22

1.14 Impact Repairs - Concrete Beams.....1.14-1

Figure 1.11.3-1
PPC I-Beam Repairs.....1.14-3

1.15 Steel Superstructure Repairs 1.15-1

Figure 1.15.2-1
End of Beam Repair Detail.....1.15-3
Figure 1.15.2-2
Girder End Retrofit 1.15-4
Figure 1.15.2-3
End of Beam Repair Detail.....1.15-5
Figure 1.15.2-4
End of Beam Repair Detail.....1.15-6
Figure 1.15.2-5
Built-Up Floor Beam Repair Detail 1.15-8

Figure 1.15.3-1
End of Stringer Repair Detail *1.15-10*
Figure 1.15.3-2
End of Stringer Repair Detail *1.15-11*
Figure 1.15.3-3
Stringer End Repair *1.15-12*
Figure 1.15.3-4
Floorbeam Repair *1.15-14*
Figure 1.15.3-5
Floorbeam Web Repair *1.15-15*
Figure 1.15.3-6
Floorbeam Repair *1.15-16*

1.16 Concrete Superstructure Repairs 1.16-1

Figure 1.16.4-1
Shear Key Clamping Device for PPC Deck Beams *1.16-4*
Figure 1.16.7-1
Modified Tie Coupler for Transverse Tie Assembly *1.16-7*
Figure 1.16.8-1
R.C. Girder Replacement *1.16-8*

1.17 Substructure Repairs 1.17-1

Figure 1.17.1-1
Pier Repair Details *1.17-2*
Figure 1.17.1-2
Guidelines for Selection of
Substructure Repair Methods *1.17-2a*
Figure 1.17.2-1
Steel Collar Detail *1.17-4*
Figure 1.17.6-1
Retaining Wall Stem Removal and Replacement *1.17-7*
Figure 1.17.6-2
Water Seal Replacement Detail *1.17-8*
Figure 1.17.7-1
Abutment Wall Top Restraining Angle Detail *1.17-10*
Figure 1.17.7-2
Abutment Wall Support Using Steel Framework *1.17-11*
Figure 1.17.7-3
Abutment Wall Support Using Embankment *1.17-13*
Figure 1.17.7-4
Abutment Wall Support Using Counterforts *1.17-14*

Section 1 Repairs

1.1 General

1.1.1 Purpose and Scope

This section has been developed to assist Department personnel and consulting engineers during the preparation of bridge repair plans. Serviceability and performance history were considered in the development of the procedures and details presented in this section. The inclusion of specific details in this section for the repair of every type of structural deterioration or damage that may be encountered is not possible. In preparing this section, information has been included for the types of repairs most often required to adequately maintain typical bridge structures during their service life. The details and procedures provided in this section are intended to address routine repair requirements and to provide a foundation to assist in the preparation of unusual repair details.

All structure repair plans for maintenance contracts and Day Labor awards will be subject to the requirements of this section. The Design and Planning Sections of the Bridge Manual should be used as the primary reference when developing plans for bridge rehabilitations and the details and procedures provided in the Repair Section may be used during the final preparation of repair details associated with the rehabilitation project.

1.1.2 General Notes

In addition to the general notes provided in the Design Section of the Bridge Manual, the following general notes should be included in repair plans, when applicable.

Note	Application
1. All new fasteners shall be high strength bolts. Holes shall be subpunched or subdrilled 11/16" dia. and reamed in the field to 13/16" dia. for 3/4" dia. bolts, unless otherwise noted. Holes shall be subpunched or subdrilled 13/16" dia. and reamed in the field to 15/16" dia. for 7/8" dia. bolts, unless otherwise noted.	When new structural steel elements are to be connected to an existing steel member.
2. The Contractor shall provide support and/or shoring systems for the slab and beam in the area of existing beam removal and at other locations as required in order to maintain the existing deck profile. The support and/or shoring systems shall be approved by the Engineer. Such approval will not relieve the Contractor of responsibility for the safety of the structure.	When replacing portions of noncomposite beams without removing the existing deck slab.
3. After the new beam is in its final position and/or beam straightening operations have been completed, the Engineer in the field shall check to see that the top flange is tight against the slab. If not, the Contractor shall inject an approved epoxy between the existing concrete deck and the top flange of the beam. Cost to be incidental to "Furnishing and Erecting Structural Steel". See special provision for "Epoxy Injection".	When replacing or straightening a portion of a noncomposite beam without removing the existing deck slab. (Cost is incidental to "Beam Straightening" if "Furnishing and Erecting Structural Steel" is not used as a pay item.)

Note	Application
4. Grind existing nicks, gouges and shallow cracks in the damaged beams as shown by the details included in the plans. Ground surfaces shall be inspected for cracks using magnetic particle testing prior to initiating any beam straightening operations. The cost of grinding and testing is incidental to "Beam Straightening". Any cracks that cannot be removed by grinding approximately 1/4" deep shall be identified and reported to the Bureau of Bridges and Structures for further disposition.	All beam straightening projects where nicks, gouges or shallow cracks may be present on the damaged beams.
5. Existing structural steel shall only be cleaned and painted as required by the Special Provision "Cleaning and Painting Adjacent Areas of Existing Steel Structures”.	When new structural steel is being provided and attached to existing structural steel as part of a repair project.
6. The Inorganic zinc rich primer / Acrylic / Acrylic Paint System shall be used for shop and field painting of new structural steel except where otherwise noted. The color of the Acrylic finish coat shall be _____, Munsell No. _____. See Special Provision for "Cleaning and Painting New Metal Structures".	When new structural steel is being provided as part of a repair project.
7. Any reinforcement bars that are damaged during concrete removal operations shall be repaired or replaced using an approved bar splicer or anchorage system. Cost incidental to "Concrete Removal".	When existing concrete is to be removed and replaced. (This note may be placed adjacent to the detail showing concrete removal.)

1.2 ***PLAN PREPARATION AND REVIEW***

1.2.1 Responsibilities

The responsibility for the preparation of plans, special provisions and estimates for Maintenance Contracts and Day Labor awards rests with the Districts. The plans and special provisions may be prepared by District personnel or by a consulting engineer. Consulting engineers used for the preparation of repair plans and special provisions should be retained by listing the proposed project in the Professional Services Bulletin.

When repair plans are prepared by District personnel, the Structural Services Section of the Bureau of Bridges and Structures will prepare the details and special provisions necessary for the repair of deteriorated structural elements which will be included in a project. The District should submit a request for the preparation of structural repair details to the Structural Services Section with the following information:

- Structure Number
- Route Number
- Project Section Number
- County Name
- Marked Route
- Feature Crossed
- Inspection Information
- Brief Description of Proposed Structural Repairs
- Tentative Letting or Award Date
- Contract Number or Day Labor Project Number

Upon completion of the structural repair details, the Structural Services Section will provide the District with a copy of the structural repair detail sheets which will be included with the plans prepared by the District.

When a consulting engineer prepares the repair plans, the consulting engineer is responsible for the preparation of all repair details, including the structural repair details, necessary to complete the project.

1.2.2 Preparation Procedures

Bridge Condition Reports, existing fabrication plans and existing design plans should be consulted prior to commencing repair plan preparation. Plans should be prepared on 24" x 36" sheets. However, 8 1/2" x 11" sheets may be used for the preparation of repair plans for projects which are limited in scope and require relatively few repair details. Repair details and lettering on plan sheets which will be reduced in size for letting or award should be large enough for legibility after reduction. The plan presentation guidelines provided in the Design Section of the Bridge Manual should also be applied to repair plans.

1.2.3 Review Procedures

All Maintenance Contract and Day Labor plans prepared for the repair or retrofit of existing structures must be submitted to the Bureau of Bridges and Structures for review. The plans should be submitted for review prior to their submittal to the Bureau of Design and Environment for letting or to the Bureau of Operations' Day Labor Section for award. The plans should be submitted to the Bureau of Bridges and Structures sufficiently prior to the anticipated letting or award date to allow adequate time for review and revision of the plans. Review time will vary depending on the size and complexity of the project and on the current workload within the Bureau. Typically, project plans should be submitted for review a minimum of 90 days prior to the scheduled date for submittal of the plans, specifications and estimates (PSE) to the Bureau of Design and Environment for letting. In order for the Bureau of Bridges and Structures to be able to prioritize the review of projects submitted for review, it is important that each submittal for review be accompanied by information stating an anticipated letting or award date.

No bridge related repair plans for Maintenance Contracts or Day Labor awards are exempt from review by the Bureau of Bridges and Structures. All plans, including those for minor operations such as bridge rail and parapet repairs, slopewall repairs, rip rap placement, standard bridge rail installation and in-kind removal and replacement of bituminous surfaces must be submitted for review prior to submittal to the Bureau of Design and Environment or the Bureau of Operations.

Plans prepared by District personnel or consulting engineers for bridge maintenance or repair projects will be reviewed by the Structural Services Section of the Bureau of Bridges and Structures and should be submitted to:

To: Bureau Chief of Bridges and Structures (Ralph E. Anderson)
Attn: Section Chief of Structural Services (John A. Morris)

Plans prepared by consulting engineers for bridge replacement or rehabilitation projects will be reviewed by the Design Section of the Bureau of Bridges and Structures and should be submitted to:

To: Bureau Chief of Bridges and Structures (Ralph E. Anderson)
Attn: Section Chief of Design (Thomas J. Domagalski)

In most situations, maintenance and repair projects may be categorized as those projects for which a Type, Size and Location Plan (TSL) was not prepared. Project plans developed without the initial preparation of a TSL should be submitted to the Structural Services Section. After the submittal of the plans, if the scope of the project is determined to be rehabilitation rather than maintenance or repair, the Structural Services Section will forward the plans to the Design Section for review.

1.3 Inspections

1.3.1 Responsibilities

The District is responsible for the inspections required to produce repair plans prepared by Department personnel. The inspections should include the collection of information describing and locating the deterioration or damage. The Bureau of Bridges and Structures will provide assistance to the Districts during inspections, when requested to do so by the District. Assistance by Bureau of Bridges and Structures personnel will be limited to providing guidance to District personnel during the inspection on the collection of data required to adequately determine the extent and nature of the repairs needed. Also, the Bureau of Bridges and Structures may provide the District with inspection equipment and operating personnel when inspection scheduling does not conflict with other Bureau responsibilities.

1.3.2 General Deterioration

The information collected during the inspection of deteriorated structures should include a framing plan and detailed sketches of the affected members. The framing plan should indicate the locations of the deteriorated areas on the structure. The sketches should be dimensioned to show the extent and the location of the deterioration relative to a fixed point of reference, such as the end of the member. An estimate of the maximum amount of section loss should be given and the size and location of any corrosion holes, cracks and areas of section loss in the member should be shown on the sketch. Figure 1.3.2-1 shows a sample framing plan and sketch documenting the location and extent of structural deterioration. Photographs of all deteriorated locations requiring repairs should also be provided.

During an inspection, particular attention should be given to the structural elements in the area of existing deck drains and expansion joints. Also, personnel inspecting tension members should be alert for the presence of tack welds and plug welds.

When inspecting abutments and piers to determine areas of unsound concrete, an effort should be made to determine the depth of concrete deterioration. The depth of unsound concrete can be determined using a chipping hammer, masonry drill or concrete cores. When the depth of deterioration exceeds 12 inches, or significantly reduces the effective size of the member, a structural evaluation is needed to determine repair requirements. The length and size of all cracks in substucture units should be determined. Although hairline cracks are not repaired, they should be recorded in the inspection sketches and designated as "hairline". An example inspection sketch showing areas of deterioration is shown in Figure 1.3.2-2.

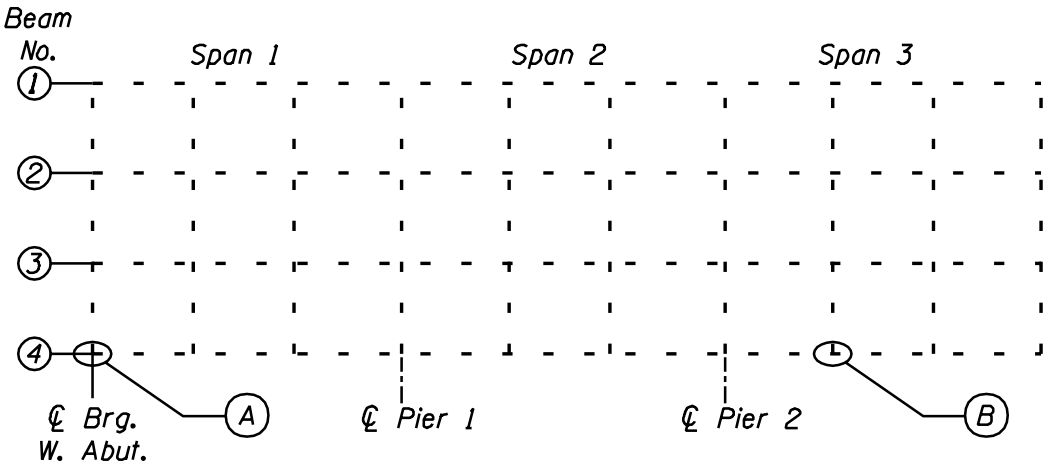

FRAMING PLAN

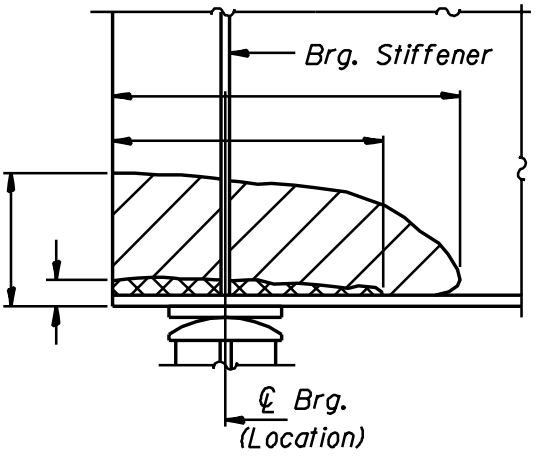

LOCATION A

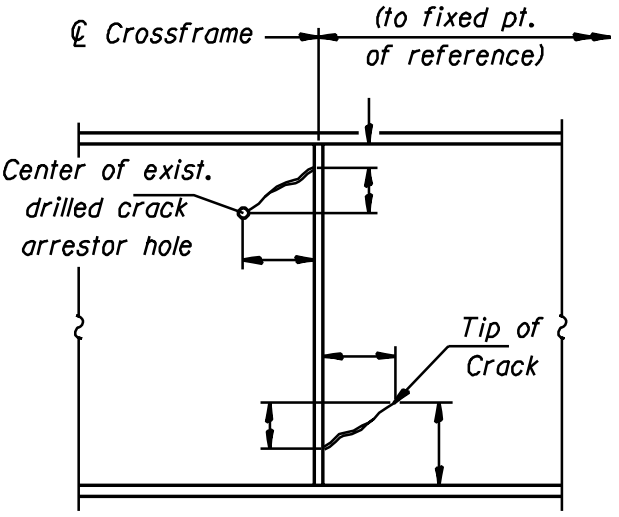

LOCATION B

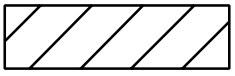

Area of Section Loss

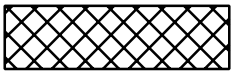

Area of complete (100%) Section Loss

DOCUMENTATION OF STRUCTURAL STEEL DETERIORATION

Figure 1.3.2-1

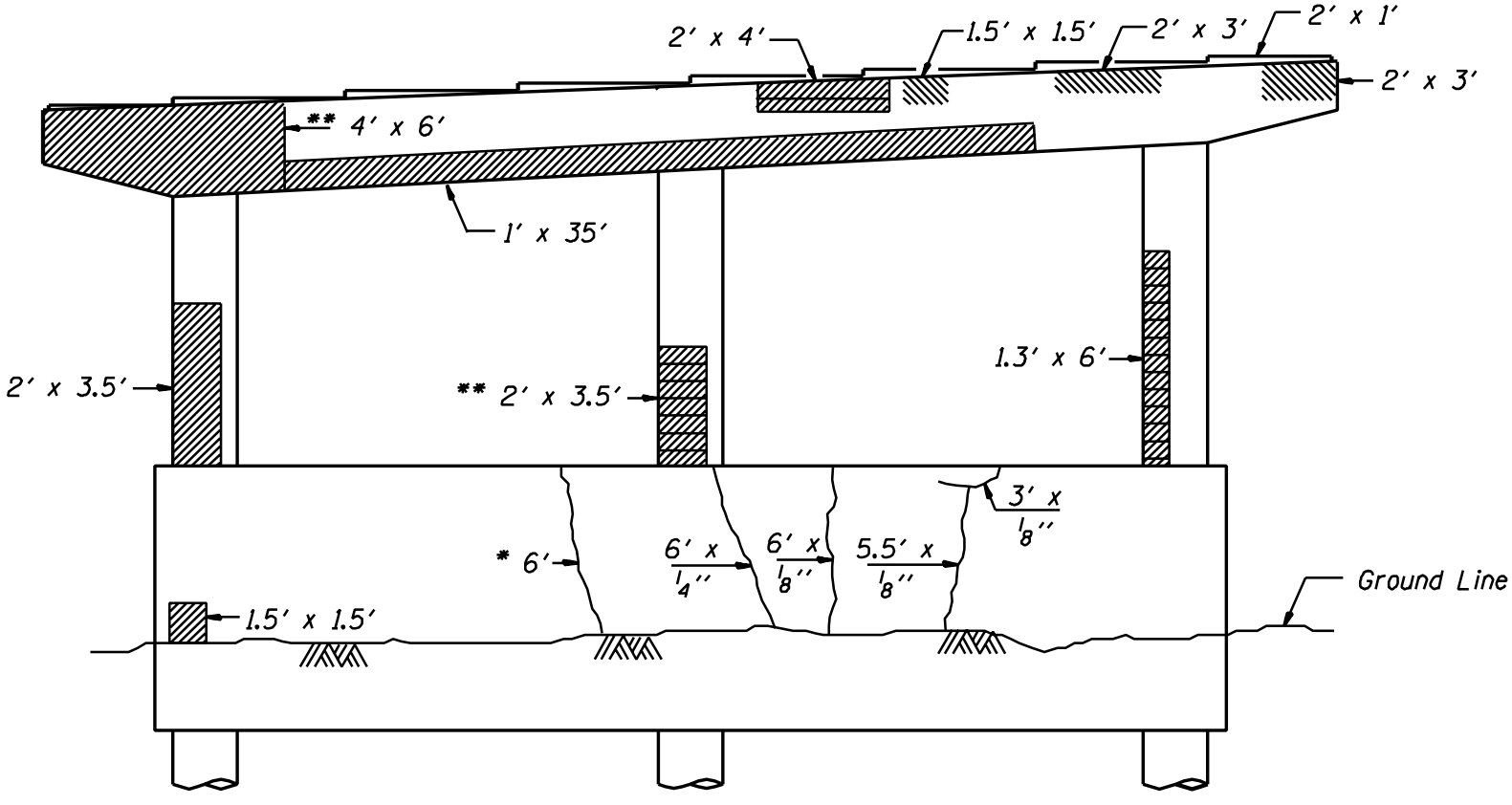

ELEVATION

(WEST FACE)

* Hairline Crack

** > 5''

LEGEND

- Hollow or Unsound Conc. (16.3 S.F.)
- Spalled Conc. (68.3 S.F.)
- Spalled Conc. with exposed rebars (22.8 S.F.)
- Crack (20.5 L.F.)

Total Formed Concrete Repair = 107.4 S.F.

PIER NO. W15

(LOOKING NORTHEAST)

LAKE SHORE DRIVE S.B.
TO I-55 W.B. OVER I.C.R.R.
STRUCTURE NO 016-1052

DOCUMENTATION OF PIER DETERIORATION

Figure 1.3.2-2

1.3.3 Impact Damage - Steel Structures

The inspection of steel beams or girders which have been struck by a vehicle is the first procedure necessary in determining whether to repair or replace a damaged beam. Depending on the extent of the damage, the beams may be replaced, straightened or straightened and retrofitted. In many cases the need for beam replacement is obvious, however, a beam may be damaged to a degree where visual observation alone is not sufficient to determine repair or replacement requirements. In order to more accurately determine if a beam can be straightened or must be replaced, measurements of impact deflection must be obtained. The measurements of the damage should be done in accordance with the guidelines presented in the National Cooperative Highway Research Program (NCHRP) Report 271 (Guidelines for Evaluation and Repair of Damaged Steel Bridge Members), with the following exceptions. NCHRP Report 271 indicates that deflection measurements should be obtained for the entire length of the beam where impact deflections have occurred. However, it has been found that it is not necessary to obtain deflection information for the entire deflected length of the beam when determining repair requirements. In order to reduce traffic lane closure time and the length of time inspection crews are exposed to traffic, measurements of vertical and horizontal beam flange deflection should typically be obtained at horizontal intervals of 3-inches for a distance of 2-feet on each side of the point of maximum displacement. This point is usually located at the point of impact where the highest local strains have occurred in the beam. Also, vertical and horizontal flange deflections should be obtained at horizontal intervals of 3-inches for a distance of 4-feet from the center of any deflected beam splice toward the adjacent substructure unit. Horizontal web deflections should also be measured at 2-inch vertical intervals for the depth of the web at the most severely deflected web section and adjacent to a deflected beam splice. Additional measurements of the web deflection should then be taken in a similar manner at a location 3-inches each side of the most severely deflected web section. The deflection measurements of the flange and web described above need not necessarily be the total deflection which has occurred relative to the beam's original position at the points being measured. The deflections being measured at 2 or 3-inch intervals must be measured relative to a common reference plane which is approximately parallel to the original location of the undamaged beam. Figure 1.3.3-1 illustrates the recording of localized impact deflections for steel beams and girders.

In addition to the localized impact deflection information, an overall description of the extent of damage and existing beam condition should be provided. This should consist of photographs, sketches and framing plans of the beams and diaphragms showing:

1. the location of impact on the beams which were hit.
2. the extent of impact deflection along each damaged beam referenced to a fixed point on the structure or the point of impact.
3. the location of damaged diaphragms or crossframes and the connecting angles or plates.
4. the location and dimensions of cracked welds and flange or web gouges.
5. the location and extent of damage to the concrete slab or fillet encasing the top flange of the beam.
6. any factors or conditions (such as utilities, clearances or beam deterioration not related to the impact) which must be considered during the preparation of repair plans.

An example framing plan recording impact damage information is shown in Figure 1.3.3-2. Figure 1.3.3-3 illustrates the documentation of damage to the concrete fillet encasing the top flange of a noncomposite beam. Also, a cross section of each damaged beam should be provided showing:

1. the maximum horizontal and vertical impact deflection of the beam.
2. the maximum rotation of the flange.

Figure 1.3.3-4 illustrates the documentation of maximum beam distortion.

Structure No. _ _ _ _ _ _ _ _ _
Beam No. _ _ _ _ _ _ _ _ _ _ _
Date _ _ _ _ _ _ _ _ _ _ _ _ _

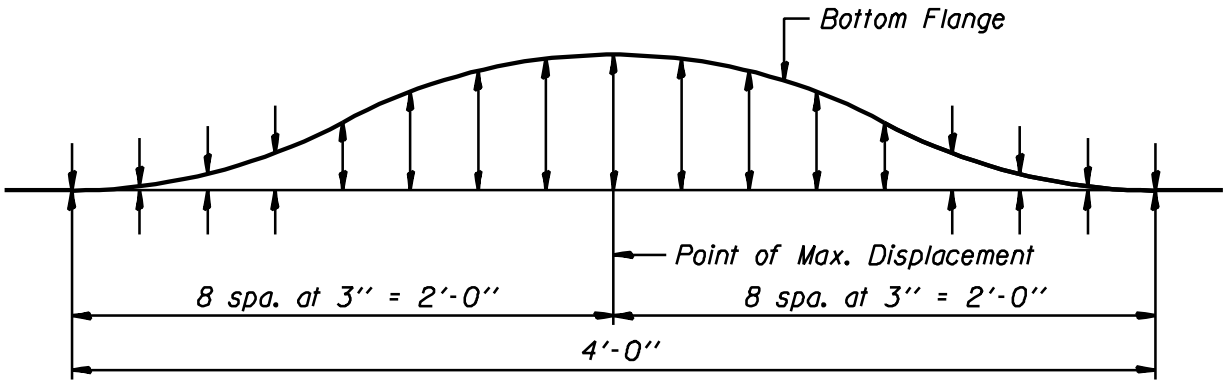

HORIZONTAL DISPLACEMENT

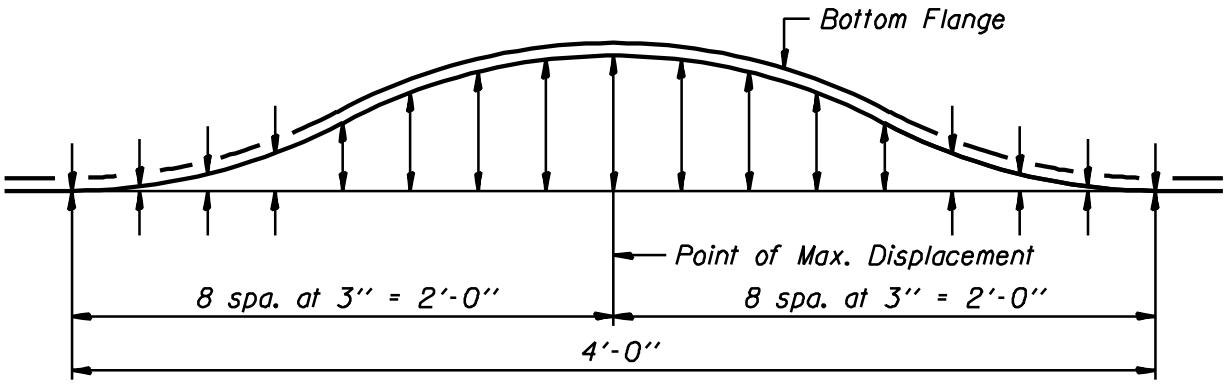

VERTICAL DISPLACEMENT

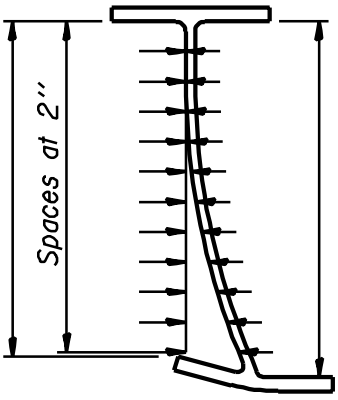

SECTION AT 3'' ( ) OF MAX. DISPLACEMENT

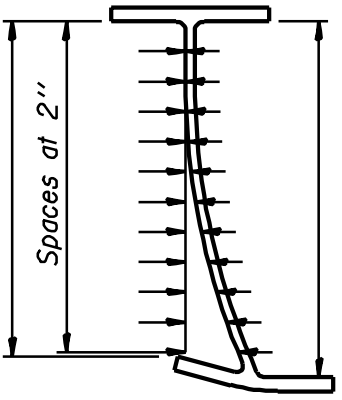

SECTION AT MAX. DISPLACEMENT

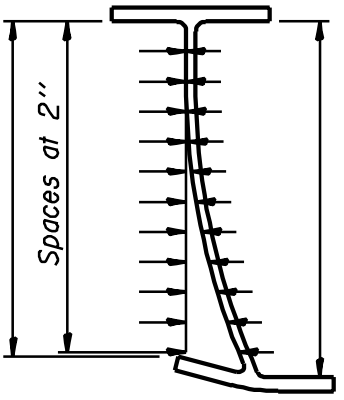

SECTION AT 3'' ( ) OF MAX. DISPLACEMENT

IMPACT DAMAGE
STEEL BEAMS

Figure 1.3.3-1

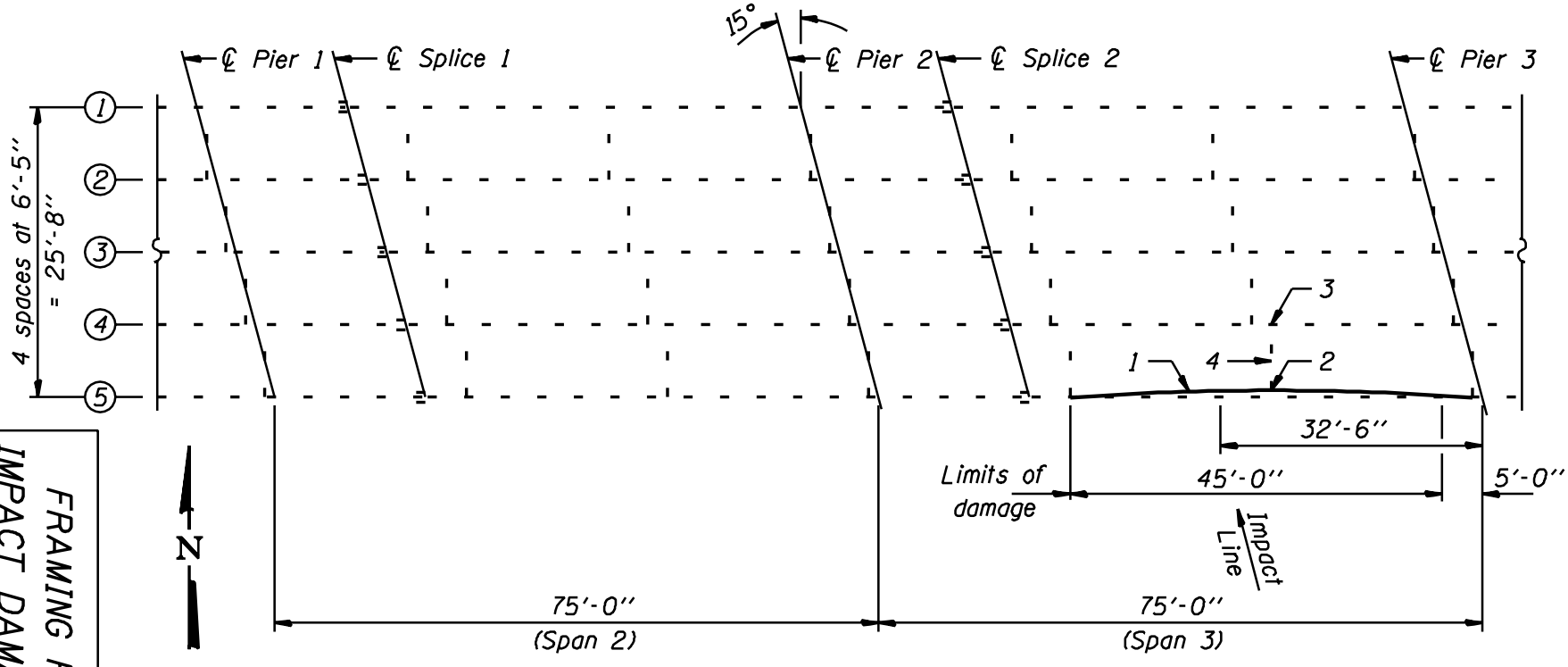

PARTIAL PLAN

1 Deformed Beam
2 Top and Bottom Diaphragm connection angles bent.
3 Bottom Diaphragm connection angle bent.
4 Diaphragm bent.

FRAMING PLAN RECORDING
IMPACT DAMAGED STEEL BEAMS

Figure 1.3.3-2

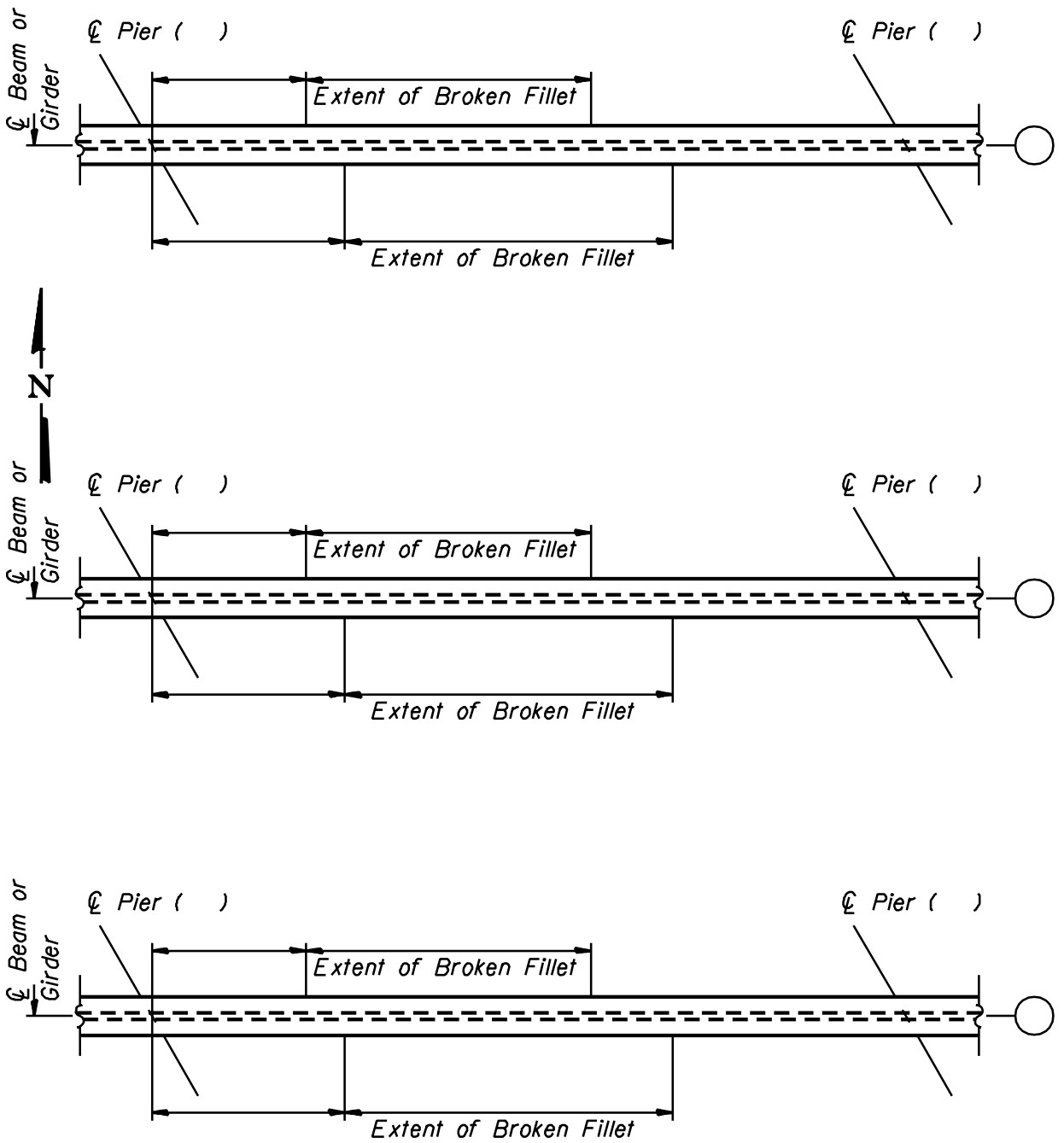

IMPACT DAMAGED STEEL BEAMS BROKEN FILLETS

Figure 1.3.3-3

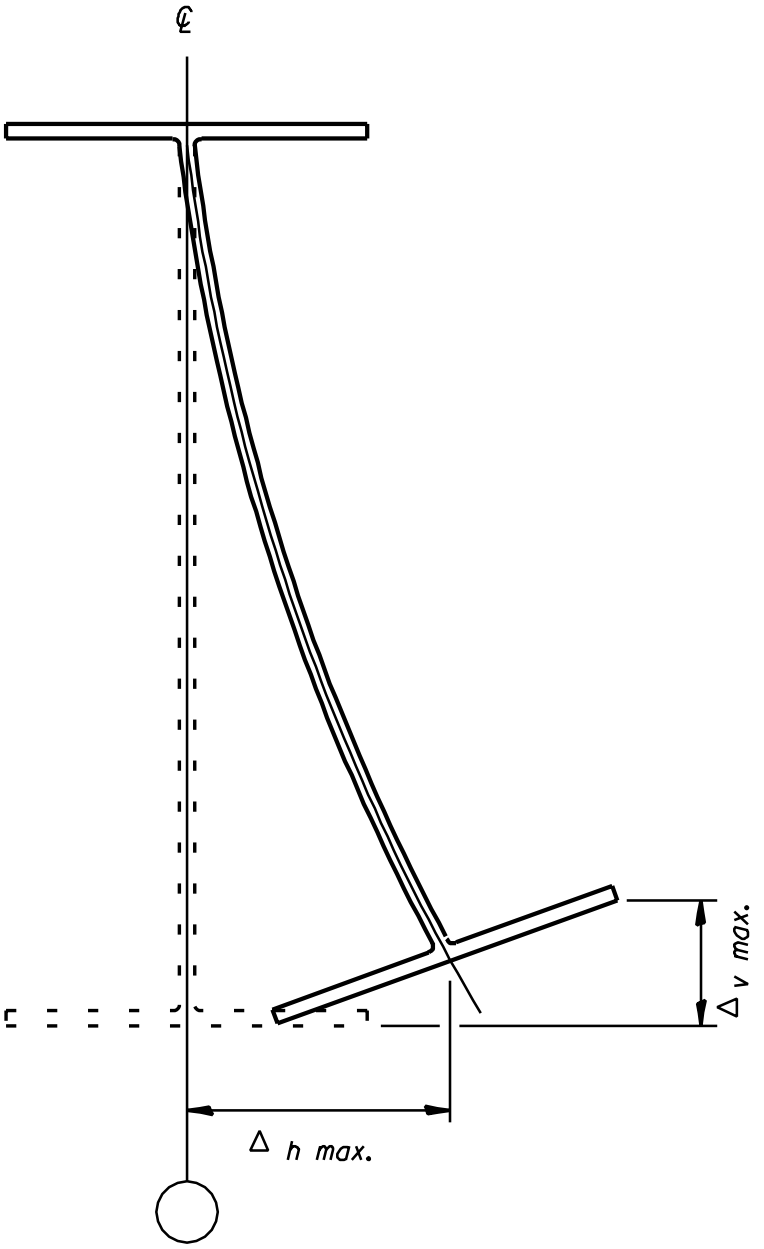

Span ( ), Looking ( )

MAXIMUM HORIZONTAL & VERTICAL DISPLACEMENT OF IMPACT DAMAGED STEEL BEAM OR GIRDER

Figure 1.3.3-4

1.3.4 Impact Damage - Concrete Structures

The inspection of impact damage to concrete structures should include information locating all cracks and areas of substantial section loss. This usually requires an elevation view of each side of the beam and a view of the bottom of the beam marked to show crack and section loss locations relative to a fixed point of reference as illustrated in Figure 1.3.4-1. The approximate width of cracks should be provided and the depth, width and length of areas of section loss should be defined. The location of exposed reinforcement bars or prestressing strands should be noted. Information giving the location, size and number of any severed reinforcement bars or prestressing strands should also be provided. Photographs of the damaged areas should be submitted with the inspection information. In addition to the above information, a framing plan showing information such as the point of impact and the location of damage to diaphragms should be included with the inspection data. An example framing plan recording impact damage on a concrete structure is illustrated in Figure 1.3.4-2.

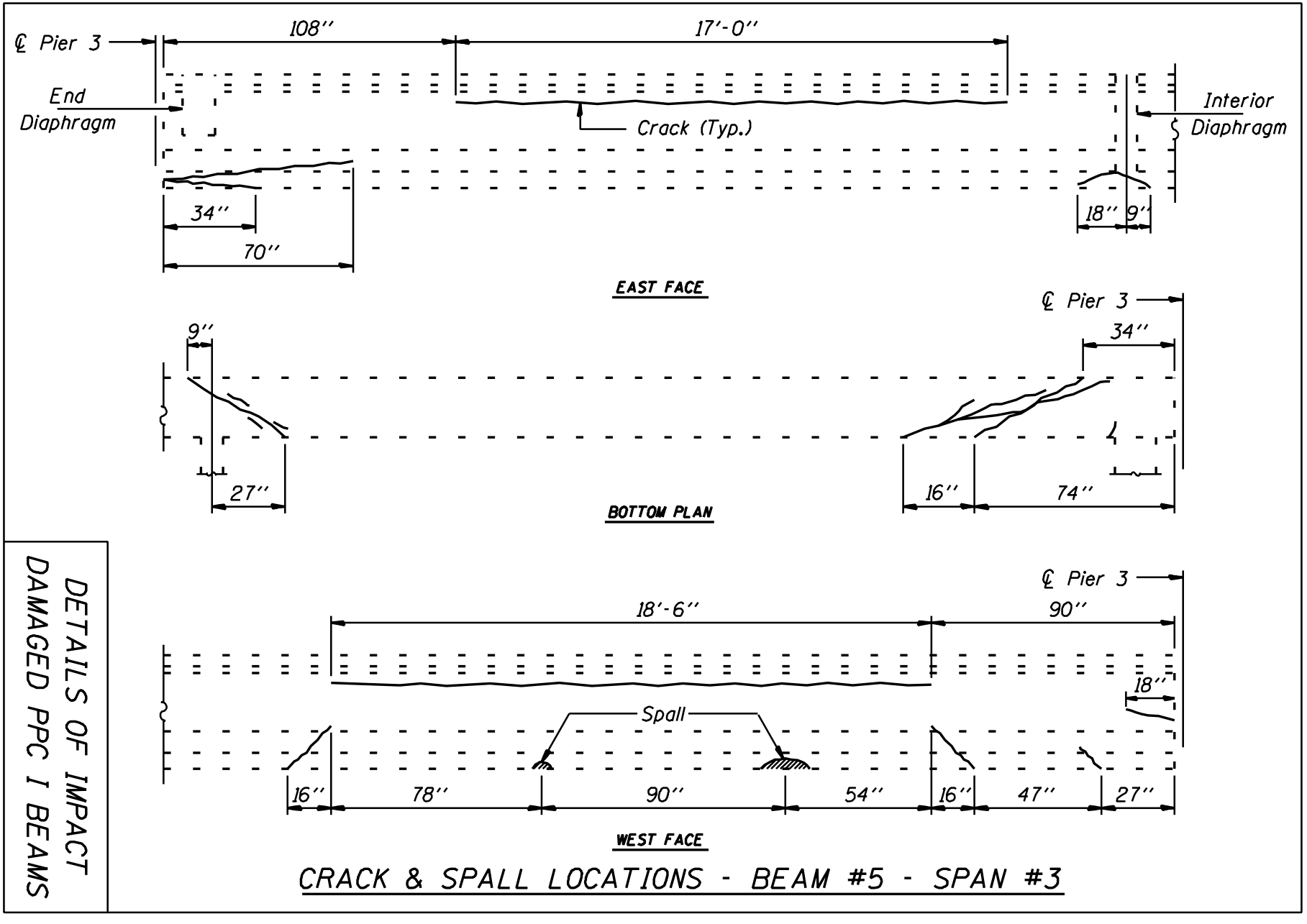

CRACK & SPALL LOCATIONS - BEAM #5 - SPAN #3

DETAILS OF IMPACT DAMAGED PPC I BEAMS

Figure 1.3.4-1

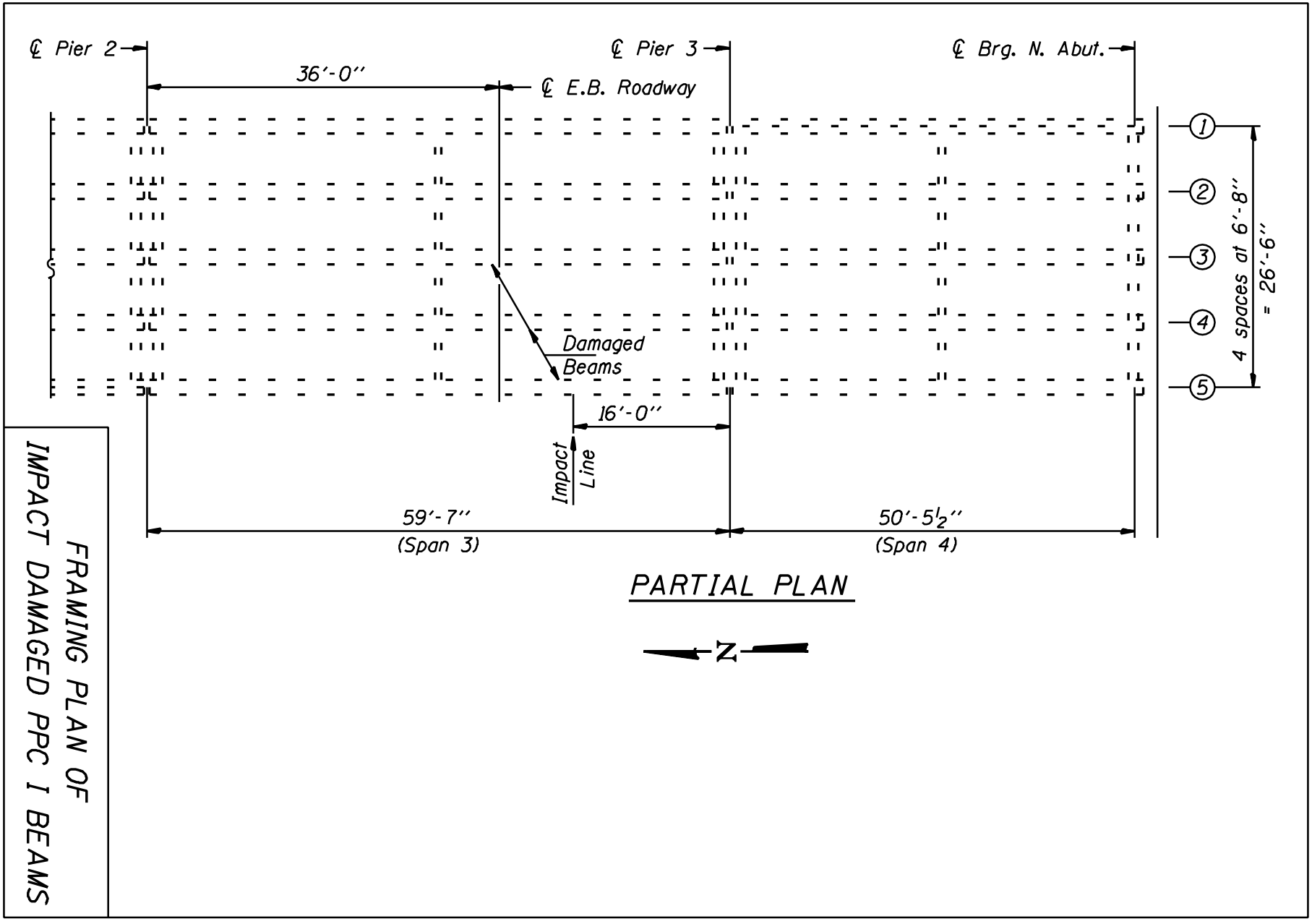

FRAMING PLAN OF IMPACT DAMAGED PPC I BEAMS

Figure 1.3.4-2

1.3.5 Inspection Photographs

Colored photographs should be taken of all deteriorated or damaged members to be repaired. The photographs submitted with inspection data should be of original quality and permanently attached to 8 1/2" x 11" pages with, depending on the size of the photographs, two or four photographs per page. The date the photographs were taken and the structure number of the bridge should be shown on each page of photographs. The location on the structure where the photograph was taken should be written on the page directly below each photograph (rather than on the back of the photograph) with an indication of the photograph's direction of view (such as "Looking North"). The recommended format for mounting inspection photographs submitted to the Bureau of Bridges and Structures with requests for the preparation of repair plans is illustrated in Figure 1.3.5-1 and Figure 1.3.5-2.

1.3.6 Nondestructive Testing

When evidence of cracking in a steel member is found during an inspection, nondestructive testing should be performed to confirm the presence of the crack and to determine the extent of the cracking. The most frequently used forms of nondestructive testing employed during an inspection to identify cracking are dye penetrant testing and magnetic particle testing.

Str. No.: _____
INSPECTION DATE: _____

3'' x 5'' PHOTO	3'' x 5'' PHOTO
DESCRIPTION:	DESCRIPTION:
3'' x 5'' PHOTO	3'' x 5'' PHOTO
DESCRIPTION:	DESCRIPTION:

Figure 1.3.5-1

Str. No.: _____
INSPECTION DATE: _____

4'' x 6''
PHOTO

DESCRIPTION:

4'' x 6''
PHOTO

DESCRIPTION:

Figure 1.3.5-2

*1.4 **Bridge Deck Overlays***

1.4.1 Overlay Types

Bridge deck overlays will typically consist of one of the following alternates:

1. Bituminous concrete with a waterproofing membrane system.
2. Microsilica or latex modified concrete.
3. Reinforced concrete

The type of overlay used for a project is chosen by district personnel based on cost, availability and experience with the overlay types. The "Guidelines for Bridge Deck Repair Projects", developed and distributed by the Planning Section of the Bureau of Bridges and Structures, should be used to assist in the planning and design of all bridge deck overlay projects. However, the expansion joint replacement details and longitudinal joint replacement details shown in this Repair Section should take precedence over similar details shown in the "Guidelines for Bridge Deck Repair Projects".

1.4.2 Bridge Condition Reports

The Bridge Condition Report for Deck Repairs (BCR-DR) requirements presented in the "Guidelines for Bridge Deck Repair Projects" apply to all Federal or State Funded projects. Bridge deck overlay projects using only Maintenance Funds do not require the preparation and submittal of a formal BCR-DR. However, District personnel should use the procedures presented in the guidelines for the survey and evaluation of an existing bridge deck when planning an overlay project using Maintenance Funds.

1.4.3 Deck Patching

Prior to the placement of an overlay, a deck survey is necessary to identify areas of the existing deck which require repair before the overlay can be placed. The date of the most recent delamination survey should be shown in the project plans on the sheet showing the deck patching locations or delamination survey plot. When more than one winter is expected to occur between the last delamination survey and the projected date of the commencement of deck patching operations, another delamination survey should be performed prior to the submittal of repair plans for review. It is preferred that the anticipated partial and full depth deck slab repair areas be shown on a plan view of the deck and included in the plans. When the deck slab repair areas cannot be predicted, then the deck survey data and how it relates to potential partial and full depth deck slab repairs should be shown in the plans. In all cases deck plan views should be shown of adequate size to allow the Engineer to record the location of the actual deck slab repairs on the as-built plans. The plans should include a note instructing the Engineer to record the deck repair areas in order to document as-built conditions for future reference.

Except for locating the anticipated patching areas in a plan view, specific details for partial and full depth patching are not required to be shown in the plans. Instructions for deck patching are included in the special provision for "Deck Slab Repair".

When the existing superstructure consists of a reinforced concrete slab, reinforced concrete deck girder or other type of superstructure where the deck functions as a component of the main load carrying members of the bridge spans, partial and full depth deck patching should be avoided. When partial or full depth patching is necessary on these types of structures, the size, locations and extent of the deck patching must be evaluated to determine if temporary shoring must be placed under portions of the superstructure until the deck patching concrete has obtained the required load carrying capacity.

1.4.4 Effect on Structure

The Bureau of Bridges and Structures should be contacted to evaluate the effect of overlay projects on the overall load carrying capacity of the structure. The load carrying capacity of a structure will be evaluated during the review of the BCR-DR. When a BCR-DR is not required for a project, the Structural Services Section should be contacted to evaluate the effect of the overlay on the structure. This contact for evaluation is also necessary for bridges included with roadway resurfacing projects where the District plans to scarify the existing wearing surface on a bridge deck and/or place a new wearing surface on the bridge.

When a bridge deck overlay project requires the removal of the existing deck concrete over a large area to the level of the existing top reinforcement bars of a reinforced concrete slab bridge, special precautions are necessary to maintain the structural load carrying capacity of the structure. The Bureau of Bridges and Structures should be contacted by District personnel for assistance in determining what measures should be taken to insure the structural integrity of reinforced concrete slab bridges when the method of deck removal specifies that the top reinforcement bars are to be exposed or deck patching is required. The measures typically taken will require that:

1. the superstructure be supported from below during the scarification and overlay operations.
2. the full and partial depth slab repairs be completed and cured prior to scarification operations.
3. the existing reinforced concrete slab be scarified and overlaid in segments following a predetermined sequence.

Details associated with the sequential concrete surface removal and overlaying of a reinforced concrete slab bridge are shown in Figure 1.4.4-1.

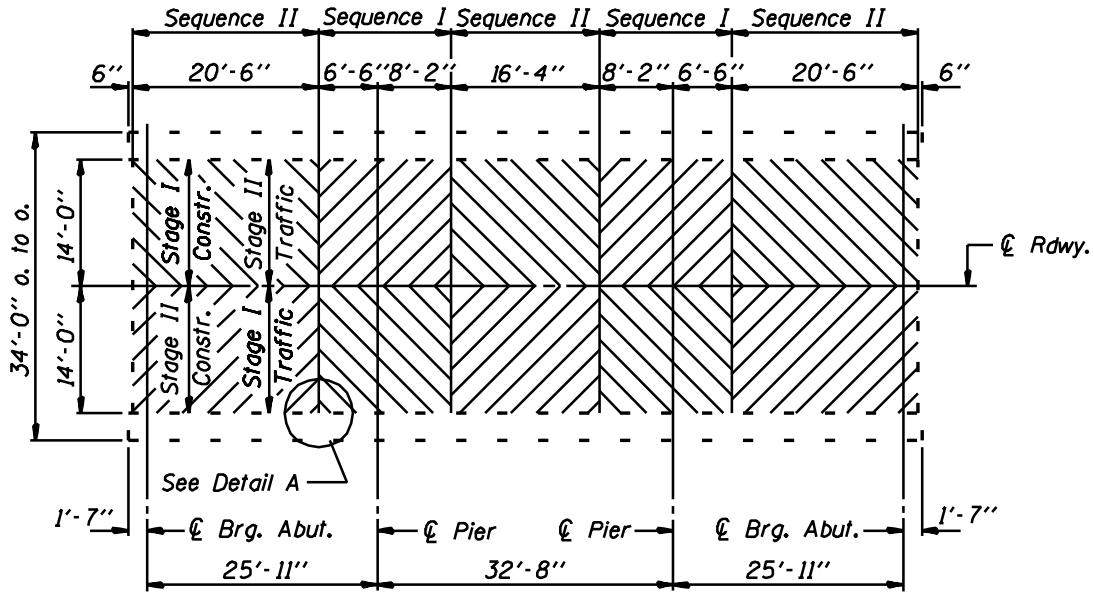

PLAN

STAGING SEQUENCE DETAIL

Existing 1½" Bit. W. S. shall be removed Bk. to Bk. Abutments full length before Stage Removals started.

Deck Removal Sequencing applies to both Stage I and Stage II Construction.

Sequence II Removal Areas shall not be started until the new concrete in Sequence I Removal Areas has reached a minimum of 650 psi modulus of rupture.

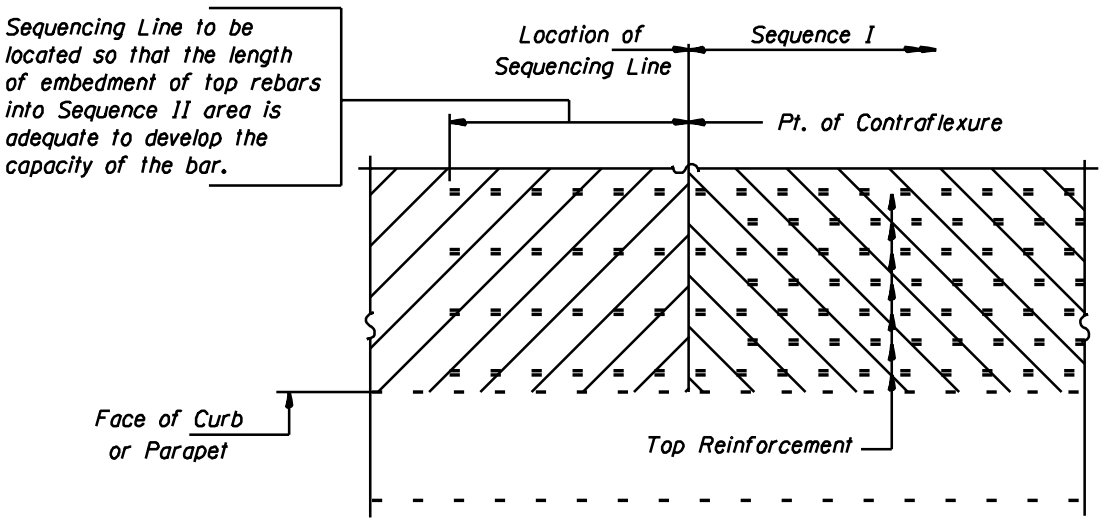

DETAIL A

SEQUENTIAL SCARIFICATION AND OVERLAYING OF A R. C. SLAB BRIDGE

Figure 1.4.4-1

1.4.5 Bituminous Concrete Overlays

A bituminous concrete overlay can be used to replace an existing bituminous concrete wearing surface or to protect an existing bare concrete deck. A waterproofing membrane system is always required when using a bituminous concrete overlay. The minimum thickness of the bituminous overlay to be placed, not including the 1/2 inch waterproofing, should be 1-1/4 inches for a minimum total thickness of 1-3/4 inches. When replacing an existing bituminous concrete overlay, the scarification of the existing overlay should not extend into the existing waterproofing membrane if the waterproofing is to remain in place. If the existing waterproofing system is to be removed and a new waterproofing membrane system applied to the deck, the scarification of the existing overlay should not extend into the surface of the concrete deck. Also, an existing bare concrete deck should not be scarified prior to the application of the waterproofing membrane system, but the deck should be cleaned using methods which will not roughen the surface. Waterproofing membrane should always be extended across construction joints in the deck at locations where the deck has been patched or replaced. When removing existing bituminous concrete surfaces and existing waterproofing systems, the existing plans and other records should be consulted to determine if any hazardous materials, such as asbestos, were used. If hazardous materials were used in the existing overlay, containment of the materials during removal and proper disposal will be necessary.

1.4.6 Microsilica, Plasticized Dense, or Latex Concrete Overlays

Microsilica, plasticized dense, and latex concrete should be placed with a minimum thickness of 2-1/4 inches on a roughened or scarified concrete surface. A maximum overlay thickness of 3 1/2 inches may be placed without the inclusion of reinforcement bars or wire mesh. Existing concrete decks, to which microsilica, plasticized dense, or latex concrete is to be applied, should be scarified a minimum of 1/4 inch to remove all waterproofing membrane and to provide a roughened surface. When microsilica, plasticized dense, or latex concrete is used to overlay a precast prestressed concrete deck beam superstructure, the minimum overlay thickness, reinforcement bar requirements and scarification limitations specified for Reinforced Concrete Overlays should be used.

1.4.7 Reinforced Concrete Overlays

Reinforced concrete overlays may be a minimum of 4 inches in thickness. However, a minimum concrete overlay thickness of 5 inches should be used when the additional deadload will not adversely effect the load carrying capacity of the structure. Also, a minimum overlay thickness of 5 inches will facilitate the embedment of railpost anchors in the overlay if necessary. Reinforcement bars or wire mesh providing a minimum cross sectional area equivalent to no. 4 bars at 12 inch centers, in both the longitudinal and transverse directions, should be incorporated in the overlay to prevent and control cracking.

Except when placed on a precast prestressed concrete deck beam or precast concrete bridge slab superstructures, the concrete surface on which the reinforced concrete overlay will be placed should be scarified a minimum of 1/4 inch. All existing wearing surface, waterproofing and foreign material must be removed from the surface receiving the overlay.

1.4.8 Overlaying Precast Superstructures

The top surface of precast prestressed concrete deck beams and precast bridge slabs superstructures should be prepared by scarifying only the wearing surface and removing any waterproofing or foreign material using hand methods and shotblasting. The top surface of the original precast units should not be scarified.

The thickness of an overlay on a precast prestressed concrete deck beam superstructure will vary parallel to the centerline of the bridge in order to match the profile grade of the roadway and to account for the camber in the beams. A profile of the overlay should be shown in the plans to clarify the relationship of the overlay thickness to the profile grade and beam camber as illustrated in Figure 1.4.8-1.

Figure 1.4.8-2 shows the use of a preformed joint seal at an expansion joint reconstruction with concrete overlay.

In order to control cracks in the area of the overlay located over a fixed pier, a relief joint should be installed in the overlay over the pier. Figure 1.4.8-3 illustrates the use of a formed joint with sealer to control overlay cracking over a fixed pier. This detail is used with overlay on existing PPC Deck Beams.

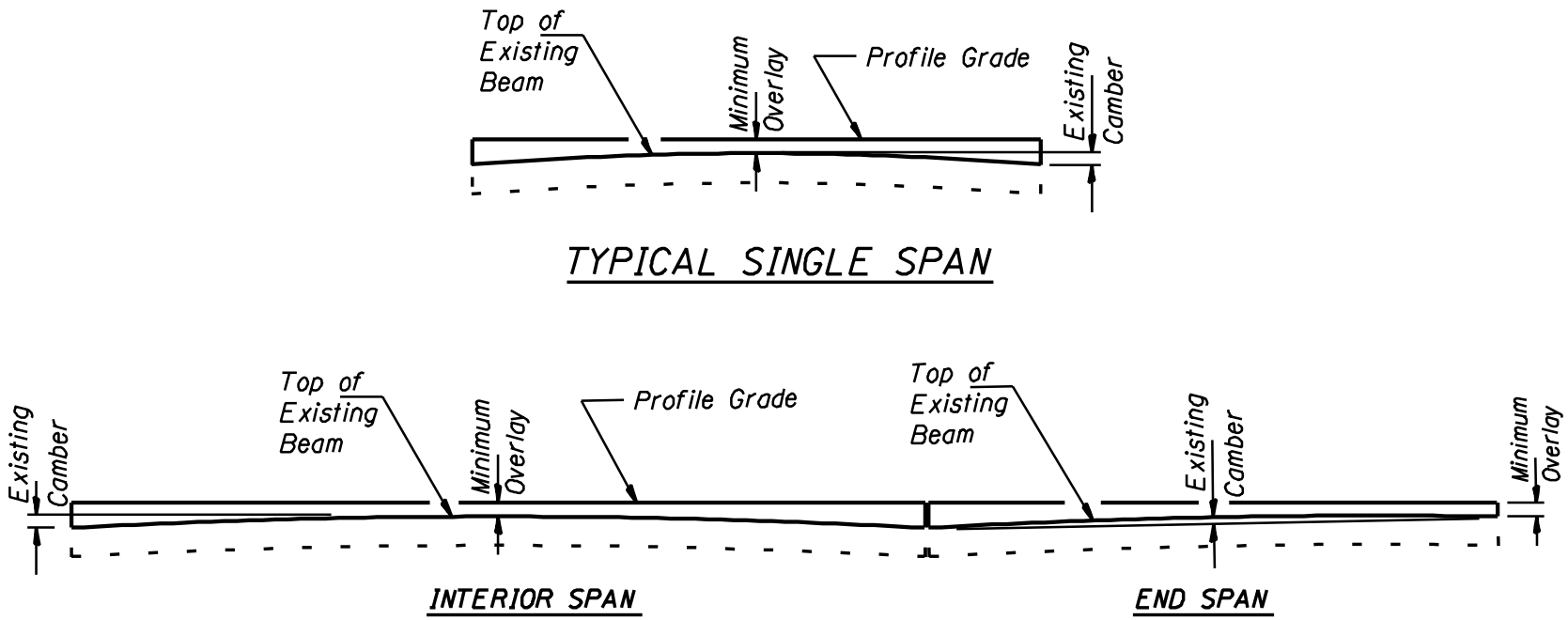

EXISTING PPC DECK BEAM ELEVATION

Notes: The thickness of the concrete overlay varies as required to adjust for the existing profile grade and beam camber.

CONCRETE OVERLAY PROFILE ON PPC DECK BEAMS

Figure 1.4.8-1

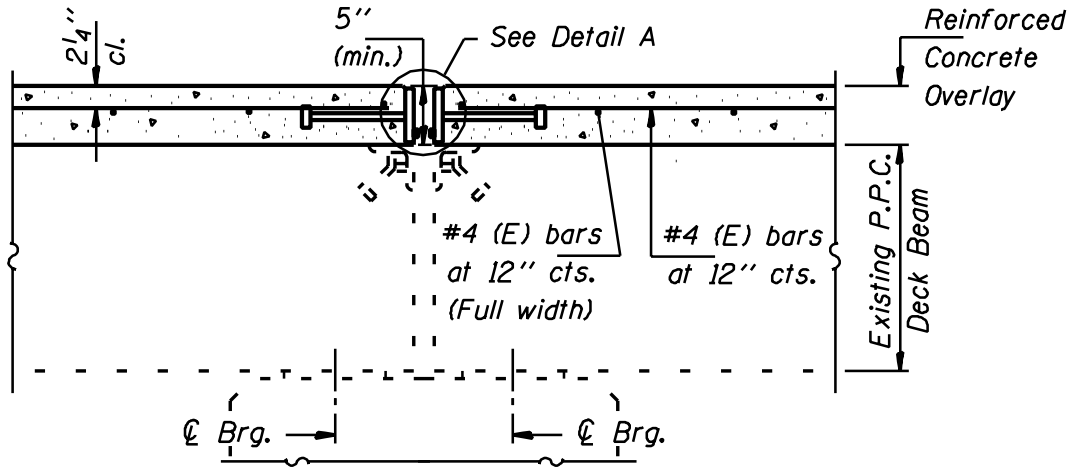

SECTION AT PIER

Minimum bar lap for #4 bars = 1'-4"

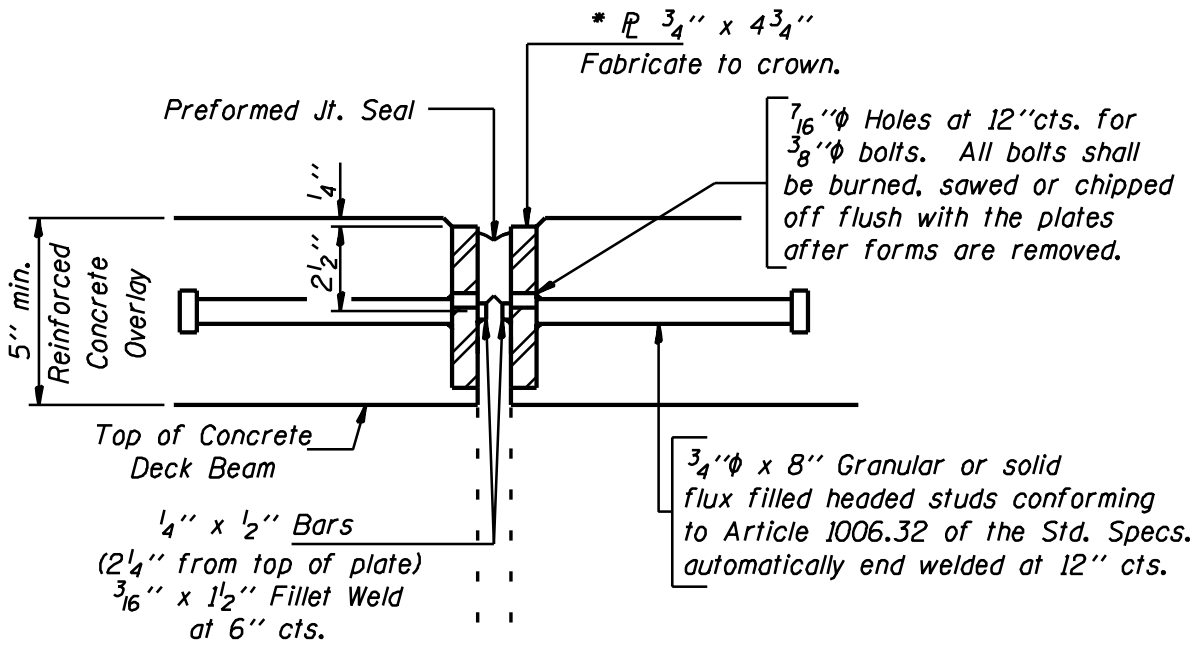

DETAIL A

Notes:

After fabrication all surfaces of the steel plates shall be given one shop coat of paint specified for Structural Steel. No field painting required.

* Furnish in segments of 20 ft. maximum length. Maximum space between installed segments shall be 3/16". Seal space with Silicone Sealant suitable for Structural Steel.

PPC DECK BEAM EXPANSION JOINT RECONSTRUCTION WITH CONCRETE OVERLAY

Figure 1.4.8-2

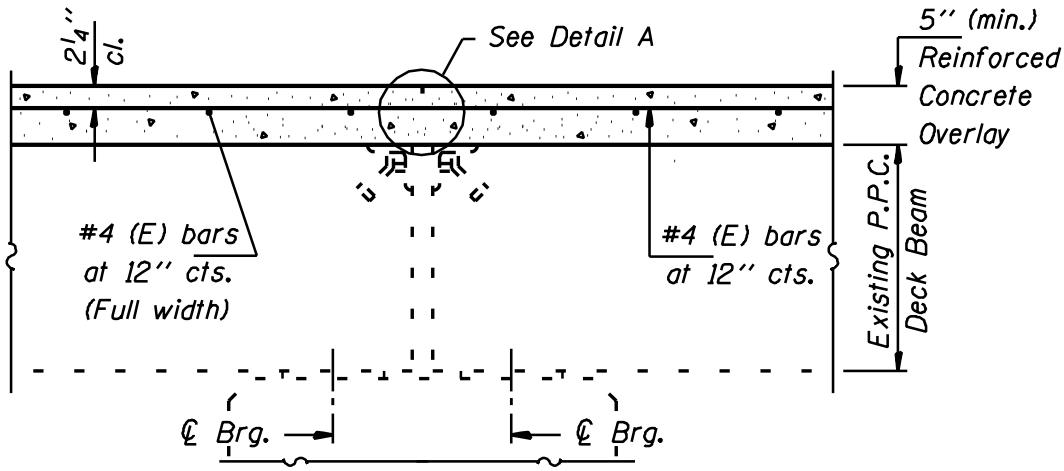

SECTION AT PIER

Minimum bar lap for #4 bars = 1'-4"

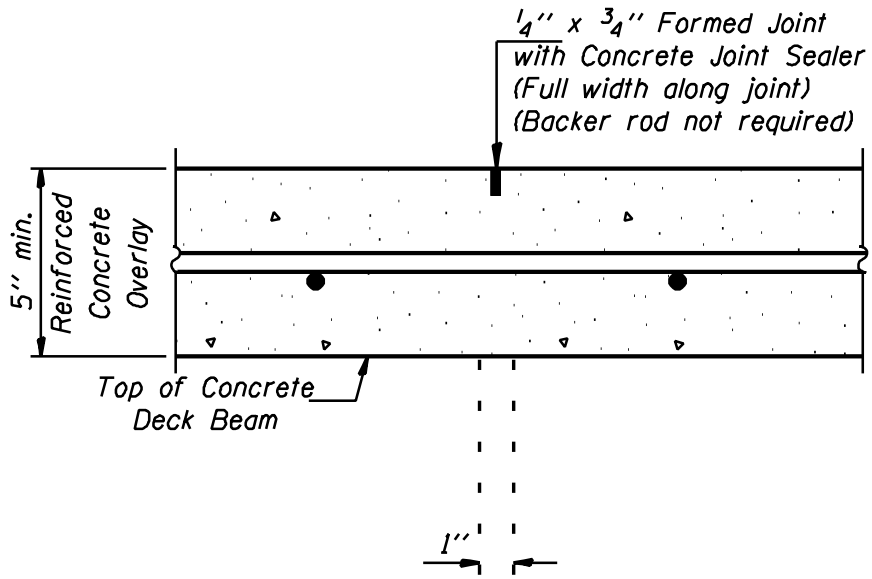

DETAIL A

PPC DECK BEAM FIXED JOINT RECONSTRUCTION WITH CONCRETE OVERLAY

Figure 1.4.8-3

1.5 Expansion Joint Replacements

1.5.1 General

The replacement of expansion joints is a common maintenance operation necessary to prolong the life of a structure. This operation is usually required due to: the structural failure of the joint; the joint no longer provides protection for the structural elements below against exposure to drainage from the deck; or the joint opening has closed and is restricting the normal expansion of the structure. Before preparing plans to replace closed expansion joints it is necessary to determine the cause of the closure to avoid a recurrence after the new expansion joint is installed. If the cause of the joint closure is not apparent or easily correctable, the Bridge Investigations and Repair Plans Unit of the Structural Services Section of the Bureau of Bridges and Structures should be contacted for assistance.

1.5.2 Joint Type Selection

When replacing an expansion joint, the selection chart provided in the Design Section of the Bridge Manual should be used to select the type and size of the replacement joint. Joint types not shown in the Design Section of the Bridge Manual joint selection chart or which have not been tested and approved for general use by the Department should not be used unless the Bureau of Bridges and Structures and the Bureau of Materials and Physical Research have concurred in the use of the joint on an experimental basis. A joint type which is not in the Bridge Manual, but is approved as an alternate to the Preformed Joint Sealer and Neoprene expansion joints up to 3“ width is the Silicone Joint Sealer. Figure 1.5.2-1 shows the sealer being used with the same plates and studs which are utilized with the Preformed Joint Sealer. An optional, preferred method for the sealer is illustrated in Figure 1.5.2-2 where a polymer concrete nosing protects the joint edges. Silicone Joint Sealers larger than 3“ width are considered experimental.

1.5.3 Existing Armoring Steel

The existing steel armoring elements anchored in the ends of the PPC deck beams or cast-in-place decks can often be reused and incorporated into the details for the replacement joint when the concrete in the area of repair is sound and will not be removed. When these existing steel elements are found to be loose, reanchorage of the steel elements can be achieved by drilling through the steel element and into the beam, installing epoxy grouted threaded rods and bolting the steel element firmly in position. Also, voids under the existing steel elements can be repaired by injecting epoxy under the steel element in the area of the voids. These procedures are illustrated in Figure 1.5.3-1 and require the placement of a concrete overlay in the area of the deck adjacent to the armoring elements. When the grade is raised at an expansion joint with existing armoring steel, the steel can be retrofitted as shown in Figures 1.5.3-2 and 1.5.3-3. In these details the grade is raised by the thickness of the new bituminous wearing surface or concrete overlay.

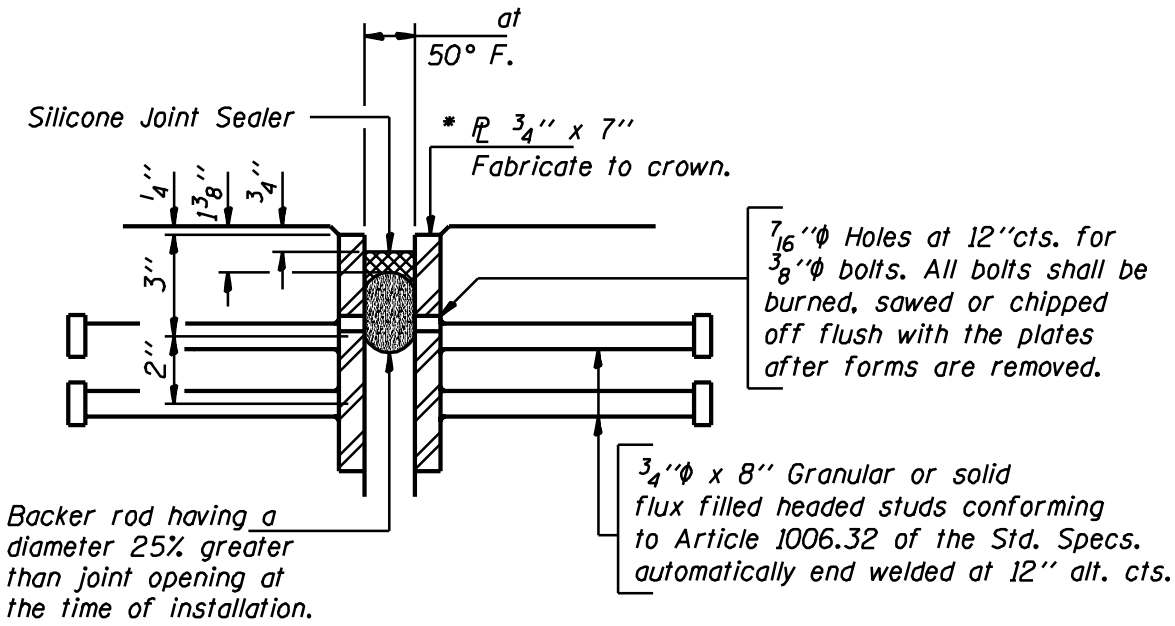

SILICONE JOINT SEALER DETAIL

DESIGN CHART

Length Contributing to Expansion	0'-40'	40'-80'	80'-120'	120'-160'	160'-200'
Joint Opening at 50° F	1"	1½"	2"	2½"	3"

* Furnish in segments of 20 ft. maximum length. Maximum space between installed segments shall be 3/16". Seal space with Silicone Sealant suitable for Structural Steel.

Note: After fabrication all surfaces of the steel plates shall be given one shop coat of paint specified for Structural Steel. No field painting required.

SILICONE JOINT SEALER WITH STEEL PLATES

Figure 1.5.2-1

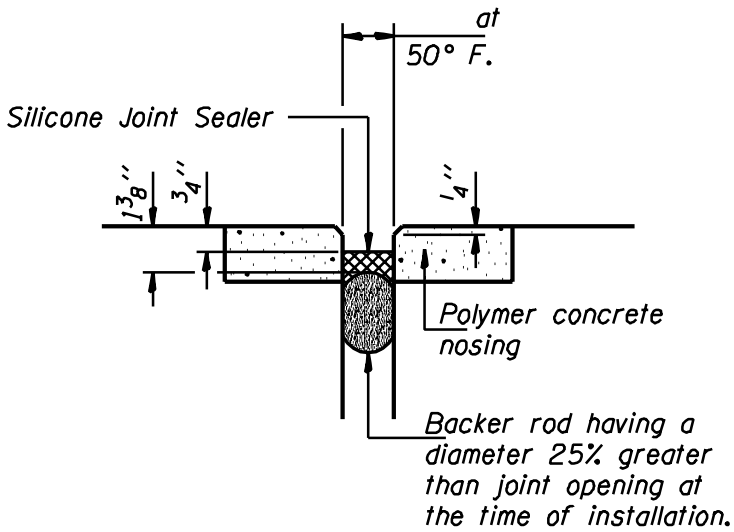

SILICONE JOINT SEALER DETAIL

DESIGN CHART

Length Contributing to Expansion	0'-40'	40'-80'	80'-120'	120'-160'	160'-200'
Joint Opening at 50° F	1"	1½"	2"	2½"	3"

SILICONE JOINT SEALER WITH POLYMER CONCRETE NOSING

Figure 1.5.2-2

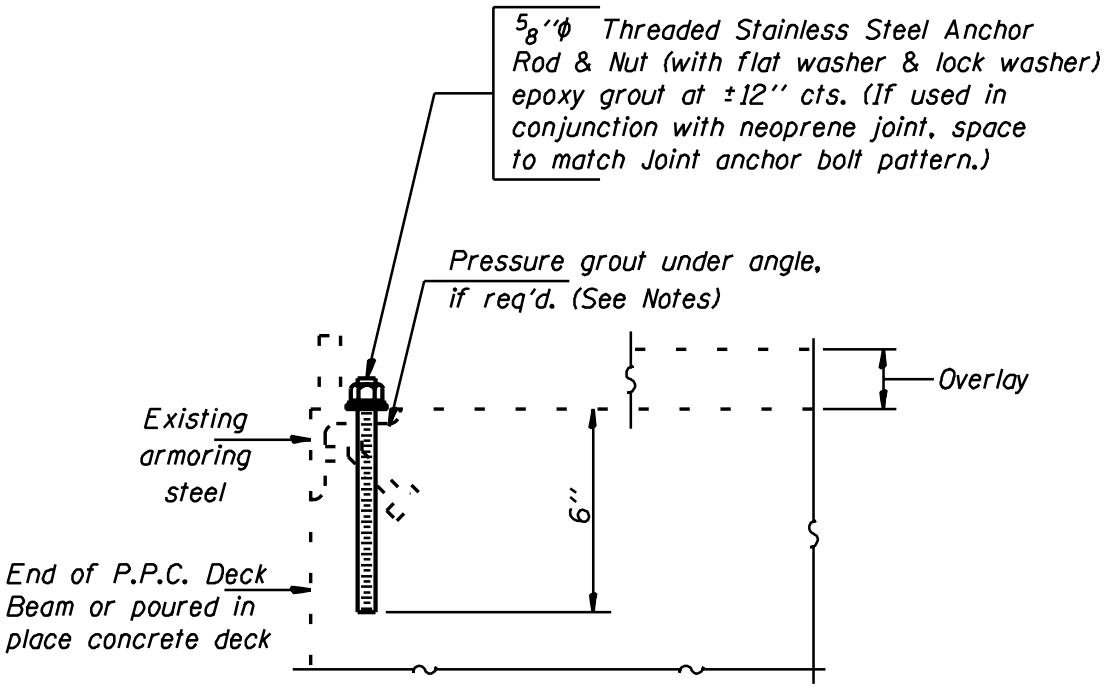

Notes: Loose angles will be bolted to the end of the deck or P.P.C. deck beams by field drilling holes through the existing angles and epoxy grouting threaded rods into the deck.

If the existing angles sound loose after the epoxy grouted rods are in place, holes will be drilled through the angles and epoxy injected under the angles.

RE-ANCHORING EXISTING LOOSE EXPANSION ANGLES

Figure 1.5.3-1

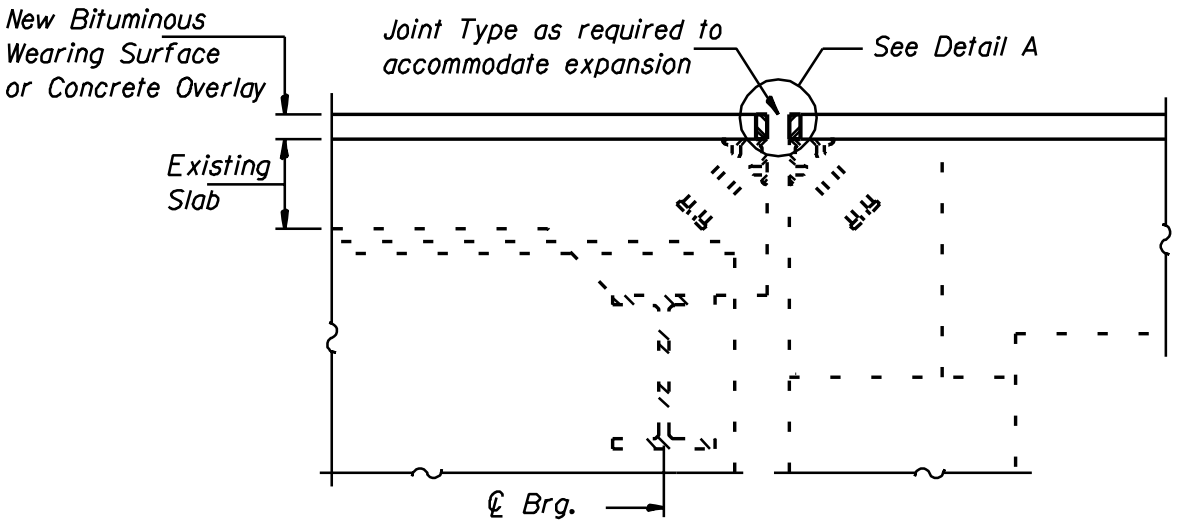

SECTION AT ABUTMENT

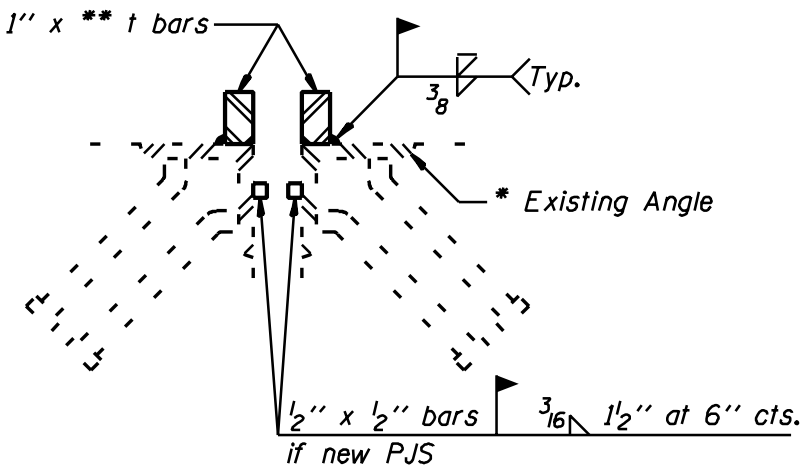

DETAIL A

* Re-anchoring of existing angles may be required. See Figure 1.5.3-1

** t = Thickness of Bituminous Surface or Concrete Overlay.

EXPANSION JOINT TREATMENT WITH GRADE RAISE AND EXISTING ANGLES

Figure 1.5.3-2

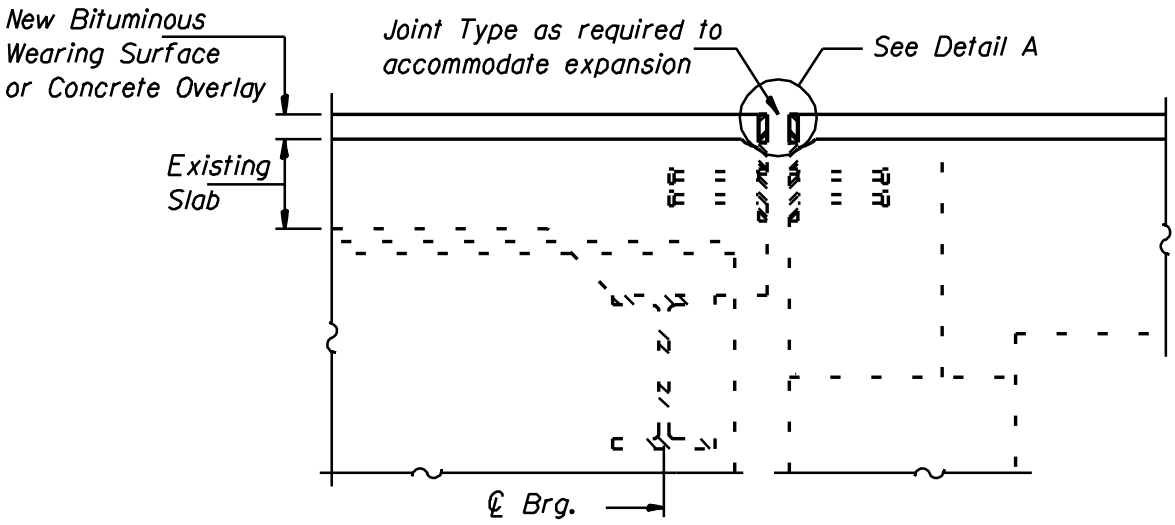

SECTION AT ABUTMENT

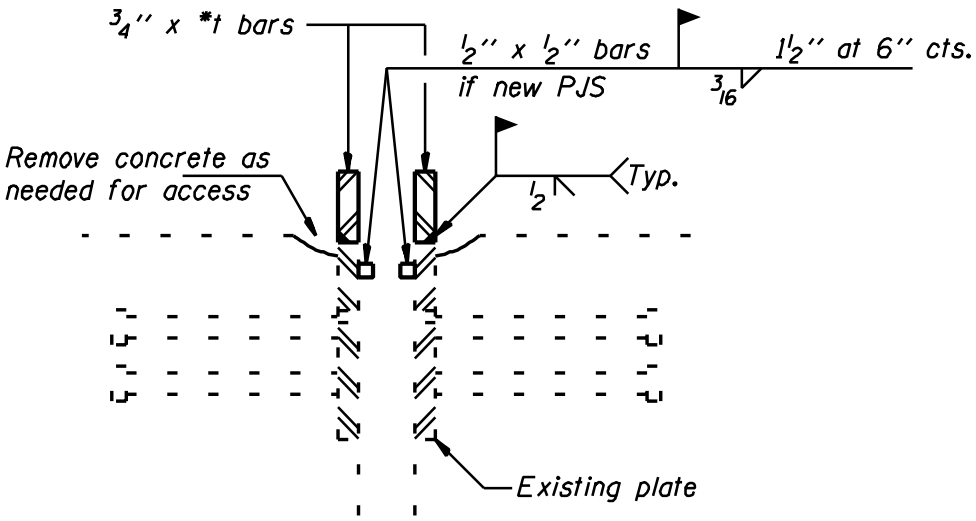

DETAIL A

* t = Thickness of Bituminous Surface or Concrete Overlay.

EXPANSION JOINT TREATMENT WITH GRADE RAISE AND EXISTING PLATES

Figure 1.5.3-3

1.5.4 Concrete Deck on Multi-beam System

The most common type of expansion joint replacement involves the removal and replacement of a portion of a reinforced concrete deck slab which rests on a multi-beam support system. A minimum 2'-0" of deck slab and parapet removal and replacement is required. The deck slab removal should be sufficient to include the entire thickened (corbel) area of the deck slab in the area of the joint. This will require more than the minimum 2'-0" of deck slab removal and replacement in many situations.

The longitudinal reinforcement bars in the area of slab, curb, sidewalk and parapet removal should remain in place and should be cleaned and incorporated into the new construction. The existing reinforcement bars placed parallel to the end of the deck should be removed and new reinforcement bars should be provided. Also, the existing vertical reinforcement bars in the curb and parapet areas should be removed and replaced.

The details, which should be incorporated in expansion joint replacements for deck slabs on multi-beam systems, are illustrated in Figure 1.5.4-1 for steel beams and Figure 1.5.4-2 for PPC I beams.

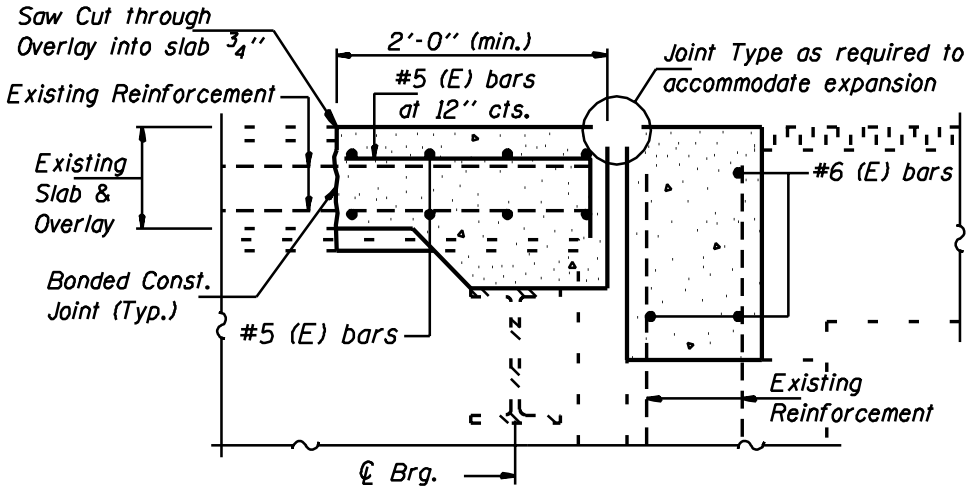

WITHOUT NEW OVERLAY

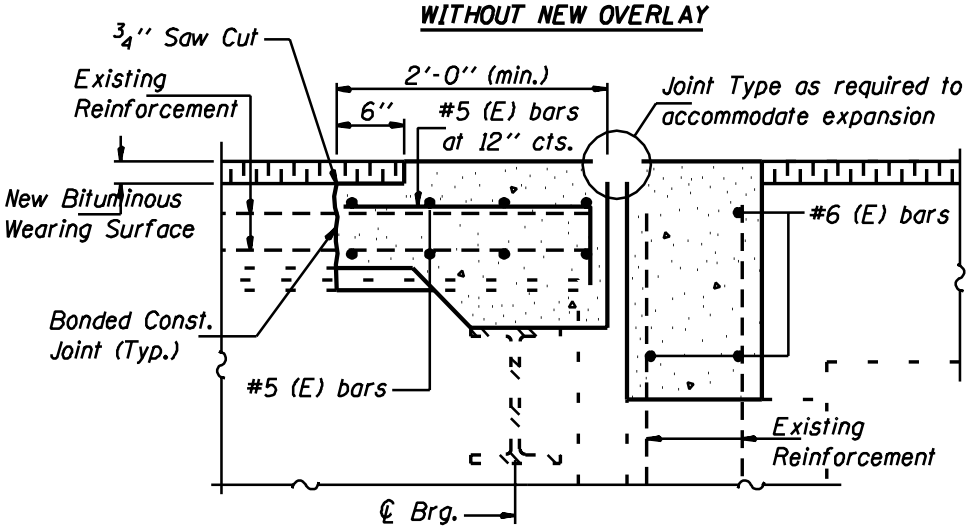

WITH BITUMINOUS WEARING SURFACE

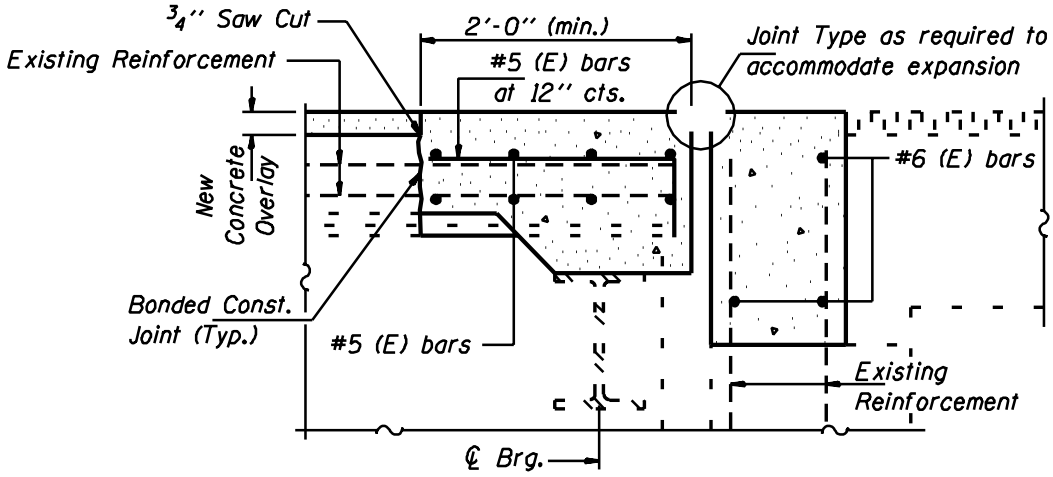

WITH CONCRETE OVERLAY

Note: Existing Reinforcement Bars shown are to be cleaned and incorporated into new construction.

JOINT RECONSTRUCTION FOR STEEL BEAMS

Figure 1.5.4-1

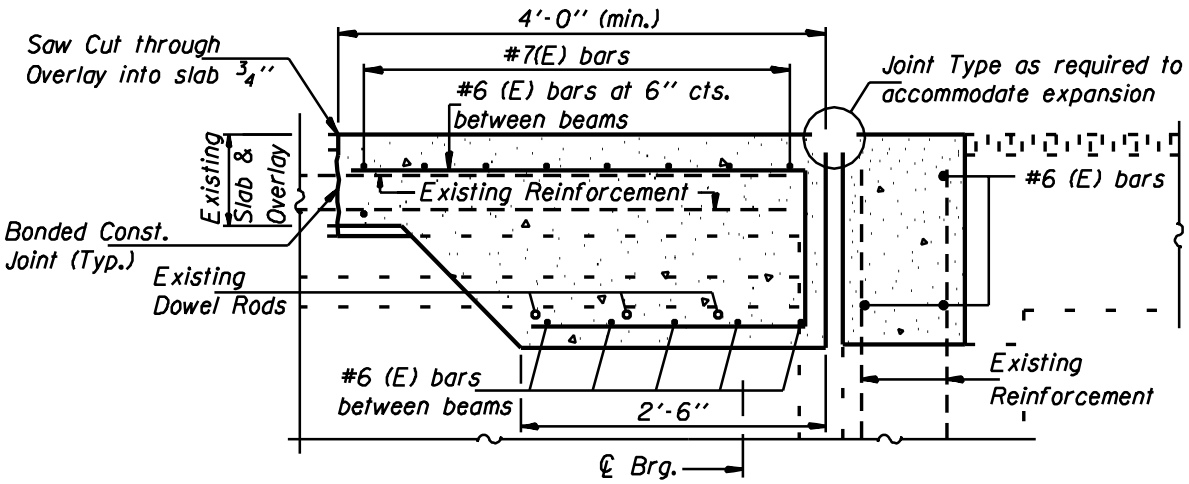

WITHOUT NEW OVERLAY

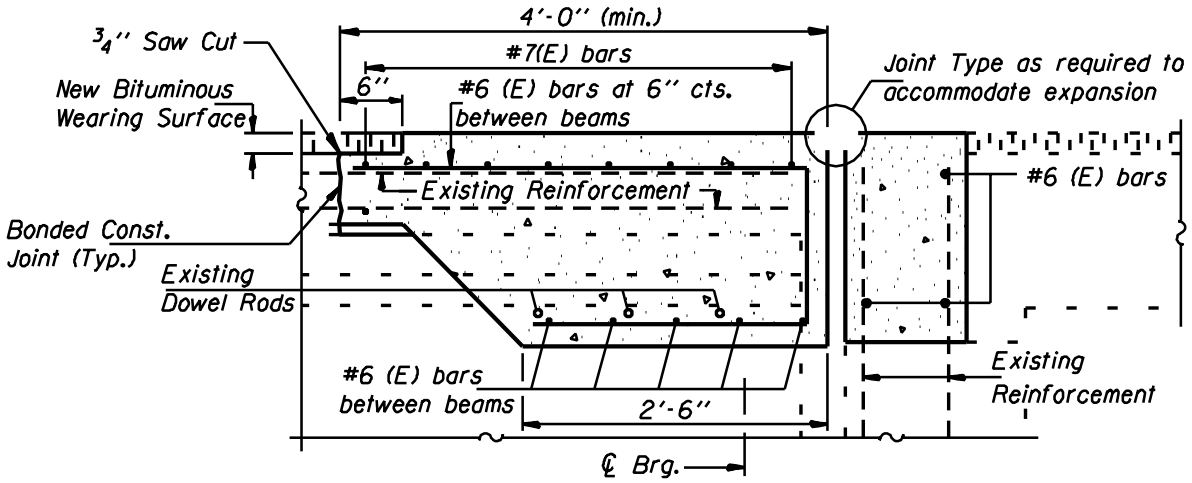

WITH BITUMINOUS WEARING SURFACE

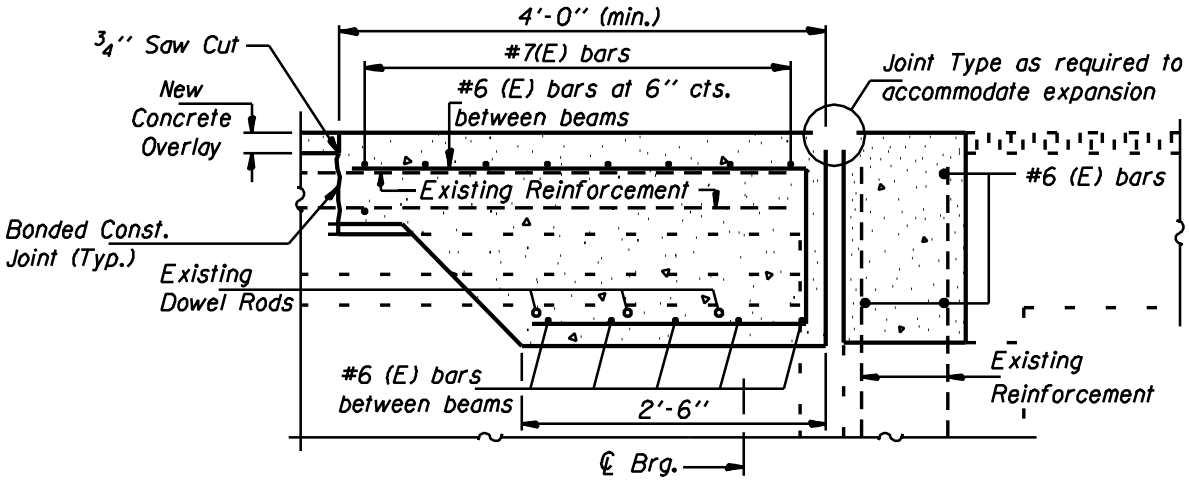

WITH CONCRETE OVERLAY

Note: Existing Reinforcement Bars and Dowell Rods shown are to be cleaned and incorporated into new construction.

JOINT RECONSTRUCTION FOR PPC I BEAMS

Figure 1.5.4-2

1.5.5 Reinforced Concrete Deck Girder

Another type of superstructure often encountered during an expansion joint replacement project is the cast-in-place reinforced concrete deck girder (T-beam). The same slab removal and replacement requirements specified for multi-beam bridges should be used except that the depth of the deck slab removal in the area directly over the girders should be limited to the minimum depth of the deck slab rather than the thickened (corbel) end area of the slab. This difference in concrete removal limits is illustrated in Figure 1.5.5-1.

The existing reinforcement bars should be incorporated into the new construction or replaced in a manner similar to that specified for deck slabs on multi-beam systems. Figure 1.5.5-2 and Figure 1.5.5-3 illustrate detail for expansion joint replacement associated with reinforced concrete deck girders.

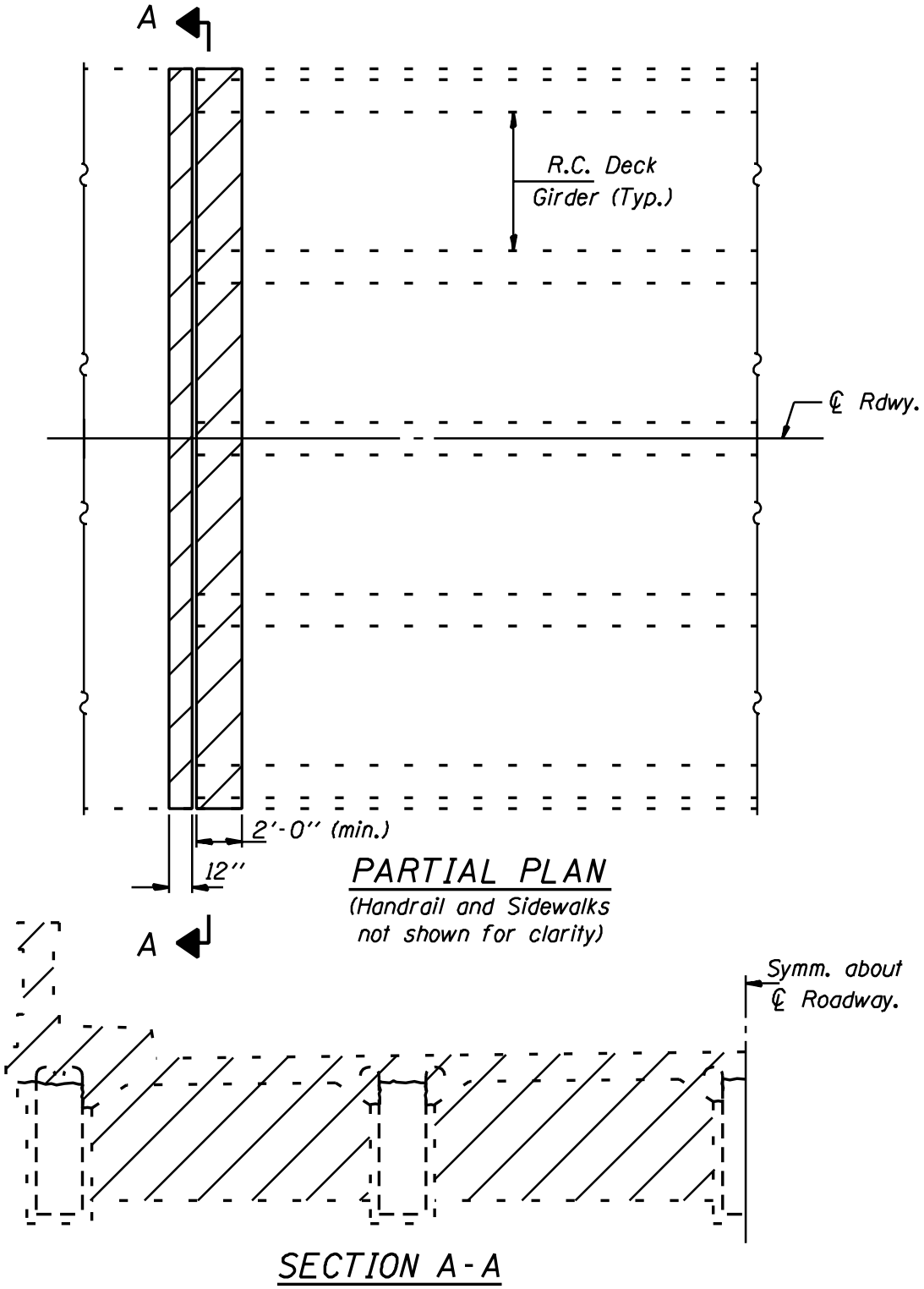

R.C. DECK GIRDER
CONCRETE REMOVAL

Figure 1.5.5-1

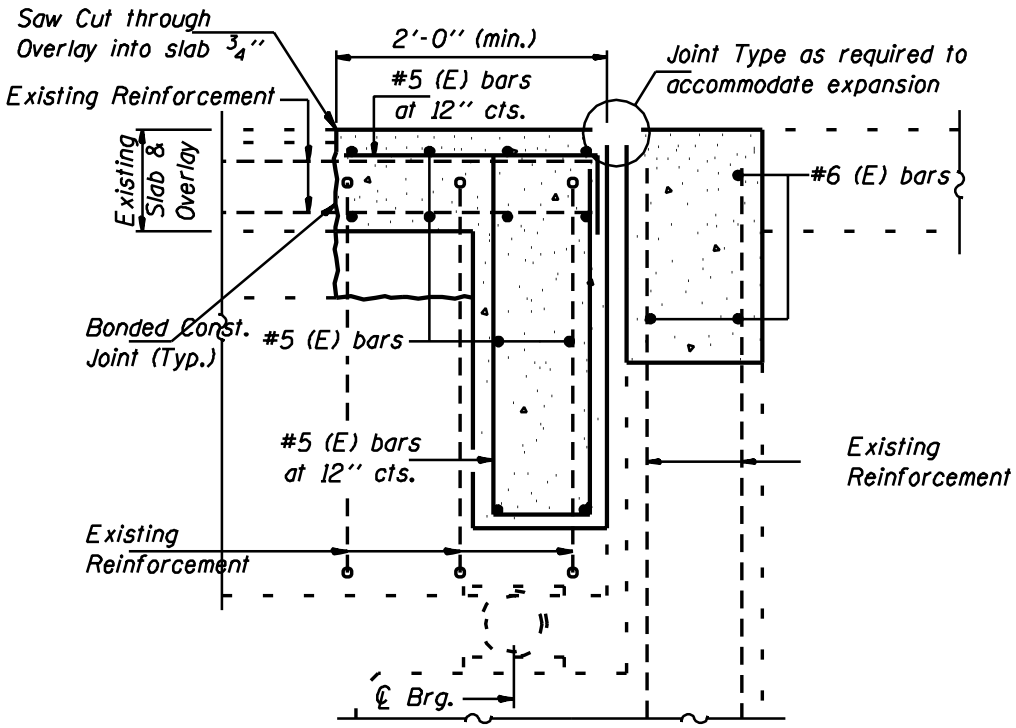

WITHOUT NEW OVERLAY

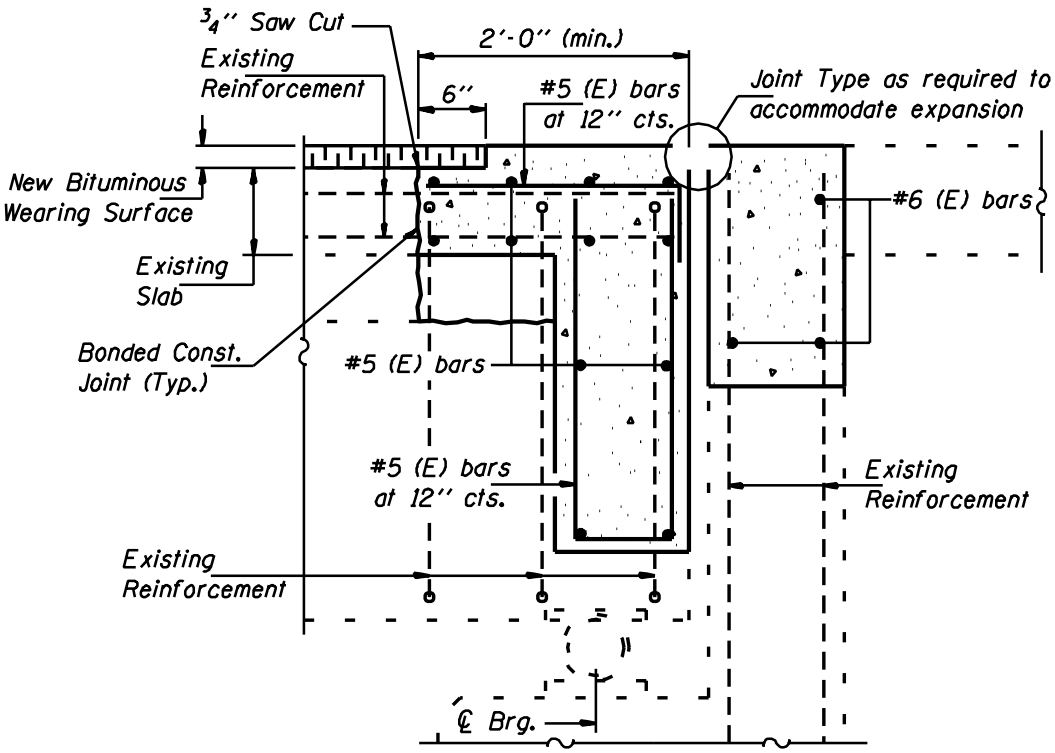

WITH BITUMINOUS WEARING SURFACE

Note: Existing Reinforcement Bars shown are to be cleaned and incorporated into new construction.

R.C. DECK GIRDER
JOINT RECONSTRUCTION
(FULL REMOVAL)

Figure 1.5.5-2

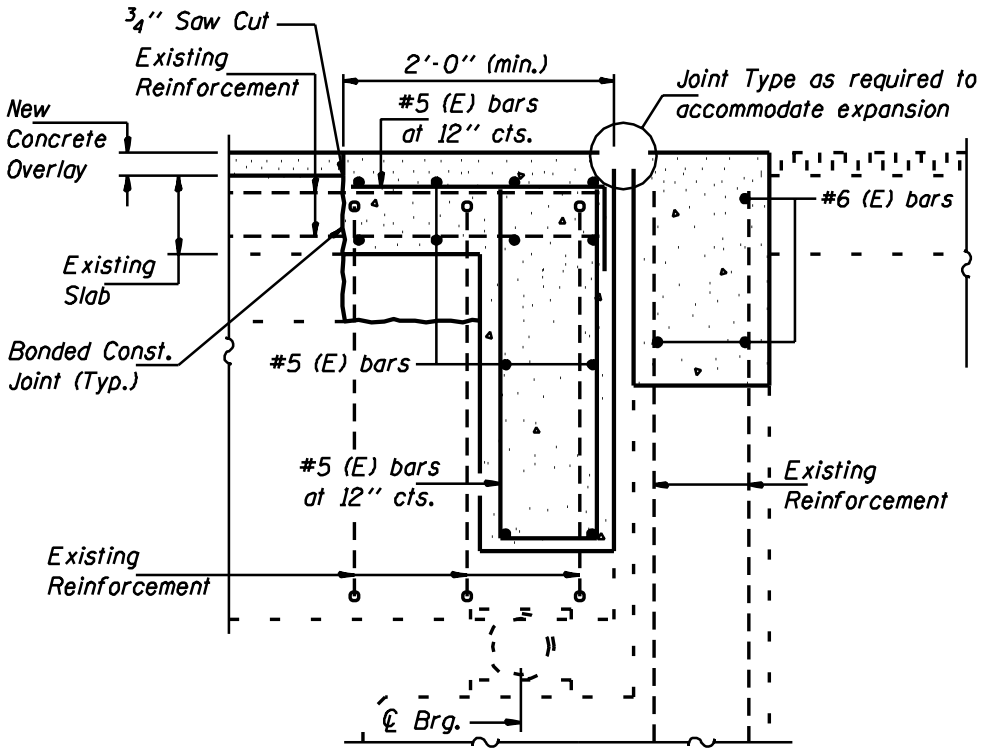

WITH CONCRETE OVERLAY

Note: Existing Reinforcement Bars shown are to be cleaned and incorporated into new construction.

R.C. DECK GIRDER
JOINT RECONSTRUCTION
(FULL REMOVAL)

Figure 1.5.5-3

1.5.6 Reinforced Concrete Slab

For reinforced concrete slab bridges, the concrete removal, concrete replacement and reinforcement bar requirements given for multi-beam bridges is preferred. In addition, if the ends of the existing longitudinal reinforcement bars in the bottom of the slab are not hooked, new hooked bars should be provided and lapped with the existing unhooked bottom longitudinal reinforcement bars in the area of slab removal and replacement. Figure 1.5.6-1 shows details for the removal and replacement of the end of a reinforced concrete slab during the replacement of an expansion joint.

Although not preferred, a limited partial-depth removal area in the immediate area of the joint can be utilized if inspection indicates that the slab concrete that will remain in the area of the joint is sound and analysis shows that the reduced end area is structurally adequate to support the structure during the joint replacement operations without need for temporary support. Refer to Figure 1.5.6-2 for details of partial slab removal and replacement.

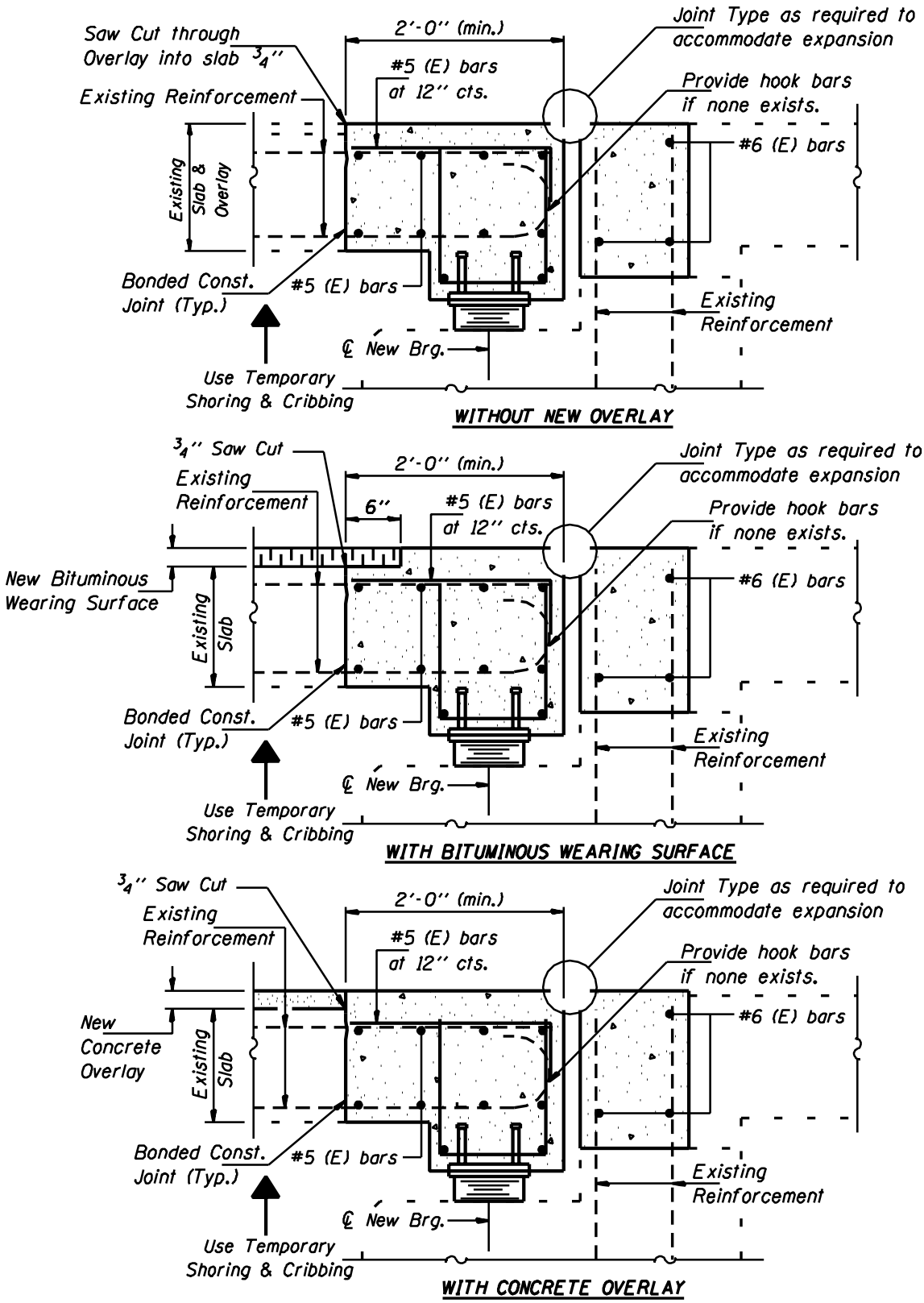

Note: Existing Reinforcement Bars shown are to be cleaned and incorporated into new construction.

JOINT RECONSTRUCTION FOR R.C. SLAB (FULL REMOVAL)

Figure 1.5.6-1

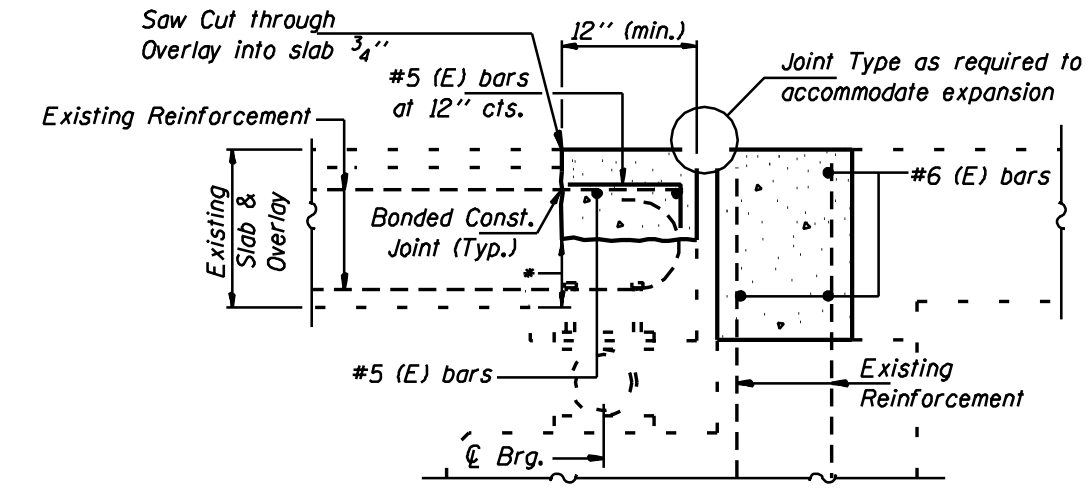

WITHOUT NEW OVERLAY

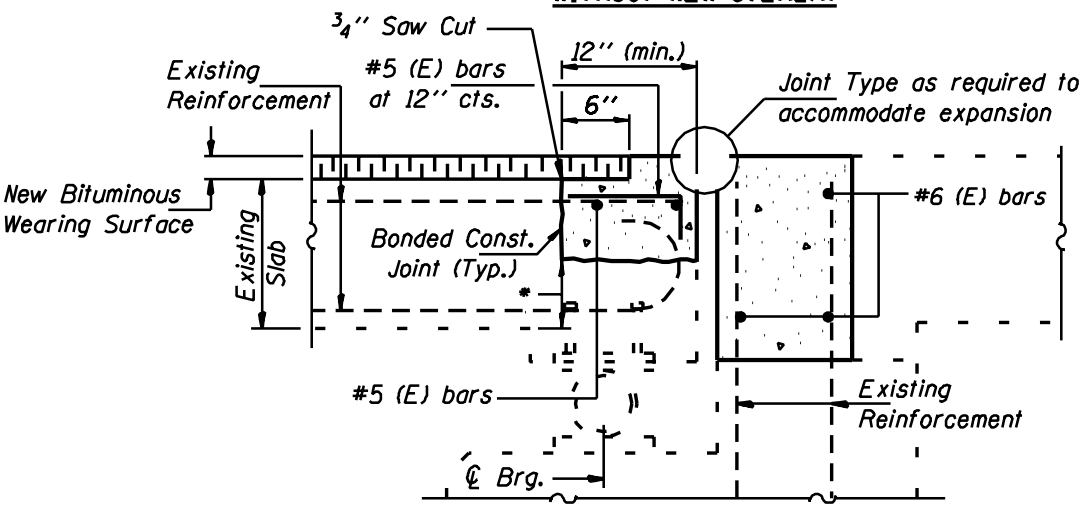

WITH BITUMINOUS WEARING SURFACE

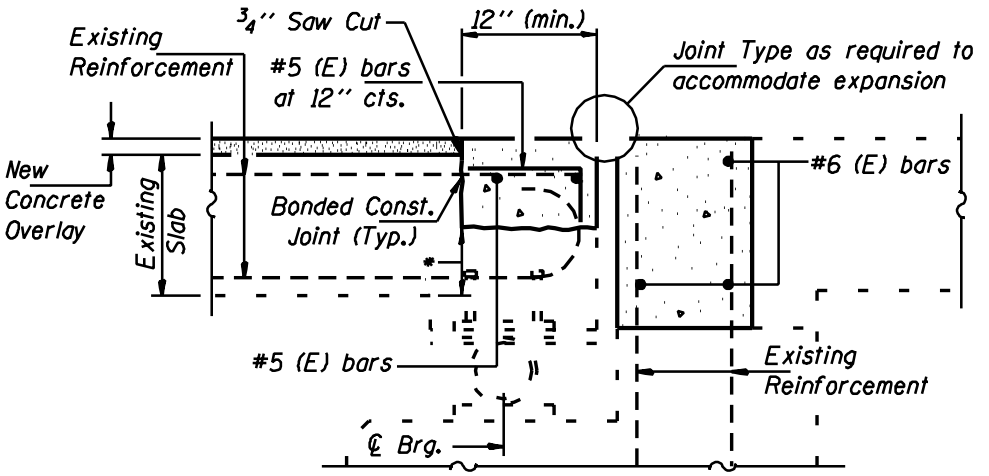

WITH CONCRETE OVERLAY

* The complete replacement of the end of the slab and Temporary Shoring and Cribbing are required when the existing concrete is found to be unsound or analysis shows that remaining depth of slab is not adequate to carry loads during the joint replacement. See Figure 1.5.6-1.

JOINT RECONSTRUCTION FOR R.C. SLAB (PARTIAL REMOVAL)

Figure 1.5.6-2

1.5.7 Precast Prestressed Concrete Deck Beams

When replacing an expansion joint on a PPC deck beam bridge, the existing structure plans should be consulted to determine if the ends of the beams were originally fabricated with 9"x10" blockouts for the placement of cast-in-place concrete in the field during construction. If blockouts were provided, the original cast-in-place concrete can be removed and replaced in conjunction with the expansion joint replacement as shown in Figure 1.5.7-1. All existing reinforcement bars and anchorage devices within the existing blockout areas of PPC deck beams which extend into the precast concrete beam should be cleaned and incorporated into the new construction. The existing reinforcement bars placed parallel to the expansion joint in the area of the blockout should be removed and replaced with new reinforcement bars. If the existing PPC deck beams were not fabricated with blockouts, concrete removal should be limited in depth to the top layer of the existing reinforcement bars at the ends of the PPC deck beams.

When an existing bituminous concrete overlay is being replaced in-kind, the existing steel armoring elements cast into the beams should be reused as part of the new expansion joint details, as shown in Figure 1.5.7-2. The details shown in Figure 1.5.7-3 should be utilized to provide a modified armoring element for small preformed joint sealer type joints, when a new reinforced concrete overlay is placed on PPC deck beams. Occasionally, a neoprene expansion joint must be used in lieu of a preformed joint seal in order to accommodate the geometry encountered at an existing expansion joint.

When installing a neoprene expansion joint on an existing PPC deck beam, shimming is often necessary to place the top of the joint at the proper elevation relative to the roadway surface. This can be accomplished using a polymer concrete as the shimming material as shown in Figure 1.5.7-4 .

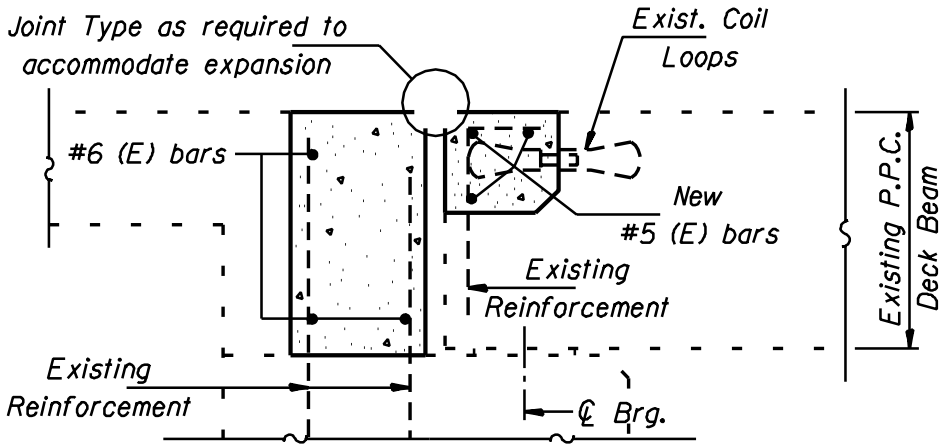

AT ABUTMENTS

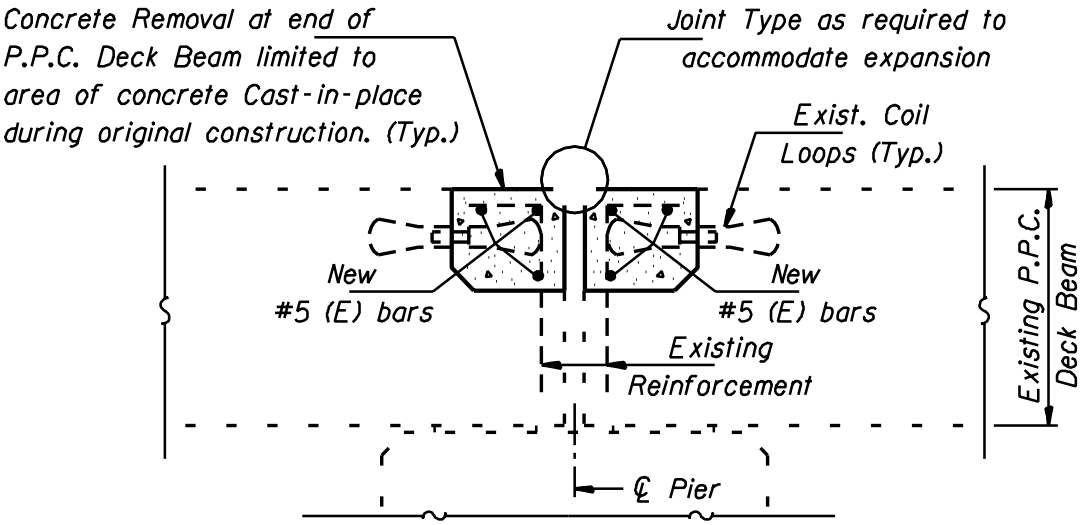

AT PIERS

REMOVAL & REPLACEMENT

Note: Existing Reinforcement Bars and Coil Loops shown are to be cleaned and incorporated into new construction except as noted.

P.P.C. DECK BEAM JOINT RECONSTRUCTION (BLOCKOUT REMOVAL)

Figure 1.5.7-1

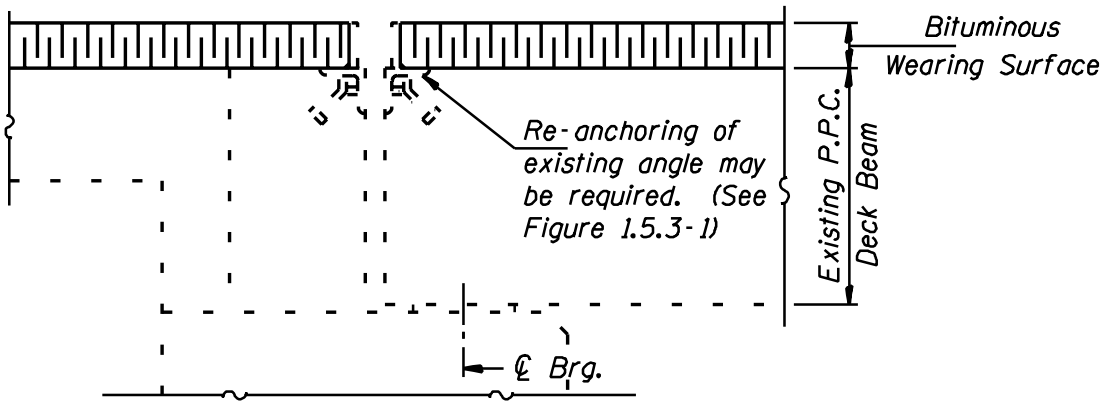

AT ABUTMENTS

(When re-anchoring is not required)

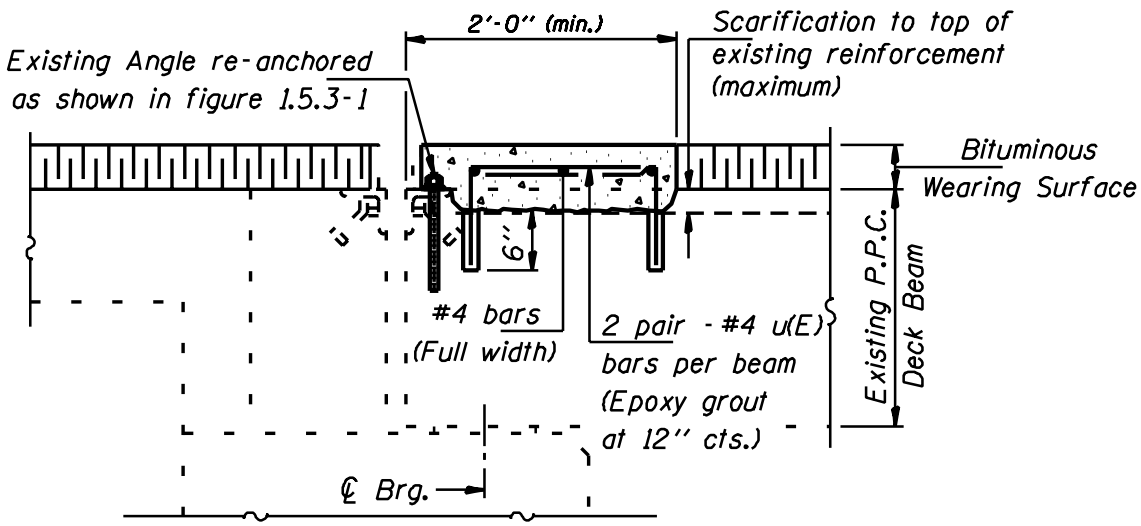

AT ABUTMENTS

(When re-anchoring is required)

P.P.C. DECK BEAM
JOINT RECONSTRUCTION

Figure 1.5.7-2

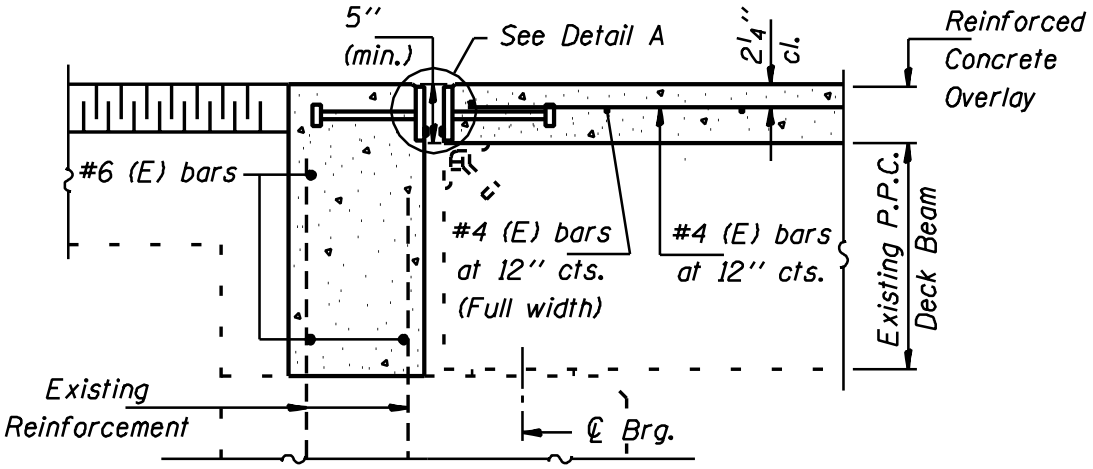

SECTION AT ABUTMENT

Minimum bar lap for #4 bars = 1'-4''

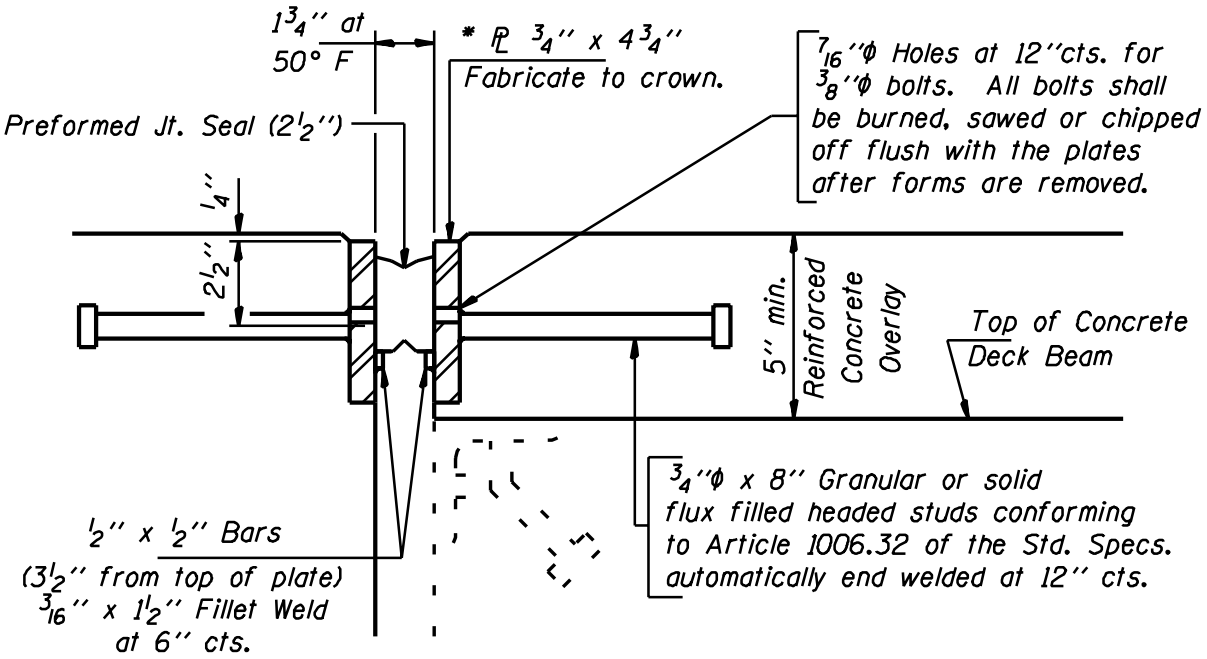

DETAIL A

* Furnish in segments of 20 ft. maximum length. Maximum space between installed segments shall be 3/16''. Seal space with Silicone Sealant suitable for Structural Steel.

Note: After fabrication all surfaces of the steel plates shall be given one shop coat of paint specified for Structural Steel. No field painting required.

PPC DECK BEAM EXPANSION JOINT RECONSTRUCTION WITH REINFORCED CONCRETE OVERLAY

Figure 1.5.7-3

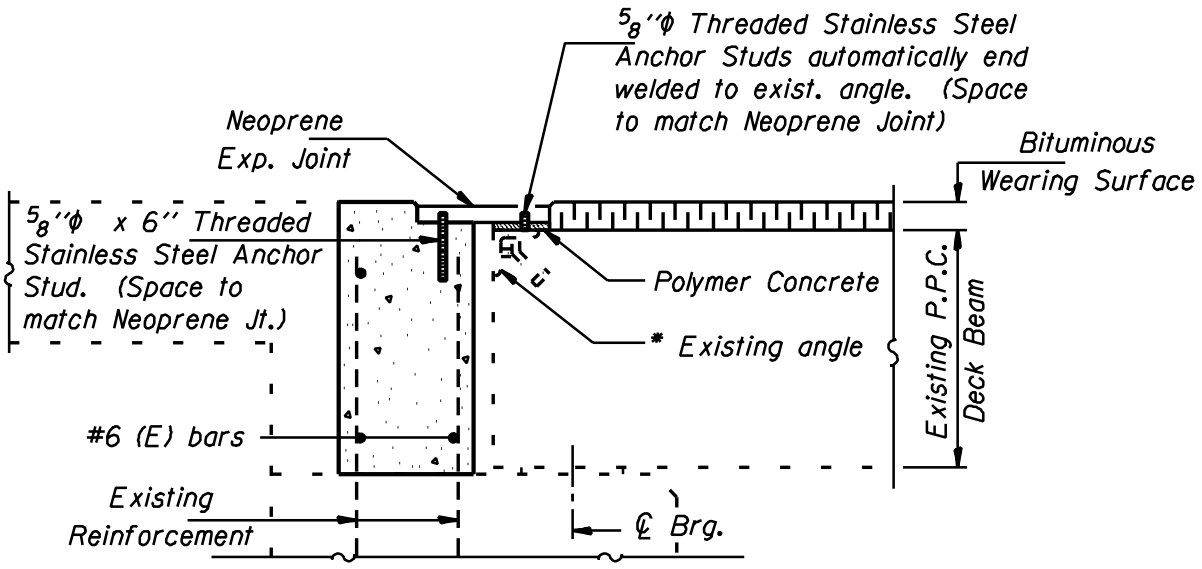

AT ABUTMENTS

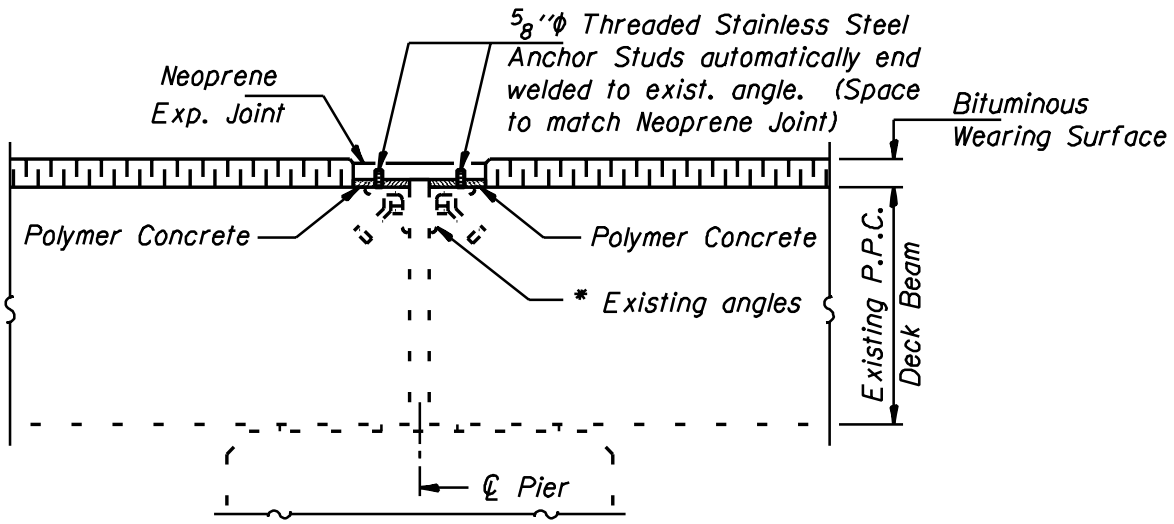

AT PIERS

* Re-anchoring of existing expansion angles may be required. See Figure 1.5.3-1, and space 5/8"ϕ Threaded Stainless Steel Anchor Rods to match the neoprene joint.

P.P.C. DECK BEAM JOINT RECONSTRUCTION (NEOPRENE)

Figure 1.5.7-4

1.5.8 Concrete Removal Limits and Reinforcement Bar Lapping

Regardless of the type of structure, expansion joint replacements should extend across the entire (out-to-out) width of the structure. The replacement joint should effectively seal the existing curb, sidewalk and parapet in a manner similar to new construction. Bonded construction joints should be provided between the existing concrete slab or beam and the replacement concrete.

An approved bar splicing device or anchorage system should be used to install new longitudinal reinforcement bars in deck slabs, slab bridges or new end block reinforcement in PPC deck beams, when the existing reinforcement bars do not extend a sufficient distance into the new construction or cannot be salvaged. Provisions should also be made for lapping or splicing reinforcement bars which extend across a stage construction joint.

Refer to Figure 1.5.8-1 for a general illustration of concrete removal limits and reinforcement bar treatment requirements. A similar detail should be included in all repair plans for joint replacements.

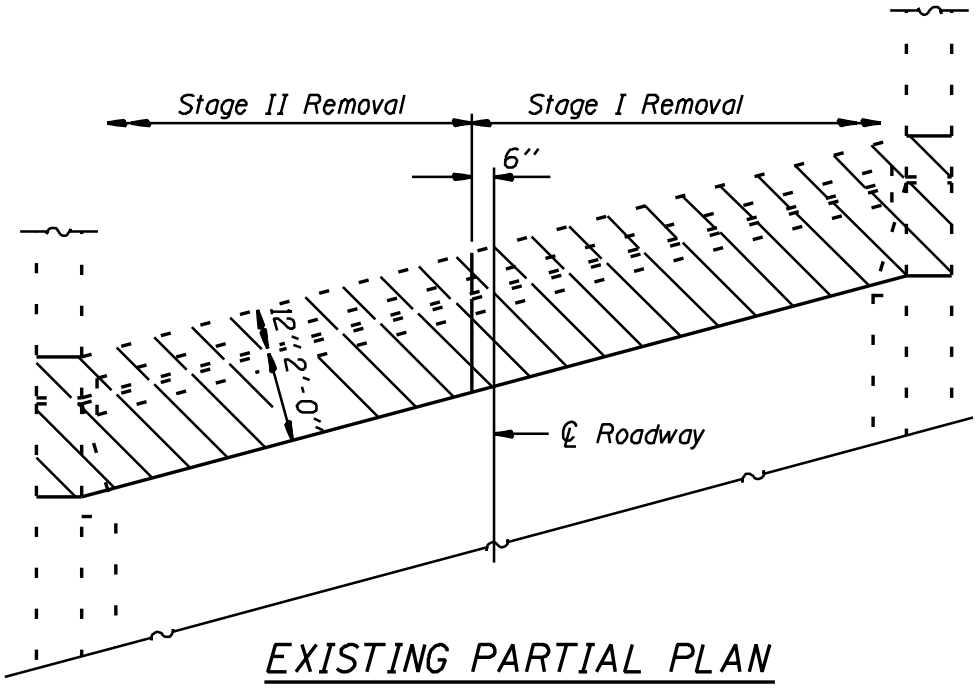

EXISTING PARTIAL PLAN

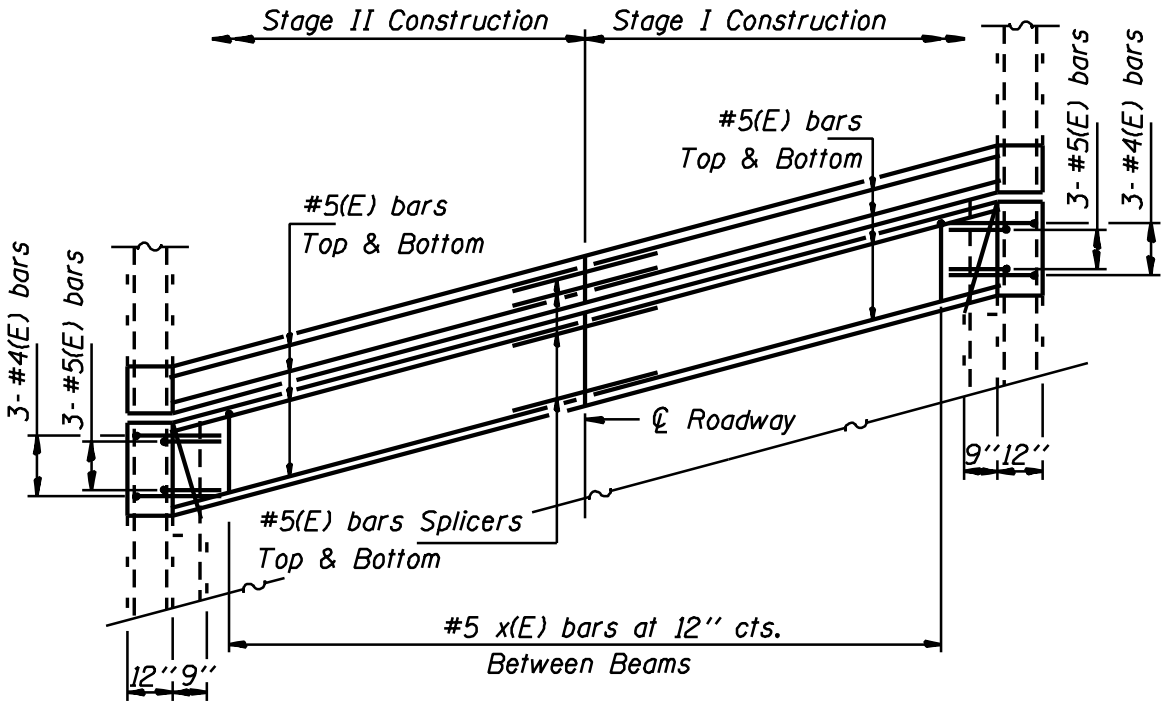

PROPOSED PARTIAL PLAN

PLAN OF JOINT RECONSTRUCTION

Figure 1.5.8-1

1.5.9 Steel Finger Plate Joint

When developing plans for the installation of steel finger plate joints, the information shown in the existing design plans and shop plans should be verified. Construction delays can occur when existing diaphragms or beam ends are found at different locations or elevations than those indicated by the existing plans. In order to avoid the necessity to refabricate or redesign the joint during construction, the District should provide the engineer designing the joint with field measurements showing the location of the existing diaphragms, beam ends and bearings relative to the proposed joint opening and top of deck. Figure 1.5.9-1 and Figure 1.5.9-2 indicate typical dimensions which are critical for the accurate detailing of steel finger joint replacement plans. When the grade is raised at a finger plate expansion joint, the joint can be retrofitted as shown in Figure 1.5.9-3.

A note should be added to the plans as follows: Tapered shims shall be added under the stools as required by the Engineer to make a smooth finger joint. Cost shall be included in the cost of “Furnishing and Erecting Structural Steel”.

Concrete deck removal shall consist of 3′-6″ minimum on each side of the centerline of the joint to allow room for the placement of the new finger plate and reinforcement bars.

1.5.10 Existing Neoprene Joint

When raising the grade at a neoprene expansion joint, the joint can be retrofitted as shown in Figure 1.5.10-1. In these details the grade is raised by the thickness of the new bituminous wearing surface or concrete overlay.

Structure No. _ _ _ _ _ _ _ _ _
Temperature _ _ _ _ _ _ _ _ _
Date _ _ _ _ _ _ _ _ _ _ _ _ _ _

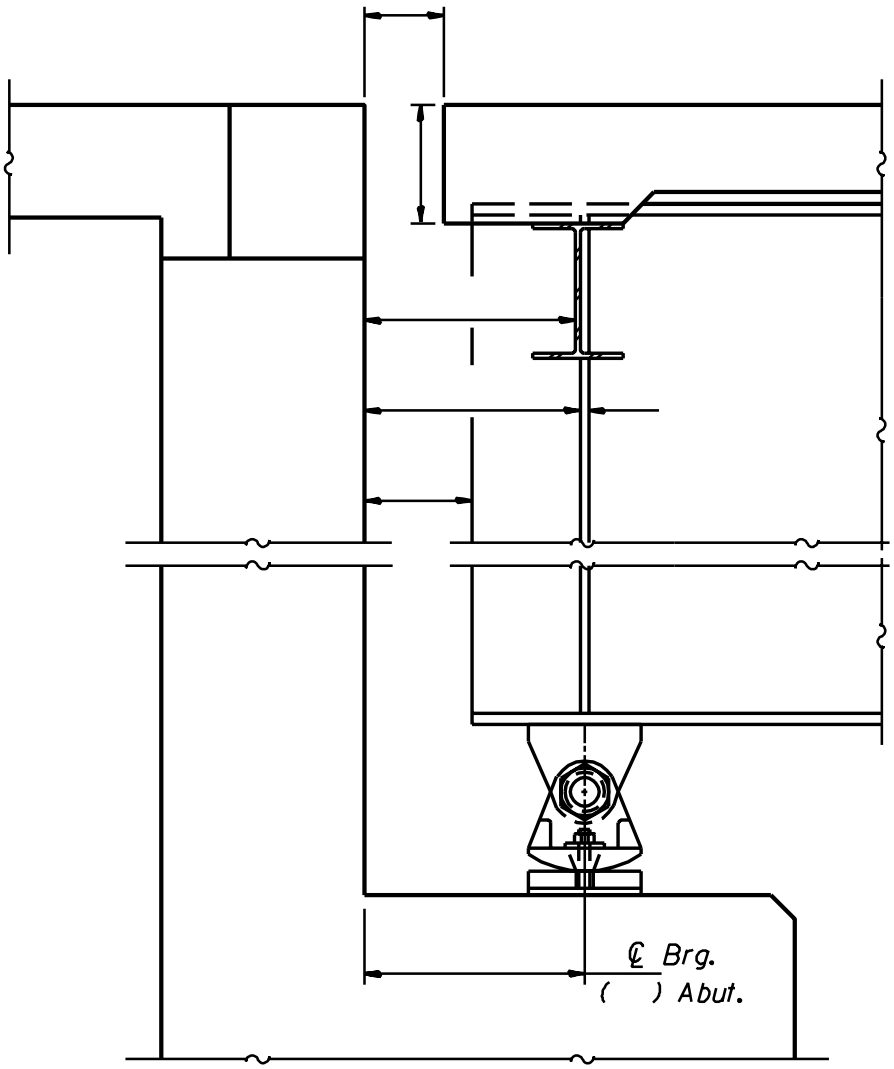

FINGER JOINT
FIELD DIMENSIONS
(AT ABUTMENT)

Figure 1.5.9-1

Structure No. _ _ _ _ _ _ _ _ _
Temperature _ _ _ _ _ _ _ _ _
Date _ _ _ _ _ _ _ _ _ _ _ _ _

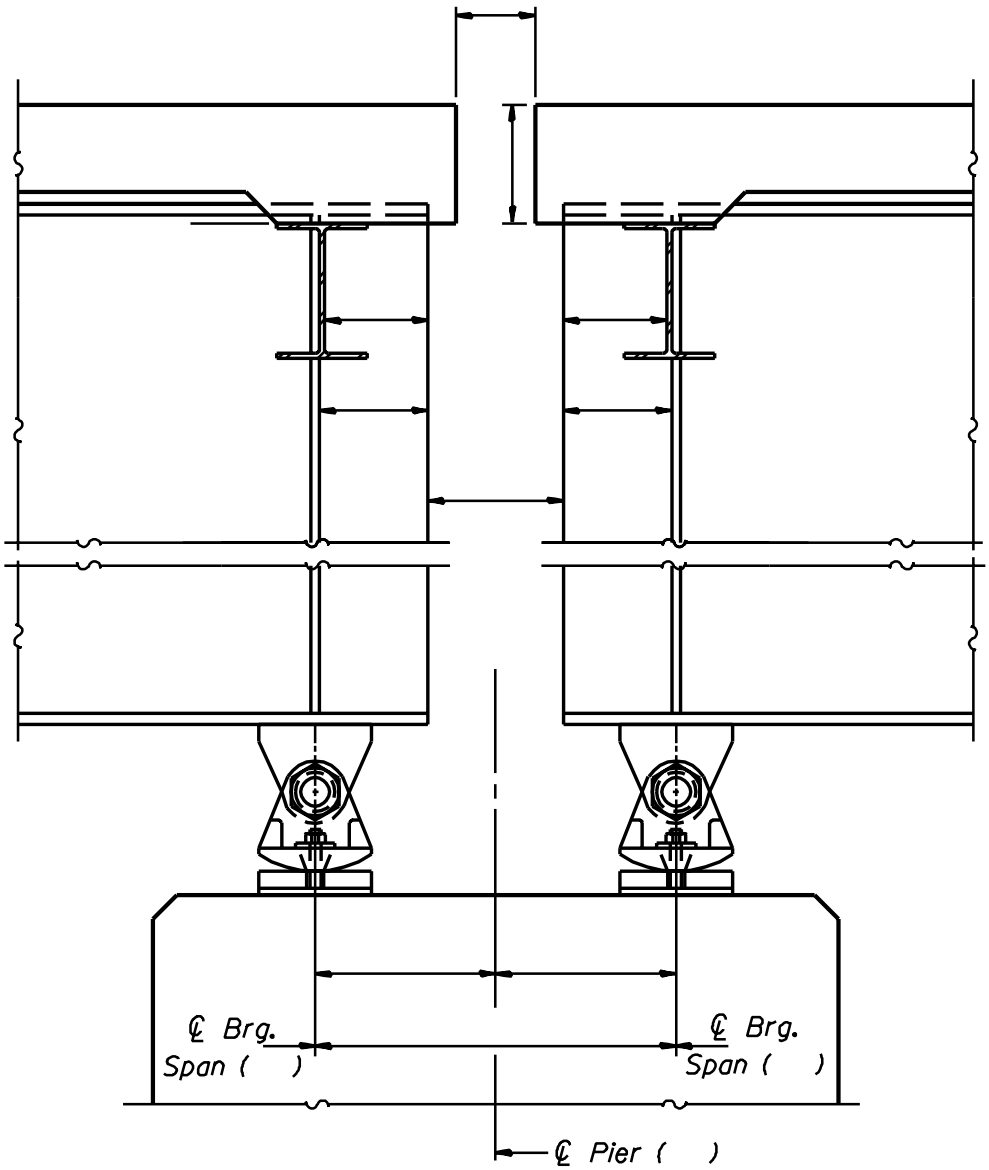

FINGER JOINT
FIELD DIMENSIONS
(AT PIER)

Figure 1.5.9-2

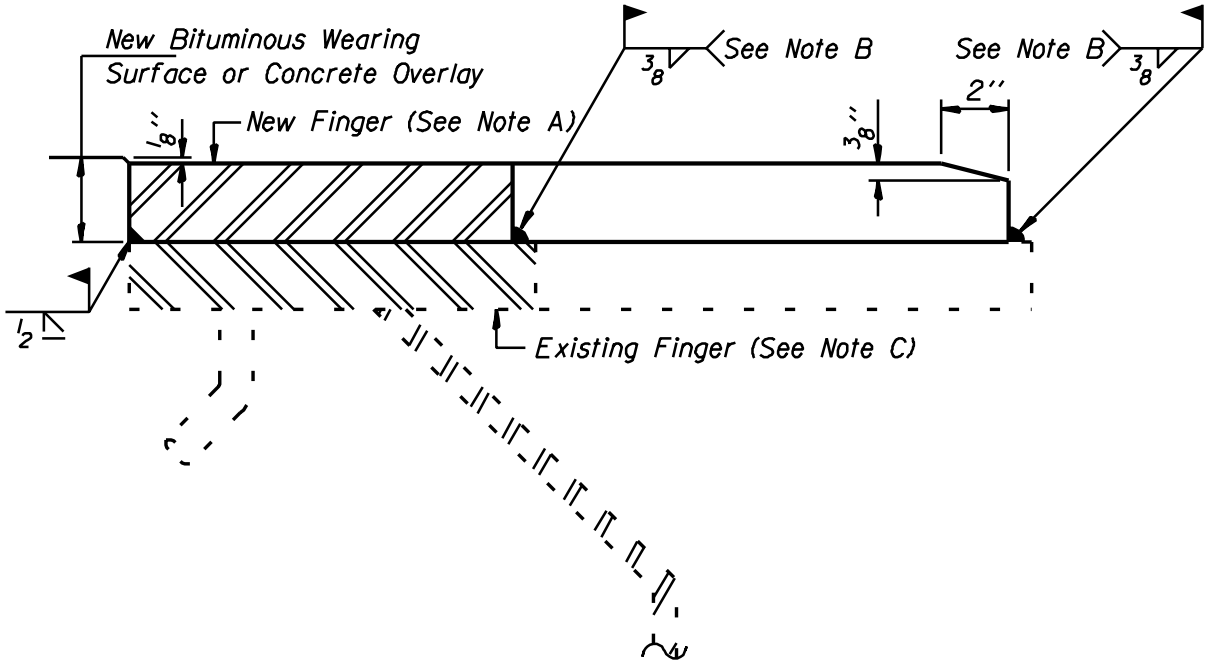

SECTION A-A

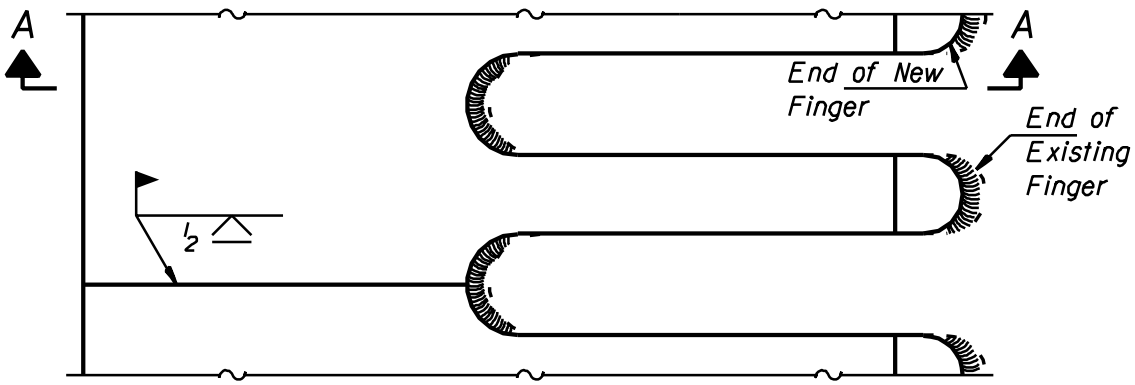

Note A:
New Finger shall be blast cleaned to SSPC SP 10 and shop painted with the inorganic zinc rich primer.

Note B:
Fillet weld sizes at ends (tips) and crotches of fingers shall vary from 3/8" near centers to 3/16" minimum near edges as new and existing plates converge.

Note C:
Existing Finger widths and exact locations must be field verified. A template shall be made to insure alignment. Remove foreign material that would prevent uniform contact between new and existing plates by method approved by the Engineer.

EXPANSION JOINT TREATMENT WITH GRADE RAISE AND EXISTING FINGER PLATES

Figure 1.5.9-3

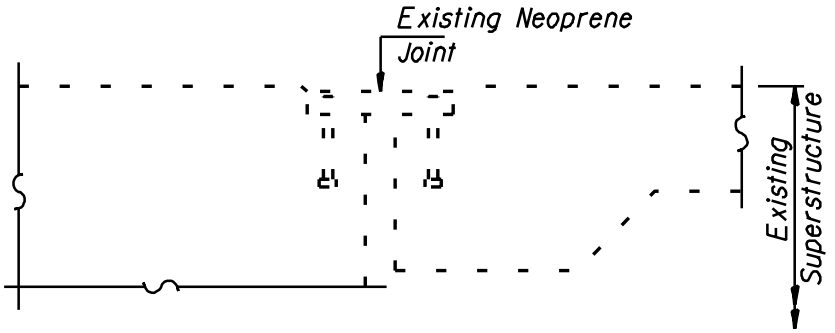

SECTION AT EXPANSION JOINT

(Showing existing neoprene joint)

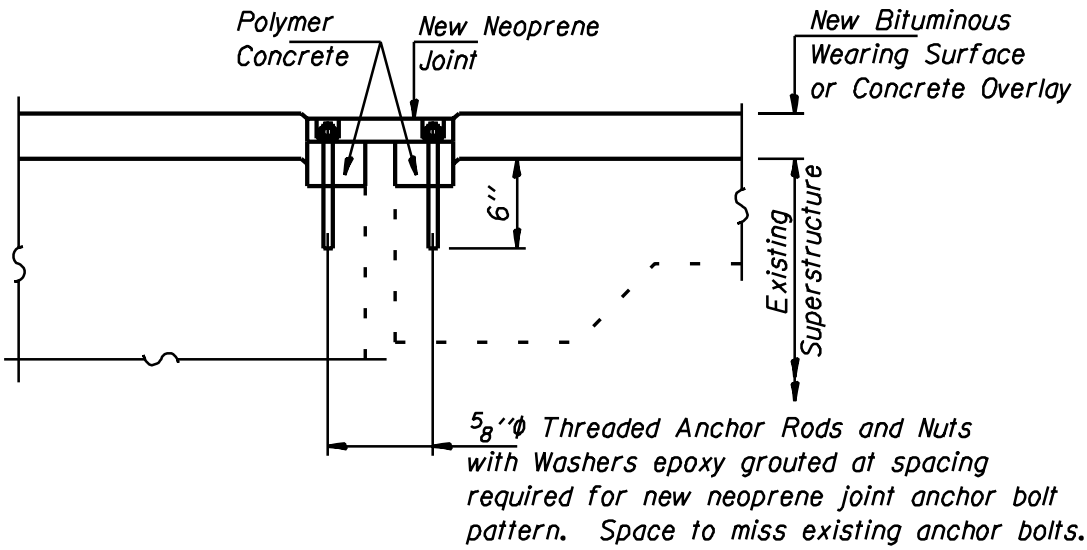

SECTION AT EXPANSION JOINT

(Showing new neoprene joint)

EXPANSION JOINT TREATMENT WITH GRADE RAISE AND EXISTING NEOPRENE

Figure 1.5.10-1

1.6 Longitudinal Joint Closure

1.6.1 General

Maintaining an effective seal against the intrusion of water, chlorides and other contaminants through a leaking longitudinal deck joint is very difficult. The beams or girders supporting the deck are often adversely affected by moisture and deicing agents passing through poorly sealed longitudinal joints. One solution to the problem of a leaking longitudinal joint is the removal of the existing joint seal along with a portion of the adjacent concrete deck and the construction of a new segment of continuous reinforced concrete deck (without a sealed longitudinal joint). This method of eliminating the leaking longitudinal joints can be applied to all concrete superstructures with out-to-out deck widths of 90 feet or less. The Bureau of Bridges and Structures should be consulted when considering the closure of an existing longitudinal joint on a superstructure with a out-to-out of deck width greater than 90 feet.

1.6.2 Concrete Removal Limits

The width of the existing deck to be removed will depend on the distance between the beams or girders adjacent to the joint. The width of the removal of the existing concrete deck should be limited so that the deck removal does not extend beyond the centerline of the adjacent beam or girder. When the existing superstructure is a reinforced concrete deck girder, the removal should not extend beyond the stirrup reinforcement bars of the girder adjacent to the existing longitudinal joint. When shear stud connectors are present on the existing beams or girders, the limits of removal should be adjusted so that the remaining and new concrete will adequately encase the shear studs. These requirements are illustrated in Figure 1.6.2-1. When the existing superstructure is a reinforced concrete slab bridge, removal of the edge beam at the longitudinal joint will require temporary shoring and cribbing at the expansion bents if the slab was supported on bearings.

Bonded construction joints should be specified for the joints between the existing concrete deck and the new construction. When a bituminous concrete surface and waterproofing membrane system will be placed on the deck, the waterproofing membrane should extend a minimum of 6 inches across the construction joint in the deck.

1.6.3 Reinforcement Bar Treatment

The length of existing transverse reinforcement exposed by the deck removal should be checked to determine if it can be lapped with the new transverse reinforcement bars sufficiently to develop the capacity of the reinforcement bar. When deck removal is limited and the transverse reinforcement bars cannot be lapped to develop the full reinforcement bar capacity, the new bottom transverse reinforcement bars should be hooked at each end.

All exposed existing longitudinal reinforcement bars should be removed and replaced. Existing transverse reinforcement bars should remain in place and should be cleaned and incorporated into the new construction. All new reinforcement bars should be epoxy coated. The typical features to be incorporated in a longitudinal joint closure are shown in Figures 1.6.3-1, 1.6.3-2 and 1.6.3-3 for a project without an existing deck overlay, with an existing bituminous concrete overlay and with a proposed overlay respectively. Figure 1.6.3-4 shows a longitudinal joint closure for a reinforced concrete girder bridge with an overlay.

For a reinforced concrete slab bridge, new longitudinal reinforcement should be added to match the size and spacing of the reinforcement of the existing slab section adjacent to the edge beam being removed. See Figure 1.6.3-5.

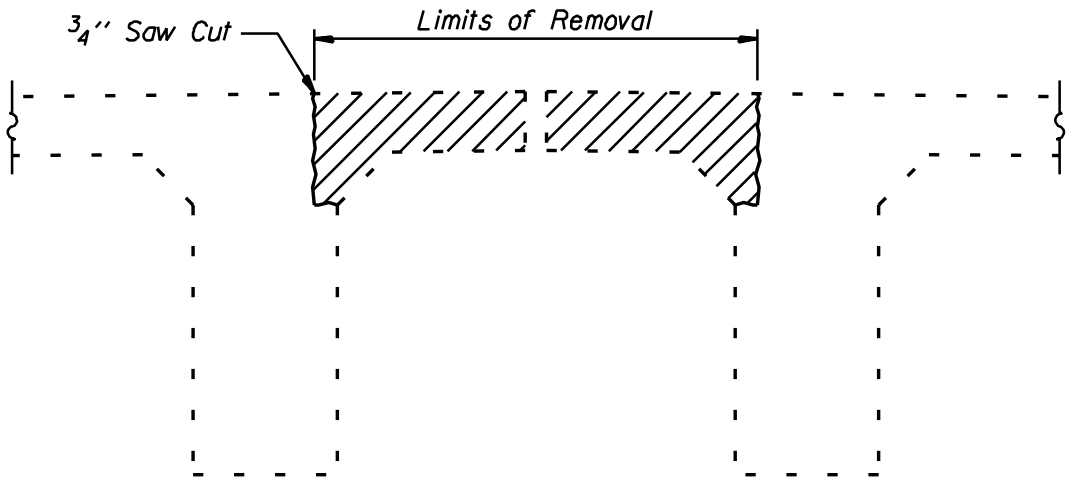

R.C. DECK GIRDERS

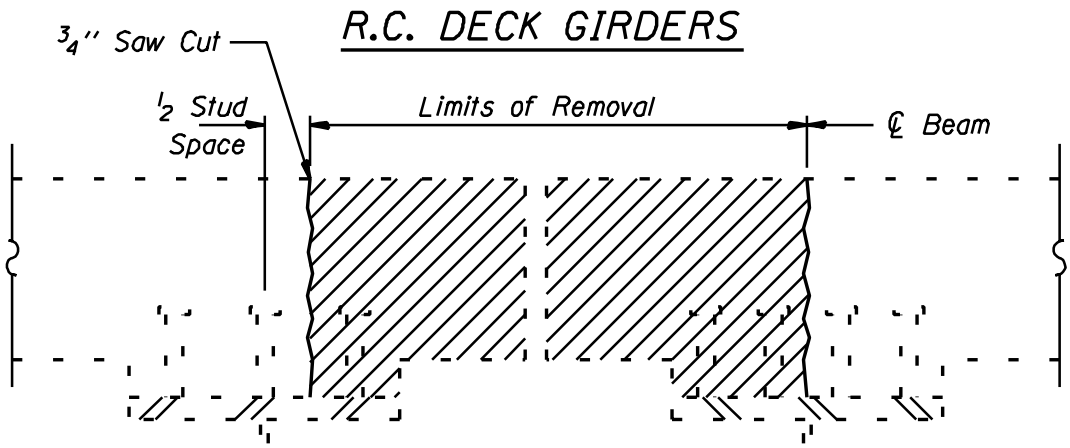

COMPOSITE BEAMS

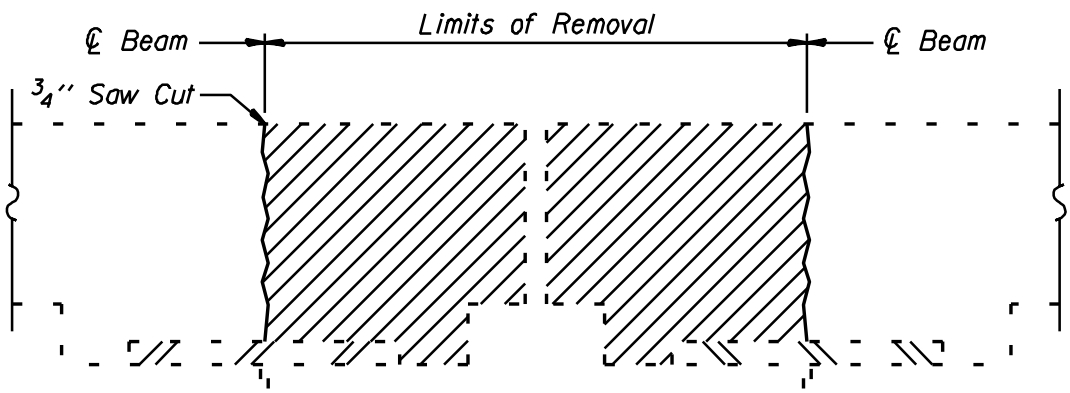

NONCOMPOSITE BEAMS

LONGITUDINAL JOINT REMOVAL LIMITS

Figure 1.6.2-1

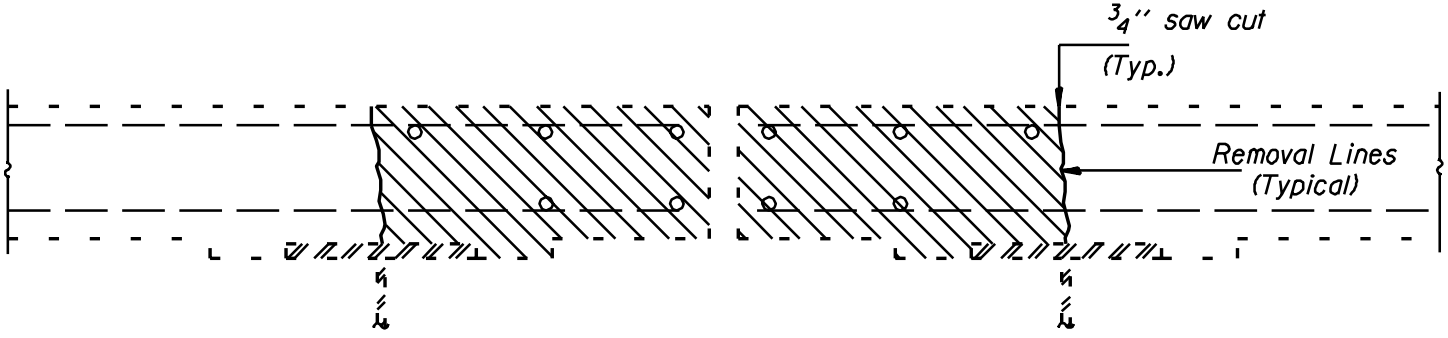

EXISTING LONGITUDINAL JT. CROSS SECTION

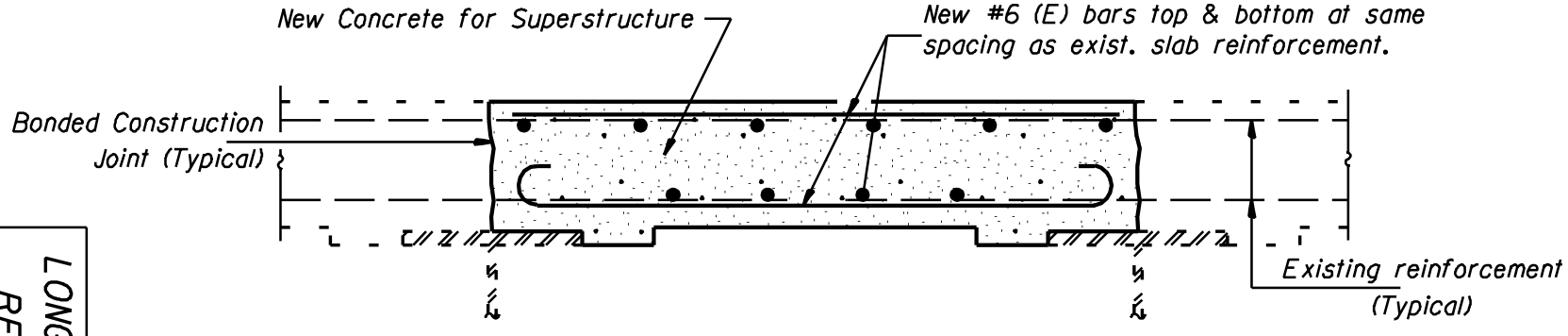

RECONSTRUCTED LONGITUDINAL JOINT

Note: Hatched areas indicate concrete sections to be removed. Perimeters of Concrete Removal areas shall be saw cut 3/4" prior to the removal of the concrete. Existing transverse reinforcement shall be cleaned straightened and incorporated into the new construction. New reinforcement bars shall be epoxy coated.

LONGITUDINAL JOINT RECONSTRUCTION WITHOUT OVERLAY

Figure 1.6.3-1

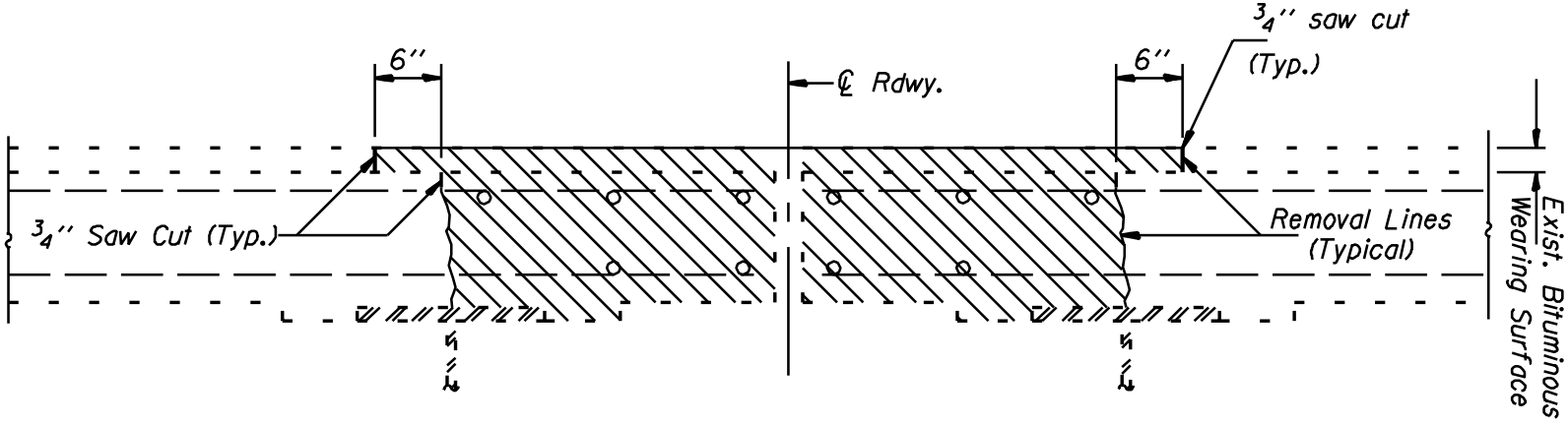

EXISTING LONGITUDINAL JOINT CROSS SECTION

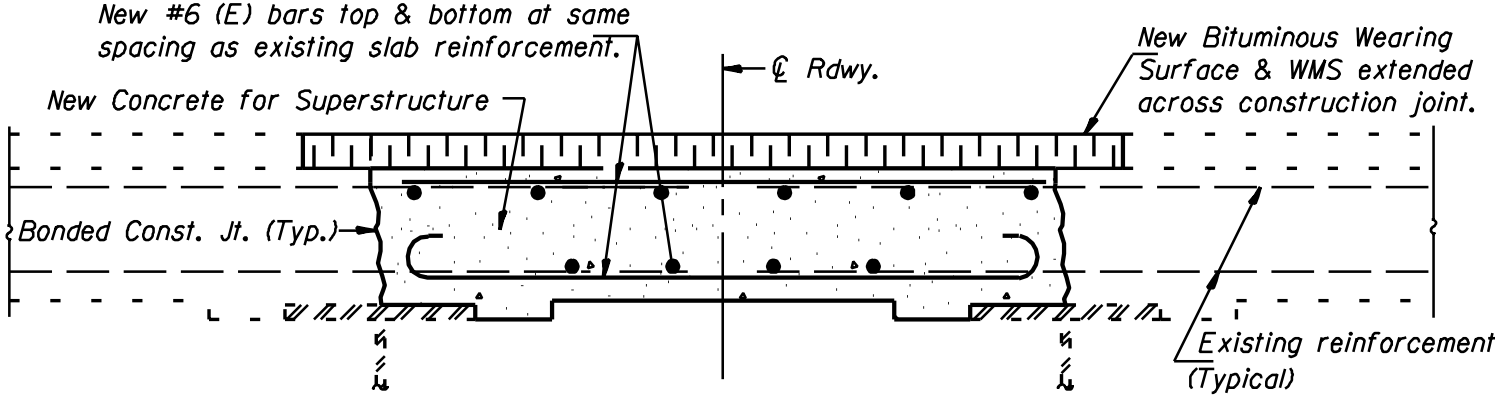

RECONSTRUCTED LONGITUDINAL JOINT

Note: Hatched areas indicate concrete and class I sections to be removed. Perimeters of Concrete and Class I Removal areas shall be saw cut 3/4" prior to the removal of the concrete and Class I. Existing transverse reinforcement shall be cleaned straightened and incorporated into the new construction. New reinforcement bars shall be epoxy coated.

LONGITUDINAL JOINT
RECONSTRUCTION WITH
EXISTING BITUMINOUS OVERLAY

Figure 1.6.3-2

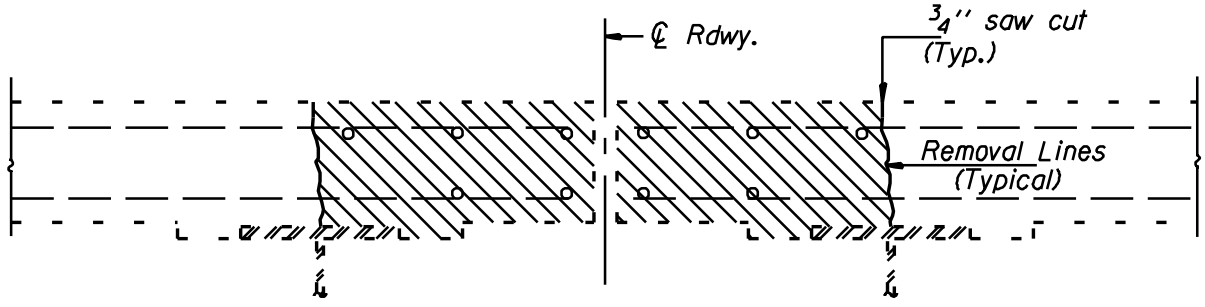

EXISTING LONGITUDINAL JOINT CROSS SECTION

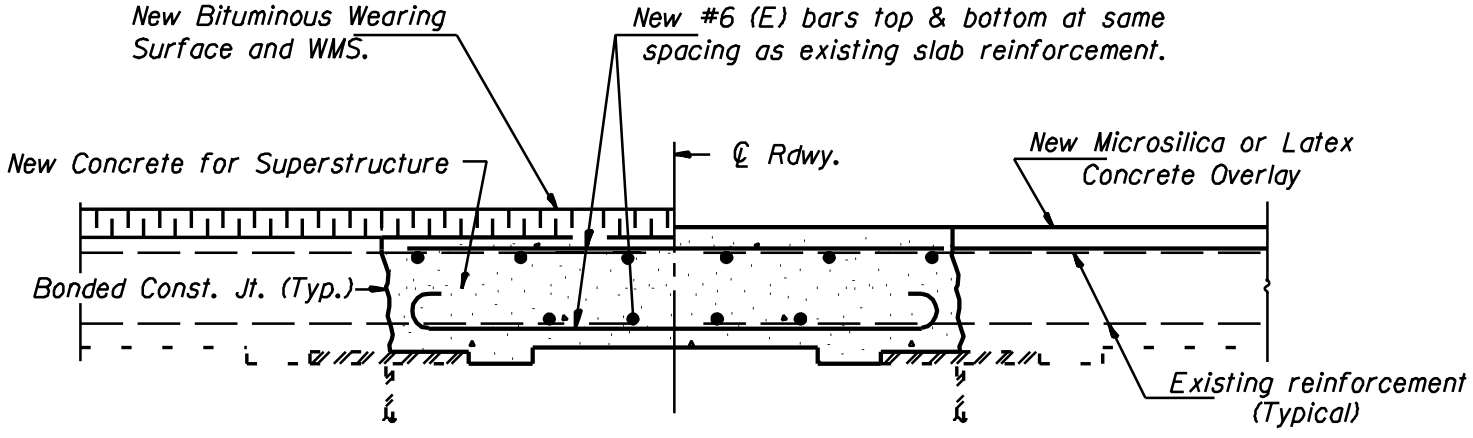

BITUMINOUS BRIDGE DECK OVERLAY

CONCRETE BRIDGE DECK OVERLAY

RECONSTRUCTED LONGITUDINAL JOINT

Note: Hatched areas indicate concrete sections to be removed. Perimeters of Concrete Removal areas shall be saw cut 3/4'' prior to the removal of the concrete. Existing transverse reinforcement shall be cleaned straightened and incorporated into the new construction. New reinforcement bars shall be epoxy coated.

LONGITUDINAL JOINT
RECONSTRUCTION WITH
NEW OVERLAY

Figure 1.6.3-3

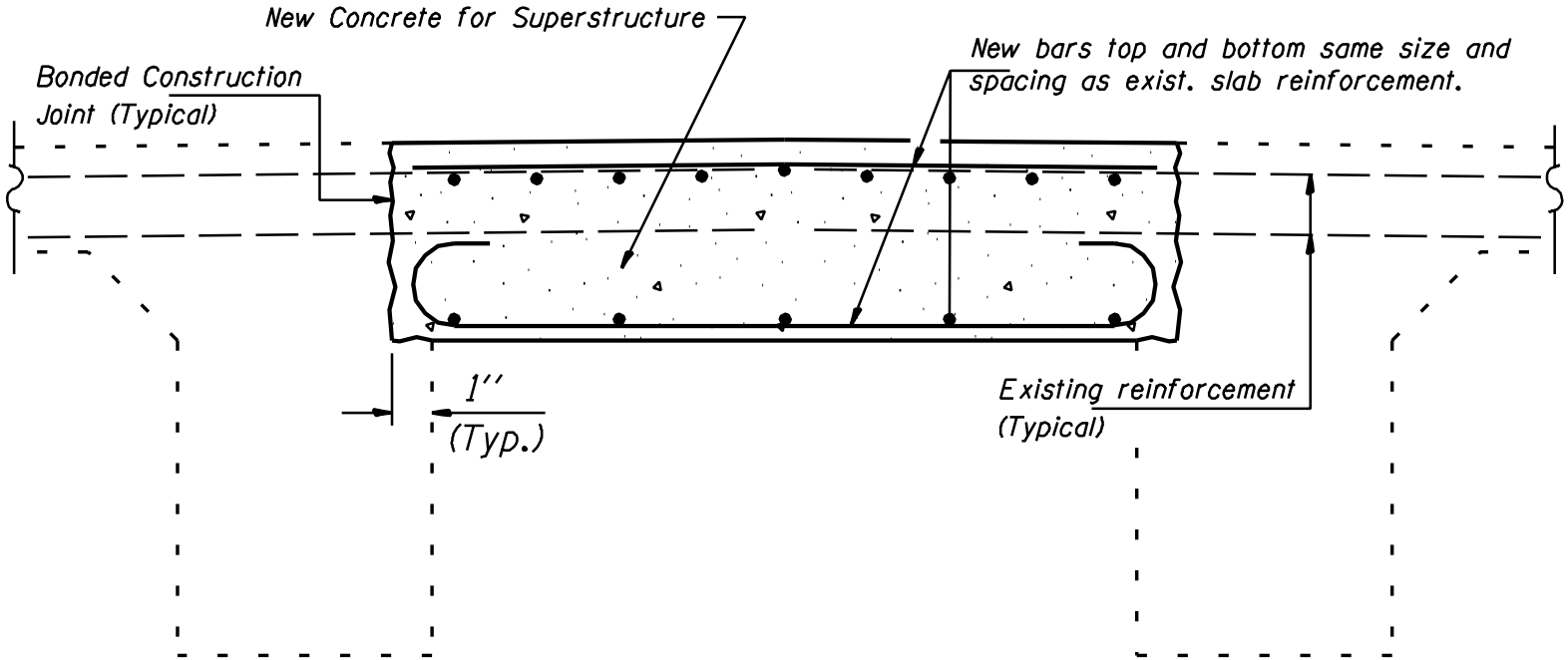

RECONSTRUCTED LONGITUDINAL JOINT

Note: Existing transverse reinforcement shall be cleaned straightened and incorporated into the new construction. New reinforcement bars shall be epoxy coated.
If a new bituminous wearing surface or concrete overlay is required, refer to Figure 1.6.3-3.

LONGITUDINAL JOINT
RECONSTRUCTION WITH
R.C. DECK GIRDERS

Figure 1.6.3-4

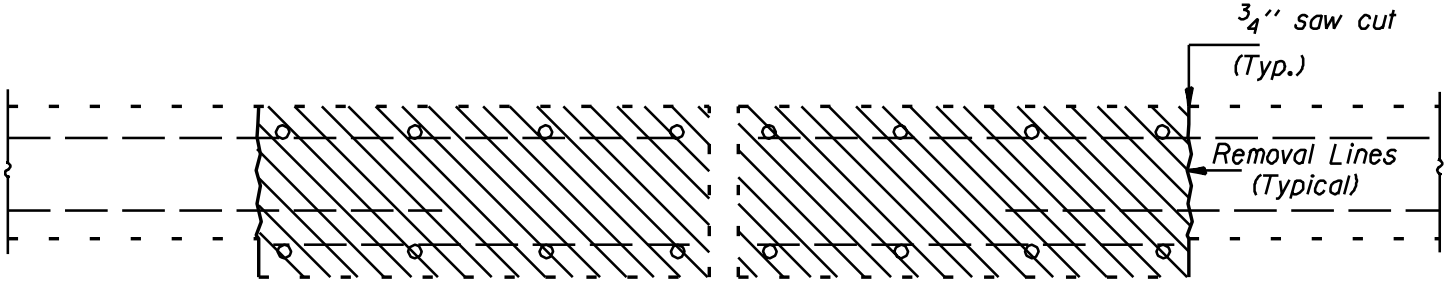

EXISTING LONGITUDINAL JT. CROSS SECTION

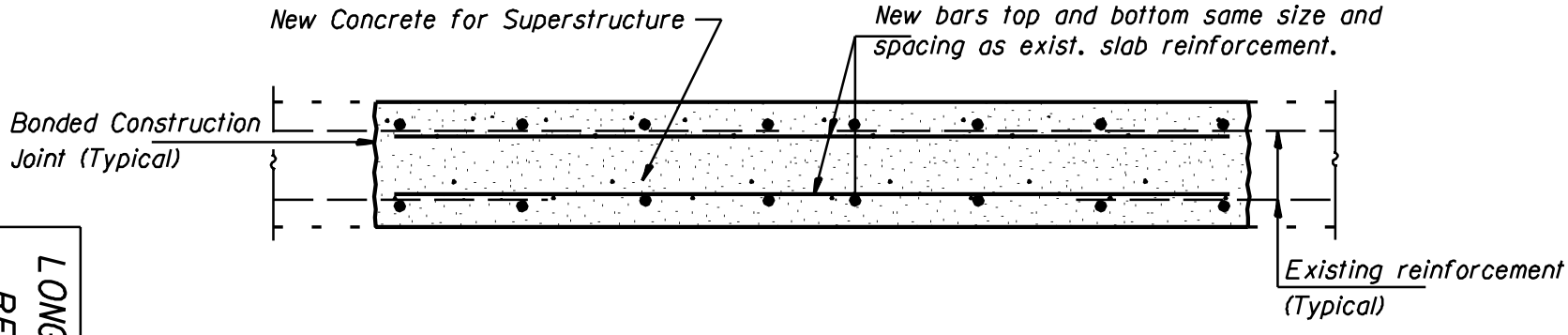

RECONSTRUCTED LONGITUDINAL JOINT

Note: Hatched areas indicate concrete sections to be removed. Perimeters of Concrete Removal areas shall be saw cut 3/4'' prior to the removal of the concrete. Existing transverse reinforcement shall be cleaned straightened and incorporated into the new construction. New reinforcement bars shall be epoxy coated.

LONGITUDINAL JOINT RECONSTRUCTION WITH R.C. SLAB

Figure 1.6.3-5

1.6.4 Diaphragms / Crossframes

Diaphragms or crossframes should be installed, when not already in place, between existing steel beams or girders adjacent to the existing longitudinal joint being closed, except that end diaphragms and diaphragms directly over interior piers are not required. When the distance between the beams adjacent to the longitudinal joint is 4 feet or less and traffic on the deck will be far enough away from the longitudinal joint so as not to cause excessive differential liveload deflection in the beams during the joint reconstruction, the installation of diaphragms is not required. To insure a minimum amount of liveload deflection in beams without diaphragms adjacent to longitudinal joints, traffic should be kept at least three beam spaces away from the beams adjacent to the longitudinal joint during placement and curing of the closure slab.

The diaphragms or crossframes and their connections should be detailed to account for the installation difficulties presented by small beam or girder spacing and dimensional variations for existing members typically encountered. This typically requires that end attachment angles be field bolted to the diaphragm using slotted or oversized holes during installation and that the flanges of the diaphragms be clipped to allow them to be swung into place between the existing beams. Place proposed diaphragms midway between existing diaphragms whenever possible, however locate diaphragms to avoid existing splice plates. If a small skew does not permit midway placement, locate the proposed diaphragms approximately one foot from the centerline of one of the existing diaphragms.

1.7 Bridge Rails and Parapets

1.7.1 Project Requirements

Bridge rails and parapets on structures to be repaired using Federal or State Funds should be repaired or retrofitted as required by the "Guidelines for Bridge Deck Repair Projects". For structures being repaired using Maintenance Funds, damaged portions of the existing bridge rail or parapet should be repaired and consideration should be given to installing a crash tested replacement rail on structures with bridge rails which do not meet the current geometric or structural requirements for vehicle induced loadings.

All replacement rails on projects to be implemented using Maintenance Funds must be designed to withstand the lateral loads specified in the current edition of the AASHTO "Standard Specifications for Highway Bridges".

1.7.2 Rail Retrofit on PPC Deck Beams

When a reinforced concrete overlay is placed on a PPC Deck Beam superstructure, the existing bridge rail is often replaced to conform with current bridge rail geometric and structural requirements. A new bridge rail, conforming with current design policies, can be attached to an overlayed PPC Deck Beam superstructure as shown in Figure 1.7.2-1 or Figure 1.7.2-2.

1.7.3 Rail Replacement on Trusses

Attaching a new bridge rail to an existing truss is often done to eliminate an existing damaged or structurally deficient bridge rail. Whenever possible, the post spacing of the new bridge rail should be adjusted to avoid attaching the new rail posts to the truss members. General details of the procedure are shown in Figure 1.7.3-1 and Figure 1.7.3-2.

1.7.4 Concrete Parapet Extensions

Existing concrete parapets are often reconstructed to meet current design requirements or to eliminate existing aluminum rail elements. This usually involves the removal of existing aluminum rail sections from the top of an existing parapet and the addition of a section of concrete parapet to the top of the existing parapet. The section of parapet added can be cast-in-place or precast as shown in Figure 1.7.4-1 and Figure 1.7.4-2 respectively.

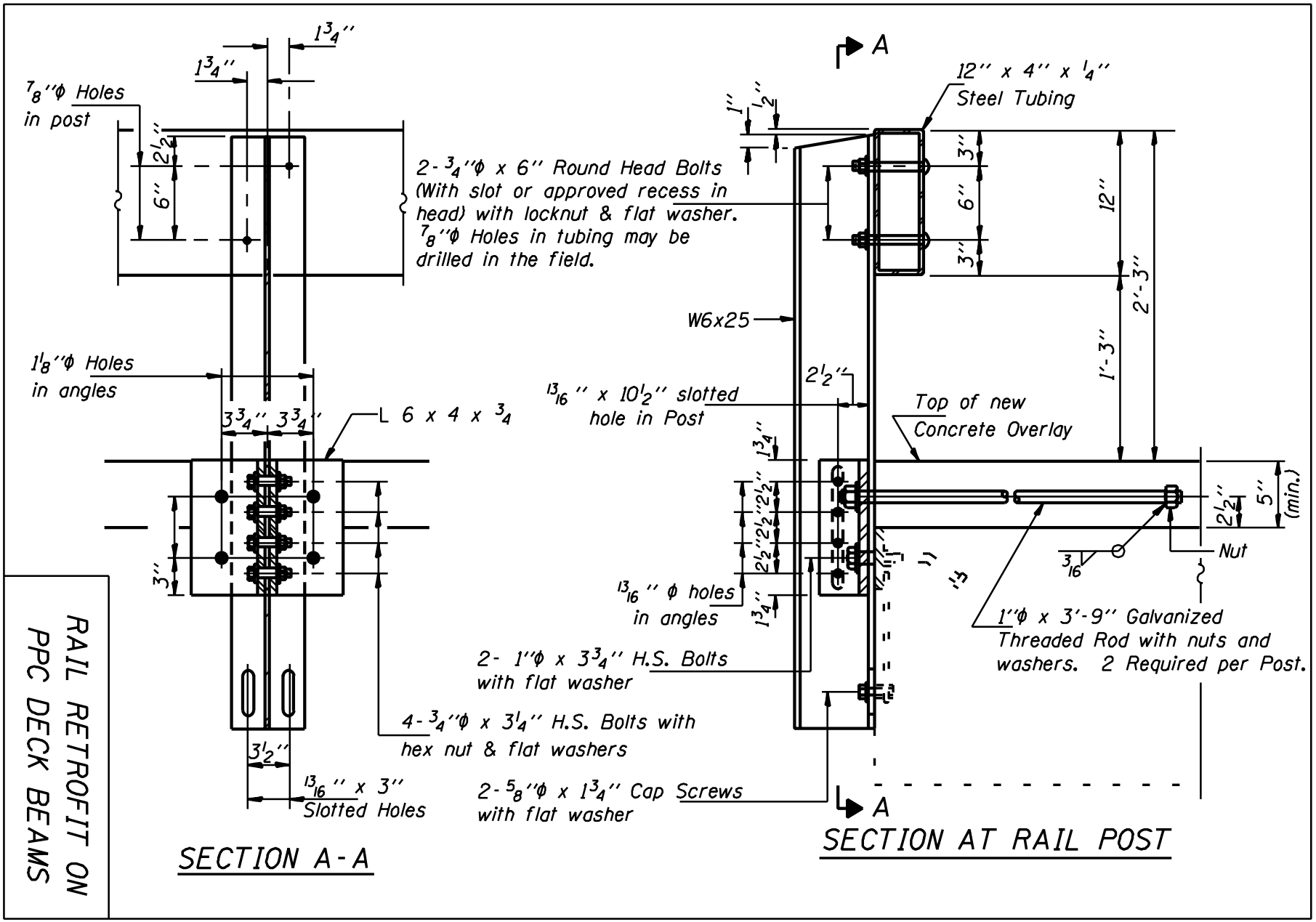

RAIL RETROFIT ON PPC DECK BEAMS

Figure 1.7.2-1

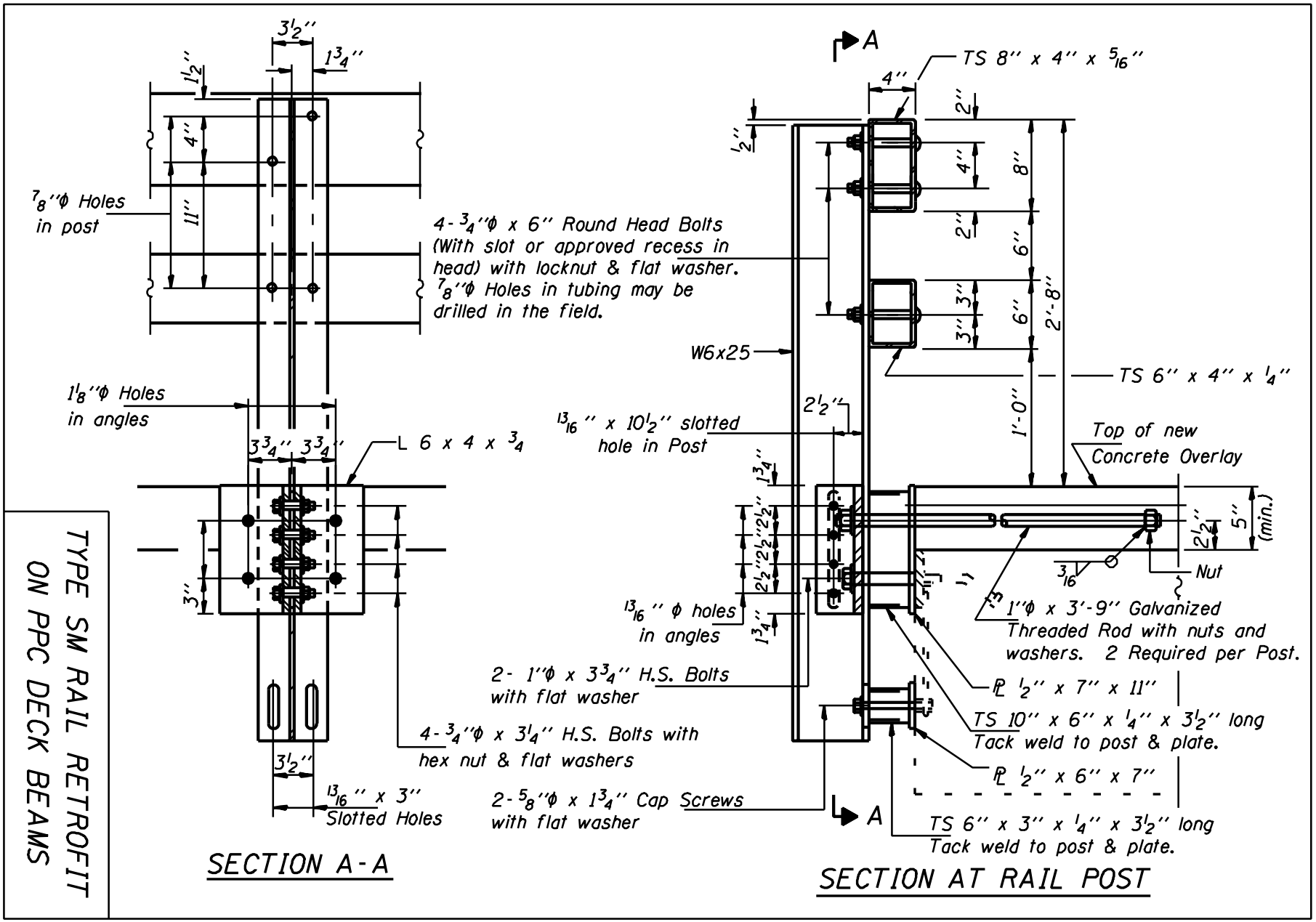

Figure 1.7.2-2

TYPE SM RAIL RETROFIT ON PPC DECK BEAMS

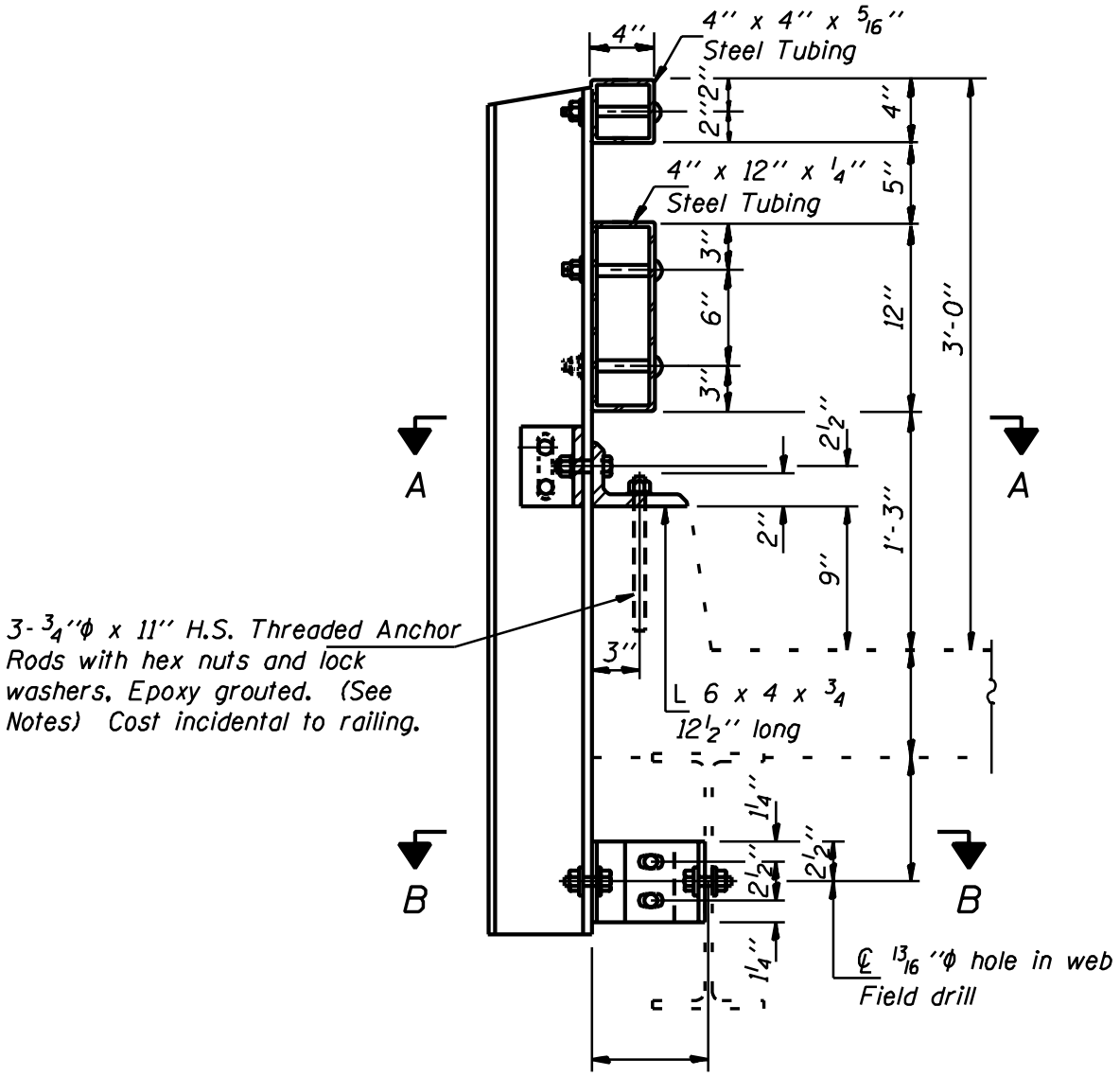

SECTION AT RAIL POST

Notes: For Section A-A and B-B see Figure 1.7.3-2.

The Contractor shall use the capsule or the adhesive cartridge type anchor rods that have been previously tested and given a prior approval by the Department. The Contractor shall install these anchor rods in pre-drilled holes in accordance with the manufacturer's recommendations and procedures.

The capsule or the adhesive cartridge shall be a sealed glass capsule or a sealed glass adhesive cartridge containing premeasured amounts of the adhesive chemical.

Nuts for 3/4''ϕ threaded anchor rods connecting the angle to the concrete shall be tightened to a snug fit and given an additional 1/8 turn.

TRUSS RAIL REPLACEMENT

Figure 1.7.3-1

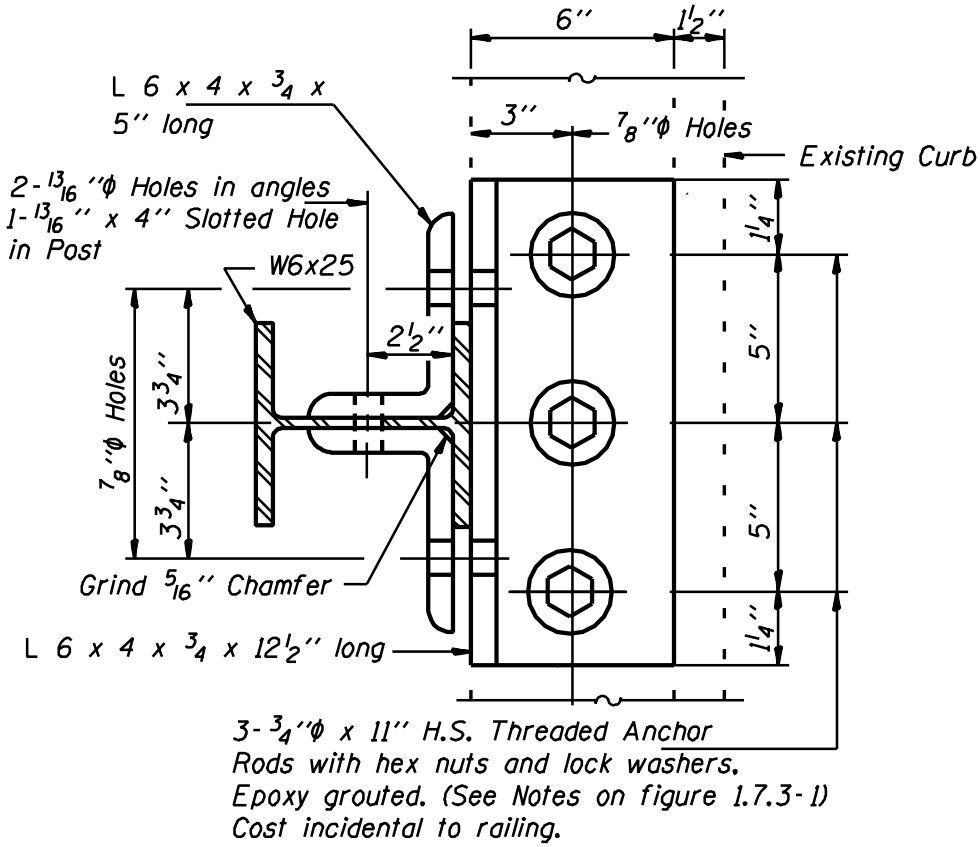

SECTION A-A

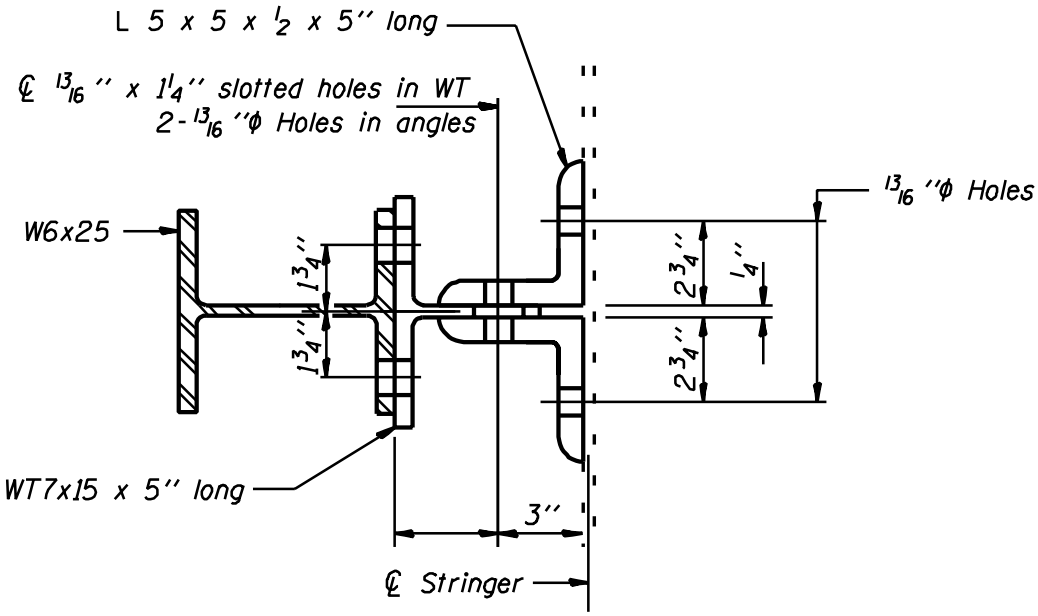

SECTION B-B

TRUSS RAIL REPLACEMENT

Figure 1.7.3-2

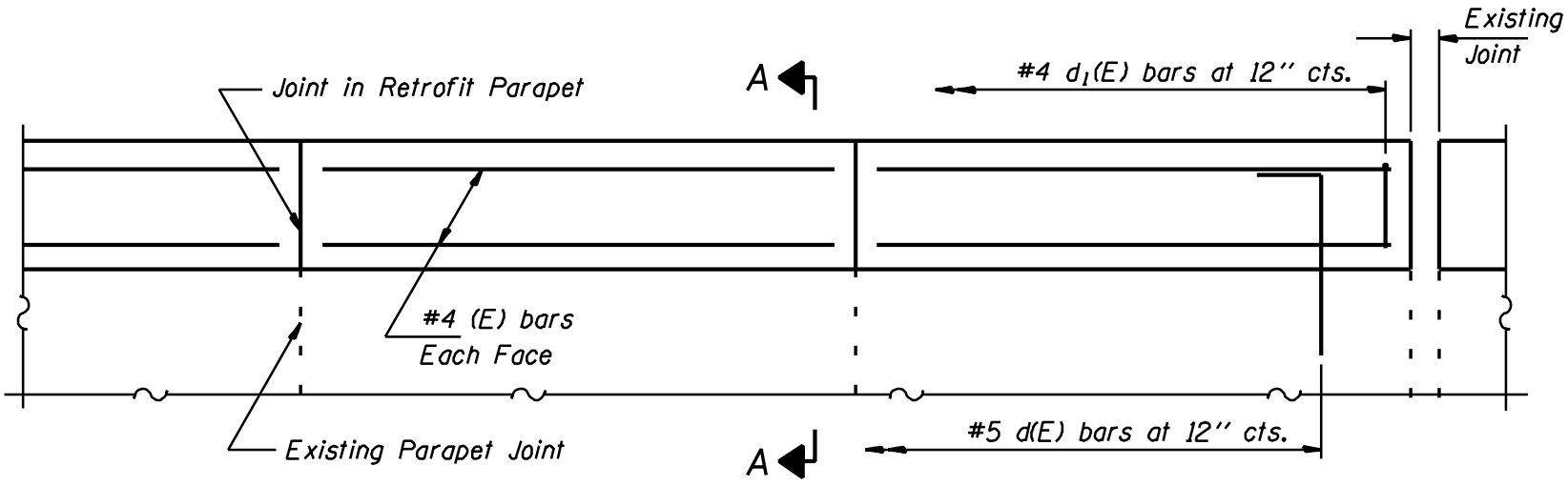

INSIDE ELEVATION OF PARAPET

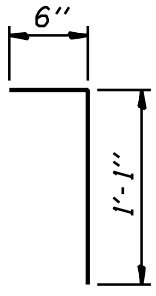

BAR d(E)

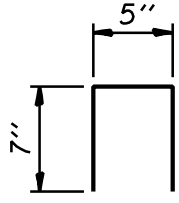

BAR d_1(E)

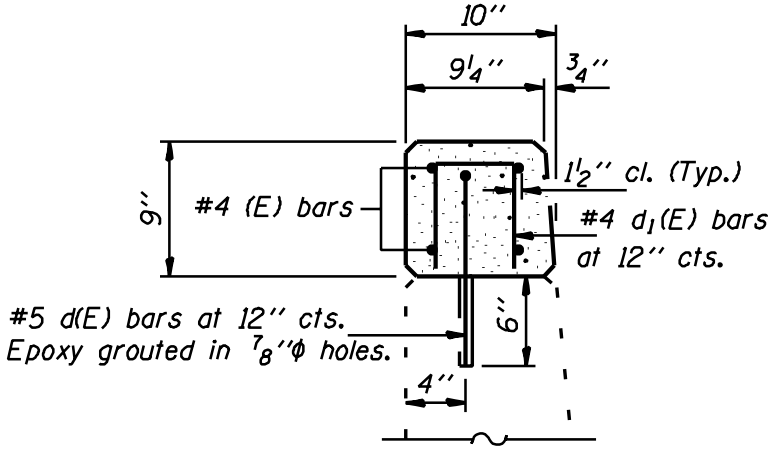

SECTION A-A

CONCRETE PARAPET
EXTENSION (CAST IN PLACE)

Figure 1.7.4-1

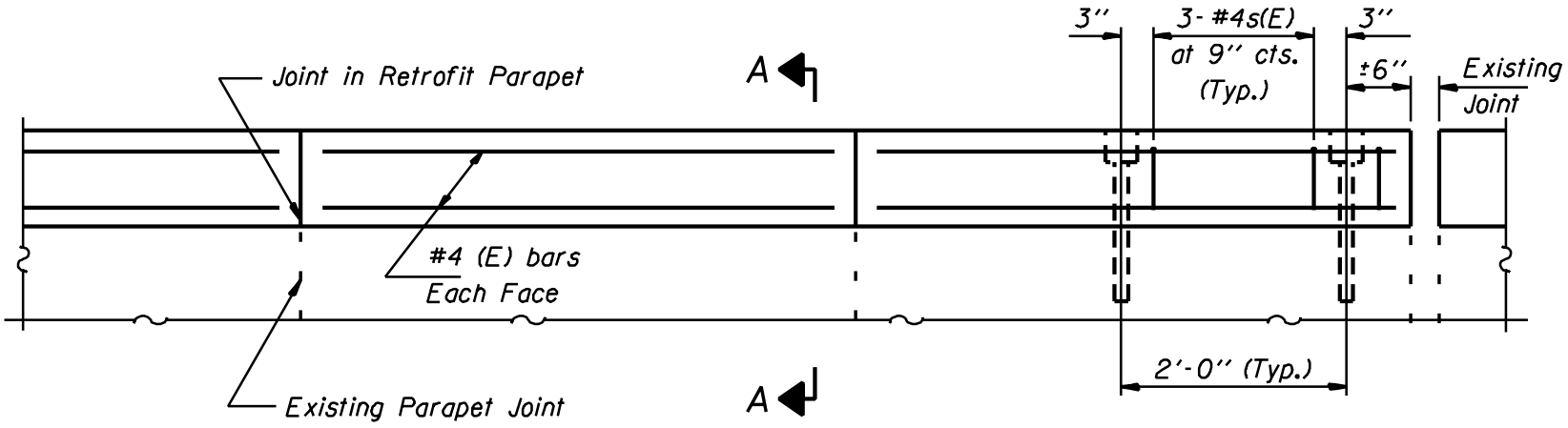

INSIDE ELEVATION OF PARAPET

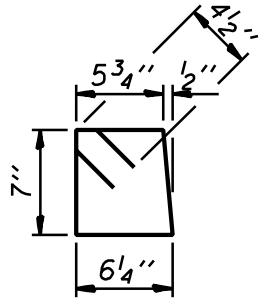

BAR s(E)

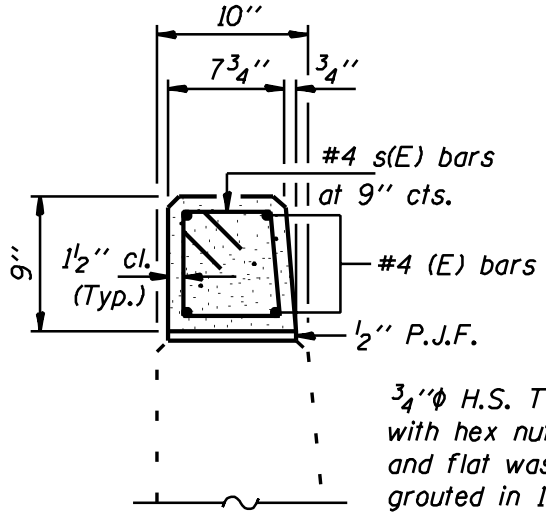

SHOWING REINFORCEMENT

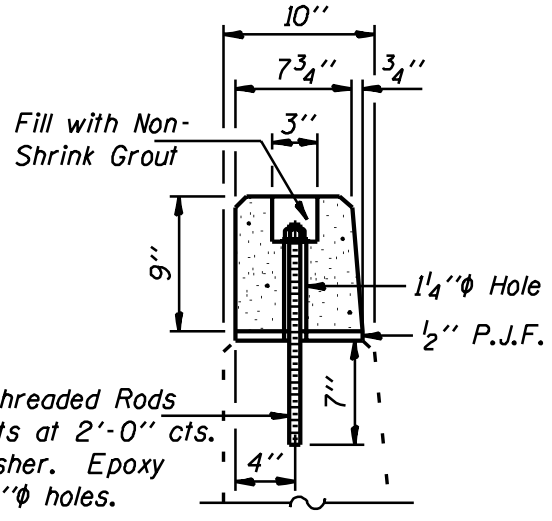

SHOWING ATTACHMENT

SECTION A-A

CONCRETE PARAPET
EXTENSION (PRECAST)

Figure 1.7.4-2

1.7.5 Parapet Repairs

When repairing a section of parapet damaged by a vehicle impact or natural deterioration, the following procedures should be used:

1. Extend the concrete removal for the repair to an existing parapet joint whenever possible or saw cut the perimeter of the damaged area 3/4 inch deep.
2. Salvage, clean and incorporate all existing vertical reinforcement bars into the new construction.
3. Remove and replace all existing horizontal reinforcement bars in the area of concrete removal when a significant length of the bars have been exposed and there is a probability that the bars will be damaged during the concrete removal operations.
4. Except at existing parapet joints, new horizontal reinforcement bars should be lapped with existing horizontal reinforcement bars sufficiently to develop the strength of the bar and bonded construction joints should be specified for the contact area between the new concrete and the existing parapet.
5. Existing parapet joint spacing and features should be utilized in the repair.

See Figure 1.7.5-1 for parapet repair details.

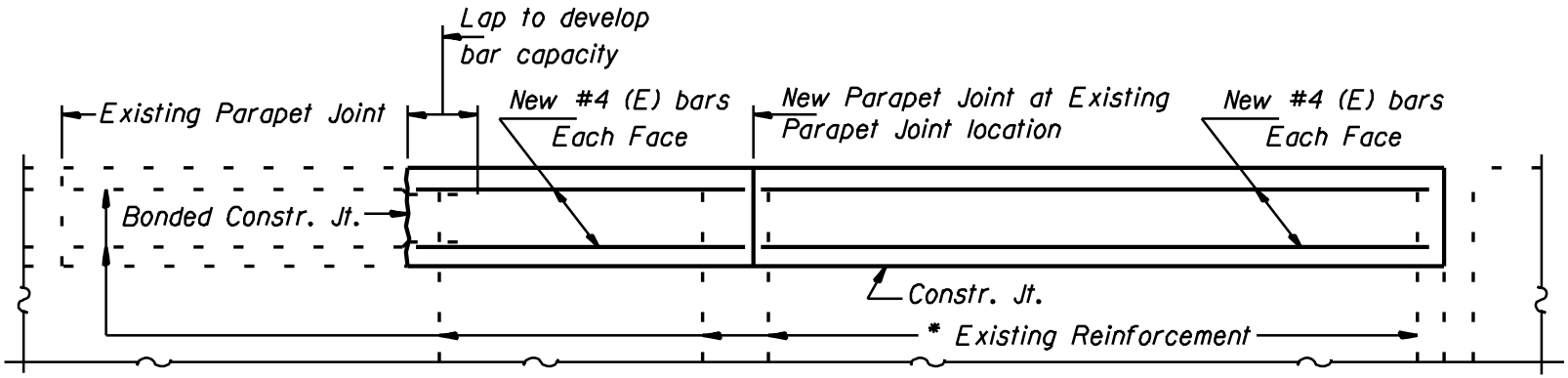

INSIDE ELEVATION OF PARAPET

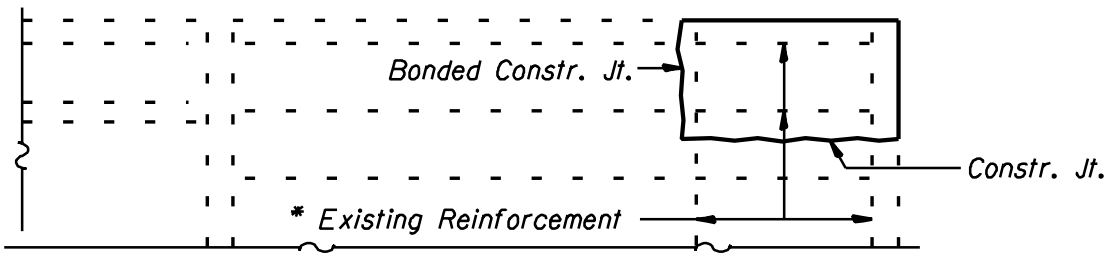

INSIDE ELEVATION OF WING WALL

Note: Reinforcement extending into removed area shall be cleaned, straightened and incorporated into the new construction.

PARAPET AND WING WALL
REPAIR DETAILS

Figure 1.7.5-1

1.8 Deck Drains

1.8.1 General

Many existing structures were constructed with deck drains which direct drainage onto the main load carrying members of the superstructure or onto the substructure units. Also, the number of deck drains present on many existing structures greatly exceeds the number of drains necessary to adequately control the ponding of water on the deck surface. Repair plans for major maintenance projects on the deck surface of a structure, such as overlay projects, should contain details to provide for the adjustment or elimination of existing deck drains. Also, when the low point of a vertical sag curve is located on the structure and there is no existing drainage scupper at the low point, major deck maintenance projects should provide for the installation of a drainage scupper.

1.8.2 Drain Extensions

When existing deck drains are to remain in place, adjustments must be made to prevent the discharge of deck drainage onto the superstructure. Existing aluminum drains may be extended using bent aluminum sheets as shown in Figure 1.8.2-1 or an aluminum extrusion as shown in Figure 1.8.2-2.

When the existing drain consists of a formed opening in the concrete deck, an aluminum drain can be fabricated and attached to the existing deck and beam as shown in Figure 1.8.2-3. When the existing aluminum drain extends horizontally through the curb, as is often the case on PPC deck beam superstructures, the details shown in Figure 1.8.2-4 may be utilized to prevent drainage onto the side of the fascia beam.

Deck drains should always be extended to a point at least 3 inches below the bottom of the beam or girder. Drain extensions on bridges where the extensions will be directly visible to the traveling public should be painted to match the color of the fascia beam or girder. The method of painting should be as described for deck drains in the Prestressed Concrete Manual and the Design Section of the Bridge Manual.

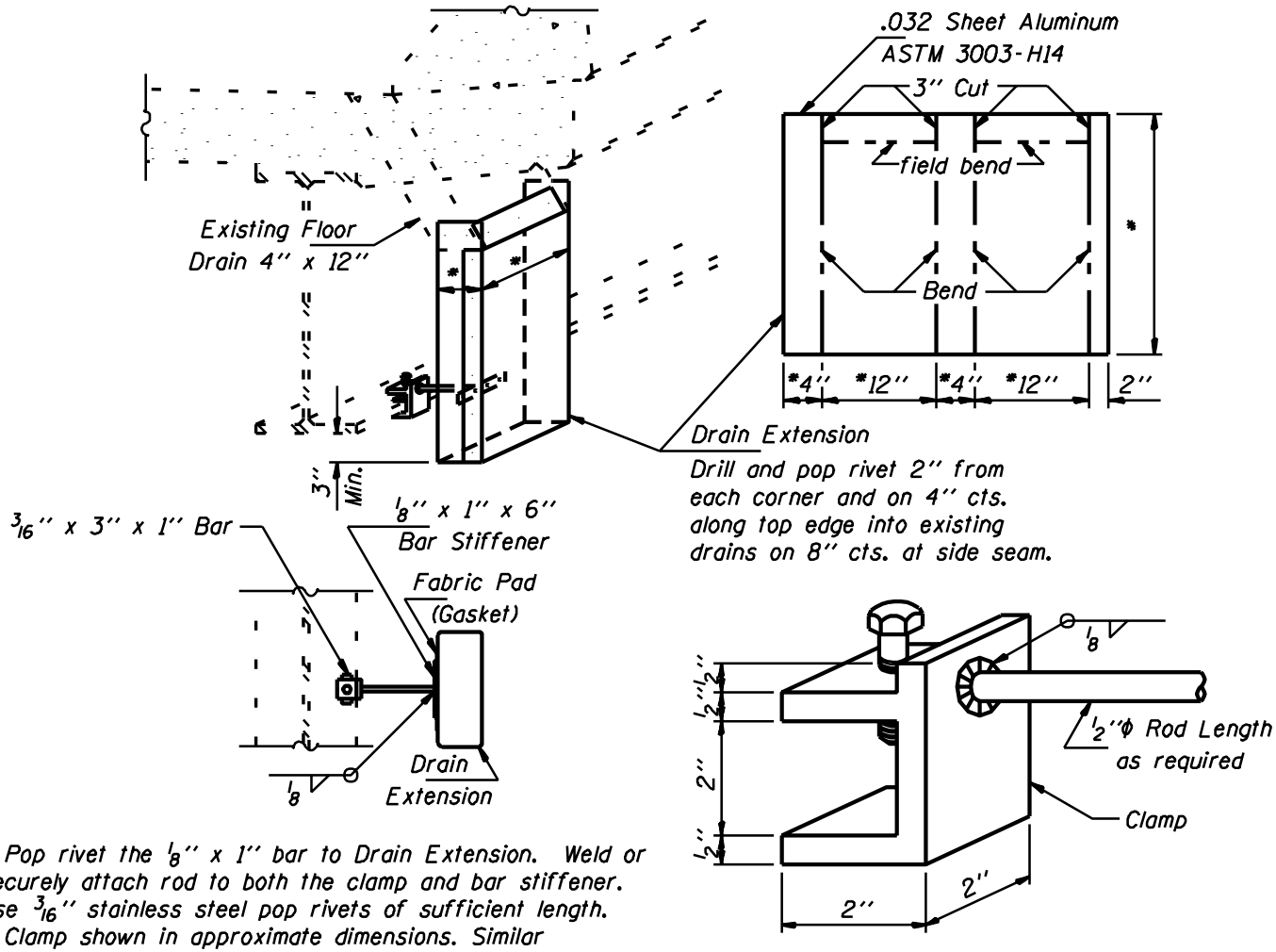

Notes: Pop rivet the 1/8'' x 1'' bar to Drain Extension. Weld or securely attach rod to both the clamp and bar stiffener. Use 3/16'' stainless steel pop rivets of sufficient length.

Clamp shown in approximate dimensions. Similar commerically available may be substituted.

* Field measure cut to fit existing drain.

An aluminum extrusion drain extension of similar dimensions may be substituted.

STEEL CLAMP

DRAIN EXTENSION DETAIL

Figure 1.8.2-1

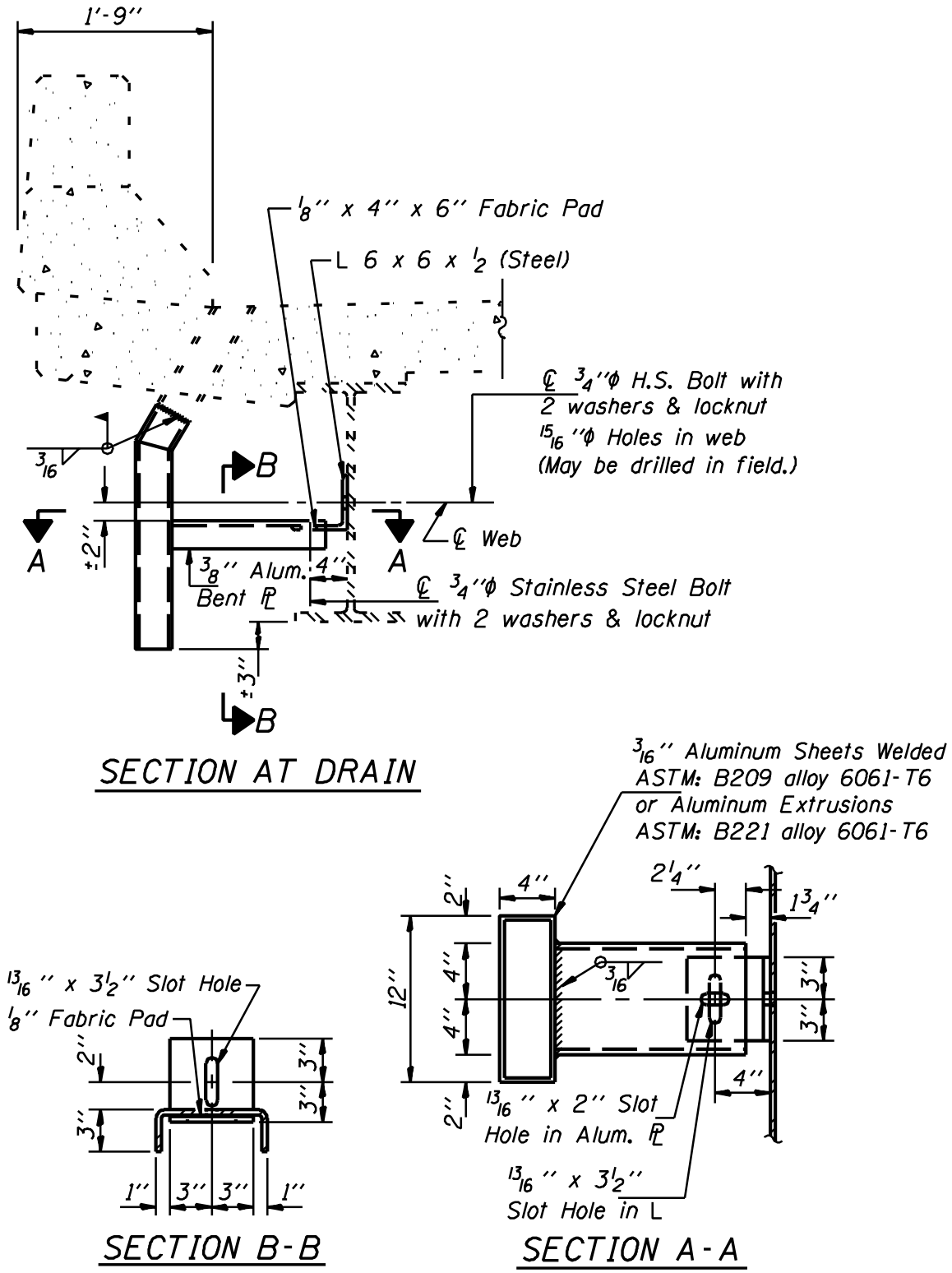

DRAIN EXTENSION DETAIL

Figure 1.8.2-2

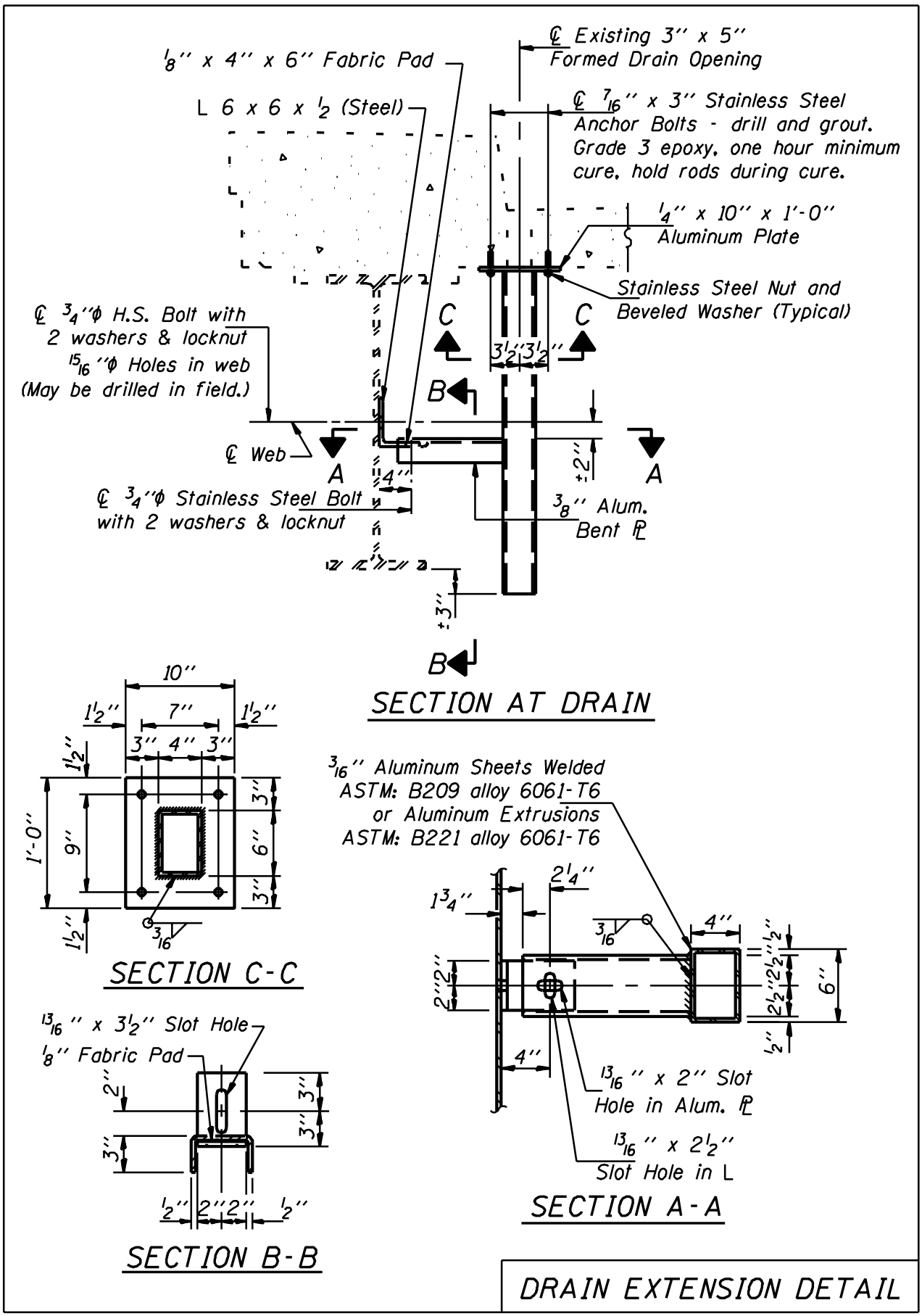
1/8'' x 4'' x 6'' Fabric Pad
L 6 x 6 x 1/2 (Steel)
℄ Existing 3'' x 5'' Formed Drain Opening
℄ 7/16'' x 3'' Stainless Steel Anchor Bolts - drill and grout. Grade 3 epoxy, one hour minimum cure, hold rods during cure.
1/4'' x 10'' x 1'-0'' Aluminum Plate
Stainless Steel Nut and Beveled Washer (Typical)
℄ 3/4''ϕ H.S. Bolt with 2 washers & locknut
15/16''ϕ Holes in web (May be drilled in field.)
℄ Web
℄ 3/4''ϕ Stainless Steel Bolt with 2 washers & locknut
3/8'' Alum. Bent PL
3 1/2'' 3 1/2''
±2''
±4''
±3''
A
B
C
SECTION AT DRAIN
10''
1 1/2''
7''
3'' 4'' 3''
1'-0''
9''
6''
3/16
SECTION C-C
3/16'' Aluminum Sheets Welded ASTM: B209 alloy 6061-T6 or Aluminum Extrusions ASTM: B221 alloy 6061-T6
1 3/4''
2 1/4''
4''
2 1/2''
13/16'' x 2'' Slot Hole in Alum. PL
13/16'' x 2 1/2'' Slot Hole in L
SECTION A-A
13/16'' x 3 1/2'' Slot Hole
1/8'' Fabric Pad
2''
3''
1/2'' 2'' 2'' 1/2''
SECTION B-B
DRAIN EXTENSION DETAIL

Figure 1.8.2-3

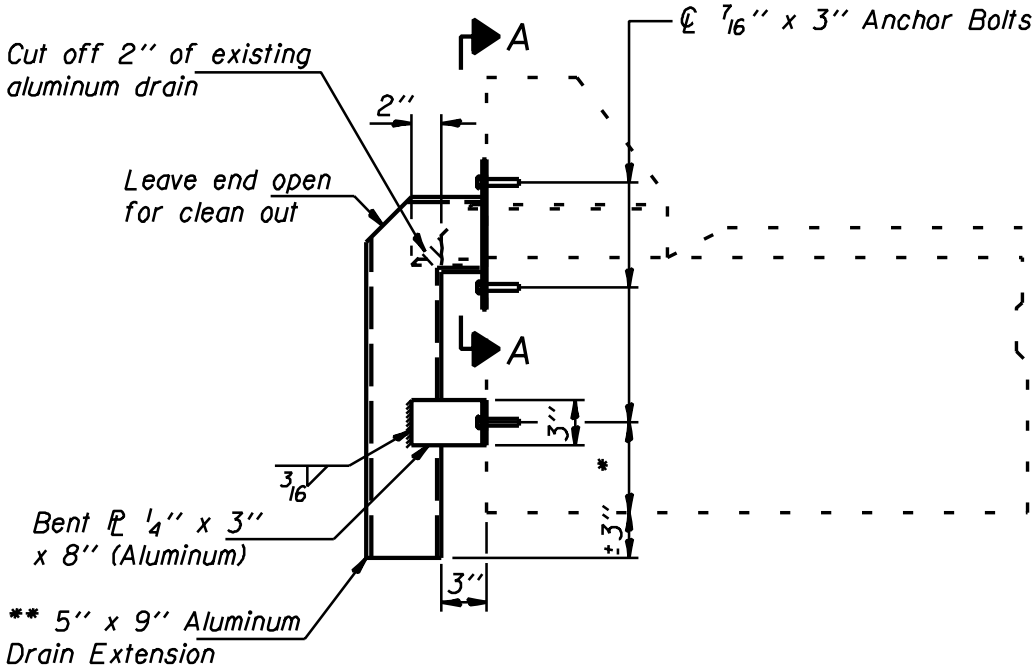

SECTION AT DRAIN

* Designer locate to miss existing prestressing strands.
** 3/16'' Aluminum Sheets (Welded) ASTM: B209 alloy 6061-T6.

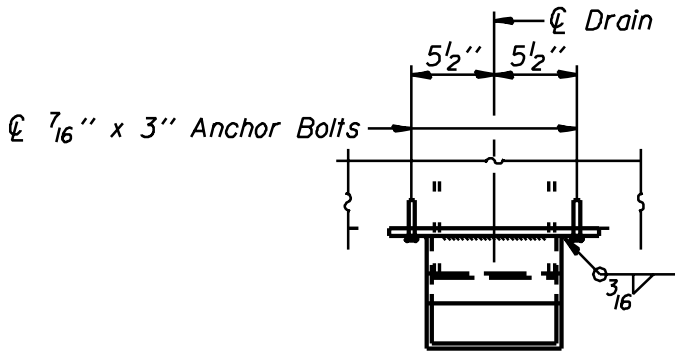

TOP PLAN

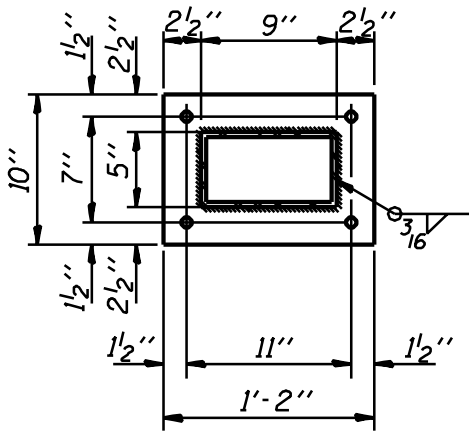

SECTION A-A

PL 1/4'' x 10'' x 1'-2'' (Aluminum)

DRAIN EXTENSION DETAIL

Figure 1.8.2-4

1.8.3 Drain Elimination

Many existing structures were constructed with deck drains at 6 foot centers. The number of drains on these structures greatly exceeds the number of drains required to prevent ponding on the deck. When this situation is encountered, alternate drains may be eliminated to provide a 12 foot drain spacing. Also, existing deck drains located within 10 feet of a substructure unit should be eliminated.

Existing aluminum deck drains, which extend below the deck, can be eliminated by installing a threaded rod through the bottom of the drain and plugging the drain with concrete as shown in Figure 1.8.3-1. Existing drains consisting of a vertical formed opening in the deck slab should be eliminated by removing and replacing a 1 foot by 2 foot area of the deck as shown in Figure 1.8.3-2. Formed drain openings extending diagonally through the deck may be eliminated by coating the interior surface of the opening with a bonding agent and plugging the opening with concrete as illustrated in Figure 1.8.3-3.

The deck concrete adjacent to deck drains is often in an advanced state of deterioration relative to other areas of the deck slab. The condition of the concrete surrounding the drain should be considered when determining if a drain should be eliminated by plugging the existing drain opening or removing and replacing an area of the deck.

1.8.4 Drain Replacement

Rather than extending an existing deck drain, a drain may be completely replaced using the details shown in the Design Section of the Bridge Manual. Installing a new drain will include the removal and replacement of any poor quality concrete in the area of the existing drain. Also, the replacement drain may be of a type which requires less maintenance or is more easily replaced when damaged or stolen.

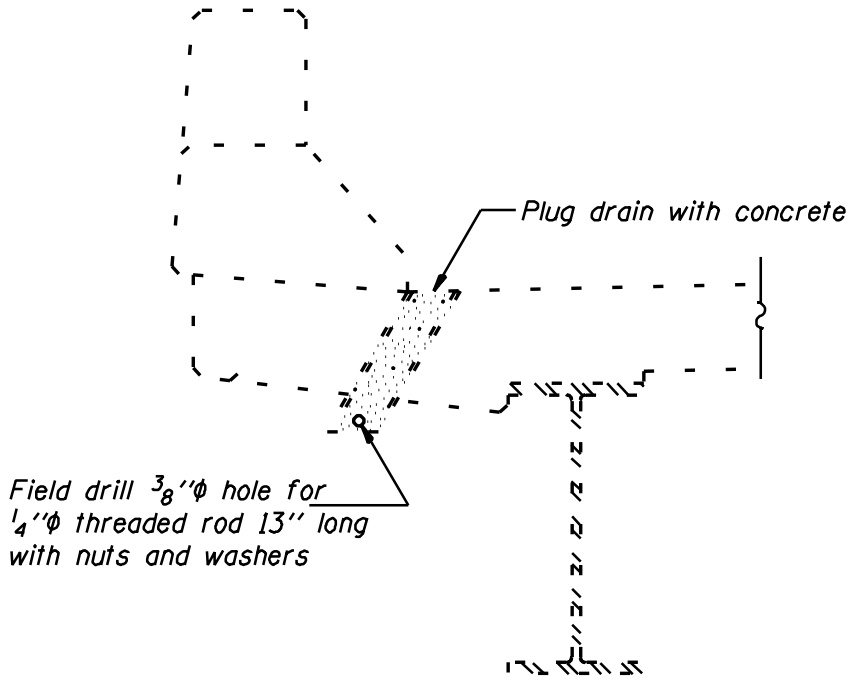

SECTION AT DRAIN

DRAIN ELIMINATION DETAIL

Figure 1.8.3-1

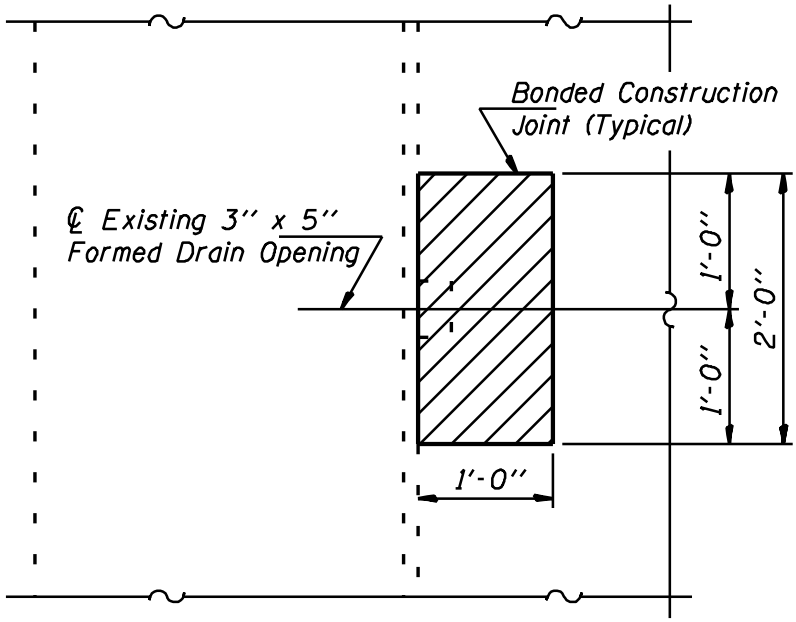

PARTIAL PLAN

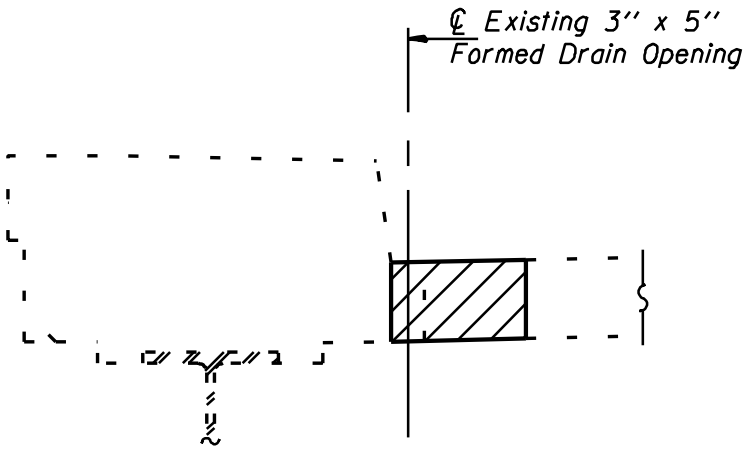

SECTION AT DRAIN

Hatched areas indicate concrete sections to be removed and replaced. Perimeters of concrete removal areas shall be saw cut $^{3}/_{4}$'' prior to the removal of concrete.

DRAIN ELIMINATION DETAIL

Figure 1.8.3-2

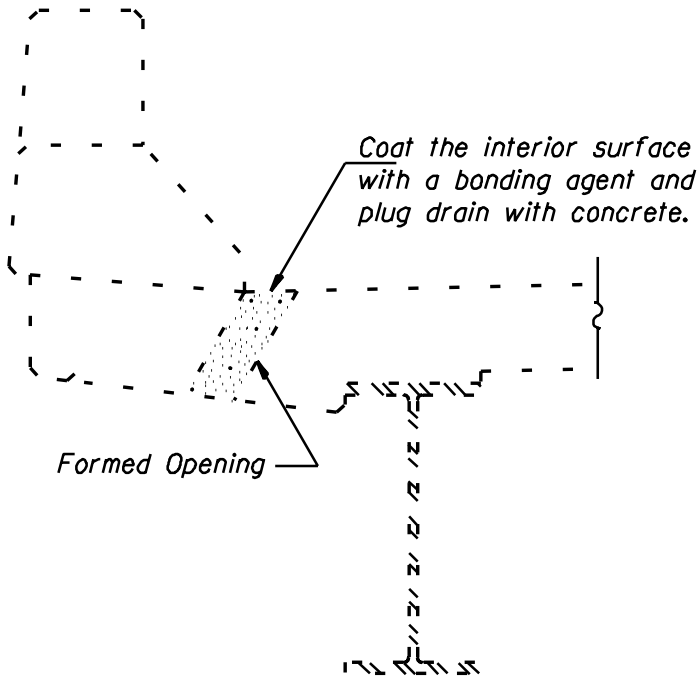

SECTION AT DRAIN

DRAIN ELIMINATION DETAIL

Figure 1.8.3-3

1.9 Bearing Replacements

1.9.1 Bearing Type Selection

When existing bearings must be replaced, the replacement bearing assemblies shall be designed as specified in the Design Section of the Bridge Manual. Elastomeric bearings should be used when replacing existing expansion bearings except where specific design requirements necessitate the use of an alternate type of bearing. Steel rocker or roller bearings should be used as replacement bearings only when a limited number of bearings are to be replaced on a specific structure and the replacement bearings need to match the behavior of the existing bearings which are to remain in place.

1.9.2 Seismic Requirements

Seismic requirements, including substructure seat width and superstructure restraint, need not be considered for maintenance contracts and Day Labor awards. However, seismic requirements should be considered as specified in the Bridge Manual for structures being rehabilitated or replaced.

1.9.3 Existing Bearing Removal

When removing an existing bearing assembly, the steel plate welded to the bottom flange of an existing beam or girder should be removed. The method of removal used should not damage the bottom flange and should provide for the removal of all existing weld material from the bottom flange. Figure 1.9.3-1 shows details associated with the removal of an existing bearing assembly.

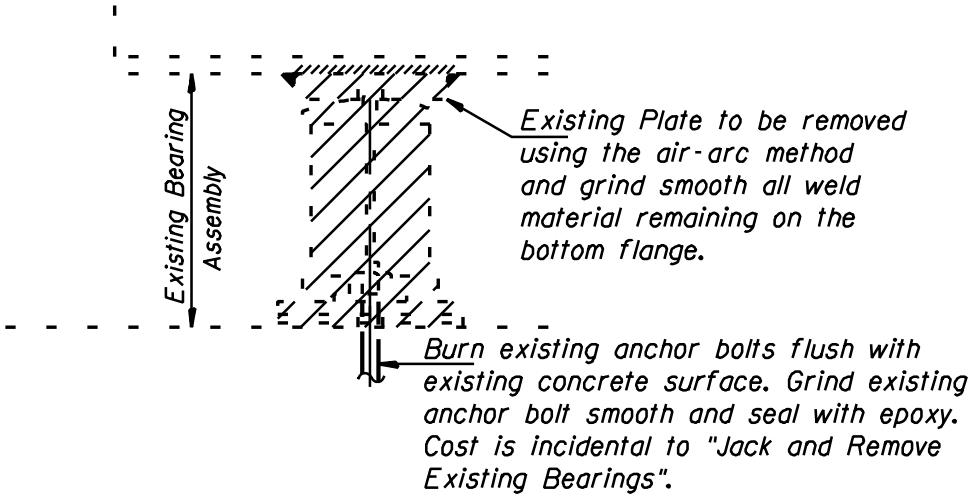

EXISTING BEARING REMOVAL DETAIL

Notes: Anchor Bolts for new bearing assembly or side retainers should be located such that the distance from the center of existing anchor bolt to center of proposed anchor bolt is not less than "S" as determined by the equation shown below.

D_1 = Existing bolt diameter.
D_2 = New bolt diameter.

$$S = \left(\frac{D_1 + D_2}{2}\right) + 1\tfrac{1}{4}''$$

EXISTING STEEL ROCKER BEARING REMOVAL

Figure 1.9.3-1

1.9.4 Bearing Height Adjustment

When elastomeric bearings are used to replace existing steel bearings, there is routinely a difference in the height of the existing bearing assembly versus the height of the new elastomeric bearing assembly. Differences in bearing assembly height require the addition of a steel extension to the elastomeric bearing assembly or the reconstruction of the substructure bearing seat. These adjustments are necessary to maintain the current profile grade elevations of the superstructure or to adjust the elevation of the superstructure to meet a new profile grade.

The decision to use either a steel extension or a reconstructed bearing seat will depend on the difference between the existing and proposed bearing assembly heights. Generally, steel extensions should be used to adjust the height of the elastomeric bearing assembly for extensions less than or equal to 12 inches in height. When the height of the extension is less than 6 inches, the extension should consist of steel shim plates placed between the elastomeric bearing assembly and the superstructure as shown in Figure 1.9.4-1. When the required height of the extension is greater than or equal to 6 inches and less than 12 inches, an extension should be fabricated using 1 inch plates as shown in Figure 1.9.4-2. When 12 inches or more of bearing assembly height adjustment is required, the bearing seat area of the abutment or pier should be reconstructed to provide the proper elevation for the new elastomeric bearing assemblies. Figure 1.9.4-3 illustrates an acceptable method of constructing a new concrete seat for a replacement bearing assembly.

The guidelines for choosing extension types should be used with some flexibility. Although a concrete extension is preferred for extension heights of 12 inches or more, situations will occur when a fabricated steel extension may be used with a height of 12 inches or greater in order to minimize construction time and traffic disruptions. Also, fabricated steel extensions may be used for a height less than 6 inches when it is physically possible to fabricate and install the steel extension.

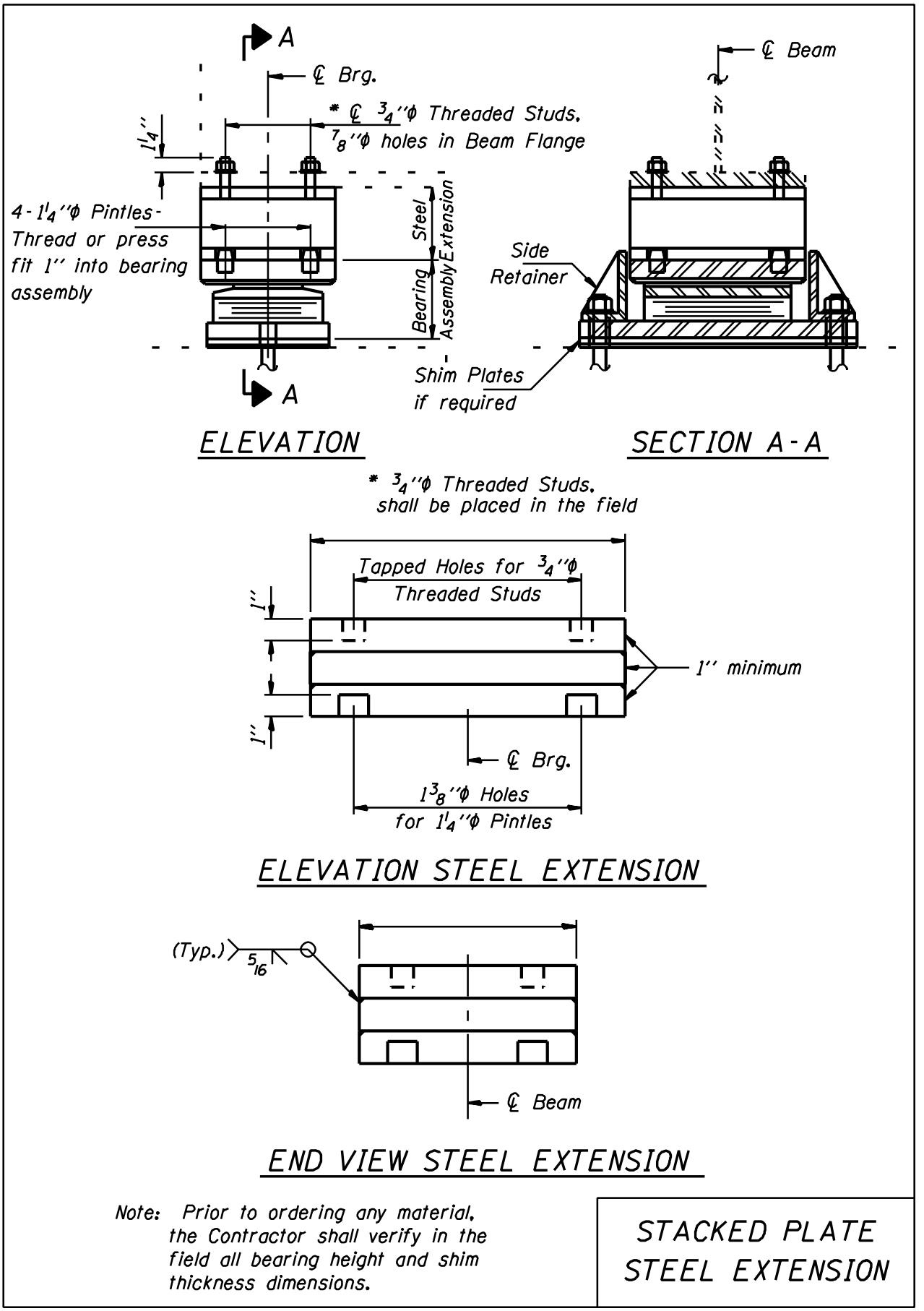

Note: Prior to ordering any material, the Contractor shall verify in the field all bearing height and shim thickness dimensions.

STACKED PLATE STEEL EXTENSION

Figure 1.9.4-1

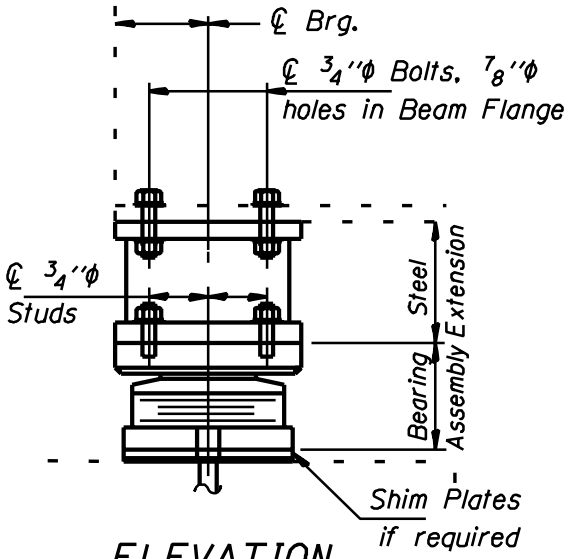

ELEVATION

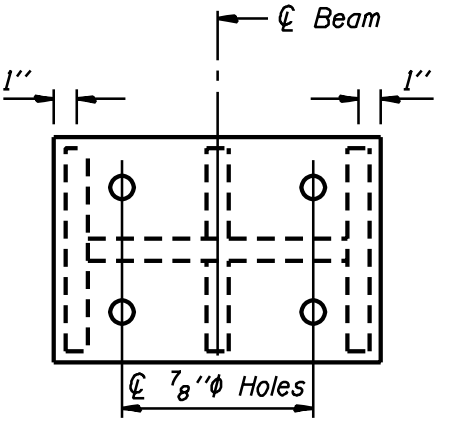

PLAN STEEL EXTENSION

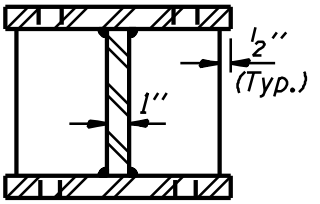

SECTION A-A

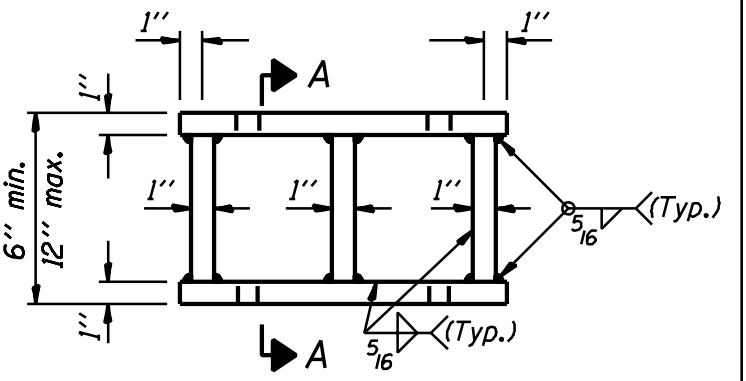

ELEVATION STEEL EXTENSION

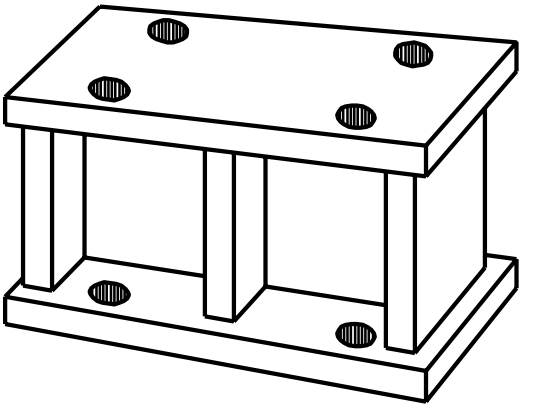

Note: Prior to ordering any material, the Contractor shall verify in the field all bearing height and shim thickness dimensions.

FABRICATED STEEL EXTENSION

Figure 1.9.4-2

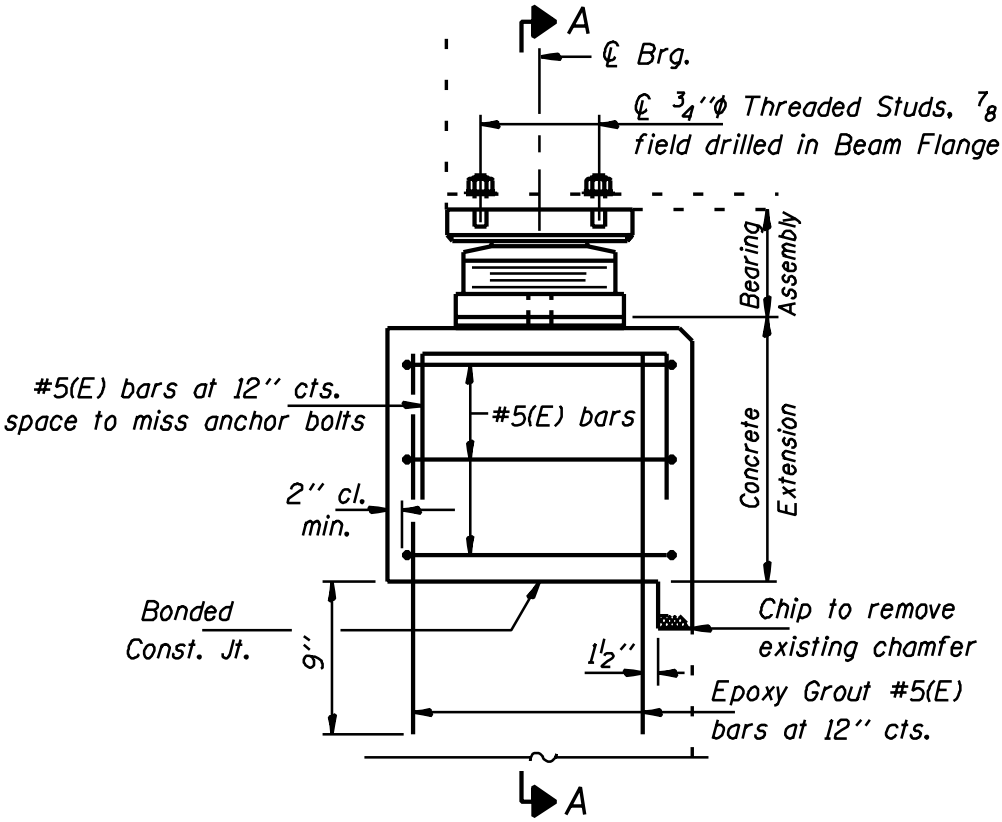

ELEVATION

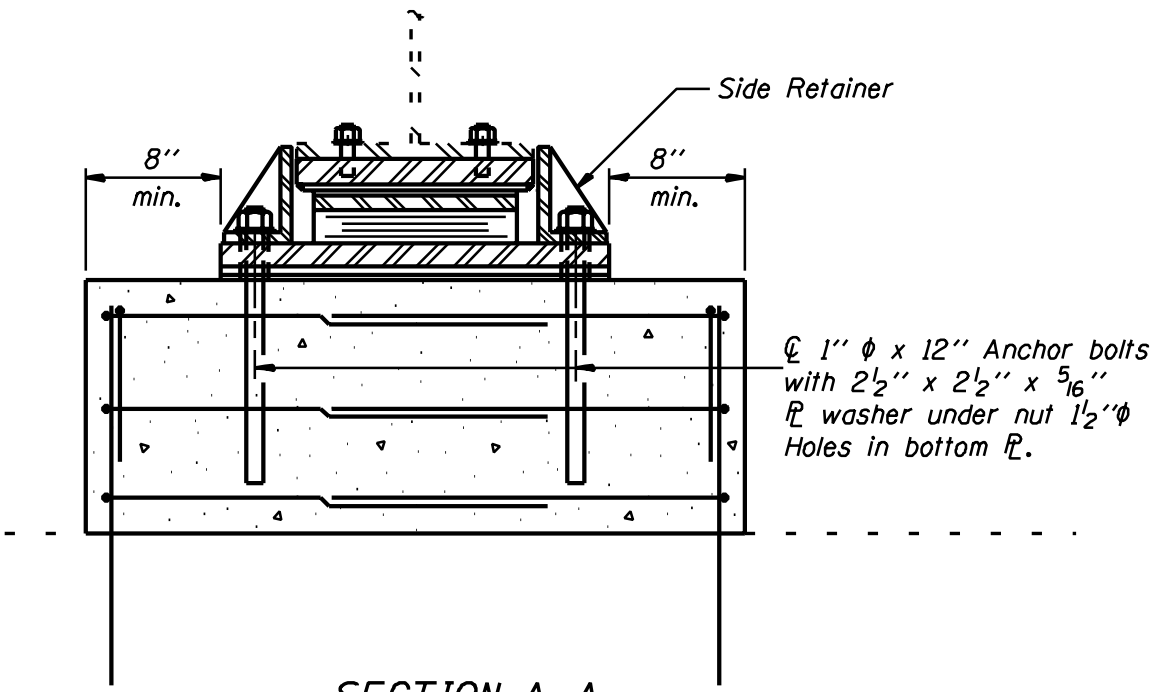

SECTION A-A

Note: Prior to ordering any material, the Contractor shall verify in the field all bearing height and shim thickness dimensions.

CONCRETE EXTENSION

Figure 1.9.4-3

1.9.5 Reinforced Concrete Slab Bearings

When replacing the bearings under a reinforced concrete slab bridge, preferably the end of the deck should be removed and replaced as described for expansion joint replacement elsewhere in the Repair Section. Although this method, as shown in Figure 1.9.5-1, will require the slab to be temporarily supported and the employment of stage construction during construction, it will insure that the new bearings are uniformly loaded.

Bearings may also be replaced under a reinforced concrete slab bridge without completely removing the end of the deck, as shown in Figure 1.9.5-2. However, this method requires that accurate field measurements of the existing bearing heights be taken to insure that the replacement bearings are detailed and fabricated to match the heights of the existing bearings. Heights can vary from one existing bearing to the next and failure to match existing bearing assembly heights can result in the replacement bearings being unequally loaded. This method of bearing replacement also requires the new bearing assemblies to be field welded to the existing steel bearing plates usually found embedded in the bottom of the slab. The limited space available between the bottom of the slab and the bearing seat and the condition of the existing plate should be considered to determine if field welding operations can be adequately performed.

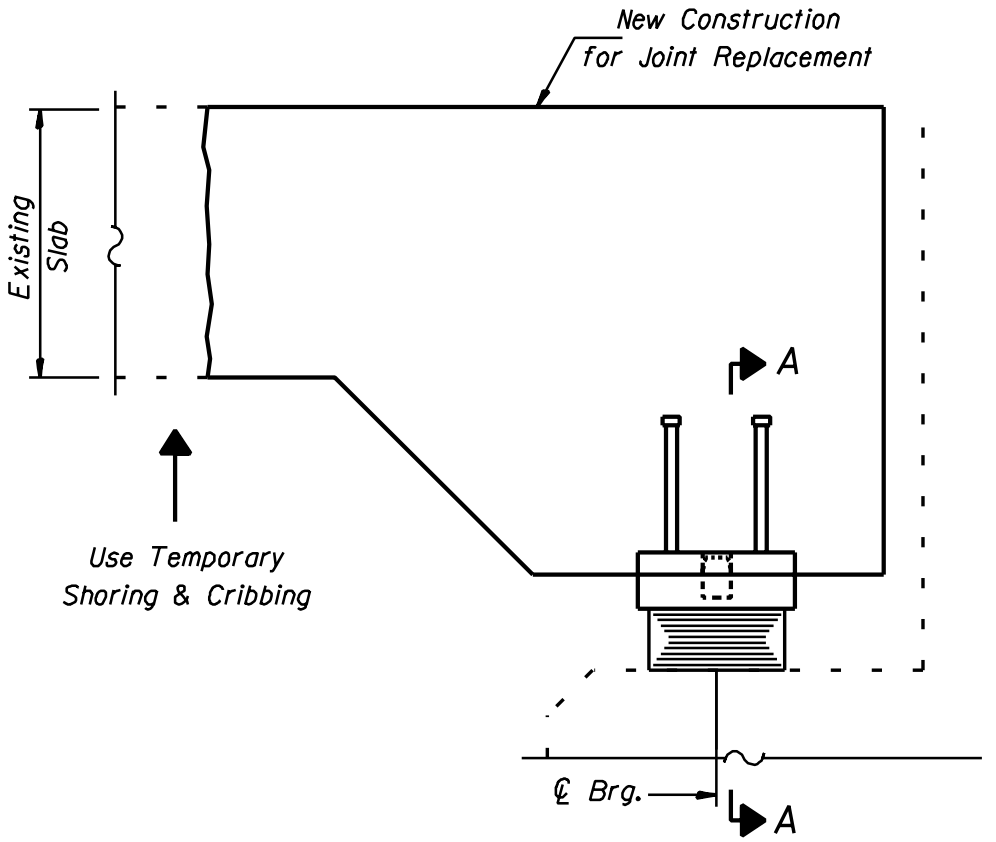

ELEVATION AT ABUTMENT

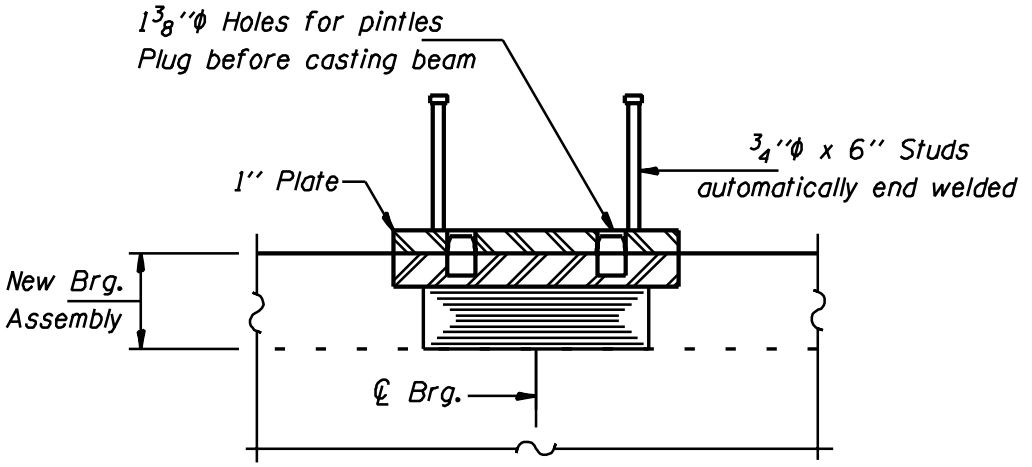

SECTION A-A

BEARING REPLACEMENT
FOR R. C. SLABS
WITH JOINT REPLACEMENT

Figure 1.9.5-1

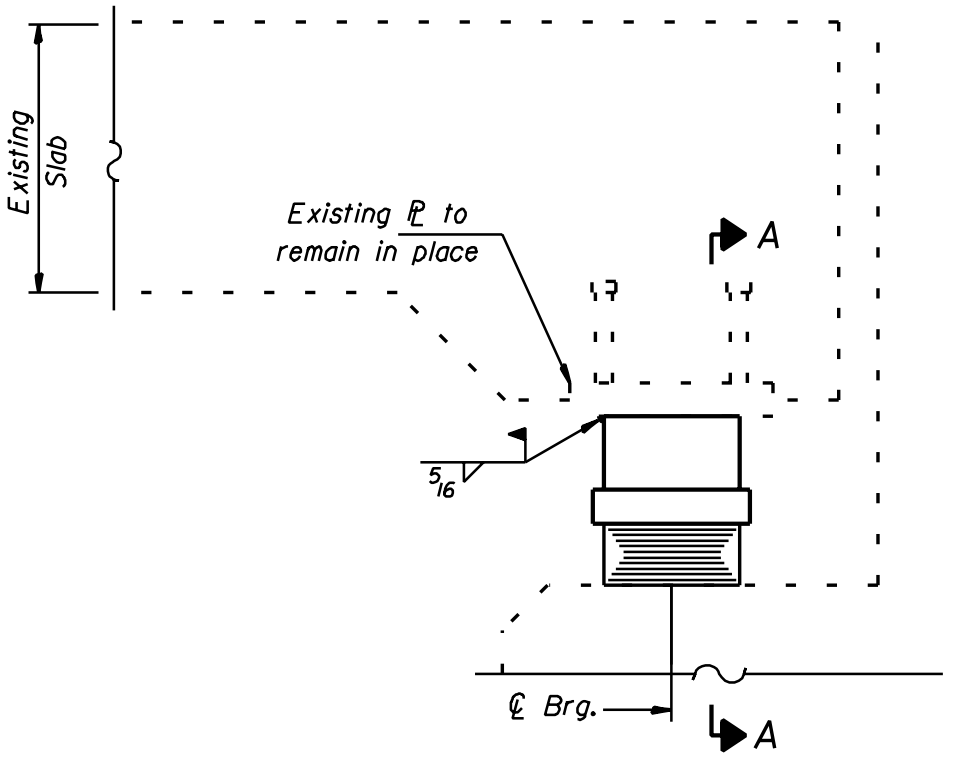

ELEVATION AT ABUTMENT

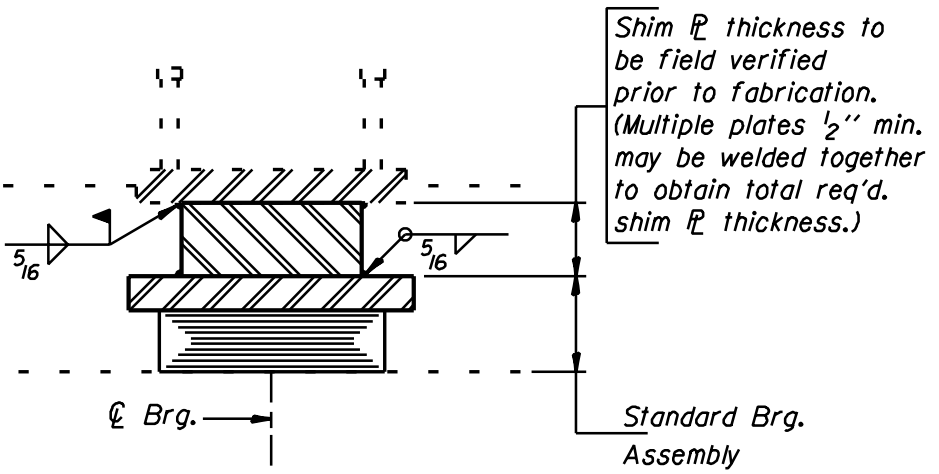

SECTION A-A

BEARING REPLACEMENT FOR EXISTING R. C. SLABS

Figure 1.9.5-2

1.9.6 Reaction Table

All plans for bearing replacements should contain a table showing the girder or beam reactions for each bearing replacement location (substructure unit). The table should include the Deadload, Liveload, Impact and Total reaction per beam line as shown in the Design Section of the Bridge Manual for an "Interior Girder/Beam Reaction Table". The Structural Services Section of the Bureau of Bridges and Structures will provide reaction tables when plans are prepared by District personnel.

1.9.7 Top Bearing Plate Adjustment

If a steel rocker expansion bearing is substantially tilted out of position with respect to its proper location for a given temperature, the top bearing plate needs to be adjusted. This consists of removing the top bearing plate by the air-arc method without damaging the bottom flange and grinding smooth all weld material remaining on the bottom flange. Then a new top bearing plate should be placed in the right position depending on the temperature at that time and welded to the bottom flange.

1.9.8 Anchor Bolts

If existing anchor bolts are deteriorated due to corrosion or broken, a new threaded extension rod can be welded on to the existing anchor bolt as shown in Figure 1.9.8-1. If new anchor bolts are needed, they shall be placed such that the distance between the center of the existing anchor bolt and the center of the new anchor bolt is as shown in Figure 1.9.3-1.

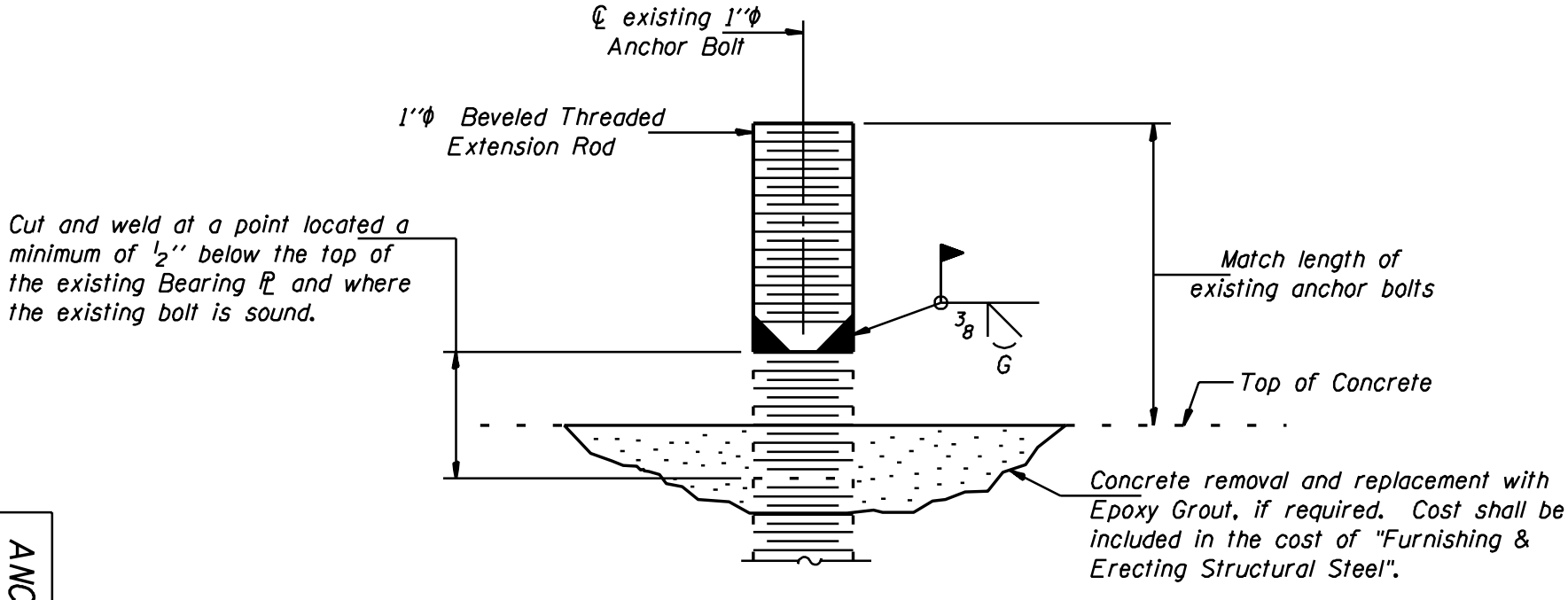

ANCHOR BOLT EXTENSION DETAIL

The furnishing and installation of required Anchor Bolt Extensions shall be included in the cost of "Furnishing and Erecting Structural Steel".

Figure 1.9.8-1

ANCHOR BOLT EXTENSION

1.10 Jacking and Cribbing

1.10.1 General

During bearing replacements or the repair of concrete immediately under bearings, the superstructure must be lifted and temporarily supported. This procedure is generally referred to as Jacking and Cribbing. Specific details for Jacking and Cribbing are not usually shown in the repair plans prepared for maintenance contracts or Day Labor awards. However, pay items and special provisions for jacking, cribbing and bearing removal should always be included in the repair plans. Specific details for the jacking and cribbing system to be used to implement the planned repairs will be developed by the contractor and submitted to the Bureau of Bridges and Structures for review and approval prior to beginning jacking operations. Design calculations should be included with the jacking and cribbing details submitted for review and approval.

1.10.2 Traffic Staging

The plans or special provisions should require that traffic be redirected during the jacking and cribbing operations so that vehicles will not be located directly over the cribbed areas. Traffic should not be allowed directly over cribbed areas of the superstructure unless there is no reasonable alternate method of routing vehicles and the jacking and cribbing plans contain details which will provide adequate horizontal and vertical stability for the superstructure. Vehicles must not be allowed to travel over uncribbed areas of the structure supported only by hydraulic jacks.

1.10.3 Jacking Synchronization

During the jacking and cribbing operations, the lifting of the structure should be controlled so that the relative elevation between adjacent beams does not vary more than 1/8 inch from their original elevation differential. Also, the relative elevations of a continuous beam at adjacent substructure units should not vary more than 1/4 inch from the original relative elevations. If the entire superstructure is being raised a significant amount to meet new profile grade requirements, a synchronous lifting system should be used to control and equalize individual jack pressures to insure that the superstructure is lifted uniformly without exceeding the above stated relative elevation differentials. These relative elevation restrictions and system requirements should be included in the plans or special provisions. The relative elevation restrictions should not be exceeded unless analysis indicates that greater differential elevation variances can be tolerated and will not induce stresses in the superstructure elements which will exceed the original allowable design stresses used for the structure.

1.10.4 Jack Capacities

The jack capacities required for lifting should be based on the maximum expected load present during the lift derived from the reactions shown in the Beam Reaction Table included with the plans. The jack capacity provided should be between 50% and 100% greater than the maximum expected loading.

1.10.5 Jack Placement

Unless the diaphragms of the superstructure have been retrofitted or analyzed to carry jacking loads, they should not be used as load carrying members in the jacking and cribbing system. The plans or special provisions should state this restriction when diaphragms are present.

When jacks are placed directly under a beam, the jack should be centered under the web and a steel plate should be placed between the top of the jack and the bottom flange of the beam. When web stiffeners bearing on the bottom flange do not exist directly over the location of the jack under a steel beam, hardwood timbers should be installed tightly between the top and bottom flange to prevent flange rotation. Steel stiffening angles should be attached to the web of the beam when the beam web thickness is not adequate to carry the jacking load. Steel plates should be placed under jacks bearing directly on the existing substructure to distribute the jacking load and prevent damage to the existing concrete.

When lifting the entire superstructure as a unit, jacks should be placed in a manner and in locations that will ensure that the jacks will be equally loaded and the load will be uniformly distributed to the foundation of the jacking system.

1.10.6 Load Distribution

Whenever the jacking system will require that lifting loads be transferred to natural ground, slopewall, roadway shoulder or roadway pavement an adequate distribution of the load should be accomplished using steel beams, timber mats or other means approved by the Engineer. An aggregate leveling base may also be required below the mats when natural ground is used to support the jacking system.

The following maximum allowable pressures should be used to determine the area of the timber mats supporting jacking systems, unless information is available indicating that higher values may be used:

Supporting Material	Max. Allowable Pressure
natural ground (unsaturated)	0.5 Tons / Sq. Ft.
conc. slopewalls & bit. shoulders	1.0 Tons / Sq. Ft.
bituminous pavements	2.0 Tons / Sq. Ft.
concrete pavements	4.0 Tons / Sq. Ft.

1.11 Pin and Link Replacement

1.11.1 General

When pins are found to be defective or "frozen", the pin and link assemblies must be replaced. These assemblies are considered to be fracture critical details for inspection and maintenance purposes, and measures should be taken to immediately correct any deficiencies associated with the pins or link plates.

1.11.2 Pin and Link Replacement

When replacing defective pins, the notes shown in Figure 1.11.2-1 and the features shown in Figures 1.11.2-2 and 1.11.2-3 should be incorporated into the design of the replacement whenever possible. Also, new link plates, designed in accordance with AASHTO specifications, should always be provided when replacing defective pins.

The suspended span must be temporarily supported from below with shoring or from above using a needle beam. General details for temporarily supporting the suspended span using a needle beam are shown in Figure 1.11.2-4. Specific details for the temporary support system are typically to be submitted by the contractor for review and approval by the Bureau of Bridges and Structures and are not shown in the plans. However, pay items and special provisions for the temporary support system should be included with the repair plans.

A Reaction Table, similar to that required for bearing replacements, should be included with the pin and link replacement plans.

1.11.3 Pin and Link Elimination

When the major rehabilitation of a structure is planned, the elimination of the pin and link assemblies should be evaluated. The method used to eliminate the assemblies will depend on the characteristics of the individual structures and may include replacing the assemblies with bolted splices and the installation of counterweights at the simply supported ends of spans. This will eliminate a fracture critical detail, susceptible to sudden failure, from the structure and reduce future maintenance inspection requirements.

Note A:
Existing welds shall be inspected for cracks using liquid dye penetrant or magnetic particle testing. Any cracks that are found shall be identified and reported to the Bureau of Bridges and Structures for further disposition. Clean and paint before installing new link plates.

Note B:
Bore diameter for bushing in link plate, existing webs and web reinforcement plates shall correspond to bushing manufacturer's allowable tolerances for proper functioning. Hole diameter may be adjusted to allow use of stock bushings.

Note C:
Inside face of new link plates shall receive first field coat in shop. The primer shall pass the M.E.K. Rub Test before the first field coat is applied.

Note D:
Actual bushing thickness per manufacturer's specifications. $\frac{1}{4}$'' is approximate. Bushings shall be a self lubricating filament wound epoxy matrix backed Duralon Bearing, metal backed Fiber Glide Bearing or equivalent. No primer or grease shall be allowed on bushings. Bushings shall be suitable for dynamic loads of 20,000 psi.

Note E:
Tighten inside nuts to bring all bushings into firm contact, then back off $\frac{1}{4}$ turn and tighten outer nuts.

Note F:
Apply $\frac{3}{8}$'' bead to face of the web reinforcing plates approximately $\frac{1}{2}$'' from bushing immediately before installing new link plates. Place sealant around nuts after installation. Sealant shall be suitable for prolonged exterior exposure without losing flexibility or adhesion to painted steel surfaces. Proposed products shall be subject to Department's acceptance based on documented testing or other evidence.

Note G:
Body of Pin dimension "a" shall be based on measured thickness of captured plates (including paint), plus $\frac{1}{2}$''.
$a = 2(tl) + tw + \frac{1}{2}''$

Note H:
Nominal Pin diameter (diameter tolerances subject to Specifications of Teflon Bushing Manufacturer and shall be approved by the Engineer). Pin shall be ASTM A276, UNS 21800 (Nitronic 60 or equal) (No step at threads) 12 threads per inch. Install prior to new link plates.

PIN REPLACEMENT DETAIL NOTES

Figure 1.11.2-1

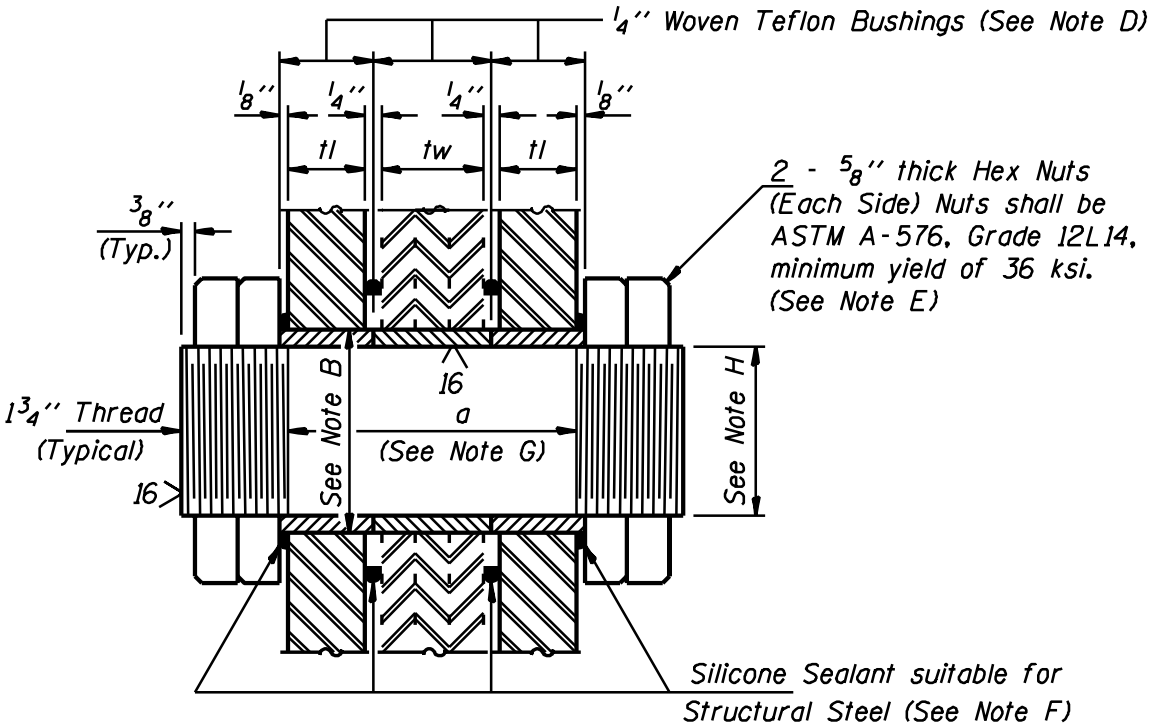

SECTION A-A

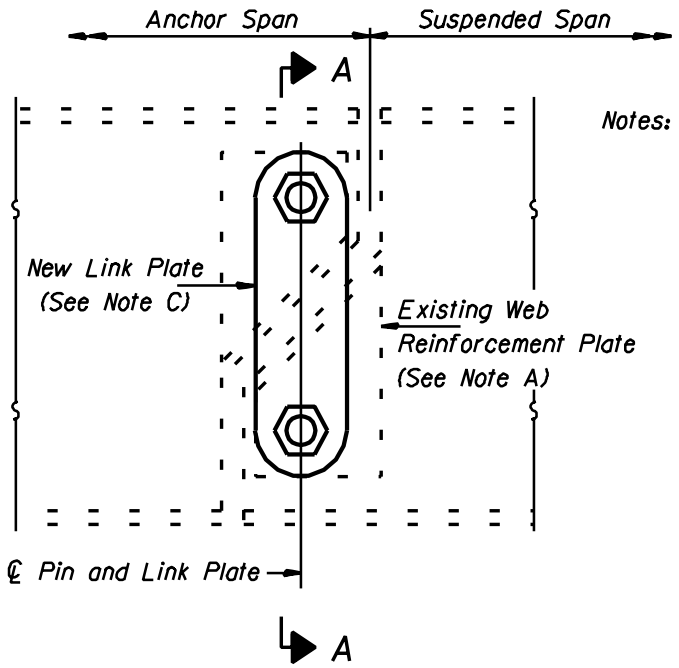

ELEVATION AT PIN CONNECTION

Notes: Provide support for beams at each pin and link plate replacement location; to be paid for as "Temporary Support System". The Pins and Link Plates shall conform to the minimum Charpy V-Notch Toughness of 25 ft.-lbs. at 40° F. The pins, link plates, bushings, nuts and silicone sealant are the items included in "Pin and Link Plate Replacement".

PIN REPLACEMENT DETAIL

Figure 1.11.2-2

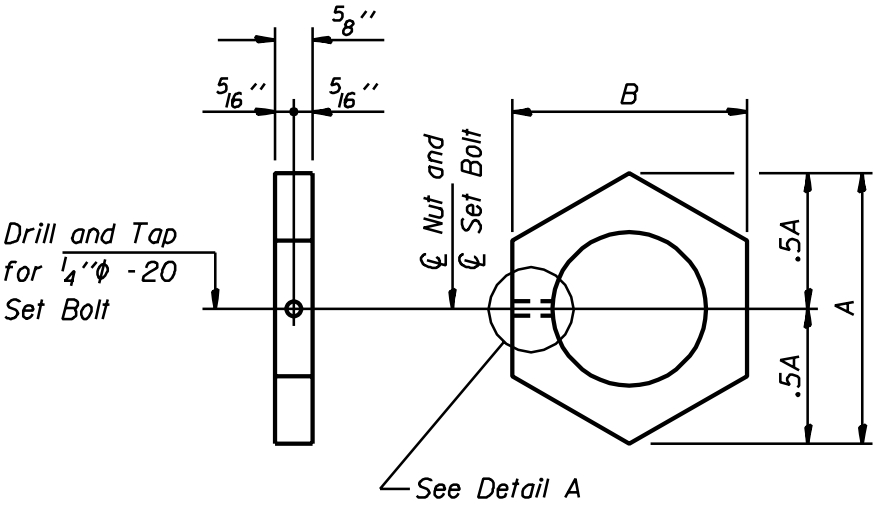

EXTERIOR NUT DETAIL

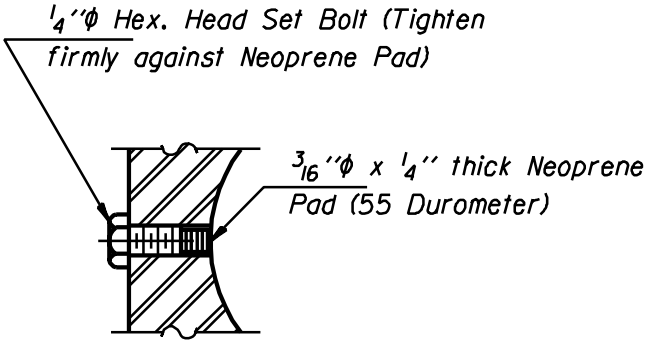

DETAIL A

Set Bolts shall conform to the requirements of ASTM A 307 and shall be galvanized according to AASHTO M 232.

SET BOLT FOR PIN AND LINKS

Figure 1.11.2-3

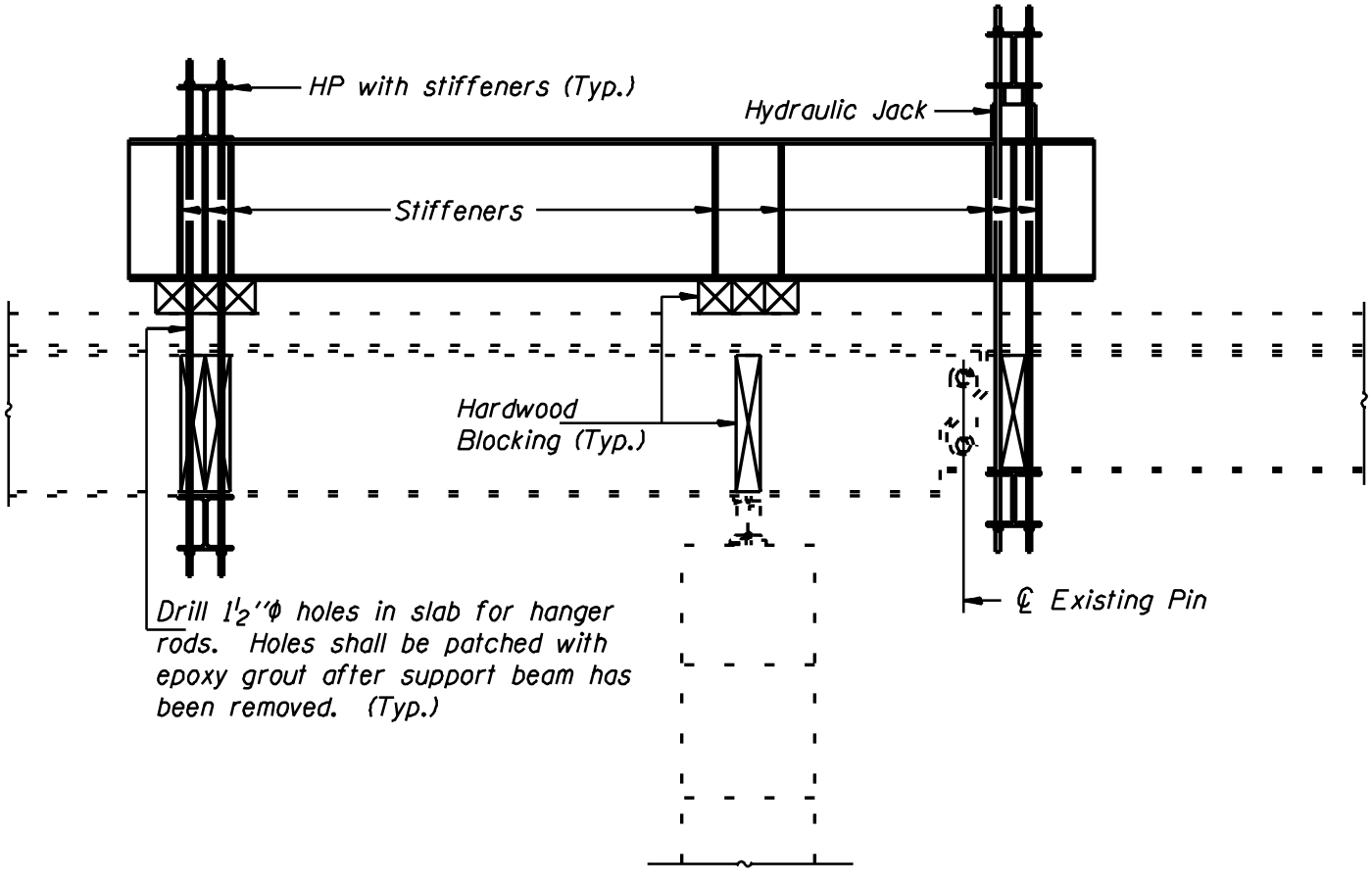

LONGITUDINAL SECTION

SUGGESTED TEMPORARY BEAM SUPPORT SYSTEM

TEMPORARY BEAM SUPPORT DETAILS

Figure 1.11.2-4

1.12 ***Fatigue***

1.12.1 General

"Fatigue" is the general term used to indicate the eventual loss of ductility that may cause cracking in a steel member after repeated loading. The fatigue cracking found in steel structures is generally associated with localized deformations and fabrication operations to which a member has been subjected. Nicks, gouges and cuts present on a member due to vehicle impacts or construction operations can eventually initiate cracking in a member. Tack welds used during construction to ease erection difficulties and unauthorized field welding during maintenance operations can cause fatigue cracking. Fatigue cracks are also frequently found in the area of copes which have been cut with too small a radius or were poorly made.

Fatigue cracks can occur due to in-plane bending or out-of- plane bending. Cracks caused by in-plane bending stresses can occur in any tensile zone of a member. They are usually related to the presence of a weld or surface defect on the member. Fatigue cracks due to in-plane bending stresses can grow quickly and should receive immediate attention. Cracks caused by out-of-plane bending are usually associated with the welded connection of a secondary member to the primary load carrying member. These types of cracks are usually in the web and grow slowly except when located in a tensile zone of the primary member.

A common type of fatigue cracking found in welded plate girders is related to "freezing" of articulated expansion bearings at the simply supported end of the girder. When a pin associated with the bearing "freezes", rotation of the girder over the bearing is restricted. A crack eventually forms between the bottom flange and the web plate along the flange to web weld.

1.12.2 Pre-repair Procedures

When cracks are found, the Bureau of Bridges and Structures should be immediately contacted. Information should be obtained and submitted describing the location and size of all cracks found so that the current structural adequacy and the procedures necessary to contain or repair the cracks can be determined.

The first step during the inspection of a fatigue crack is to locate the ends of the crack. This can be done using dye penetrant or magnetic particle testing. Once the ends of the crack are found, 13/16 inch minimum diameter holes should be drilled as shown in Figure 1.12.2-1 to capture the crack ends to prevent crack growth while repair requirements are being determined or retrofit plans are being prepared. To ensure that the arresting hole captures the end of the crack, the hole should be centered 1/4 inch beyond the apparent crack end. After the arresting holes have been drilled, tests should be performed again to insure that the drilled holes have captured the crack ends. A high strength bolt with washers should be installed when possible in the arresting hole to provide a compressive force in the area of the crack tip and to minimize distortions in the area of the crack that may encourage further growth of the crack.

1.12.3 Repair Considerations

Cracks located in tensile stress areas of a primary load carrying member should be retrofitted to prevent further growth of the existing cracks and to prevent additional cracks from developing. The retrofit details should restore the load carrying capacity lost when cracking has significantly affected the section properties of the member. Figure 1.12.3-1 shows details used to repair the end of a stringer where cracking has initiated due to low tensile stress repeatedly occurring in the area of a poorly coped web. Details for the repair of a beam when cracking occurs at the end of a welded coverplate are shown in Figure 1.12.3-2. A similar detail should be used to retrofit the ends of coverplates during bridge deck replacement projects.

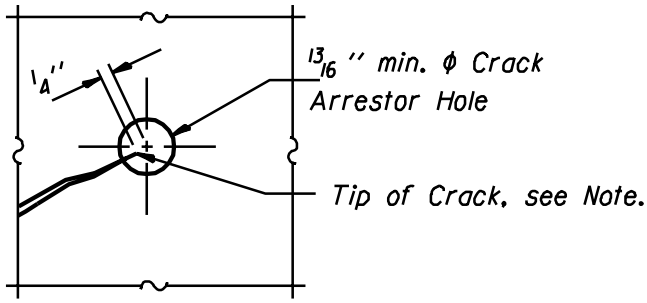

CRACK ARRESTOR HOLE DETAIL

Note: Locate crack tip using liquid dye penetrant or magnetic particle testing. Drill 13/16'' min. ϕ Crack Arrestor hole at the crack tip. After crack arrestor hole has been drilled, dye penetrant or magnetic particle testing shall be used to verify that the drilled hole has captured the crack tip. Cost shall be included in the cost of "Furnishing and Erecting Structural Steel".

CRACK ARRESTOR HOLE

Figure 1.12.2-1

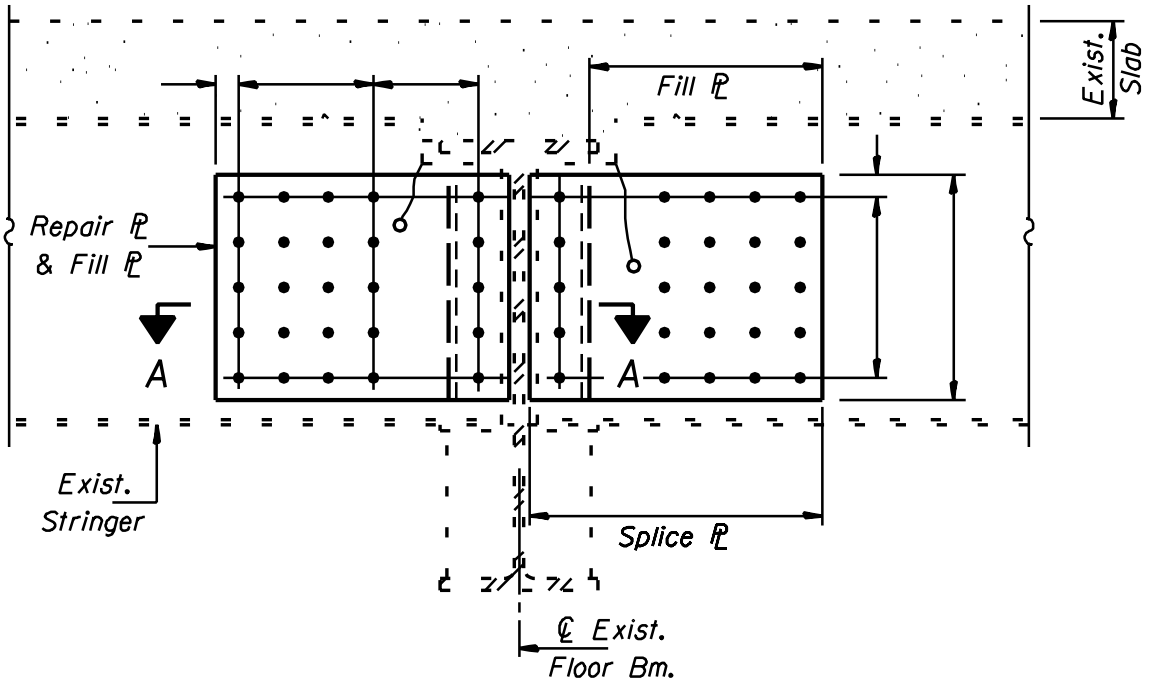

SECTION THRU FLOOR BEAM

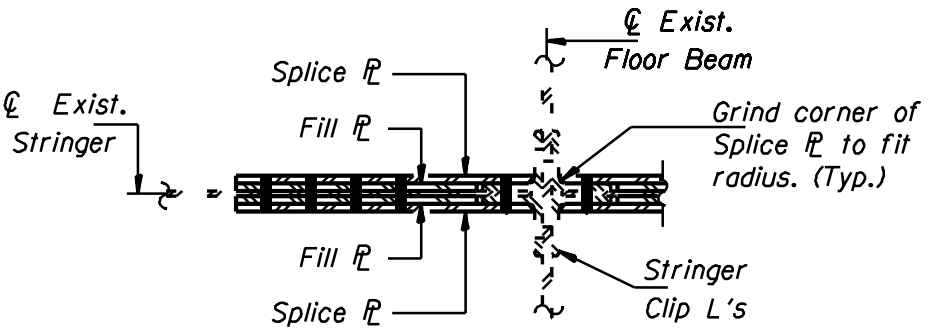

SECTION A-A

END OF STRINGER REPAIR DETAIL

Figure 1.12.3-1

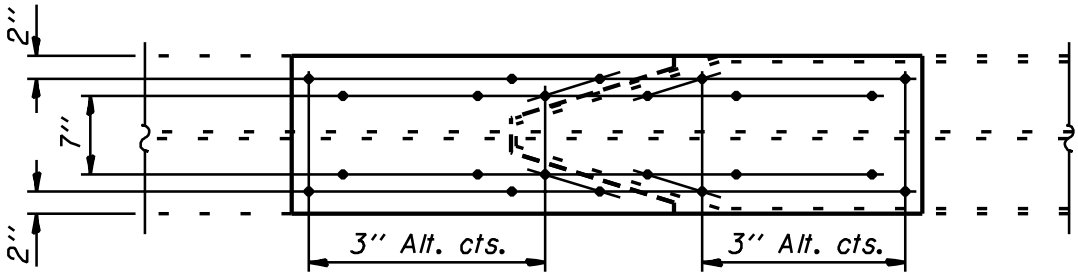

14'' AND 16'' FLANGE EXAMPLE

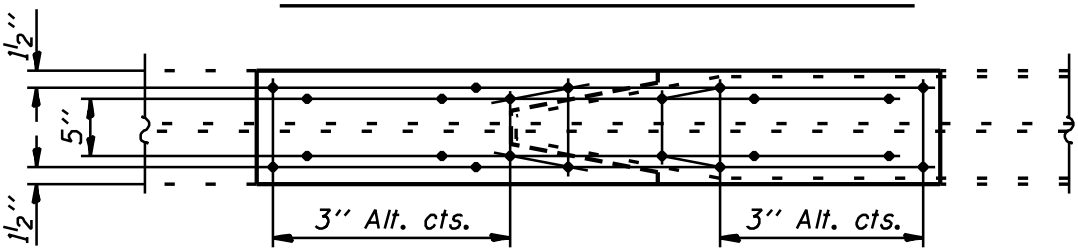

10'' AND 12'' FLANGE EXAMPLE

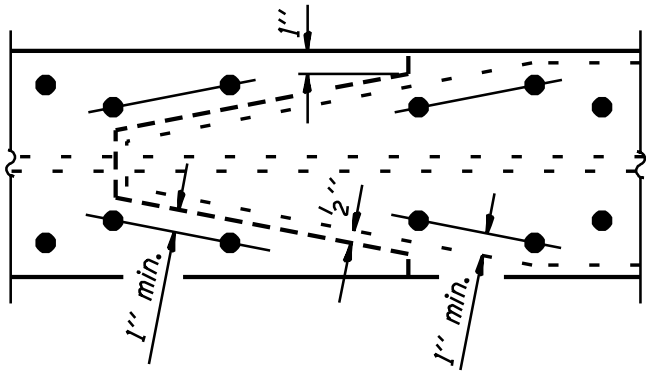

TYPICAL CLEARANCE DETAIL

COVER PLATE
REPAIR DETAIL

Figure 1.12.3-2

When the cracking is due to out-of-plane bending, the connection of the secondary member to the primary member should be retrofitted to eliminate the cause of the cracking. This is usually achieved by retrofitting the connection details to make the connection more flexible in order to relieve out-of-plane bending stresses, or by retrofitting the connection details to stiffen the connection in order to prevent out-of-plane displacements. Of these two methods, the stiffening of the connection to resist out-of-plane displacement is usually the most effective in arresting and preventing crack growth. Figure 1.12.3-3 illustrates a method of increasing the flexibility of a floorbeam to girder connection by removing a portion of the connection plate. The resistance of a connection to out-of-plane displacements can be increased as illustrated in Figure 1.12.3-4 and Figure 1.12.3-5.

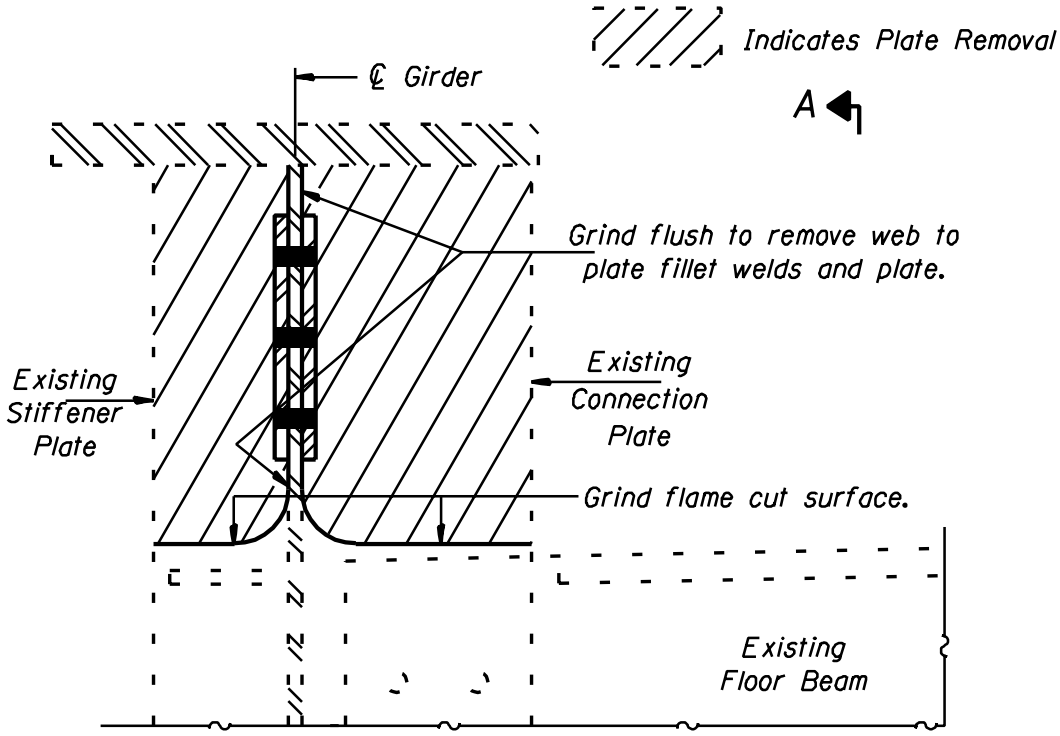

SECTION THRU GIRDER A

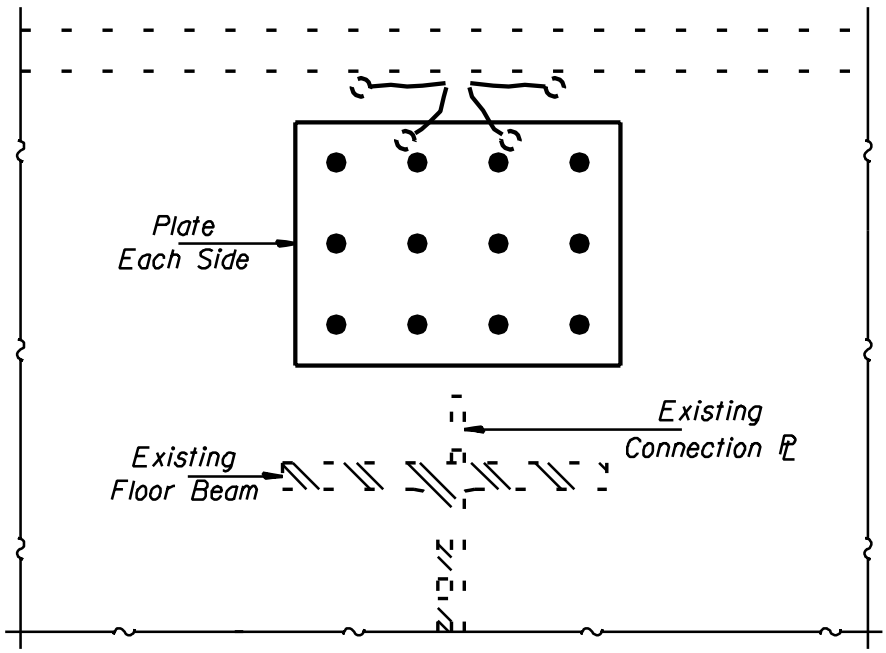

SECTION A-A

FATIGUE REPAIR TO INCREASE FLEXIBILITY

Figure 1.12.3-3

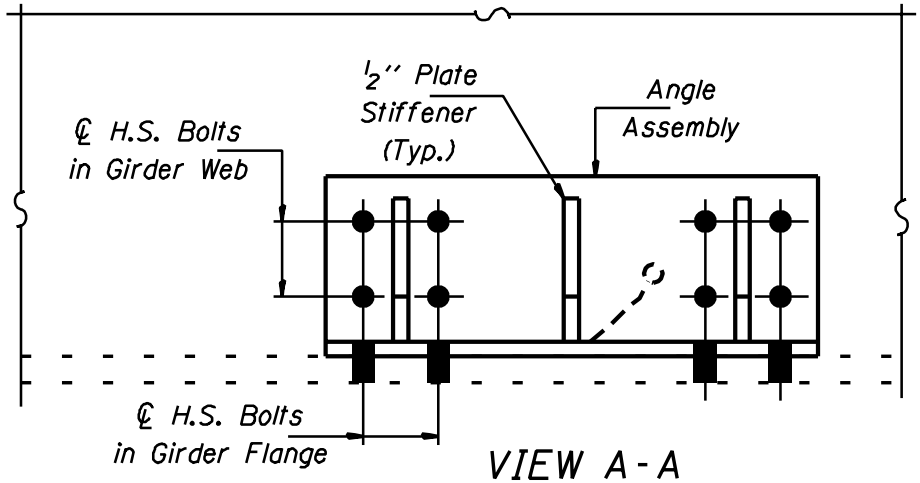

VIEW A-A

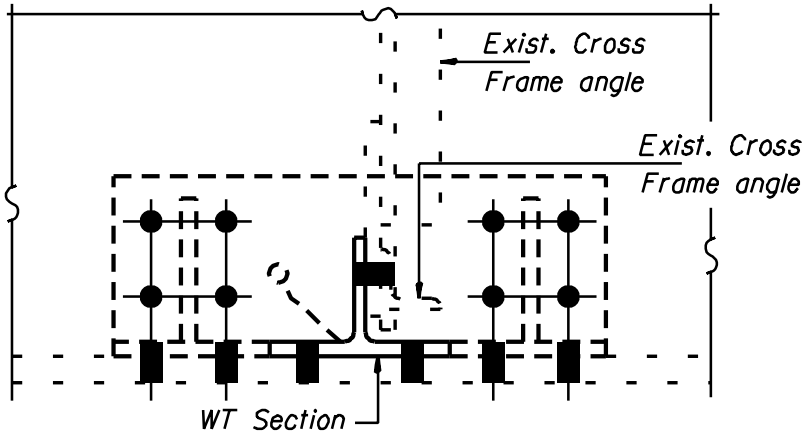

VIEW B-B

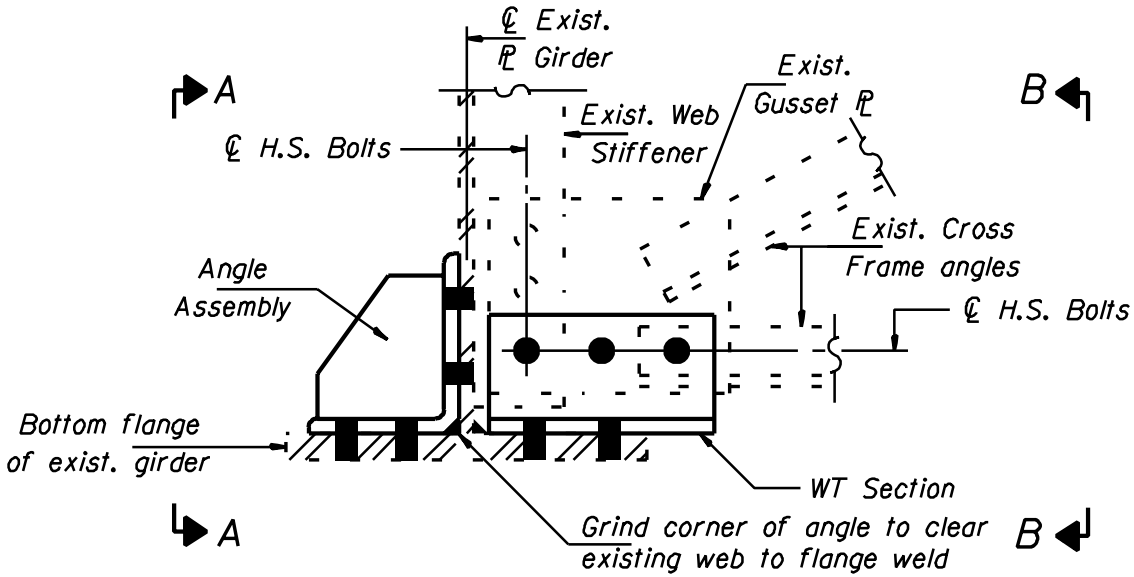

SECTION AT CROSS FRAME CONNECTION

BOLTED STRENGTHENING
FATIGUE REPAIR

Figure 1.12.3-4

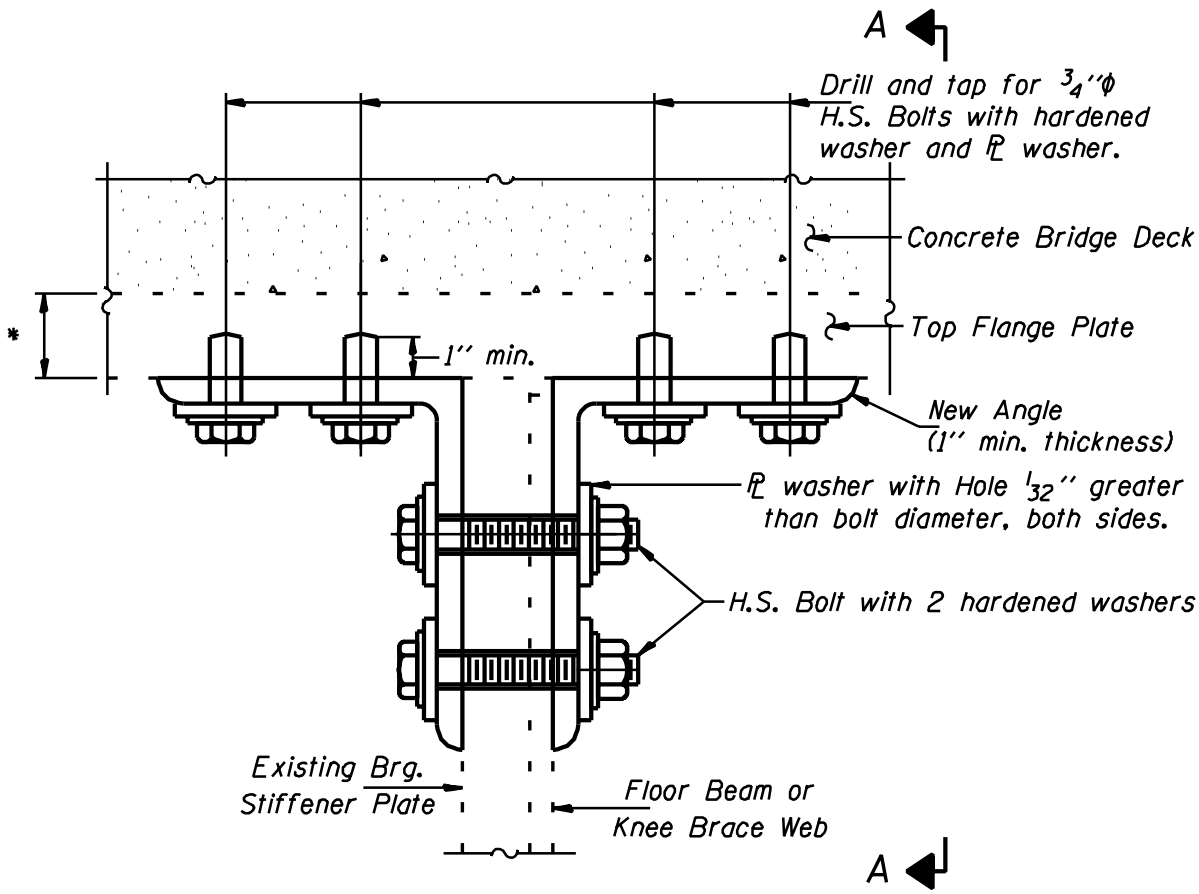

PARTIAL ELEVATION

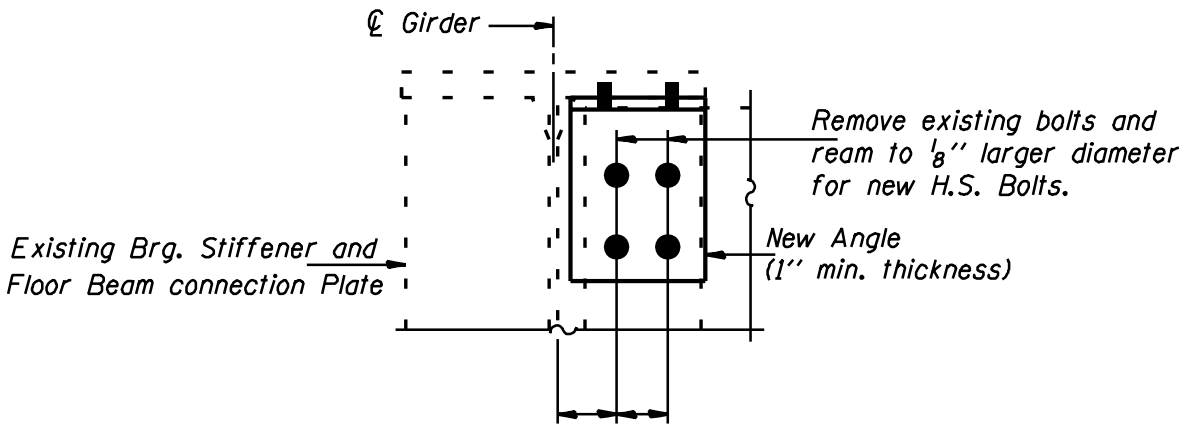

VIEW A-A

* Existing flange thickness to be a minimum of 1" thick for drilling and tapping. Use alternate method of attachment to top flange when the flange thickness is less than 1".

FATIGUE REPAIR TO INCREASE STIFFNESS

Figure 1.12.3-5

To correct the cracks which form in the web near the bottom flange of girder ends located over "frozen" articulated bearings, a portion of the bottom flange and web plate must be repaired as shown in Figure 1.12.3-6. The defective bearing must also be replaced to prevent cracking from recurring.

Retrofits should be made using bolted details. If welded details are proposed, the stresses in the primary load carrying member at the location to be welded must be considered to determine the effect that welding may have on the fatigue life of the member at that location. Also, if field butt welds are required, they must be tested using nondestructive methods and the method of testing must be specified in the plans.

Tack welds found in the tensile zone areas of a primary load carrying member should be removed by grinding. The grinding should be done parallel to the direction of the primary stress in the member when possible.

When plug welds are found in tensile zone areas, they should be removed by drilling a hole through the plug large enough to remove all of the weld material. If possible, high strength bolts should be installed in the holes drilled to remove the plug welds.

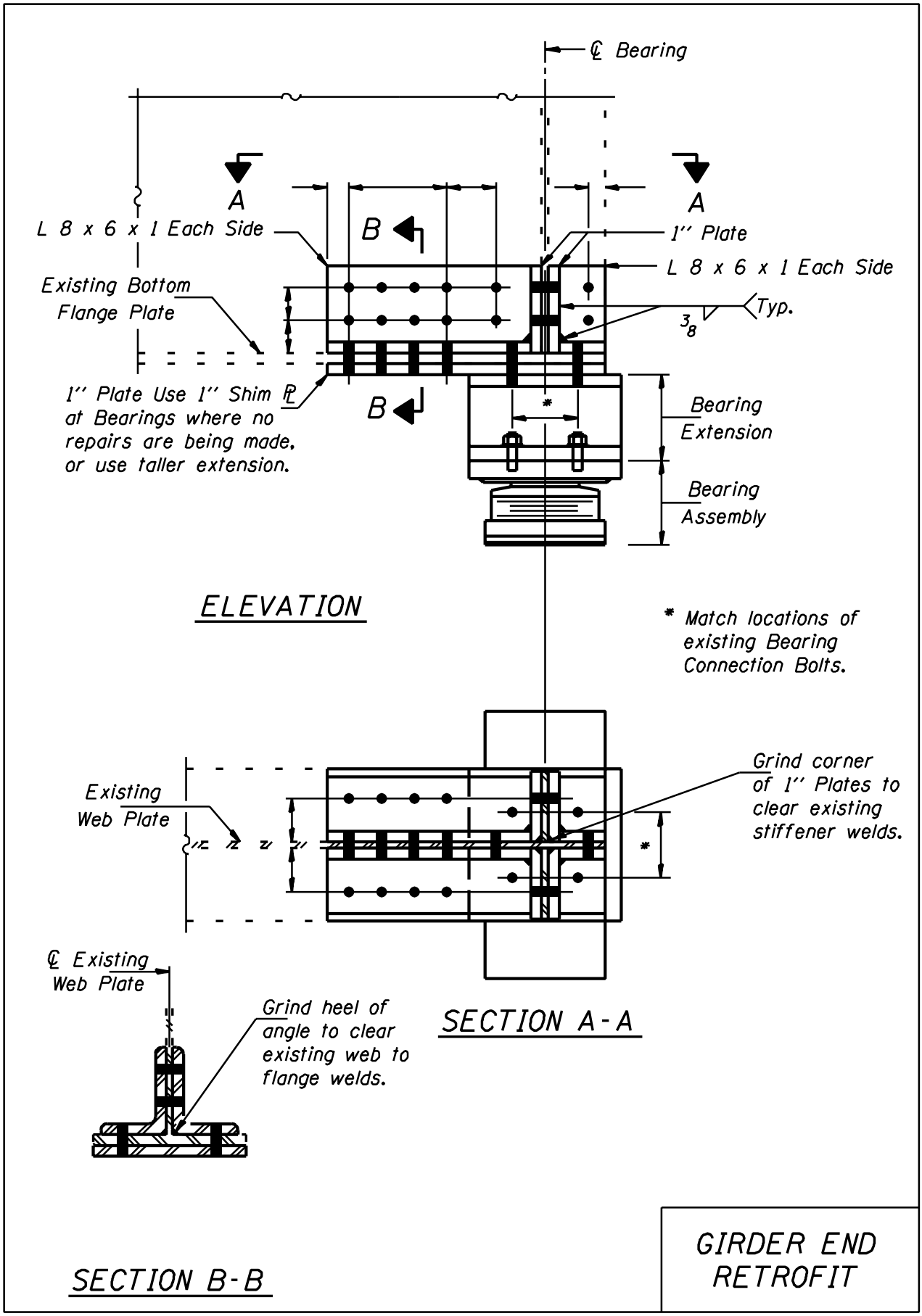

Figure 1.12.3-6

1.13 Impact Repairs - Steel Beams

1.13.1 Determination of Repair Requirements

Based on the inspection information obtained in accordance with the procedures provided in the Repair Section for the field inspection of impact damaged steel structures, a determination can be made to:

1. straighten a damaged beam.
2. straighten and strengthen the damaged portion of the beam.
3. replace the damaged portion of the beam.

The guidelines presented in the National Cooperative Highway Research Program (NCHRP) Report 271 should be used when determining which of the above actions should be taken to repair an impact damaged steel structure.

The NCHRP Report 271 guidelines for choosing a repair method are based on determining the amount of strain the impact has placed in the steel. The strain induced at any point on the member can be approximated by using the measured impact deflections adjacent to that point to determine a radius of curvature as illustrated in Figure 1.13.1-1.

Based on the approximated strain, the following NCHRP guidelines should be used to determine the repair requirements for primary tension members:

1. If the strain in the member is equal to or less than the yield point strain of the steel, straightening is not required unless necessary to restore the structure to its original appearance.
2. If the strain in the member is greater than the yield point strain but less than or equal to 15 times the yield point strain, the member can be straightened without strengthening.

3. If the strain in the member is greater than 15 times the yield point strain but less than 5 percent nominal strain, the member can be straightened without strengthening. However, if the damage is located in a highly fatigue susceptible area (lower than category C) the beam should be strengthened by adding material to the beam to provide 50 percent additional cross-sectional beam area in the damaged highly fatigue susceptible area.
4. If the strain in the member is greater than 5 percent nominal strain and straightening is attempted, the beam must be strengthened after straightening to provide additional cross sectional beam area equivalent to the existing beam (100 percent strengthening). Beams with extensive damage exceeding 5 percent nominal strain are typically replaced.

The repair requirement guidelines are illustrated graphically using a stress and strain diagram in Figure 1.13.1-2. Using approximated impact strains should be considered an aid rather than an exact solution for determining repair requirements. The age of the structure, visibility of the structure to the traveling public, roadway closure requirements during repair operations, plans for future replacement or rehabilitation of the structure and other factors peculiar to each bridge impact situation should be considered when determining the extent of member repairs or replacement required.

The guidelines given for determining repair requirements for primary members in tension or bending are based on the effect of the damage on the serviceability or fatigue life of the member. Compression members are not subject to the same guidelines and may be straightened without strengthening regardless of the impact strain unless fracture has occurred or deformations are too large to allow the member to be adequately straightened.

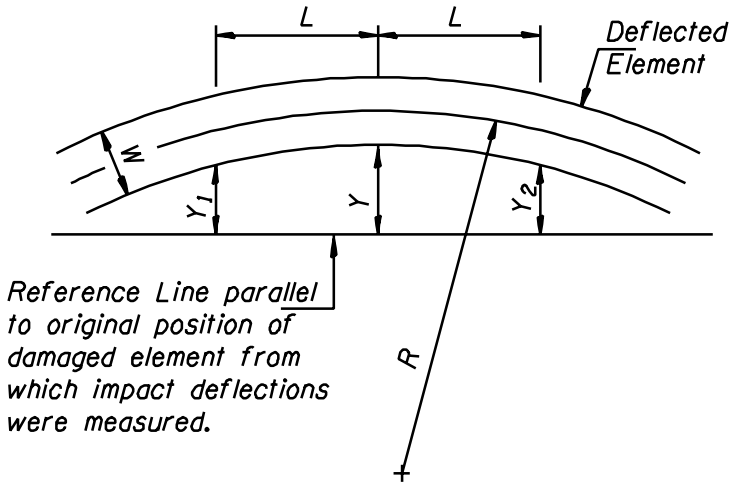

CALCULATION OF DAMAGE CURVATURE

$$R \cong \frac{L^2}{Y_1 + Y_2 - 2Y}$$

L = increment lengths at which deflection measurements were taken.

Y = offset of deflected element from reference line.

R = approximate radius of curvature at location of offset Y.

MINIMUM ALLOWABLE RADII OF CURVATURE

Radius of Curvature at Yield Strain:

$$R_y = \frac{WE}{2F_y}$$

Approximate Radius of Curvature at 15 x Yield Strain:

$$R_{15y} = \frac{WE}{15 \times 2F_y}$$

Approximate Radius of Curvature at 5% Strain:

$$R_5 = \frac{W}{0.1}$$

W = the thickness of the deflected element measured in the direction of the deflection offsets measurements.

E = Modulus of Elasticity of the damaged Steel.

F_y = Yield point stress of the damaged Steel.

The information shown in this figure is a summary of the information and procedures presented in NCHRP Report 271. When the radius calculated exceeds the radius of curvature at yield, the calculated radius should be considered an approximation for use in determining repair needs. Persons using this information should obtain a copy of the report in order to familarize themselves with the assumptions made in the derivation of this procedure.

DAMAGE CALCULATIONS BASED ON NCHRP 271

Figure 1.13.1-1

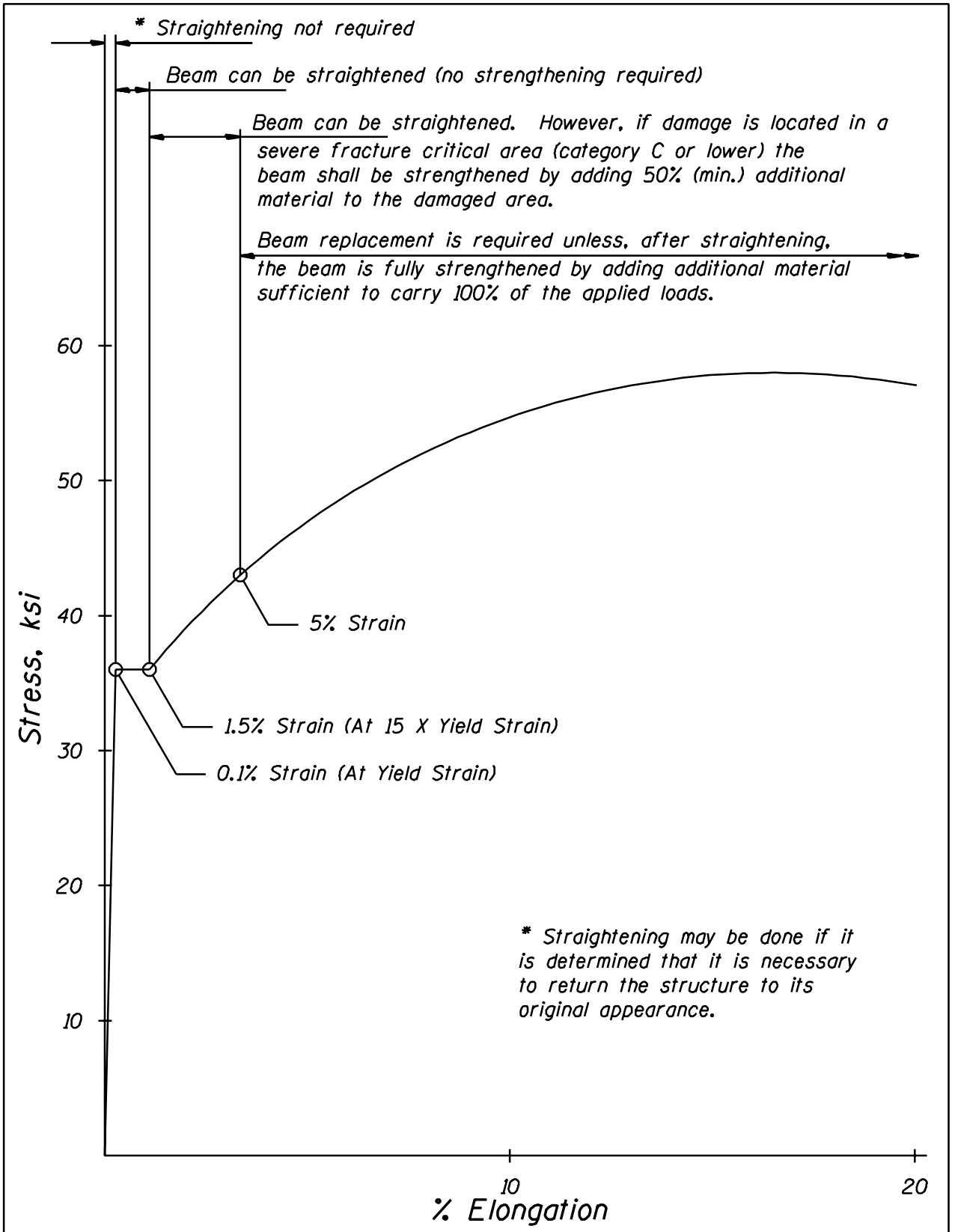

TYPICAL STRESS-STRAIN CURVE FOR A36 STRUCTURAL STEEL

GENERAL GUIDELINES BASED ON NCHRP 271

Figure 1.13.1-2

1.13.2 Beam Straightening and Strengthening

At the present time, the Department is straightening damaged beams using mechanical methods only. The Department is currently experimenting with the use of heat to straighten beams. Until the experimental heat straightening projects have been completed and evaluated, damaged beams should only be straightened using mechanical methods.

The mechanical straightening of damaged beams is accomplished using timber bracing, jacks, cables and winches between the beams to push or pull the damaged beam back to its original configuration. Typical details associated with beam straightening are shown in Figures 1.13.2-1, 1.13.2-2 and 1.13.2-3. After straightening, the configuration of the damaged beam should meet the tolerances specified for new fabrication in the current issue of the Standard Specifications for Road and Bridge Construction.

After straightening operations are completed, welded connections in the damaged area must be inspected and welds should be nondestructively tested using magnetic particle or dye penetrant testing at locations where visible evidence of damage exists. If cracks are found after straightening, further retrofitting of the member will be necessary.

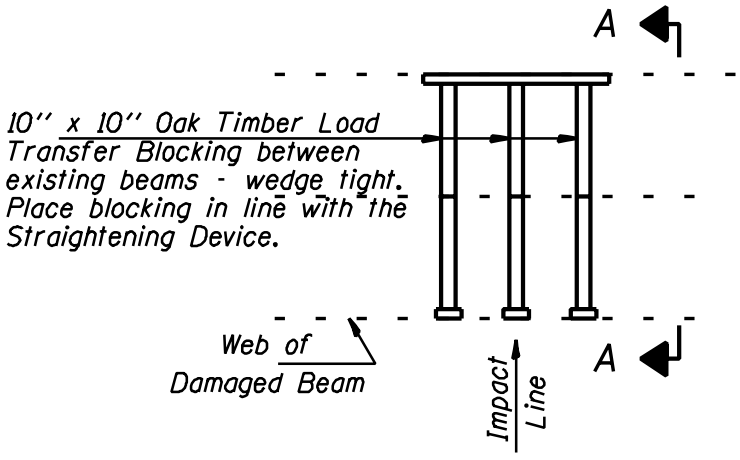

PARTIAL PLAN

Note: Straightening force shall be maintained on all load transfer blocking during beam straightening.

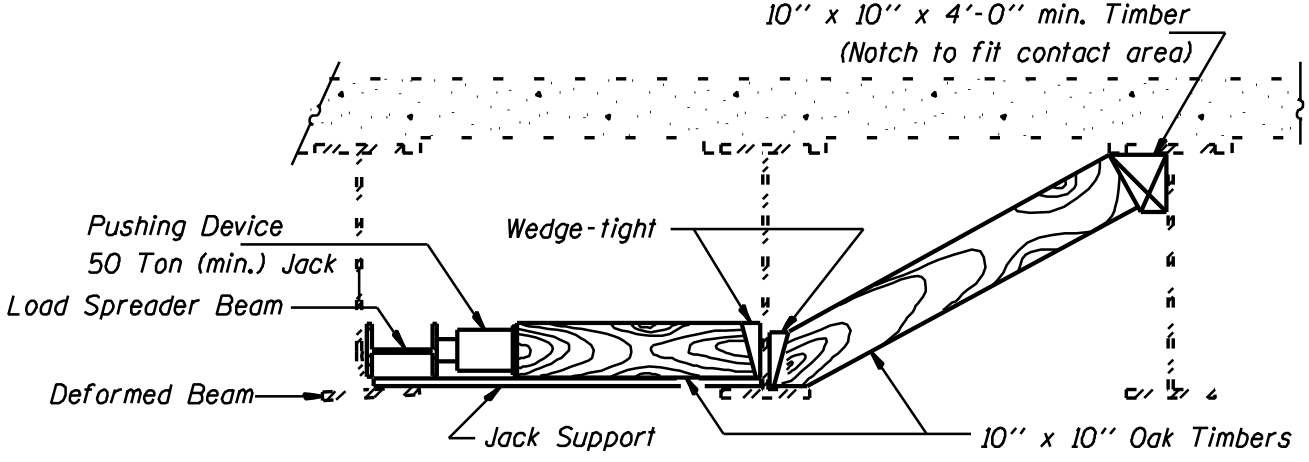

SECTION A-A

(PUSHING DEVICE)

SUGGESTED BEAM STRAIGHTENING METHODS

Figure 1.13.2-1

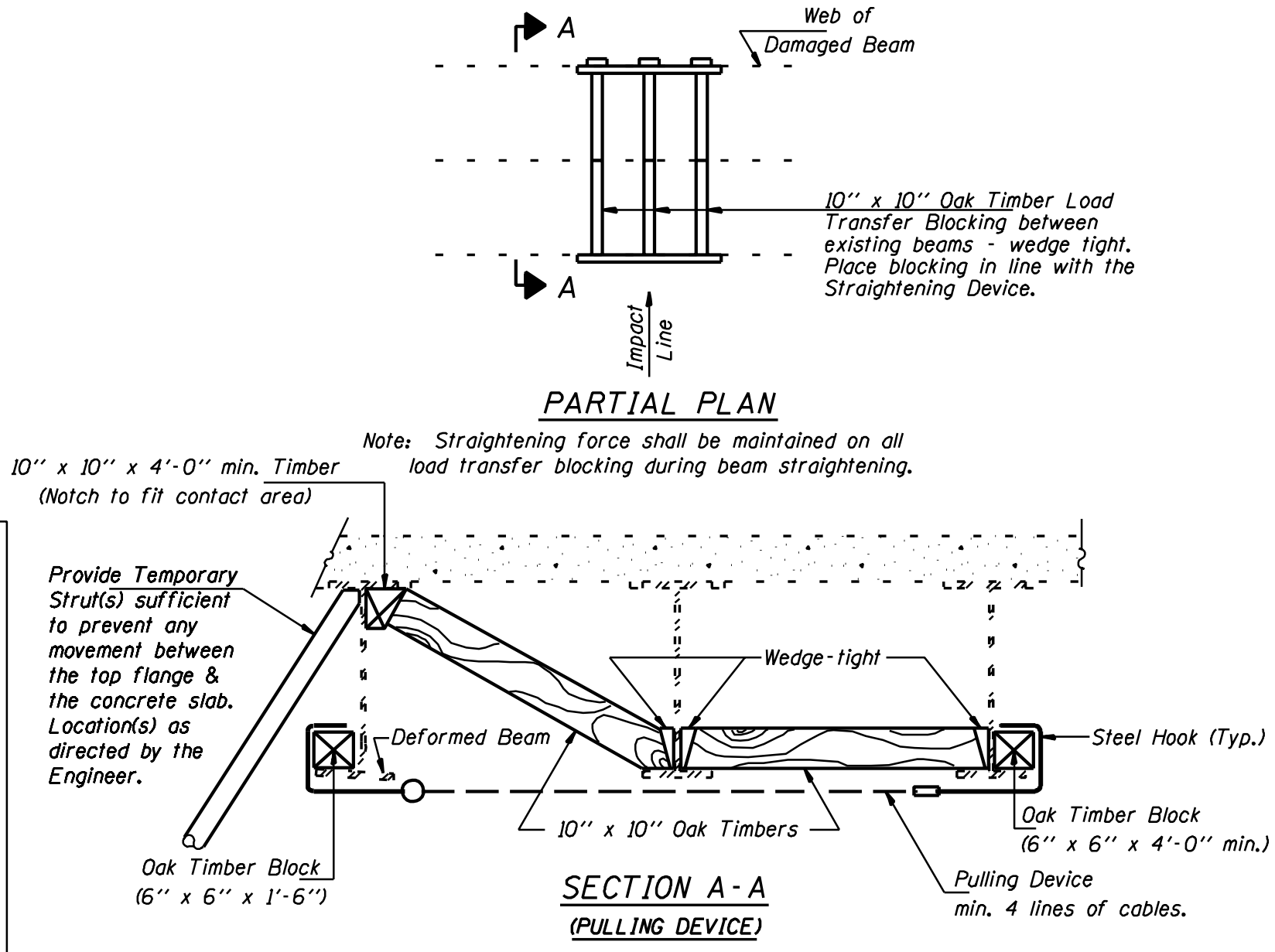

Figure 1.13.2-2

SUGGESTED BEAM
STRAIGHTENING METHODS

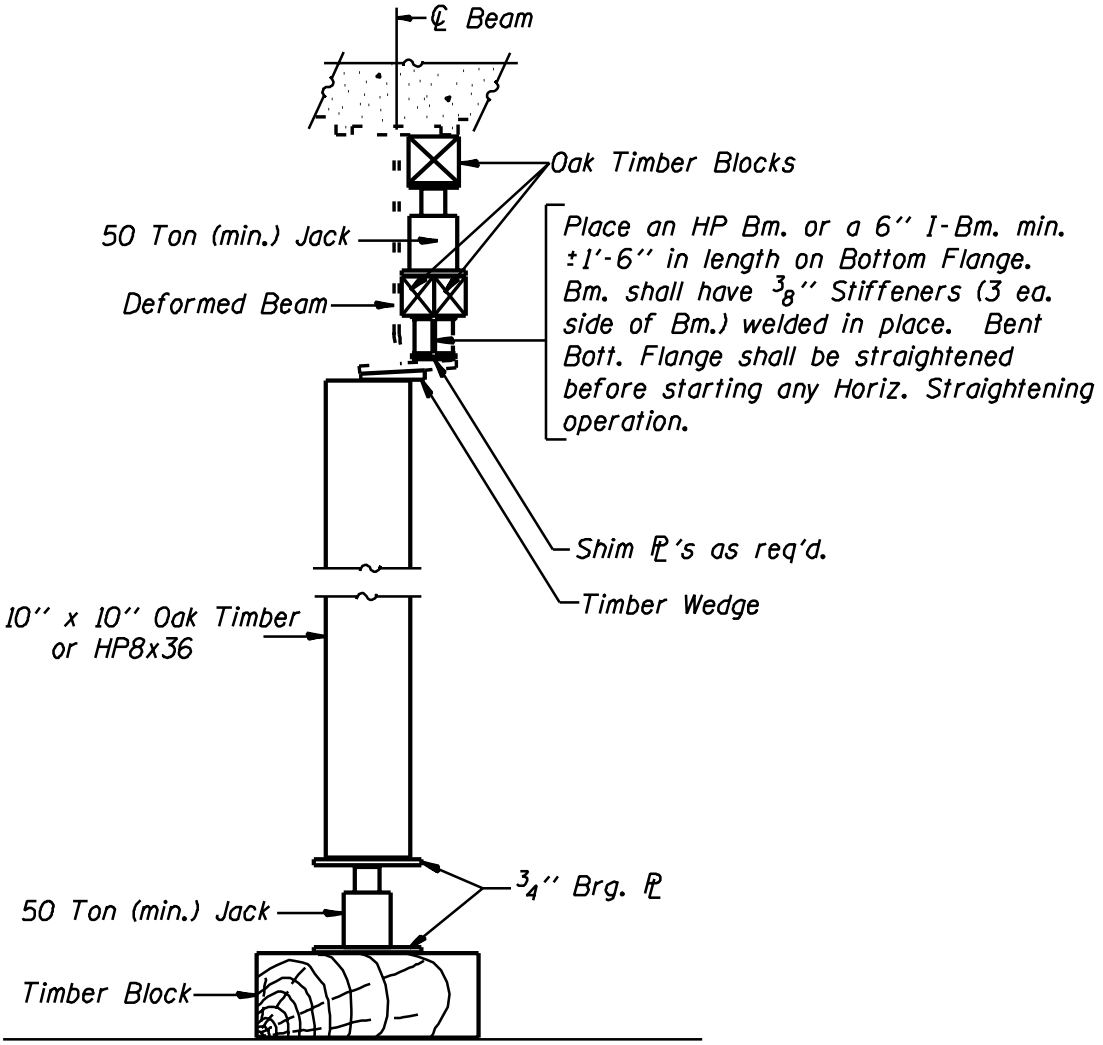

VERTICAL STRAIGHTENING DETAIL

SUGGESTED BEAM STRAIGHTENING METHODS

Figure 1.13.2-3

When strengthening is necessary after straightening or grinding the damaged area, bolted plates should be used. The plates should be placed continuously through the entire damaged area where the impact strains indicate that strengthening is required, with sufficient bolts to adequately stitch the strengthening plates to the damaged beam. The strengthening plates should extend beyond the above mentioned area for a distance sufficient to install an adequate number of bolts in the flange and/or web to transfer the loads from the strengthening plates to the portion of the beam not requiring strengthening. These requirements are illustrated in Figure 1.13.2-4.

Gouges caused by the impact should be ground to eliminate sharp or sudden irregularities in the beam surface. Grinding should be done in such a way as to provide a smooth transition with a maximum slope of 3:1 between the damaged and undamaged surfaces as illustrated in Figure 1.13.2-5. Long or deep gouges should be evaluated to determine if it will be necessary to strengthen the gouged area after grinding. After grinding, the gouged area should be checked for cracks using nondestructive testing methods.

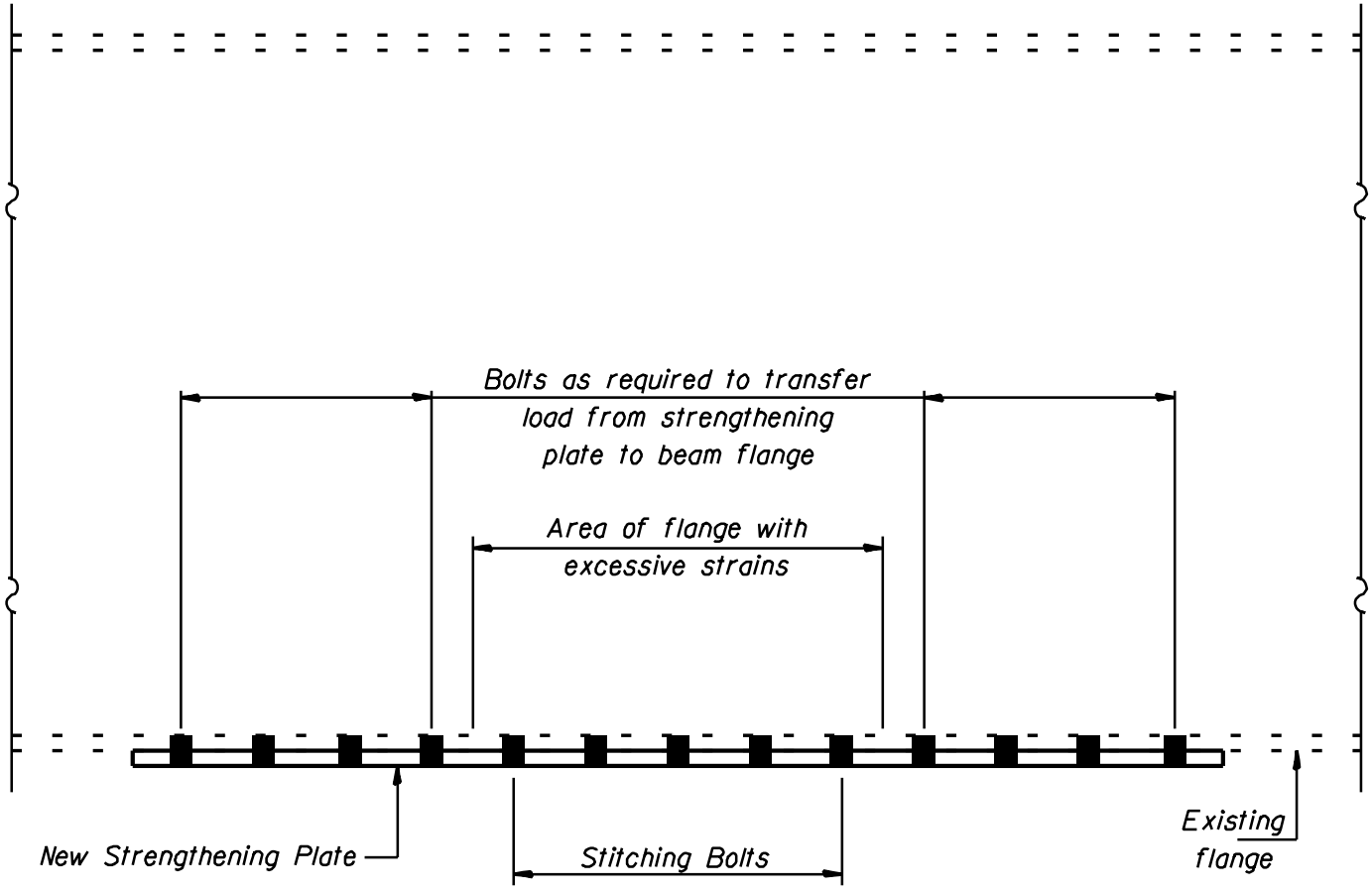

PARTIAL ELEVATION

If existing vertical clearance to strengthening plate is below specified minimums in the IDOT Design Manual consider placing 2 repair plates on top of flange.

STRENGTHENING DETAILS

Figure 1.13.2-4

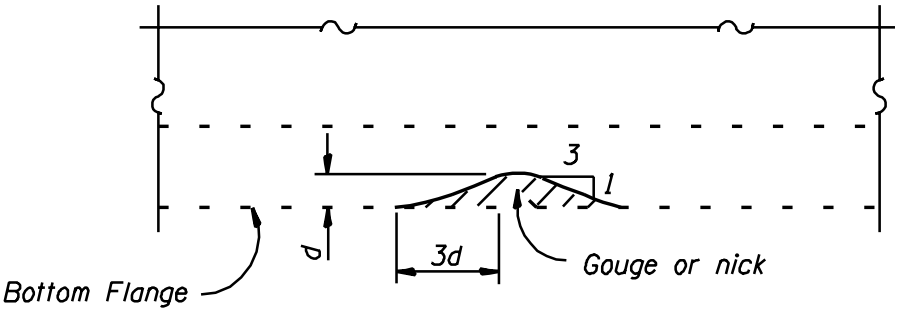

ELEVATION

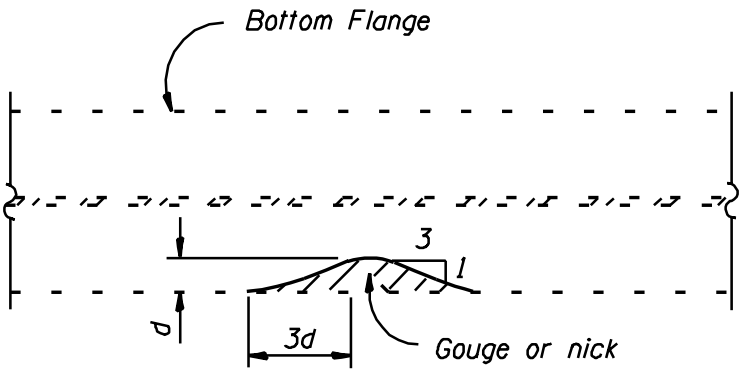

PLAN

GRINDING DETAIL

GRINDING DETAIL

Figure 1.13.2-5

1.13.3 Beam Replacement

Beam replacements are typically done in the interior span areas of structures between points of deadload contraflexure. Beam splices may be installed at locations where field splices currently exist or at new locations. When an existing splice location is deformed and cannot be straightened for reuse, a new splice can be installed adjacent to the existing splice at a location where the existing beam can be adequately straightened for splicing with the new beam. Occasionally the replacement will extend to a point of simple support. If unavoidable, due to traffic control restraints or other reasons, beam removal and replacement may require a new beam splice at a location where sizable deadload moments occur in addition to the liveload moments. The removal and replacement of a portion of the existing deck slab, as shown in Figure 1.13.3-1, is required at the locations where the top flange of the new and existing beams are to be spliced.

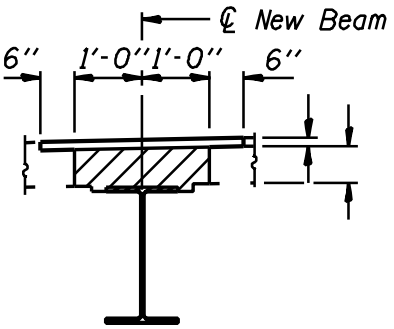

SECTION A-A

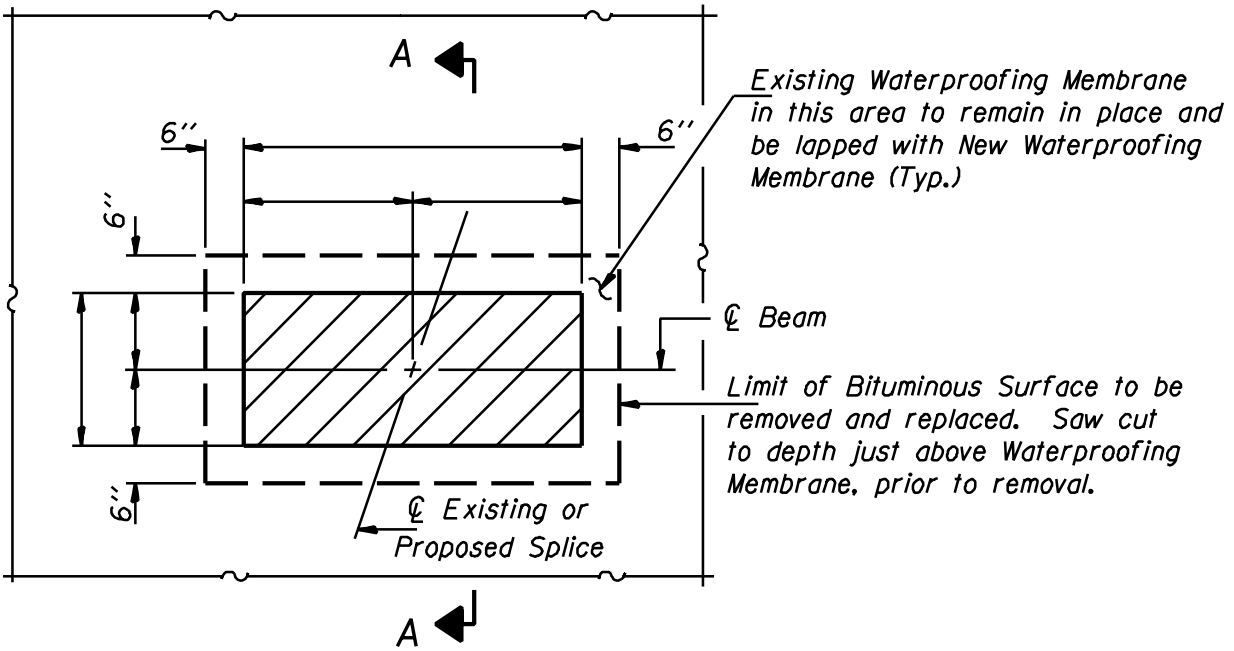

TYPICAL CONCRETE & BITUMINOUS SURFACE REMOVAL AND REPLACEMENT

Hatched areas indicate concrete sections to be removed and replaced. Perimeters of concrete removal areas shall be saw cut $\frac{3}{4}$'' prior to the removal of concrete.

Reinforcement shall be cut only if required for fitting bolts. Cut reinforcement shall be spliced as directed by the Engineer. Cost shall be incuded in the cost of "Concrete Removal".

The cost of removing and replacing the existing bituminous surface, waterproofing membrane, and saw cutting shall be incidental to "Concrete Superstructure".

DECK SLAB REMOVAL FOR BEAM REPLACEMENT

Figure 1.13.3-1

Noncomposite beams can be removed and replaced without removing the existing concrete deck slab. However, the deck must be temporarily supported during the replacement of a noncomposite beam. Figure 1.13.3-2 and Figure 1.13.3-3 provide details for a method of temporarily supporting a deck slab during the replacement of a damaged noncomposite beam. When inserting a new noncomposite beam into the existing top flange pocket of an existing deck, the edges of the top flange should be ground as shown in Figure 1.13.3-4 to ease the installation.

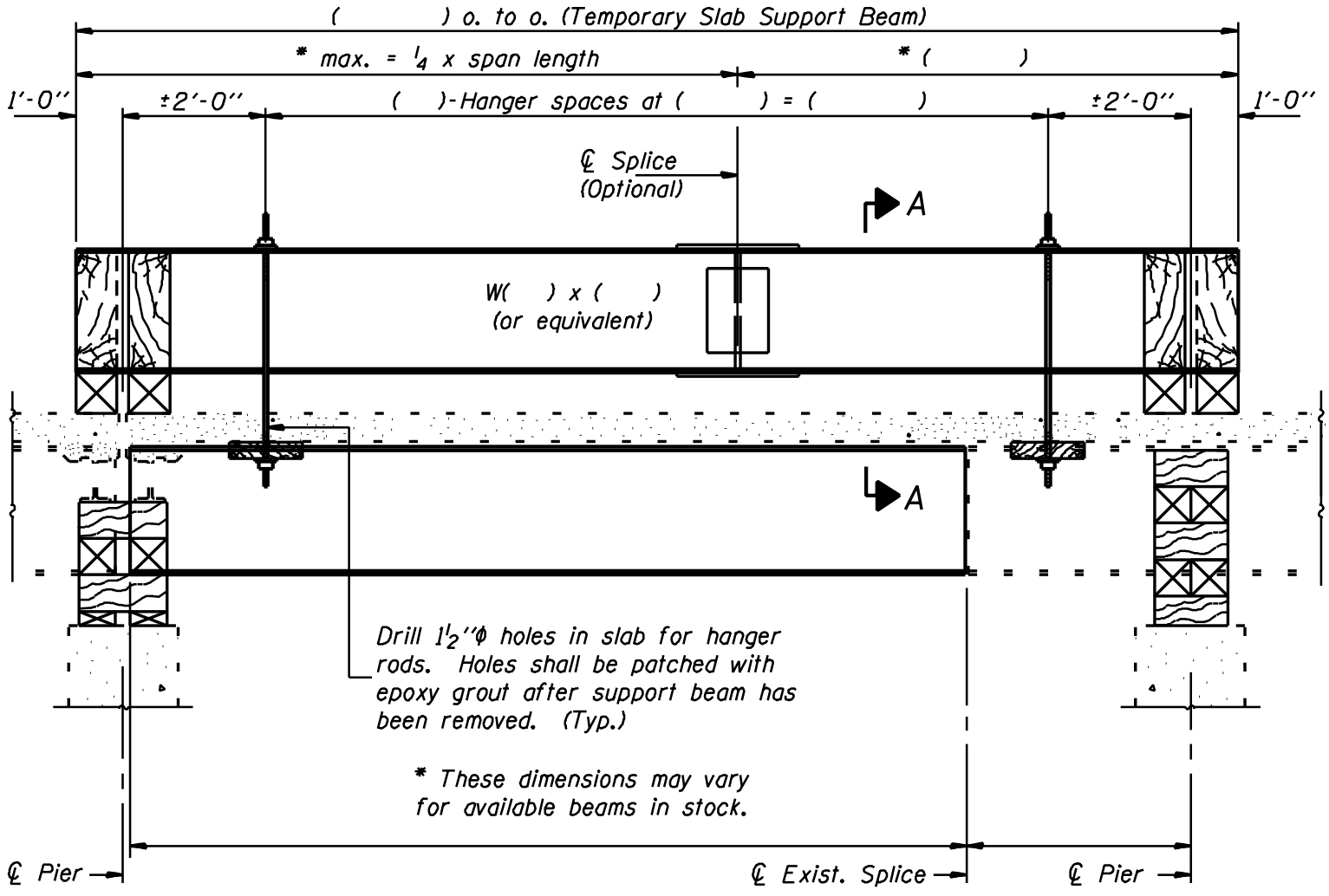

LONGITUDINAL SECTION

SUGGESTED TEMPORARY SLAB SUPPORT SYSTEM

TEMPORARY SLAB SUPPORT DETAILS

Figure 1.13.3-2

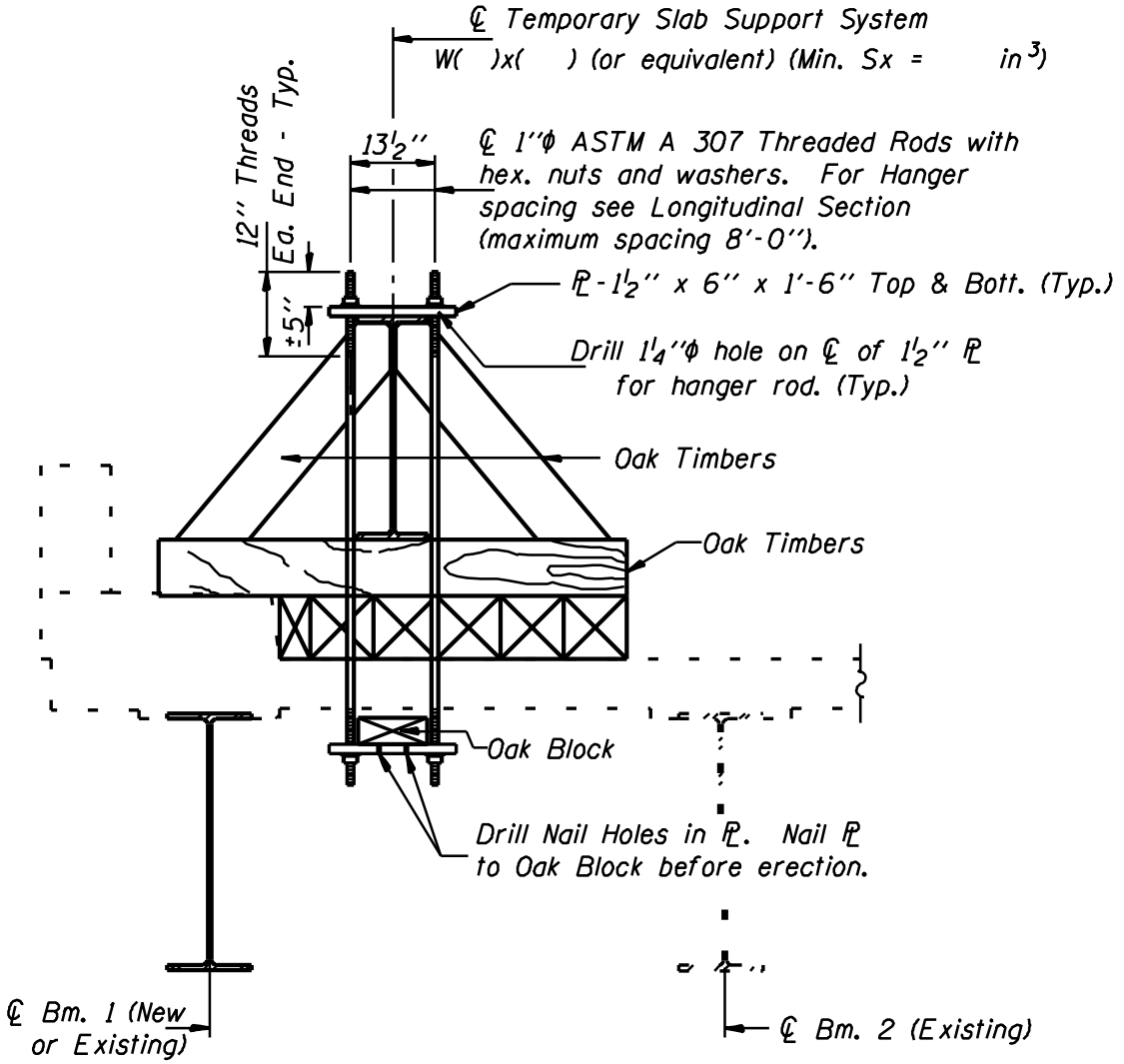

SECTION A-A

TEMPORARY SLAB SUPPORT DETAILS

Figure 1.13.3-3

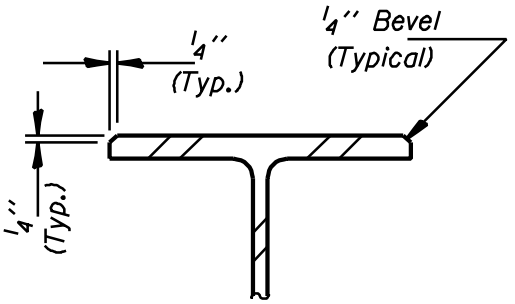

PARTIAL SECTION THRU
NEW NON-COMPOSITE BEAM

TOP FLANGE BEVEL
GRIND DETAIL

Figure 1.13.3-4

Removing the existing deck is usually necessary when replacing damaged composite beams. However, if it is not possible to remove the deck for the replacement of the damaged composite beam, the existing top flange can be left in place and a new beam can be field attached to it. The new beam, which is to be attached to the existing beam flange, should be designed as if it were a noncomposite member in order to account for the reduced quality control associated with field welding operations. Although occasionally used to reduce the traffic lane closure time on bridges with very high traffic volumes, this method is discouraged because of the amount of field cutting and welding required. Figure 1.13.3-5 and Figure 1.13.3-6 shows the general details for methods which have been used to attach a new beam to an existing composite beam flange which has been left in place.

During beam replacements, temporary shoring and cribbing should be placed under portions of the existing beam which are to remain in place at locations sufficient to maintain the as-built profile of the structure and provide for adjustments during field splicing of the replacement beam. As a minimum, this requires the placement of shoring and cribbing immediately adjacent to the location of the new field splices and, for longer spans, in the spans adjacent to the new field splices.

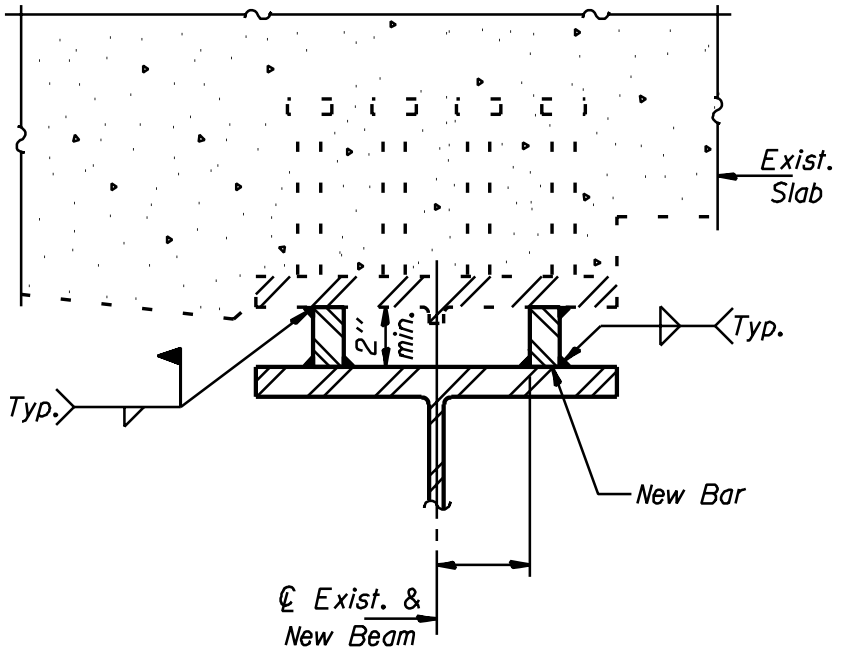

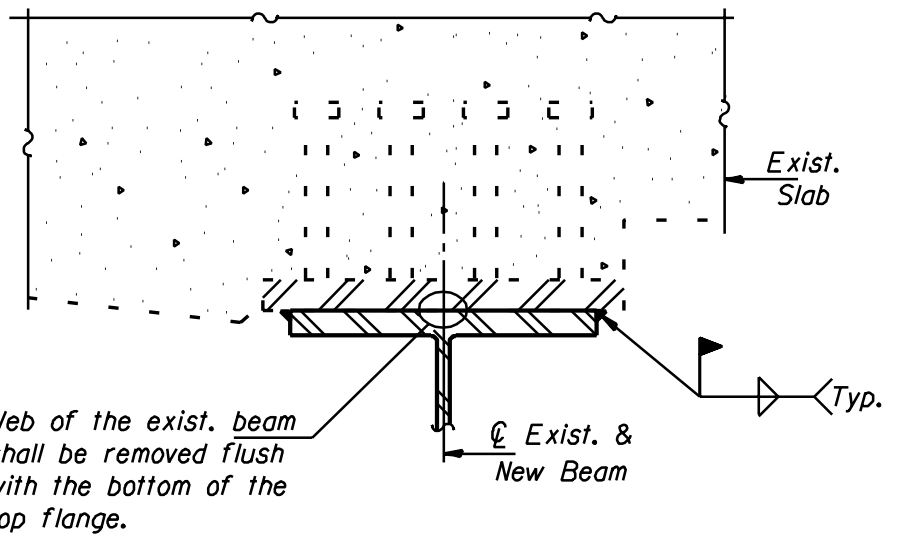

Notes: Care shall be taken to ensure that the New Beam section maintains tight contact with the existing top flange during the welding procedure.

All existing paint, scale, rust and foreign material in the areas to be field welded shall be removed prior to welding.

PARTIAL BEAM REPLACEMENT FOR COMPOSITE BEAMS

Figure 1.13.3-5

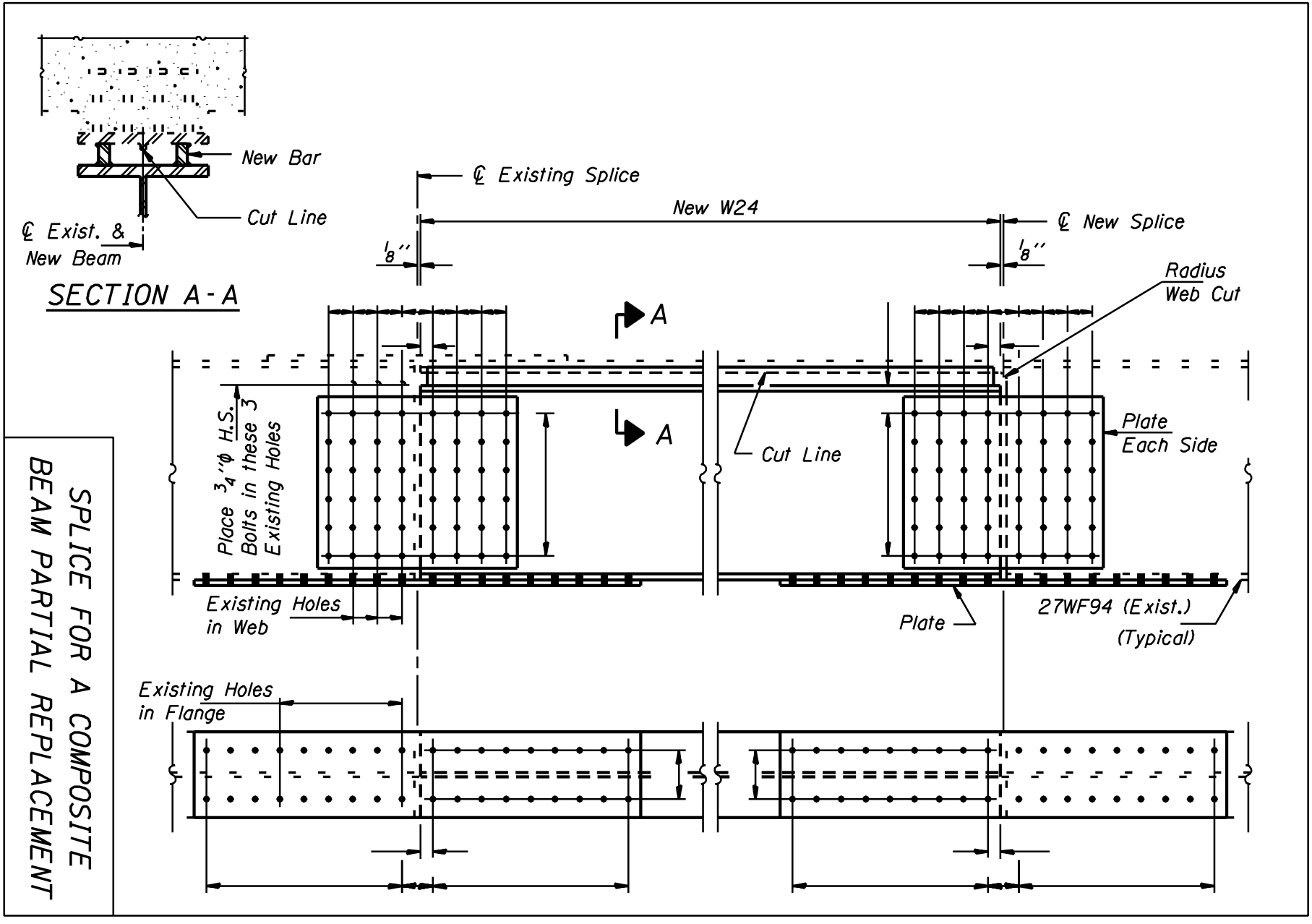

SPLICE FOR A COMPOSITE
BEAM PARTIAL REPLACEMENT

Figure 1.13.3-6

1.13.4 Top Flange to Deck Slab Repairs

After straightening or replacement, the top flange of the beam should be inspected to insure that it is in solid contact with the deck slab. Any gaps between the top flange of the beam and the deck slab should be injected with epoxy to provide positive contact with the deck slab. Also, damaged or missing concrete fillets encasing the top flange of noncomposite beams should be evaluated to determine the effect of the missing fillets on the strength of the beam's compression flange. Only when substantial lateral movement of the top flange is occurring should top flange restrainers be installed. The restrainers should be located in the area of missing concrete fillets to provide lateral restraint for the compression flange in positive moment areas as shown in Figure 1.13.4-1.

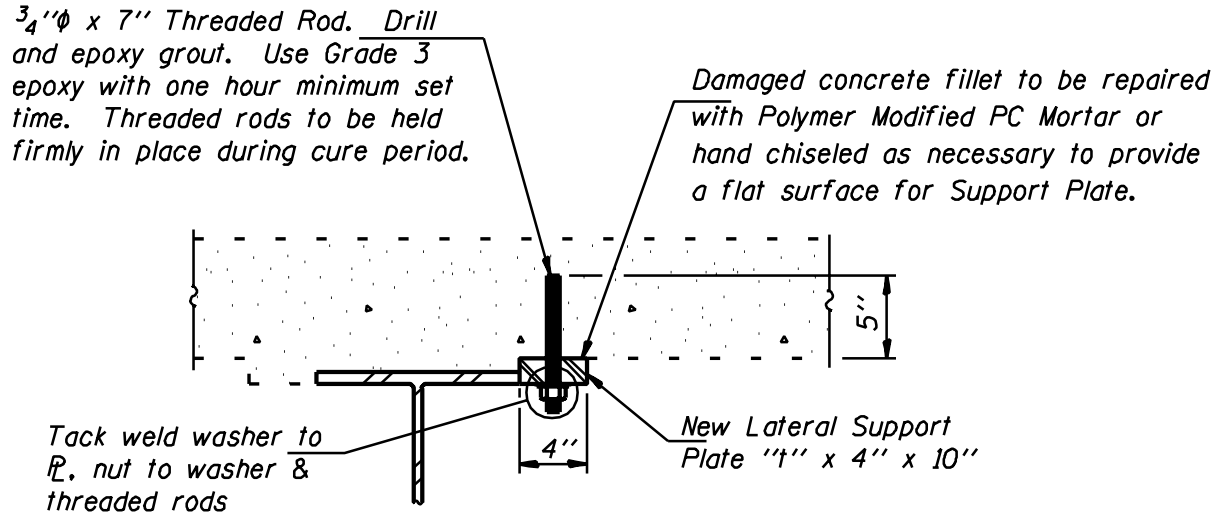

SECTION A-A

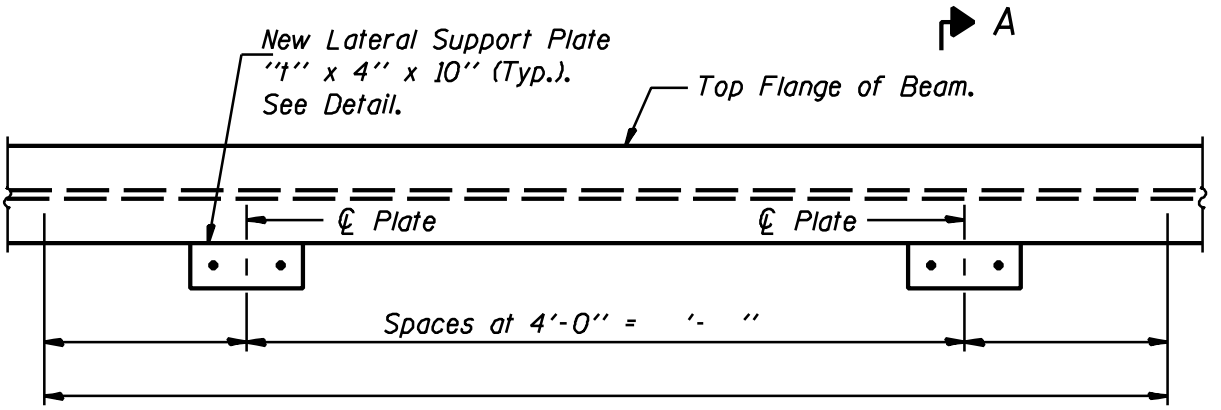

PARTIAL PLAN

DAMAGED BEAM FILLET REPAIR DETAIL

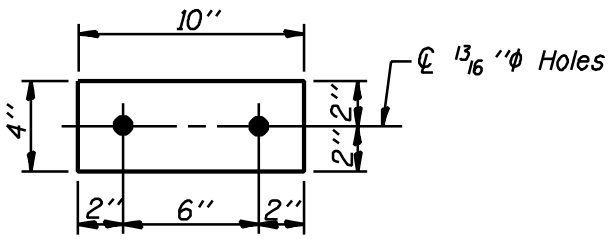

LATERAL SUPPORT PLATE DETAIL

PL "t" x 4" x 10"

No. Req'd. -

Plus additional as directed by the Engineer.

FILLET REPAIRS AND LAYOUT OF LOCATIONS

Figure 1.13.4-1

1.14 Impact Repairs - Concrete Beams

1.14.1 General

When concrete beams are struck and an area of concrete is removed from the beam by the impact, a decision must be made to repair or replace the member. Often a decision to replace a concrete member is based on the extent of the damage rather than the effect of the missing concrete on the strength of the member. Damage is usually located on the bottom of a member located over traffic. If the missing concrete is to be replaced, measures must be taken to insure that the concrete patch will be securely anchored in place to protect the strands and cannot eventually loosen and spall off.

1.14.2 Preloading

To insure that an area of repair concrete will remain in place, anchors should be installed in the existing beam and a preload should be applied to the structure during the repair and curing period. After the repair concrete has cured, the preload should be removed from the structure to effectively place the concrete repair in compression. The preload used should approximate the affect on the member of the passage of a maximum legally loaded vehicle crossing the structure. An analysis is required to determine:

1. the existing stresses in the damaged member.
2. the stresses in the damaged member during preloading.
3. the stresses in the repaired member after the preloading is removed.

If the analysis shows excessive stresses in the member during the necessary repair procedures, the member should be replaced. For the repair of precast prestressed concrete beams, the guidelines given in the National Cooperative Highway Research Program (NCHRP) Report 280 should be used.

The preload used during the repair of the damaged member can consist of loaded vehicles, stacked pig iron, concrete barriers or any load determined to approximate the affect of the maximum legally loaded vehicle on the member (provided the damaged beam is capable of carrying the preload).

1.14.3 Repair Procedures

The concrete patches should be keyed into the existing member by making shallow saw cuts along the perimeter of the proposed patch and removing the damaged concrete in such a way as to provide a square (unfeathered) edge along the perimeter of the replacement concrete. Contact with the existing prestressing strands must not occur during the sawcutting operations. Patching details associated with the repair of a PPC I-beam are shown in Figure 1.14.3-1.

If the damage is located on an interior beam which is protected from the elements and analysis shows that the missing concrete does not affect the strength of the member, replacement of the missing concrete may not be necessary. However, all exposed reinforcement bars and prestressing strands should be cleaned and coated with epoxy to prevent deterioration.

All cracks in the members should be located and repaired using epoxy injection. Precast prestressed concrete members should be preloaded prior to and during the curing period of the epoxy crack repairs. Again, the affect of the preload on the damaged member should be analyzed prior to its application.

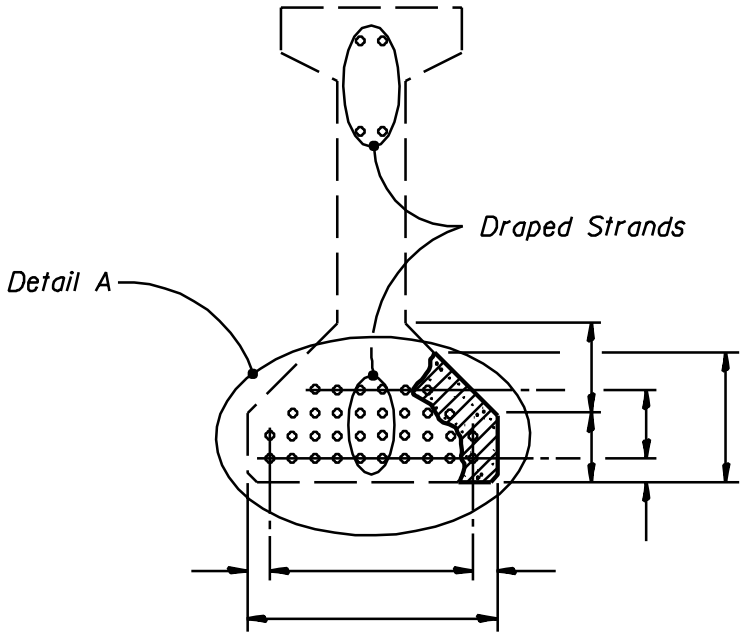

PATCHING DETAIL

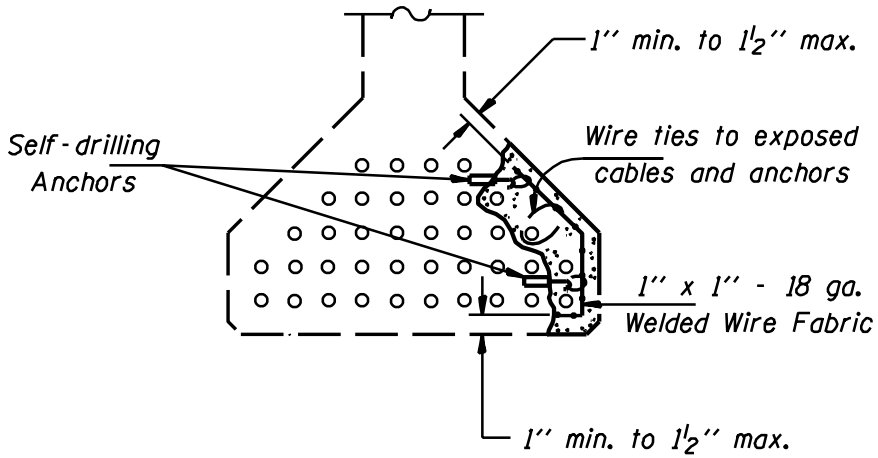

DETAIL A

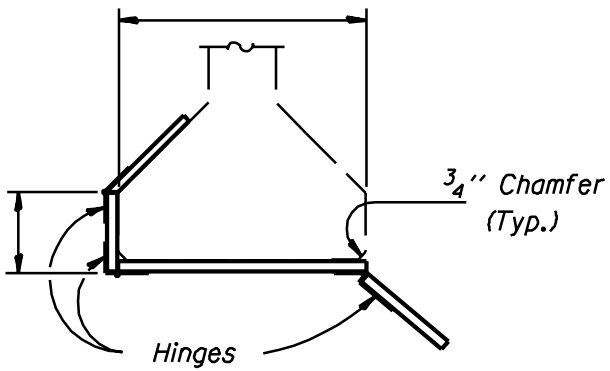

SUGGESTED FORM DETAIL

P.P.C. I BEAM
IMPACT REPAIR

Figure 1.14.3-1

1.15 Steel Superstructure Repairs

1.15.1 General

The major cause of the deterioration of steel superstructure elements is the exposure of the members to moisture and deicing agents. The types of deterioration most often encountered include:

1. section loss in beams, girders and diaphragms adjacent to unsealed or leaking expansion joints.
2. section loss in the bottom flange and lower web of beams and girders located beneath unextended deck drains.
3. section loss in stringers and floorbeams located near unsealed or defective expansion joints or deck relief joints.
4. section loss in truss members in the splash zone area and in areas prone to the collection of debris.

Although not as common as deterioration from exposure, steel members must occasionally be repaired to correct damage occurring to members during the construction operations associated with rehabilitation projects.

Repairs will often be required for a number of members located adjacent to different expansion joints or deck drains on the same structure. The length or extent of deterioration will vary from member to member and the type of repair required will be identical except for the length or depth dimensions of the repair. Rather than preparing an individual repair detail for each location, the number of repair details used should be mimimized whenever possible by using the details developed for the location with greatest extent of deterioration at the locations with less deterioration.

Severely deteriorated or damaged diaphragms should be completely replaced rather than repaired. The cost of the labor involved to repair a defective diaphragm is usually enough to make the complete replacement of the diaphragm the most economical choice. Replacement diaphragms should be detailed to minimize field installation difficulties by bolting the connection angles to the diaphragm and specifying oversized holes.

Locations where complete or severe loss of section has occurred should be repaired even when the load carrying capacity of the member has not been affected. The corrosion holes or areas of severe section loss should be repaired by placing new steel plates on both sides of the deteriorated member to prevent further deterioration. The plates should be a minimum of 3/8 inch in thickness and the spacing of the bolts used to attach the plates should meet the AASHTO requirements for stitching and sealing.

1.15.2 Beam and Girder Repairs

The girder end retrofit shown for the repair of cracks over frozen bearings in the Fatigue chapter of this Section can also be used to repair ends of members which have experienced severe section loss in the area of their bottom flange and lower web. When the deterioration is restricted to the upper area of the web near the attachments to the diaphragms, plates can be added to the web and the diaphragms can be adjusted or replaced if necessary as shown in Figure 1.15.2-1. When the section loss extends into the lower web and bottom flange area of the member, repairs can be made using plates and angles as shown in Figure 1.15.2-2 and Figure 1.15.2-3 or channel sections as shown in Figure 1.15.2-4.

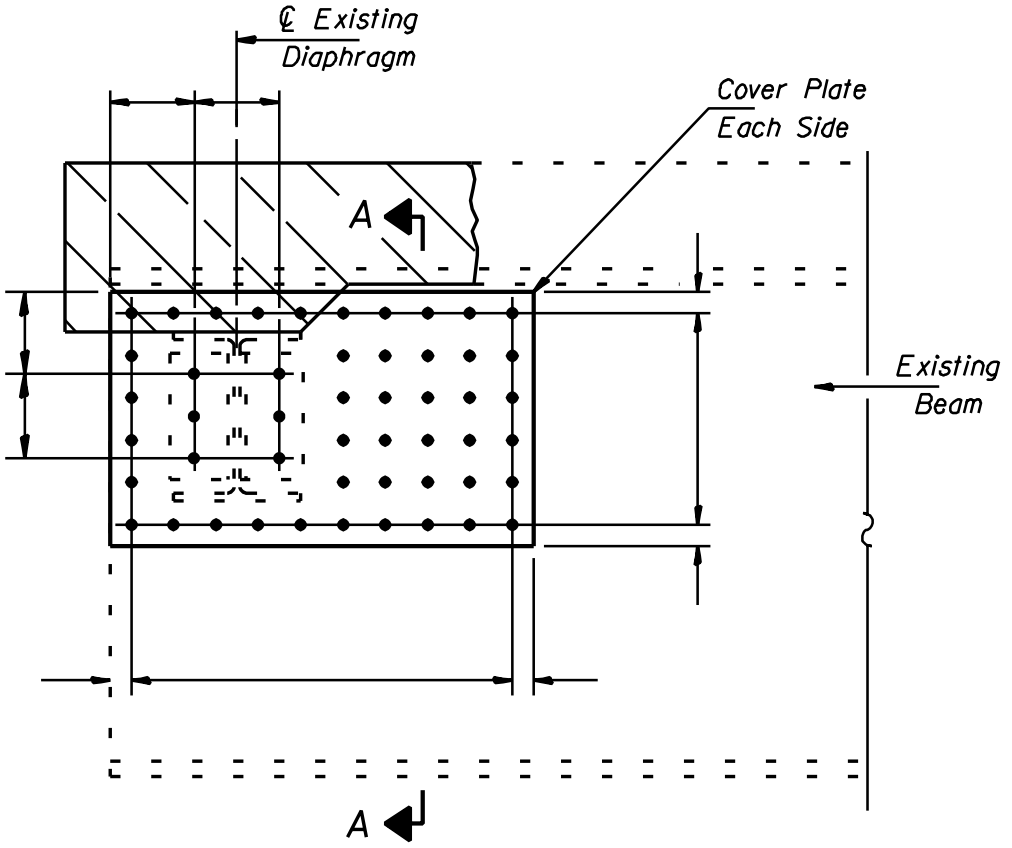

END ELEVATION

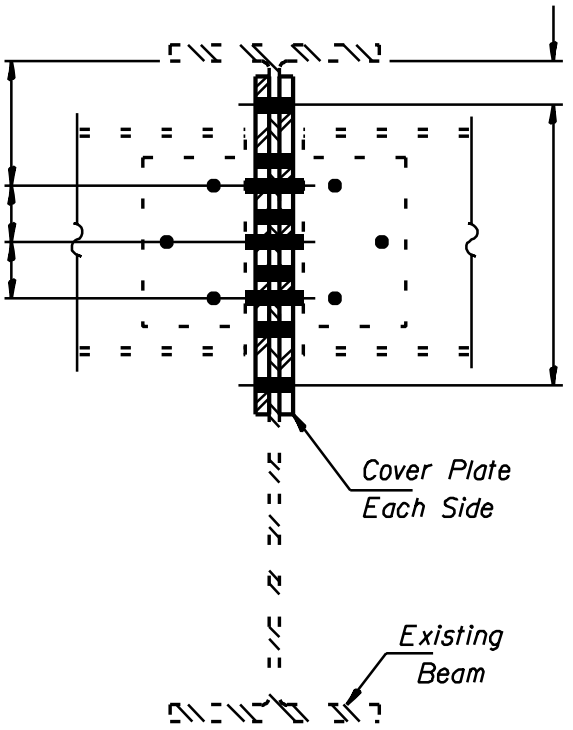

SECTION A-A

Notes: Existing Diaphragms shall be shortened to accomodate Beam repairs.
Hatched area indicates Concrete Removal and Replacement.

END OF BEAM
REPAIR DETAIL

Figure 1.15.2-1

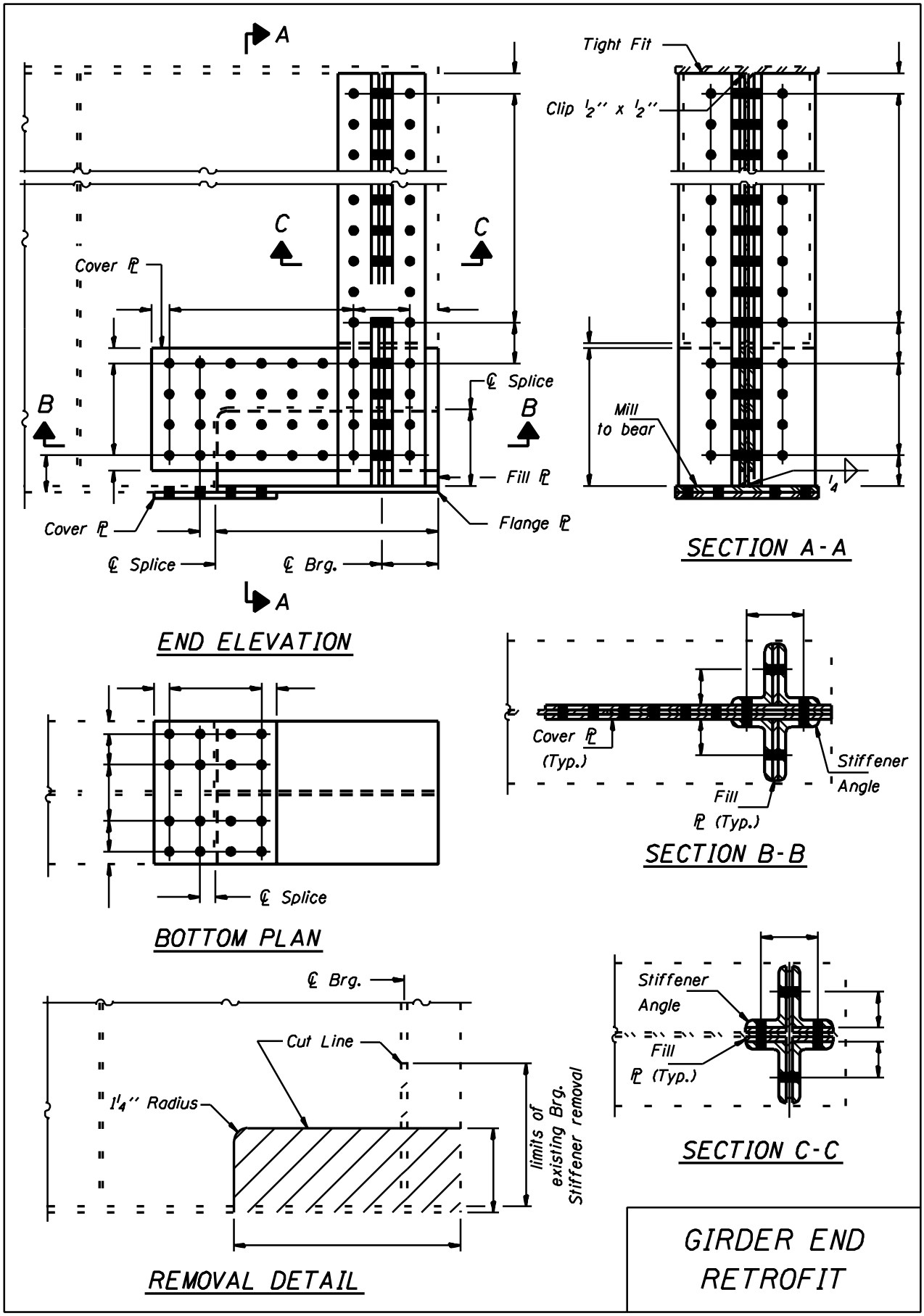

Figure 1.15.2-2

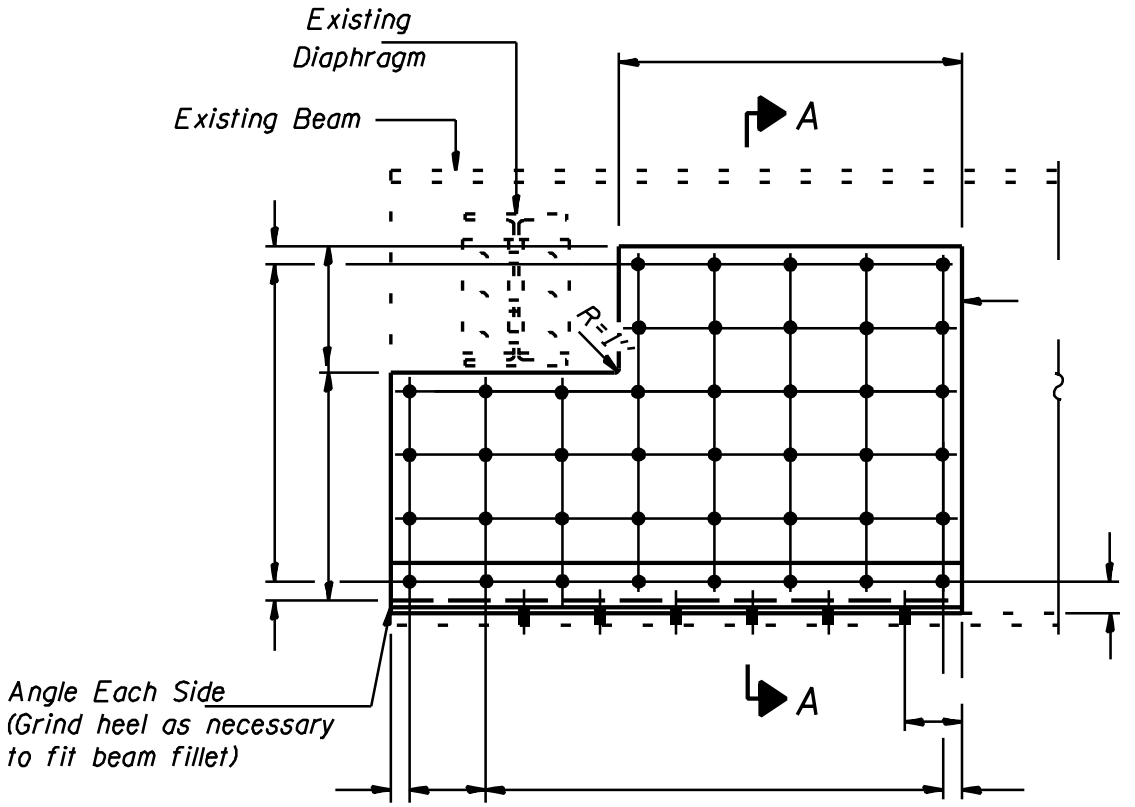

BEAM WEB REPAIR DETAIL

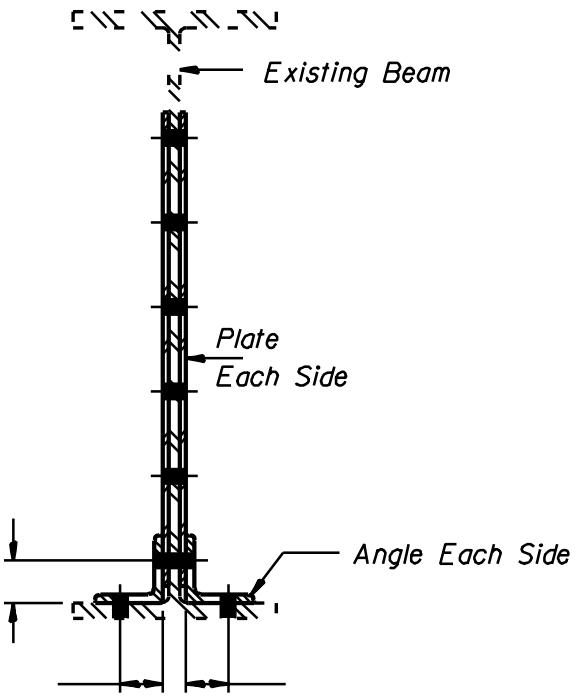

SECTION A-A

END OF BEAM
REPAIR DETAIL

Figure 1.15.2-3

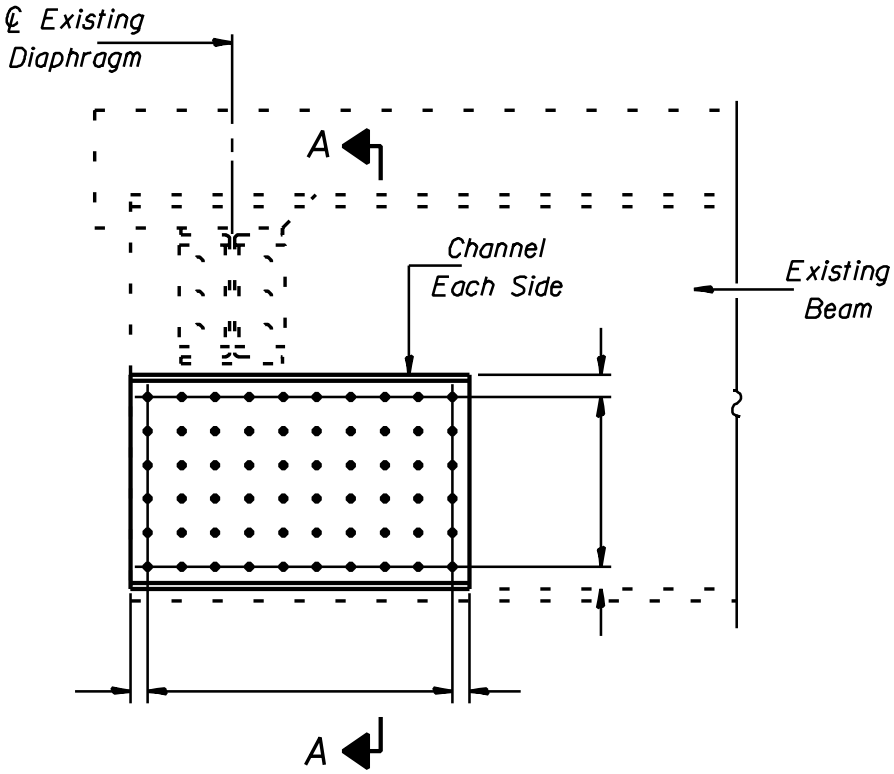

END ELEVATION

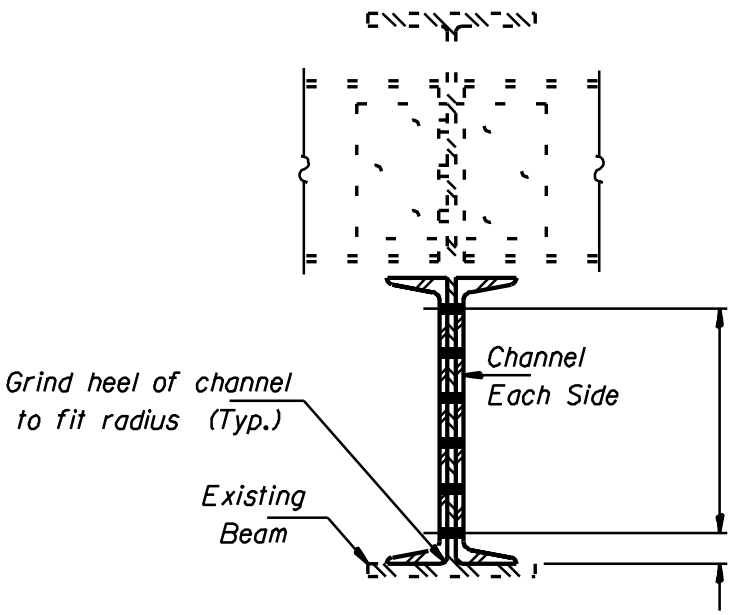

SECTION A-A

END OF BEAM
REPAIR DETAIL

Figure 1.15.2-4

The section loss, which occurrs in the bottom flange and lower web of a member located beneath a deck drain, should be measured to determine the affect of the section loss on the load carrying capacity of the member. When the deterioration is located on a tension flange, the affected area should be ground parallel to the primary stress in the beam to remove sharp corners and deep rifts in the material. The grinding should be tapered into the undamaged areas at a 3:1 slope similar to that shown elsewhere in this Section for grinding impact gouges on steel beams. When load carrying capacity must be restored, splice plates should be placed accross the deteriorated portion of the web and bottom flange, as shown in Figure 1.15.2-5. Holes in the lower portion of the web should be repaired by placing plates on both sides of the web to prevent further deterioration. Whenever possible, the drains adjacent to the problem area should be eliminated or extended to discharge below the member to prevent recurrence of the deterioration.

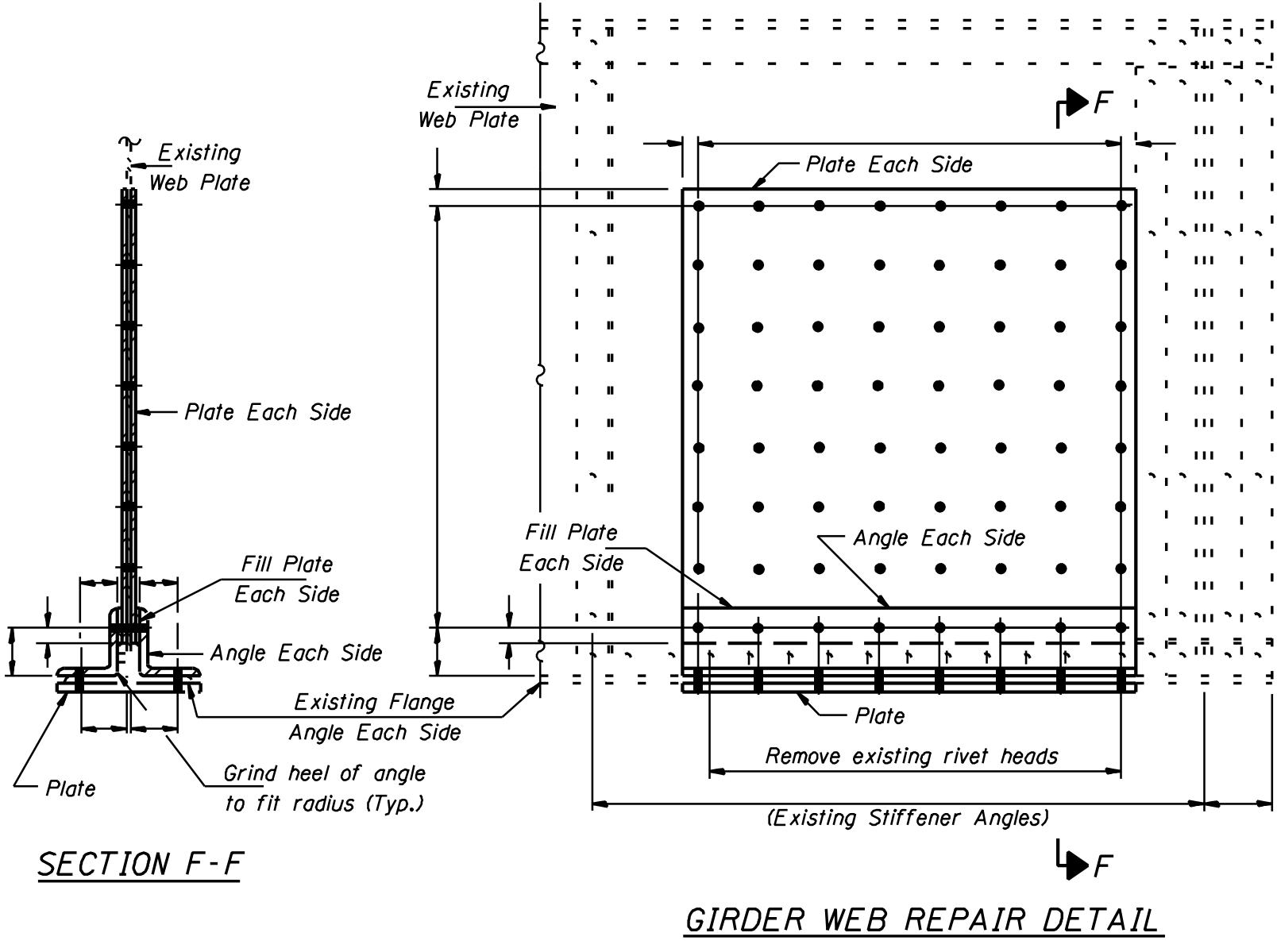

BUILT-UP FLOOR
BEAM REPAIR DETAIL

Figure 1.15.2-5

1.15.3 Stringer and Floorbeam Repairs

Severe section loss in the ends of stringers at expansion/relief joints can be repaired by attaching a channel section to each side of the stringer as shown in Figure 1.15.3-1 and Figure 1.15.3-2. The bottom flanges of the channel sections should be placed tightly against the bottom flange of the deteriorated stringer when the stringer is supported on a seat bracket and is not connected to the floorbeam by web clip angles. Steel plates and angle sections can also be used as shown in Figure 1.15.3-3 for a "slip type" connection when the deterioration is limited to the lower web area and bottom flange of the existing stringer.

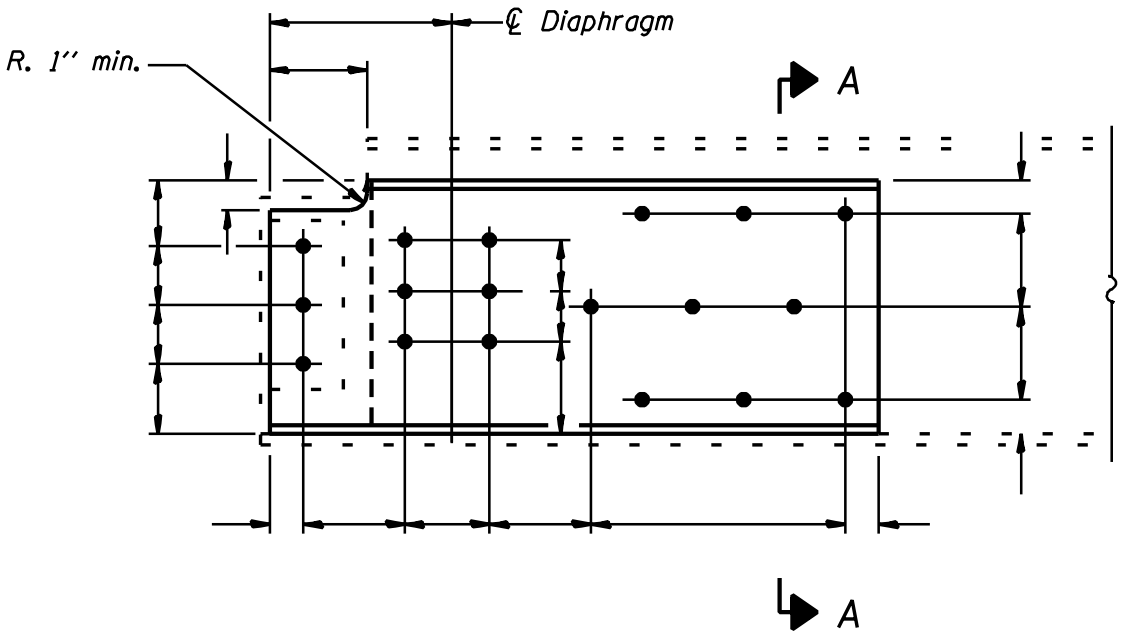

END ELEVATION

Note: Existing Diaphragm shall be shortened to accomodate stringer repairs.

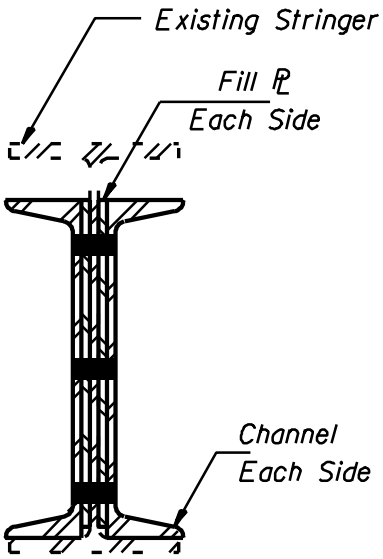

SECTION A-A

END OF STRINGER REPAIR DETAIL

Figure 1.15.3-1

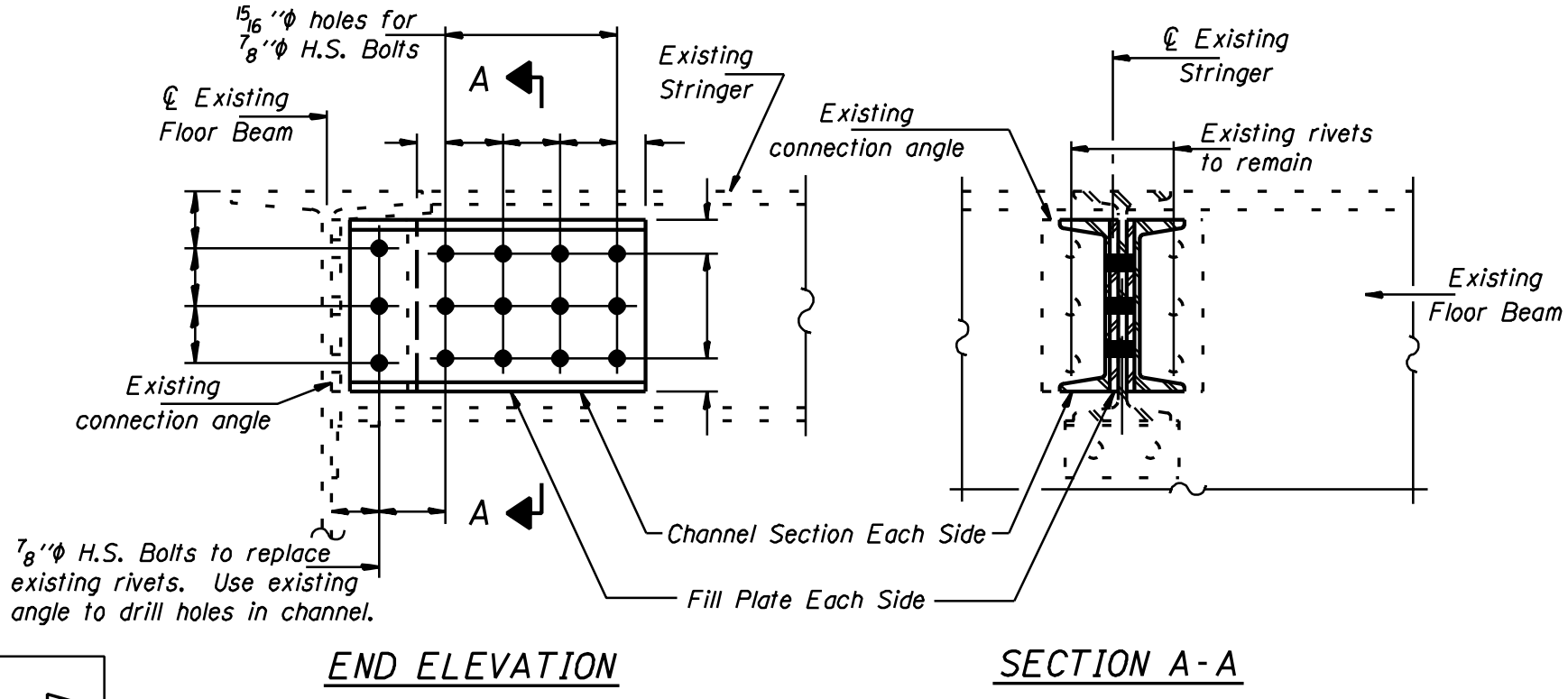

Notes: Holes in the stringer web are to be drilled using the new reinforcement channel as a template, except as noted

END OF STRINGER
REPAIR DETAIL

Figure 1.15.3-2

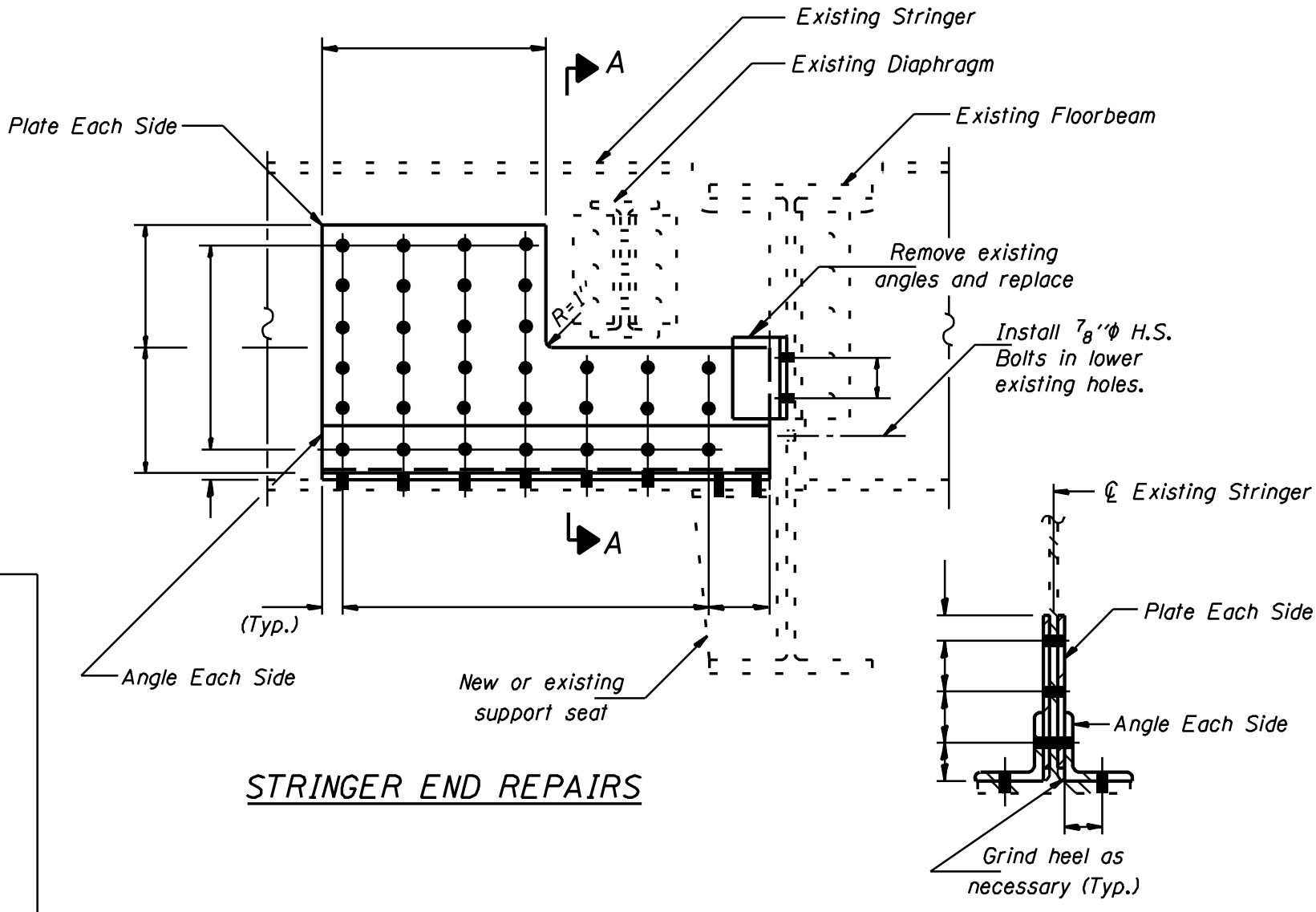

STRINGER END REPAIR

Figure 1.15.3-3

Deterioration in the webs and flanges of floorbeams should be repaired in the manner previously described for the repair of beam and girder deterioration adjacent to deck drains. Figure 1.15.3-4 shows details used for the repair of an existing floorbeam constructed as a built-up section.

Deterioration is commonly found at the locations where the floorbeams are connected to a truss. When the structural capacity of the floorbeam has been affected by excessive section loss in the floorbeam web at the angles connecting the floorbeam to the truss, plates may be placed at the connection to restore the lost capacity as shown in Figure 1.15.3-5. When cracks develop between the top flange and web of the floorbeam in the area of the floorbeam to truss connection, angles can be installed as shown in Figure 1.15.3-6.

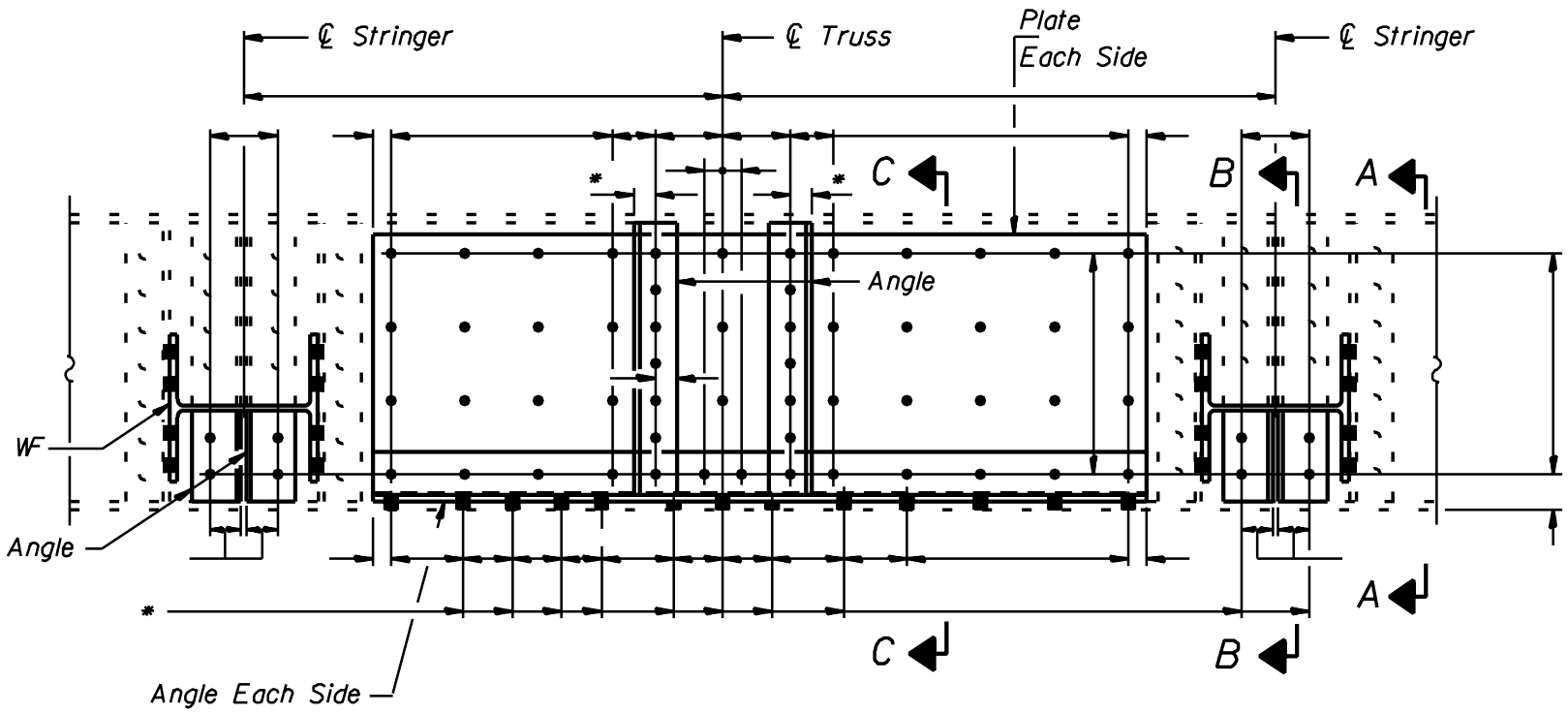

FLOORBEAM REPAIR

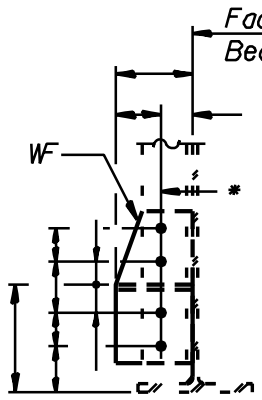

SECTION A-A

* Match existing holes.

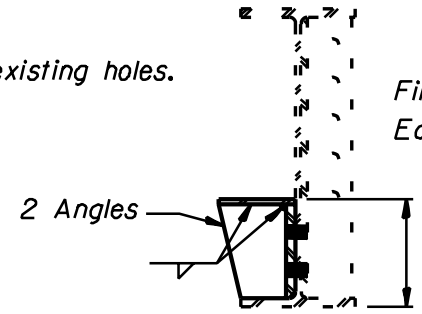

SECTION B-B

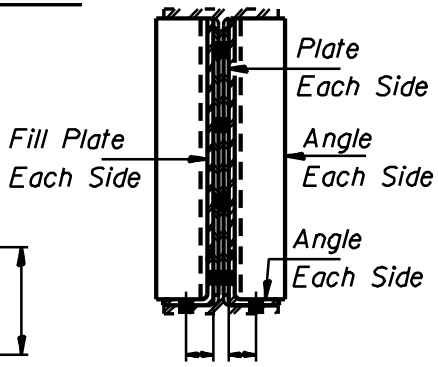

SECTION C-C

FLOORBEAM REPAIR

Figure 1.15.3-4

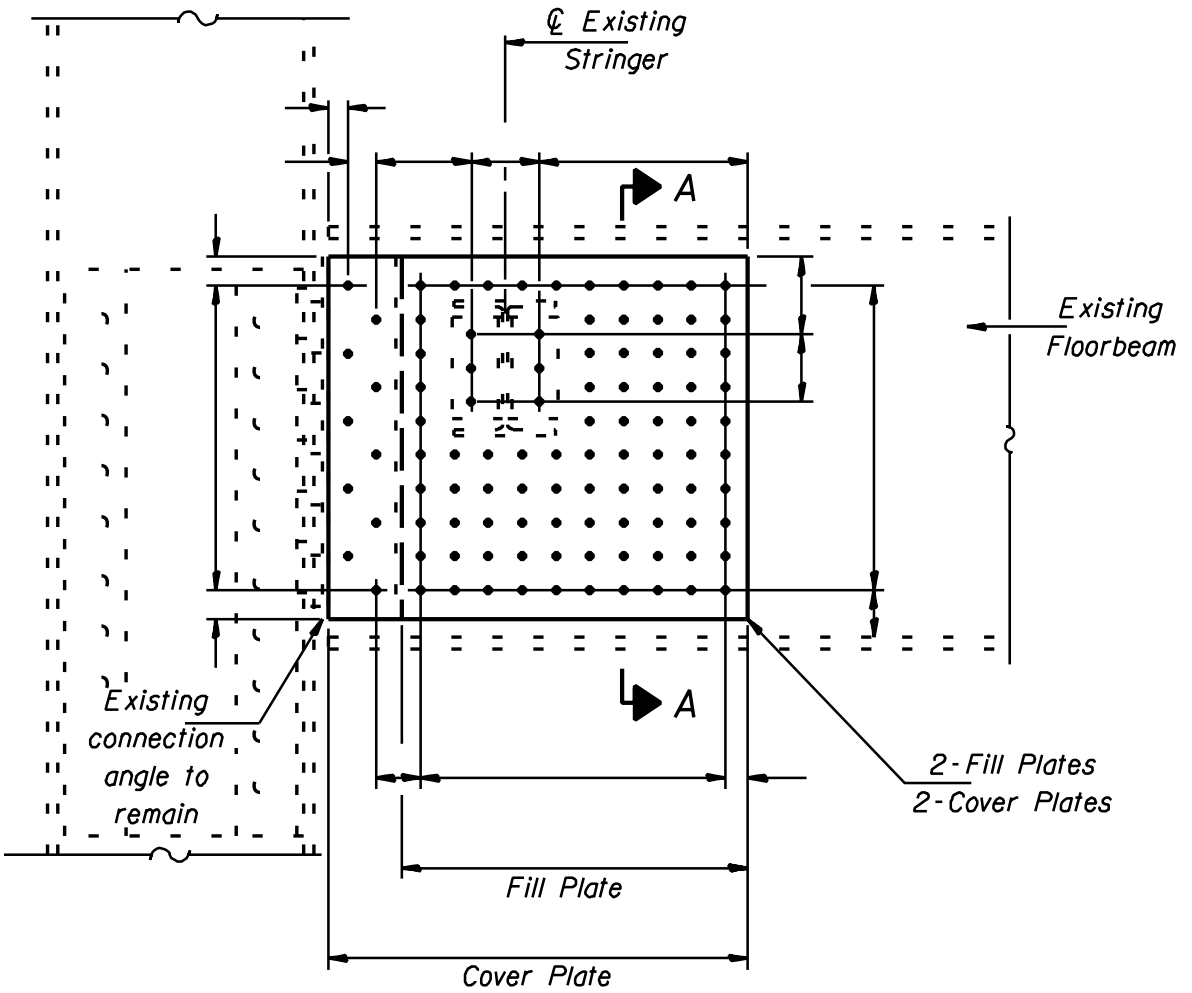

END ELEVATION

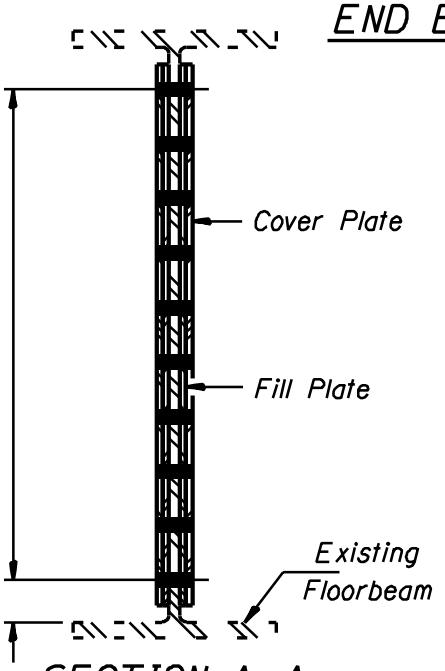

SECTION A-A

Note: Existing Stringer shall be shortened to accomodate Floor Beam repairs.

FLOORBEAM WEB REPAIR

Figure 1.15.3-5

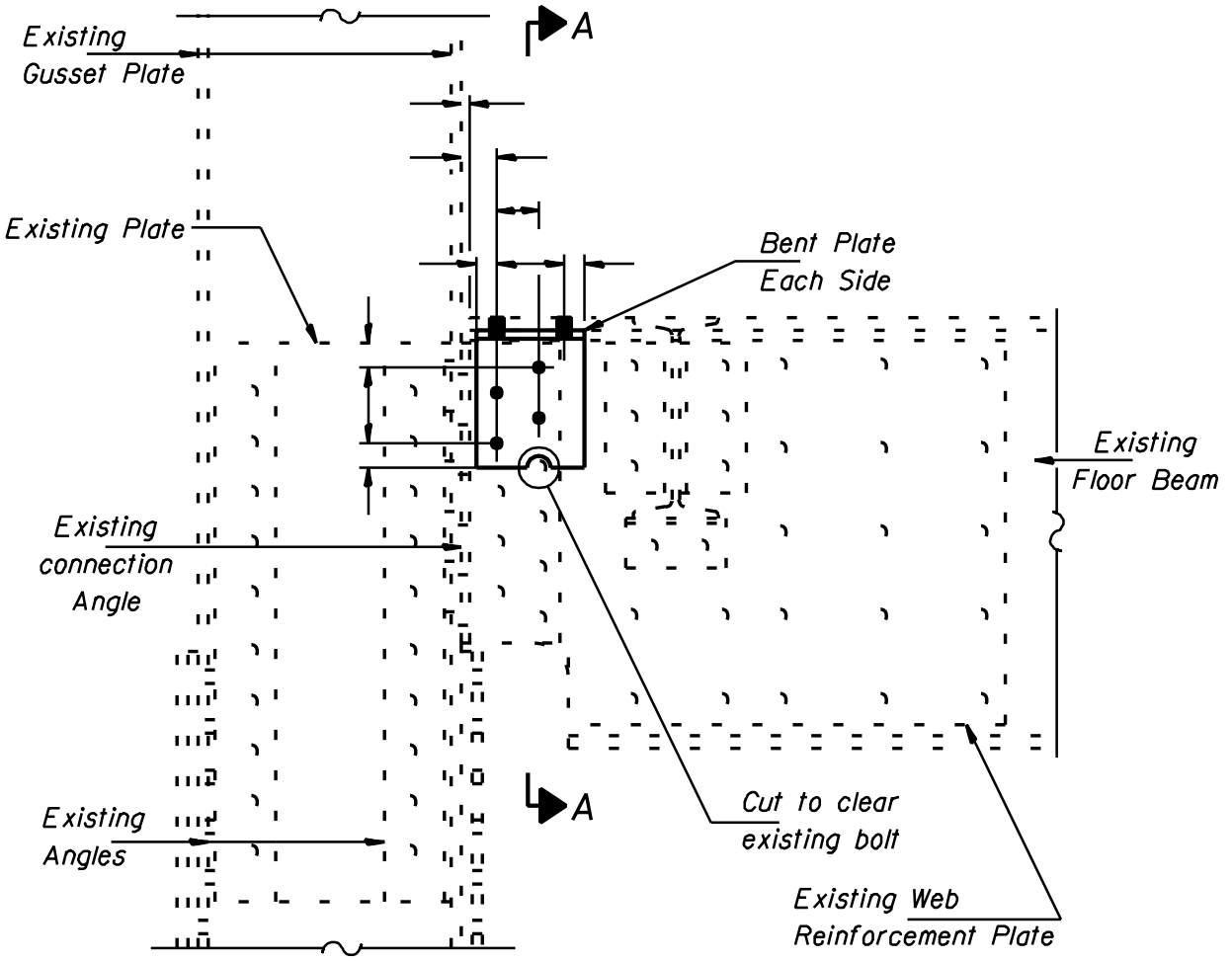

FLOORBEAM END PLATE

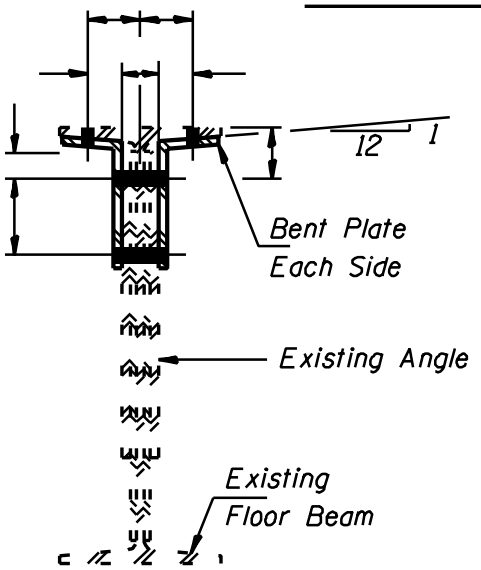

SECTION A-A

FLOORBEAM REPAIR

Figure 1.15.3-6

1.15.4 Construction Damage

There are many types of damage which can occur during construction. A new beam or girder can be dropped during erection, a piece of construction equipment can strike a portion of the structure which has already been constructed, or the beams can be damaged by equipment being used to remove an existing concrete deck. Damage due to impacts can be analyzed and repaired as described elsewhere in this Section for impact repairs. This Section will deal with the repair of steel beam flanges damaged by deck removal operations.

Plans for projects where portions of the existing deck will be removed should include a note instructing the contractor to mark the top surface of the existing deck to identify the location and limits of the top flanges of the beams prior to the commencement of deck removal operations. When a beam is damaged by deck removal operations, it is the contractor's responsibility to repair the damage at his/her own expense. The contractor will be responsible for retaining a licensed structural engineer (State of Illinois) to analyze the effect of the damage on the structure, to make repair recommendations and to prepare repair details. The structural engineer's analysis, recommendations and repair details will be submitted to the Bureau of Bridges and Structures for review and concurrence prior to the implementation of repairs.

When the flange of a beam has been nicked, gouged or cut during the removal of the existing deck, each damaged location must be analyzed to determine the effect of the damage on the load carrying capacity of the structure and on the serviceability of the structure (fatigue life). The damaged area should be ground parallel to the primary stress to remove the defects and to provide a 3:1 taper from the bottom of the defect to the undamaged steel surface. The cross sectional area remaining after grinding operations should be analyzed to determine the maximum stresses and stress range expected to occur at the damaged location if left unrepaired. Damaged locations where the stresses or stress range are determined to be unacceptable, must be strengthened by placing splice plates across the damaged area to return the damaged beam to its original load carrying capacity. The grinding details and the flange strengthening details shown in the Impact Repairs - Steel Beams chapter of this Section can be applied to the repair of nicked, gouged or saw cut flanges.

1.16 Concrete Superstructure Repairs

1.16.1 General

The procedures described elsewhere in this Section, for the repair of impact damage on concrete beams, can also be applied to the repair of beams which have experienced severe long term deterioration. The repair concrete should be securely anchored to the existing beam. Shallow unanchored mortar repairs should be avoided, especially over areas of vehicular or pedestrian traffic. When deterioration has exposed the existing reinforcement bars but does not extend to below the bars, the exposed reinforcement bars can be coated with epoxy in lieu of a thin mortar repair being applied to the deteriorated area to cover the exposed reinforcement.

1.16.2 Beam End Repairs

The repair of deteriorated beam ends is among the most common repair procedures performed during maintenance contracts. When the deterioration extends into the concrete directly over the bearings, the beams must be temporarily supported during the repair operations. The deteriorated concrete areas should then be repaired using formed concrete repairs as described for the repair of substructures elsewhere in this Repair Section.

1.16.3 PPC Deck Beam Repairs - General

Among the most common repairs necessary for the maintenance of PPC deck beams are:

1. the replacement of the wearing surface.
2. the repair of keyways
3. the repair of deteriorated concrete and the protection of exposed reinforcement and strands.
4. the adjustment of bearing pads.

5. the repair of grouted dowel rod holes.
6. the repair of grouted joints at the fixed beam ends.

Plans for projects including these repairs, should contain a plan view of the superstructure showing the location of all keyways, deteriorated beam areas, expansion joints and fixed joints. The locations to be repaired should be identified on the plan view. Special provisions for the repair procedures listed above can be obtained by contacting the Structural Services Section of the Bureau of Bridges and Structures.

The existing wearing surface may be removed and replaced as described for overlays elsewhere in this Section. The repairs listed above must be included with all overlay projects on PPC deck beams when deterioration is present.

After the wearing surface and waterproofing have been removed from deck beams, any existing unplugged fabrication vent holes in the top of the beams should be located and sealed with epoxy to prevent water from entering the voids cast inside the beams. Also, during the inspection of PPC deck beams, the existing drain holes extending through the bottom of the beams into the voids inside the beam should be probed to insure that they are not clogged and that water is not accumulating in the voids.

1.16.4 Keyway Repairs

The grouted keyways between the individual beams, which combine to form the bridge superstructure, are essential for the lateral distribution of load during the application of live loads. If the keyways adjacent to a beam are severely deteriorated, that beam must carry a portion of the live load significantly greater than the amount of liveload the beam was designed to carry. When this condition exists, the Bureau of Bridges and Structures should be contacted to determine if a load restriction must be placed on the structure until repairs can be made.

Keyways are repaired by removing all deteriorated grout from the keyway and replacing it with an epoxy grout. In areas of the keyway where the existing grout is cracked but otherwise sound, the cracks in the grout should be filled with epoxy. The epoxy grouting and crack sealing should not be done until all PPC deck beam repairs, bearing pad adjustments and dowel rod hole repairs have been completed.

When the edges of the beam forming the keyway have deteriorated to the point where they cannot provide the geometric shape necessary to contain the keyway grout, consideration must be given to beam replacement or the installation of a mechanical keyway device. A device similar to the one shown in the Prestressed Concrete Manual for use during the staged construction of a PPC deck beam bridge can be used. The device details should be modified as shown in Figure 1.16.4-1. When the superstructure is over a roadway or railroad, the affect of the mechanical devices on vertical clearance must be considered. Also, since the devices will interfere with the placement of waterproofing membrane and may loosen with time, they should only be installed to avoid total beam replacement on structures scheduled for replacement.

When the keyway deterioration is due to the lateral movement of the beams relative to one another, side retainers should be installed adjacent to the facia beams to prevent further movement. The Prestressed Concrete Manual provides details for side retainers which can be installed adjacent to the beams when adequate bearing seat area is available.

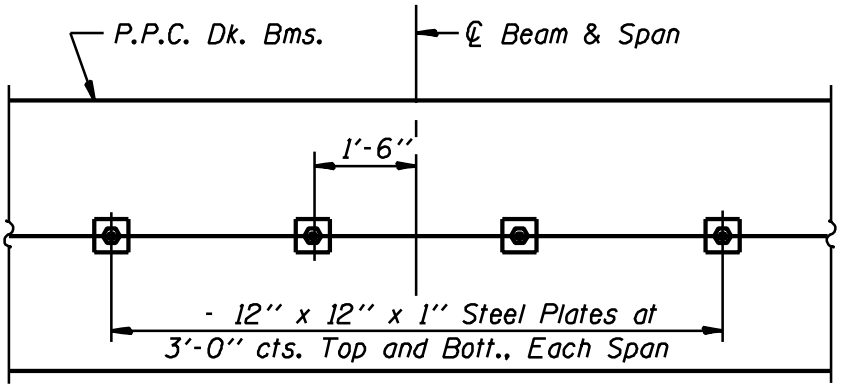

PLAN

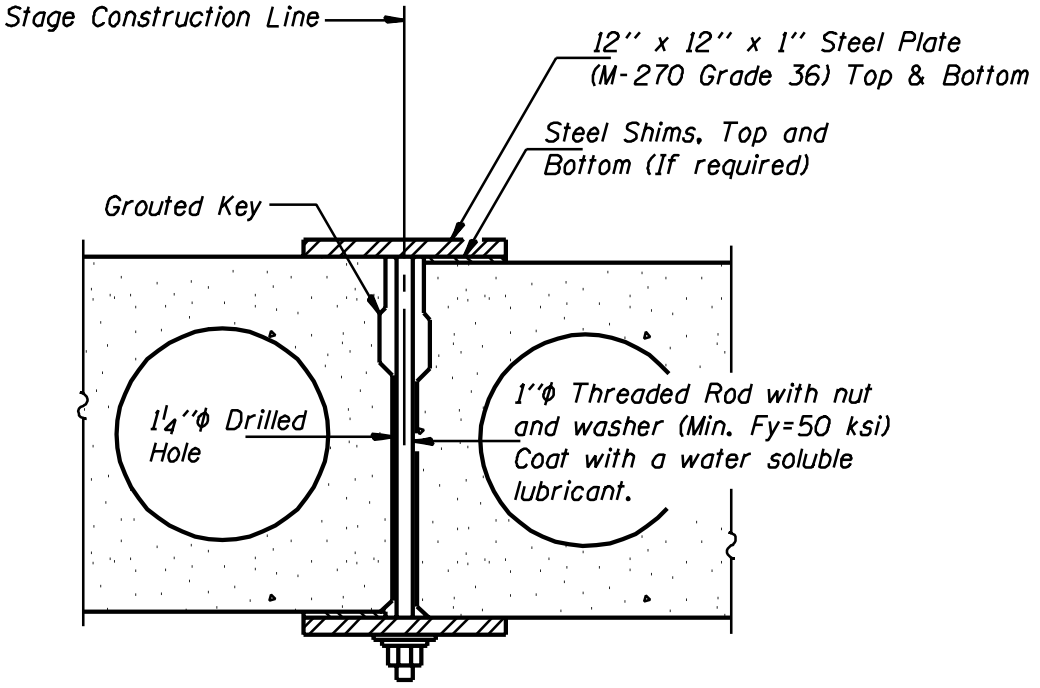

SECTION

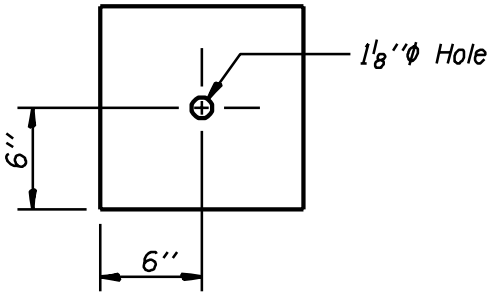

BOTTOM CLAMPING PLATE

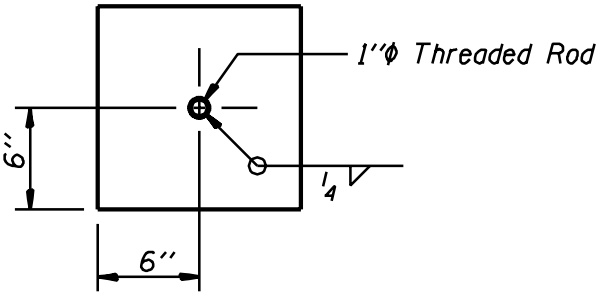

TOP CLAMPING PLATE

SHEAR KEY CLAMPING DEVICE
FOR PPC DECK BEAMS

Figure 1.16.4-1

1.16.5 Bearing Pad Adjustment

The bearing pads located under the ends of the PPC deck beams must be inspected to identify areas where uniform bearing of the beams on the pads does not exist. These areas will be prone to rocking when liveload is applied to the structure and will contribute to the accelerated deterioration of the keyways between the beams. Uniform bearing should be established by inserting shims under the beam ends where rocking is occurring. At fixed bearings, where the ends of the beams are held in place by dowel rods, uniform bearing can be provided by the placement of epoxy grout between the bottom of the beams and the bearing seat in lieu of furnishing shims.

1.16.6 Dowel Hole and Grout Joint Repairs

Deterioration of the grout in the dowel rod holes and the grout joints at the ends of the beams can occur due to the rocking of poorly supported beam ends or due to the accumulation of moisture under the overlay at the ends of the beams. After the existing overlay has been removed, all deteriorated grout should be removed from the dowel rod holes and grouted joints. Cracks in existing grout to remain in the dowel holes should be sealed with epoxy. Epoxy grout should then be used to replace the removed deteriorated grout.

1.16.7 PPC Deck Beam Repair and Replacement

PPC deck beams should be repaired as described earlier in the "General" portion of this chapter. When the concrete deterioration extends into the voids inside the deck beams or severed prestressing strands are present, the Bureau of Bridges and Structures should be contacted to determine if a load restriction must be placed on the structure and if the replacement of the beam is necessary.

When a PPC deck beam must be replaced, the replacement beam's load carrying capacity must not be less than the capacity of the existing beams remaining in place. The number and size of the prestressing strands placed in the replacement beam should provide the required capacity and should conform with current design and fabrication practices. When replacing an interior beam, the width dimension of the replacement beam should be reduced a maximum of 1/2 inch to facilitate the placement of the new beam between the existing beams. Whenever possible, transverse tie assemblies should be reinstalled. A modified tie coupler for use with a beam replacement is shown in Figure 1.16.7-1. It is not always possible to reinstall the transverse ties on structures with large skews and staggered tie assemblies. When transverse ties cannot be reinstalled, side retainers should be installed adjacent to the facia beams at the ends of the beams which are not connected to the substructure with dowel rods and are not tied together by expansion joint steel.

1.16.8 R.C. Deck Girder Replacement

The primary cause of deterioration in R.C. deck girders is exposure to deicing agents. Compounding this situation are the lack of anchorage and the debonding of the existing main tension reinforcement in the bottom of many R.C. deck girders. When deterioration requires that a girder be replaced, the girder can be replaced in-kind or a precast prestressed concrete deck beam can used as shown in Figure 1.16.8-1. The use of the precast beam will avoid many of the problems associated with forming and temporarily supporting a cast in place R.C. deck girder.

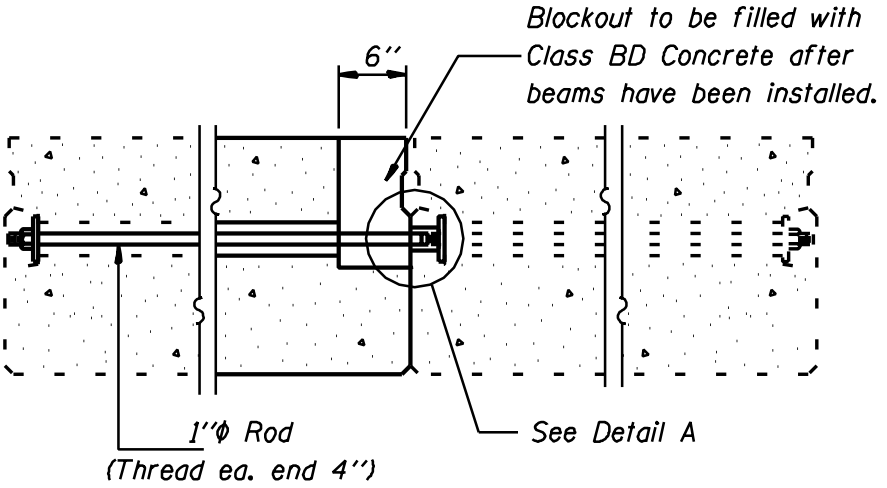

TRANSVERSE TIE ASSEMBLY

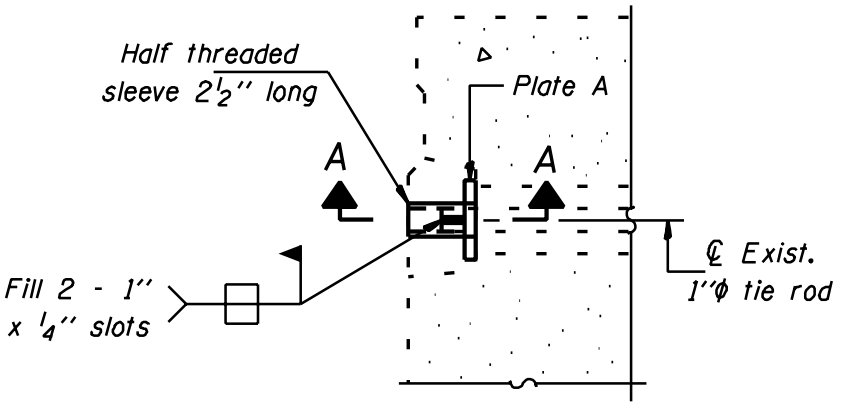

DETAIL A

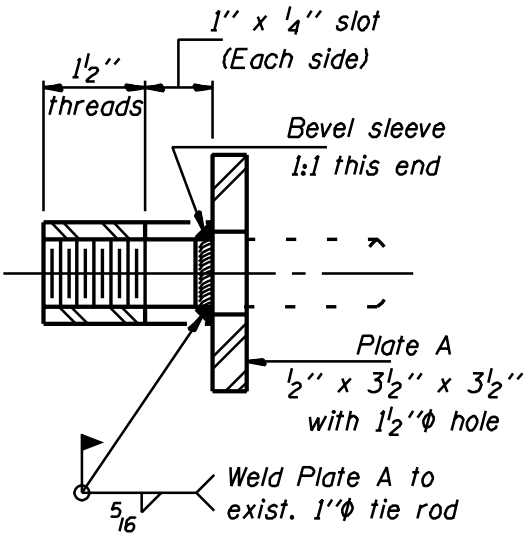

SECTION A-A

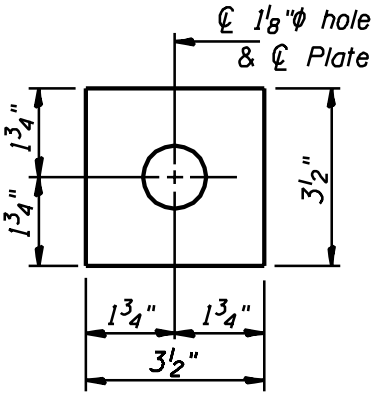

PLATE A

MODIFIED TIE COUPLER FOR TRANSVERSE TIE ASSEMBLY

Figure 1.16.7-1

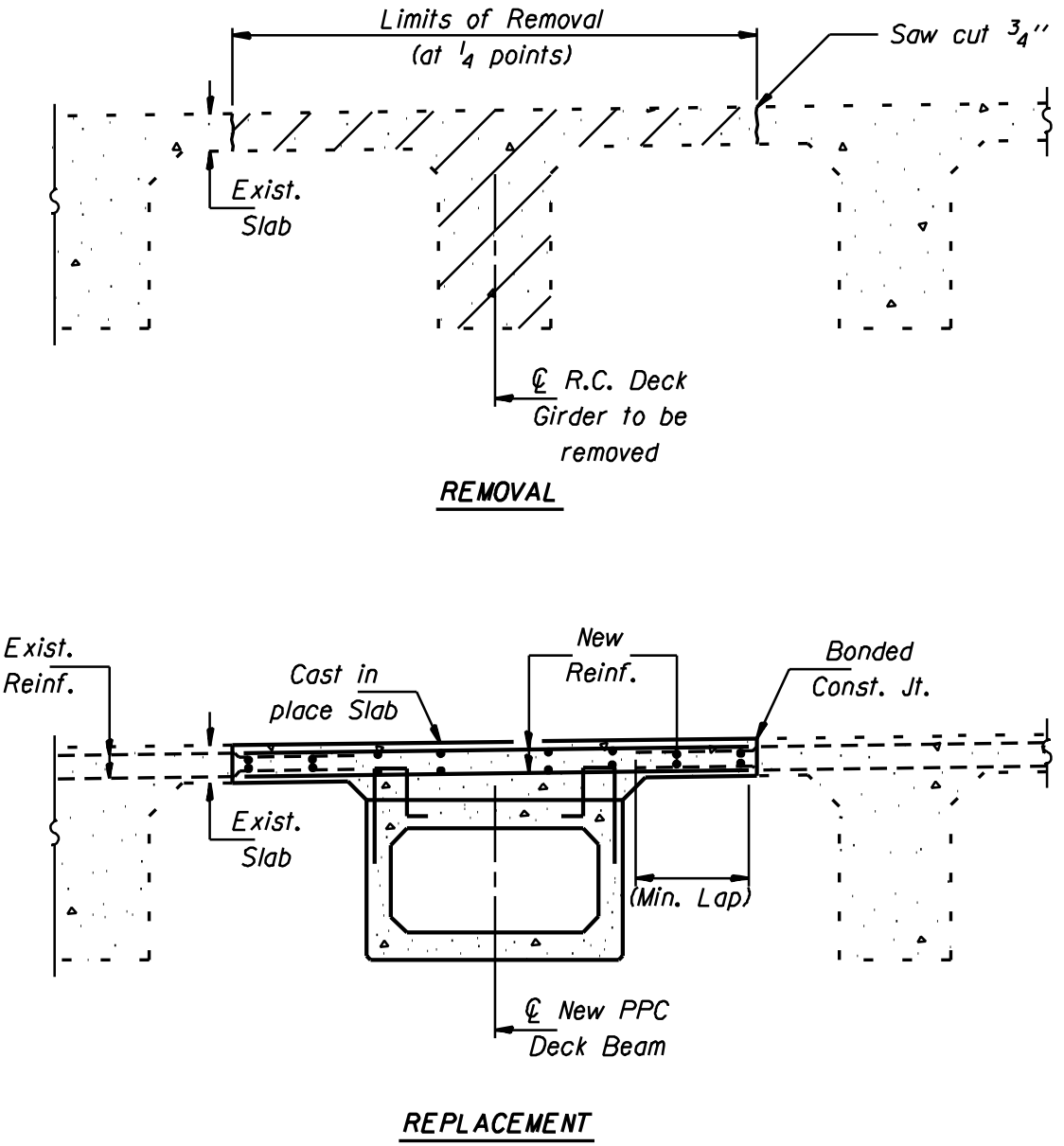

SECTION NEAR MIDSPAN

R.C. GIRDER REPLACEMENT

Figure 1.16.8-1

1.17 Substructure Repairs

1.17.1 General

The repair of cracks and areas of deteriorated concrete are the most common types of substructure repairs included in maintenance repair plans. The plans must contain information identifying the locations to be repaired. The information should consist of views of the top, faces and sides of the substructure showing the approximate size and location of all cracks and deteriorated concrete areas as shown is Figure 1.17.1-1. Figure 1.17.1-2 shows “Guidelines for the Selection of Substructure Repair Methods”.

When large cracks or extensive areas of deteriorated concrete are present, an investigation should be performed to determine the cause of the cracking or deterioration. The repair plans should include measures to eliminate the cause of the problems. In some cases, the corrective measures required to avoid the recurrence of the deterioration will simply call for the replacement of a leaking expansion joint or the elimination or extension of nearby deck drains.

Maintenance repair plans are occasionally required for the replacement of failed retaining walls and the stabilization of abutment walls. These type of repairs require analysis and investigation to identify the cause of the wall failure or movement in order to develop a solution.

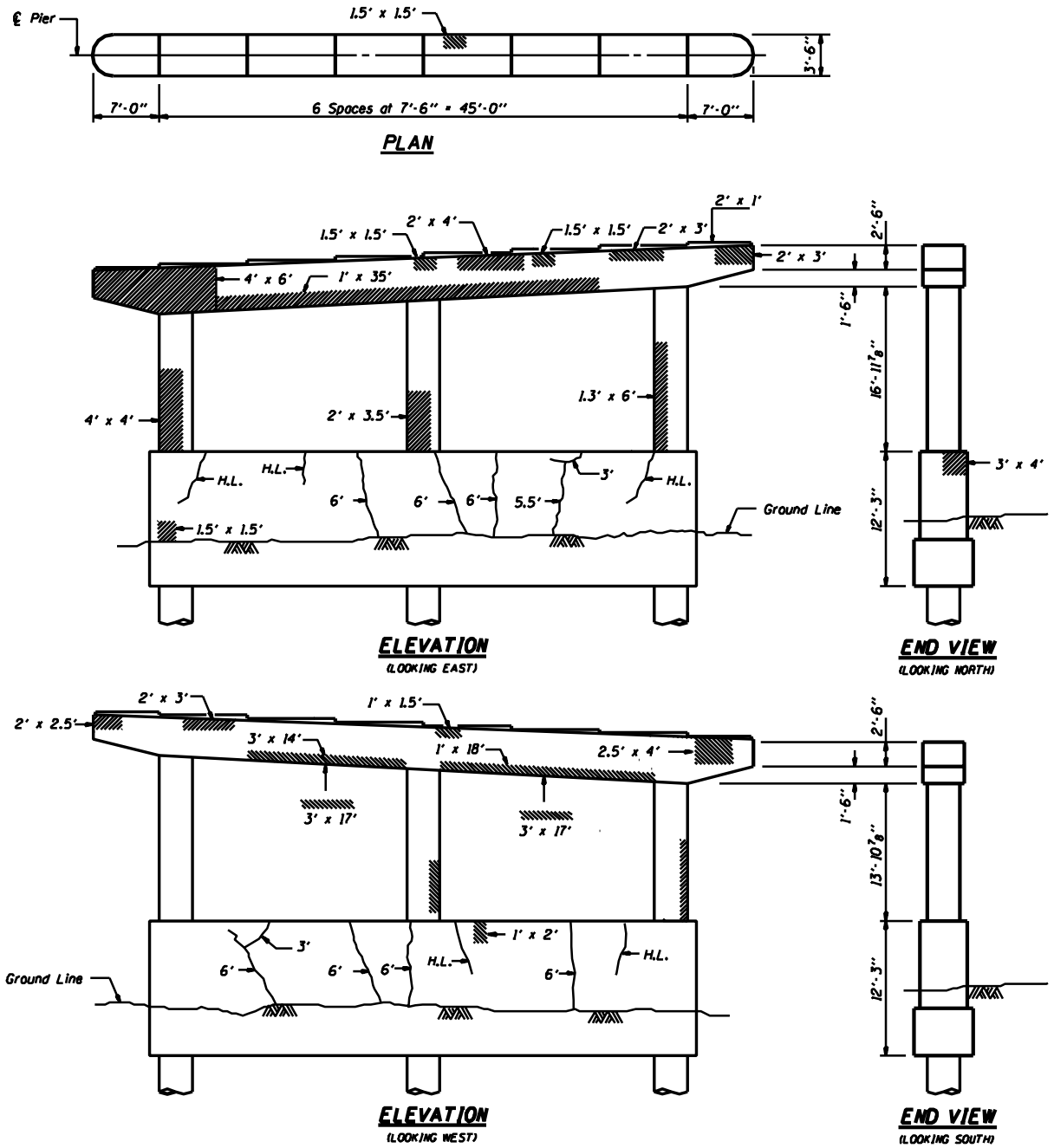

LEGEND

Formed Concrete Repair
Depth equal to or less than 5"

6' — Epoxy Crack Sealing

H.L. — Hairline Crack - Not to be sealed

Note: Crack widths are 1/8" ± 1/16" unless otherwise noted.

PIER REPAIR DETAILS

Figure 1.17.1-1

Substructure Repair Type	Project Quantity	Repair Location	Limits of Repair	Aesthetic Requirements / Limitations / Other Comments
Formed Concrete Repair (FCR)	Recommended method for 10 ft^2 to 100 ft^2. Alternate with high performance shotcrete for ≥ 100 ft^2.	Any location except overhead	Generally <5 in. in depth. If depth >8 in., use anchors. Max. 12 in. removal depth allowed without Bridge Office evaluation.	No restriction for aesthetics. Note: If repair of patch boundaries is necessary, ensure proper placement of repair material to avoid cracking and delamination. Also ensure proper consolidation and curing of FCR to minimize honeycombing, cracking and delamination.
High Performance Shotcrete (HPS)	Alternate to FCR for ≥100 ft^2. Note: HPS should be competitive with FCR for 100 ft^2 to 200 ft^2 if all repair area is localized. HPS should be competitive regardless of locality of repairs for >200 ft^2.	Horizontal, Vertical and Overhead Can be used in locations that are difficult to form.	Unlimited depth. Follow manufacturer's recommendations for max. lift thickness (4 in. max.).	Acceptable for all areas for aesthetics. Note: Proper curing is extremely important.
Epoxy Mortar Repair	Small Quantities	Use mainly for overhead applications (Consider potential hazard to users under structure).	Shallow: 2 in. max. Follow manufacturer's recommendations	Use only when quick set is necessary. General poor appearance. Try to avoid use where repair is exposed to public. Proper mixing of materal is critical.
Polymer Modified Portland Cement Mortar Repair	Recommended for <10 ft^2, but 10 ft^2 is not a maximum limit. Can also be specified for other small quantities.	Horizontal, Vertical and Overhead (Consider potential hazard to users under structure).	Intended for very shallow repairs (2 in. max. depth). Can allow deeper repairs with multiple lifts, but use is discouraged.	Acceptable for all areas for aesthetics. Generally favored over epoxy motar repair unless quick set is required. Note: If deep repairs are required (with multiple lifts), follow manufacturer's recommendations very closely.
Concrete Jacking	Large Quantity (Multiple pier stems)	Generally intended for encapsulation to increase rebar cover (pier stems).	Intended for shallow repairs. Can allow deep repair, but if repair depth >8 in. then repairs should be done prior to encasement (leave rough surface).	Acceptable for all pier locations. Desirable to encase full height of pier column when visible to traffic.
Epoxy Crack Sealing	Any Quantity	Intended for locations on structural elements exposed to water and/or salt intrusion. Generally not intended for non-structural elements (i.e. slope walls, crash walls).	Min. crack width should be more than thickness of a dime ($\frac{1}{16}$ in.). Crack length should be >24 in. (to allow a min. of 2 zerks or nipples).	Minimize use where there is no expansion joint or other source of water intrusion. Ensure specifications are followed for stoning and grinding, zerk removal, etc. for aesthetics

Table 1.17.1-2

Guidelines for the Selection of Substructure Repair Methods

1.17.2 Crack Sealing

Cracks in concrete substructures, with crack openings less than or equal to 1/2 inch, are repaired by injecting an epoxy crack sealing material into the crack. Cracks located in a wall with voided areas behind the wall cannot be effectively sealed by injecting material into the cracks unless the voided area has been filled with material which will prevent the injected crack sealing material from being forced into the voided area. Hairline cracks need not be sealed but their locations should be noted in the repair plans.

Cracks with openings greater than 1/2 inch should be sealed by removing all loose material along the edges of the crack and then using an expansive cement grout to fill the crack. The presence of large vertical cracks in an unreinforced concrete pier may require the installation of a steel collar as shown in Figure 1.17.2-1, if a determination is made that the cracks will reinitiate after repairs are made.

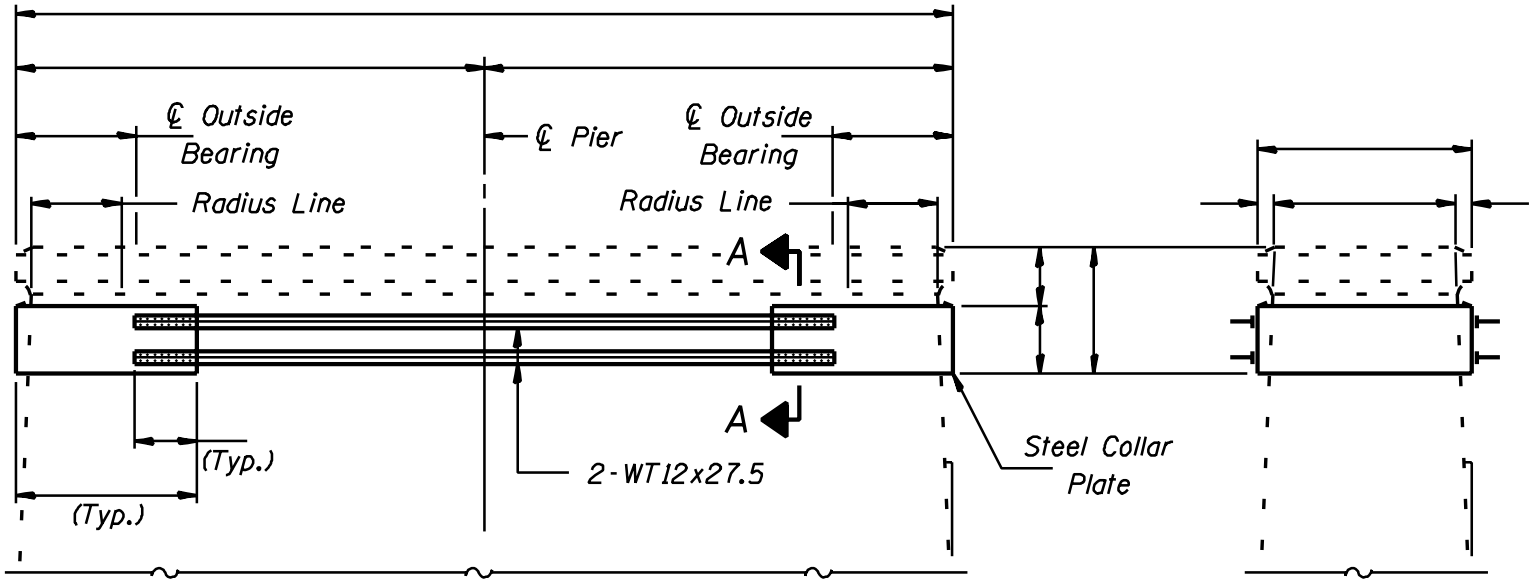

FRONT ELEVATION

END VIEW

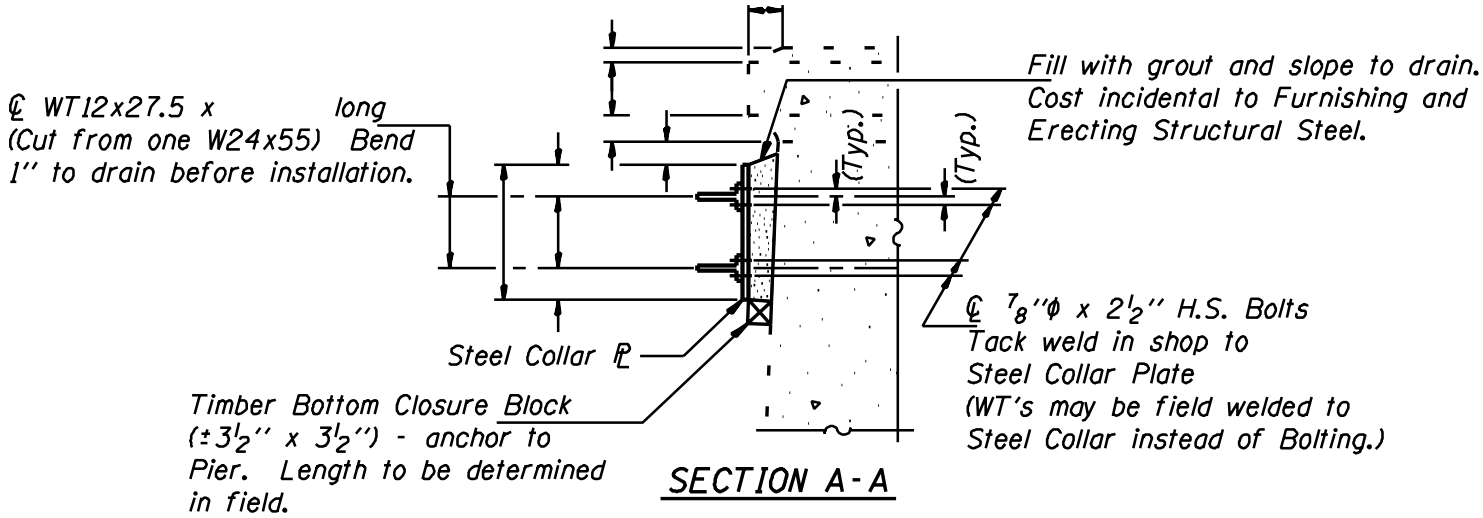

SECTION A-A

STEEL COLLAR DETAIL

Figure 1.17.2-1

1.17.3 Mortar Repairs

Shallow repairs of deteriorated concrete substructure surfaces can be made using polymer modified portland cement mortar. This type of repair should be limited to use for repairing concrete surfaces when the depth of the deterioration does not extend below the existing reinforcement bars or to a depth of 2 inches for unreinforced substructure units. The application of mortar repairs to overhead surfaces should be avoided and the repair should not be used on any portion of a structure located directly over vehicular or pedestrian traffic.

1.17.4 Formed Concrete Repairs

Formed concrete repairs can be categorized into the following two types:

1. formed concrete repairs with depths of repair less than or equal to 5 inches.
2. formed concrete repairs with depths of repair greater than 5 inches but less than 12 inches.

Both types of repairs use formed concrete to replace the deteriorated concrete areas.

When making a formed concrete repair, the perimeter of the deteriorated area should be saw cut to a depth of 1 inch after the limits of unsound concrete have been determined. The existing concrete within the saw cut area should be removed to sound concrete and to a depth at least 1 inch below the inside surface of the existing reinforcement bars. The existing reinforcement bars within the repair area must be cleaned and damaged or deteriorated reinforcement bars must be replaced prior to the placement of the repair concrete.

The effect of the concrete removal, required for a formed concrete repair, on the strength of the structure during the repair operations must be considered. When an extensive area of the substructure, such as an entire column face, is to be repaired, the superstructure should be temporarily supported until the concrete repair has cured.

1.17.5 Pneumatically Placed Mortar

High strength pneumatically placed mortar (shotcrete) may be used in lieu of formed concrete repairs. The saw cutting, concrete removal and reinforcement bar repair requirements for formed concrete repairs should also be applied to shotcrete repairs.

1.17.6 Retaining Wall Replacement

The cause of a retaining wall failure should be determined prior to the replacement of the wall. The failure may have been caused by a vehicular impact, a design or construction error, the placement of additional backfill behind the wall, the lack of sufficient drainage of ground water from behind the wall, the undermining of the footing, the slope failure of embankment material behind the wall or the general long term deterioration of the wall. The Bureau of Bridges and Structures should be contacted to investigate the cause of the failure.

When the entire wall, including the footing, has failed, complete replacement is necessary. However, if the footing has not failed and analysis indicates that it can carry the anticipated loadings, the failed wall stem can be removed and a new wall can be attached to the existing footing using epoxy grouted reinforcement bars as shown in Figure 1.17.6-1.

The water seal in a joint between a replaced section of retaining wall and an adjacent structure should be maintained. When it is not possible to salvage the existing water seal, the details shown in Figure 1.17.6-2 can be used.

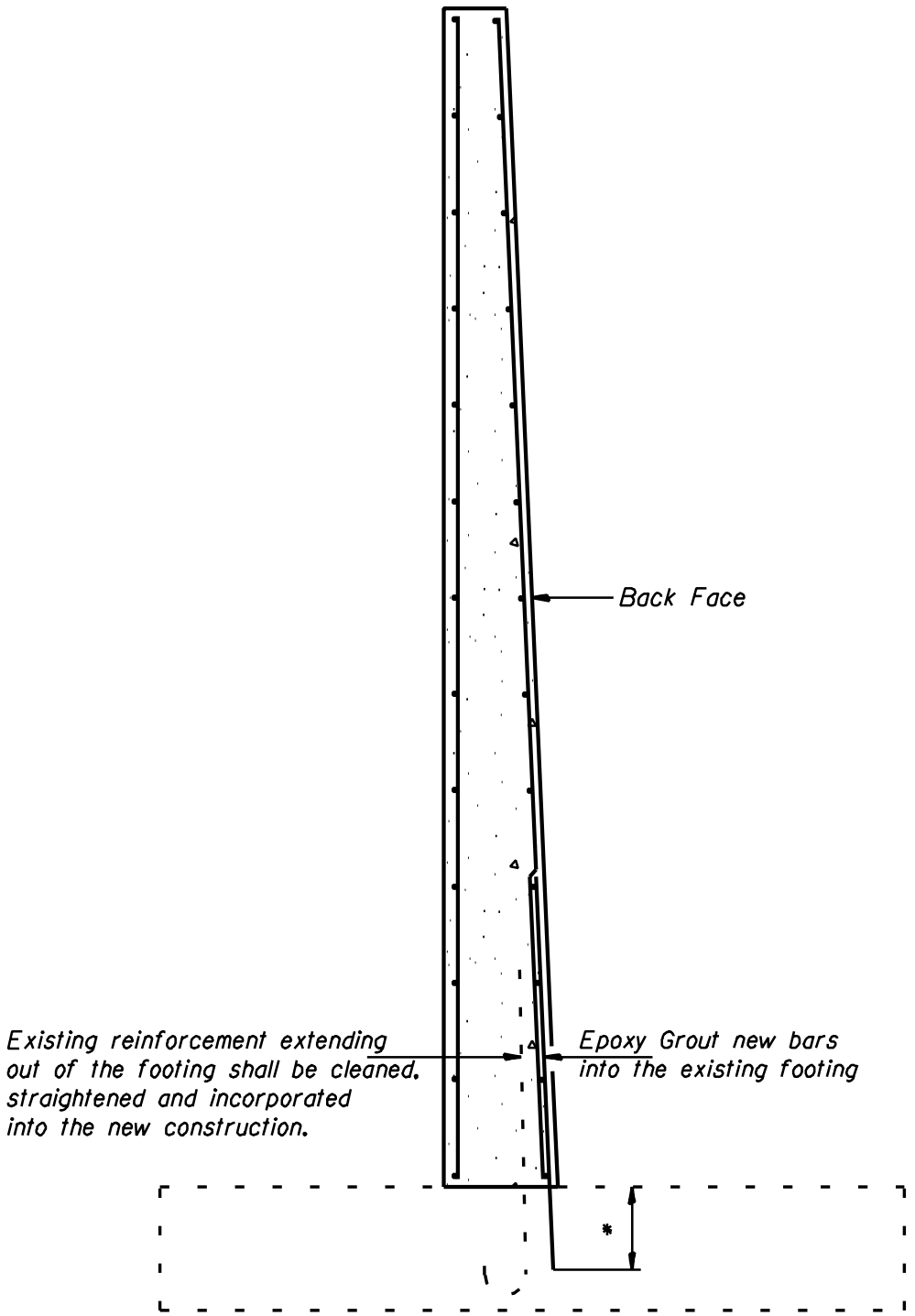

* Length required to develop full capacity of reinforcement bar.

RETAINING WALL STEM REMOVAL AND REPLACEMENT

Figure 1.17.6-1

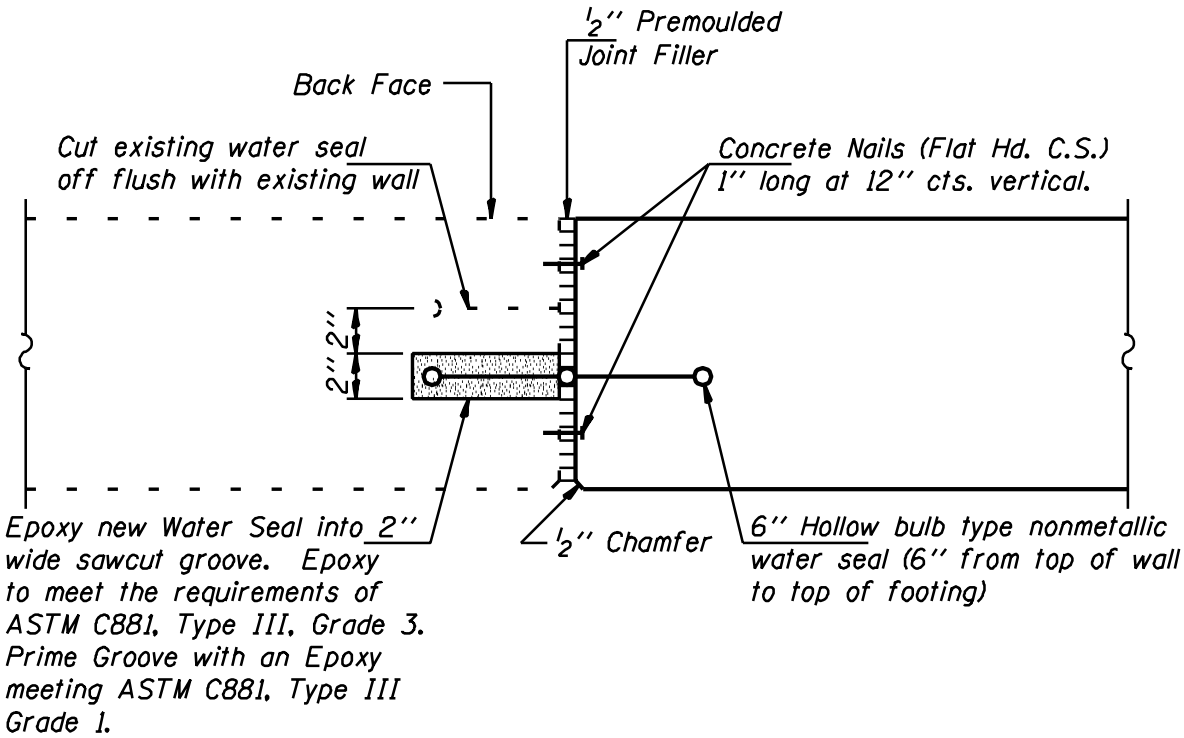

WATER SEAL
REPLACEMENT DETAIL

Figure 1.17.6-2

1.17.7 Abutment Wall Movement

When excessive horizontal movement has occurred in the front wall of closed concrete abutments, measures should be taken to determine the cause and to stabilize the movement. Closed concrete abutments are generally designed with:

1. the front wall restrained against movement at both the top of the wall where it meets the superstructure and at the bottom of the wall where it is attached to the footing.
2. the front wall acting as a cantilever rigidly attached to the footing and free to deflect at the top of the wall adjacent to the superstructure.

Abutment walls designed to be restrained at the top and bottom of the wall should not experience any horizontal deflection at those locations. Occasionally the top restraining element of this type of wall will fail and allow the top of the wall to move. If the wall is determined to be in sound structural condition, except for the loss of top restraint, restraining angles can be attached to the bottom of the superstructure as shown in Figure 1.17.7-1. If the structural integrity of the wall has been compromised by movement or analysis shows that the wall is structurally deficient, a steel frame work can be installed between the abutments as illustrated in Figure 1.17.7-2.

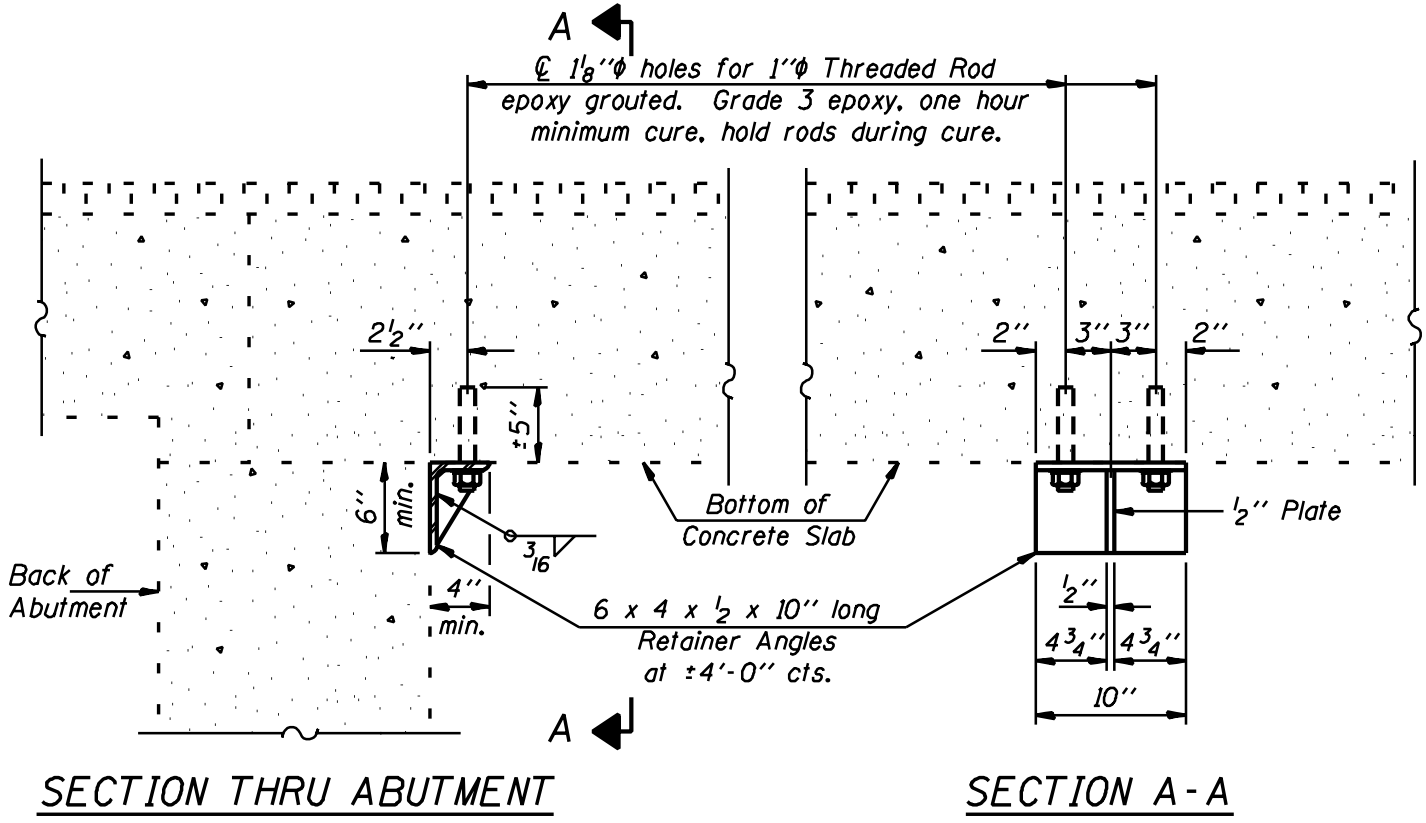

ABUTMENT WALL TOP
RESTRAINING ANGLE DETAIL

Figure 1.17.7-1

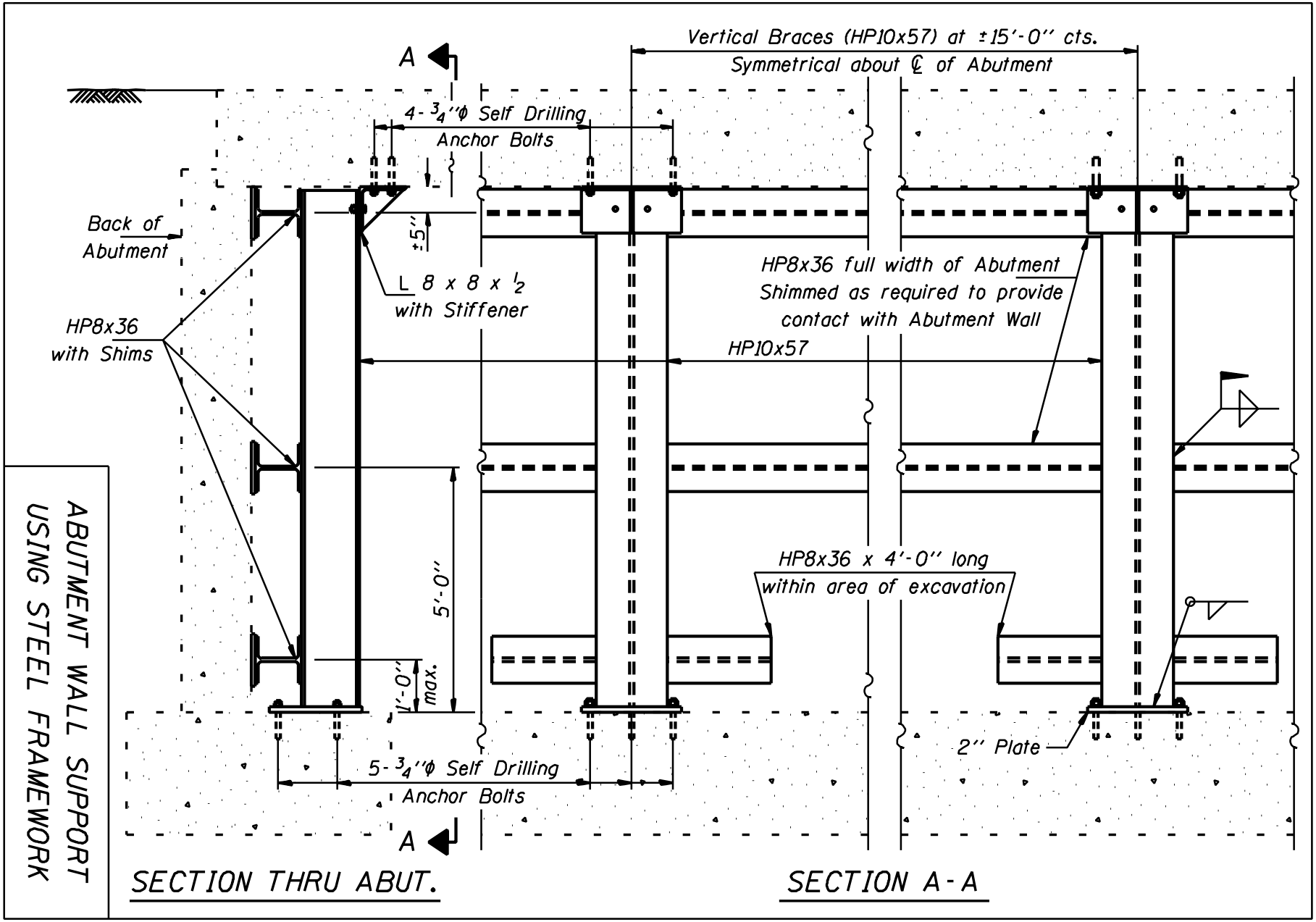

ABUTMENT WALL SUPPORT
USING STEEL FRAMEWORK

Figure 1.17.7-2

Abutment walls designed to act as cantilevers will deflect horizontally after backfill material has been placed behind the wall. Also, cantilevered abutment walls may experience additional horizontal movement when the height of the backfill is significantly increased by the raising of the roadway profile grade during a rehabilitation of the structure. If the existing abutment wall cannot carry the increased loading without exceeding the design stresses of the reinforcement bars and concrete used for its original construction, excessive horizontal deflections may occur at the top of the wall. The wall can be stabilized by placing additional embankment material in front of the abutment wall as shown in Figure 1.17.7-3 or by constructing counterforts as shown in Figure 1.17.7-4. Prior to adopting a method of stabilizing a wall, the effect of the method on the size of the bridge opening and the hydraulic adequacy of the structure must be considered.

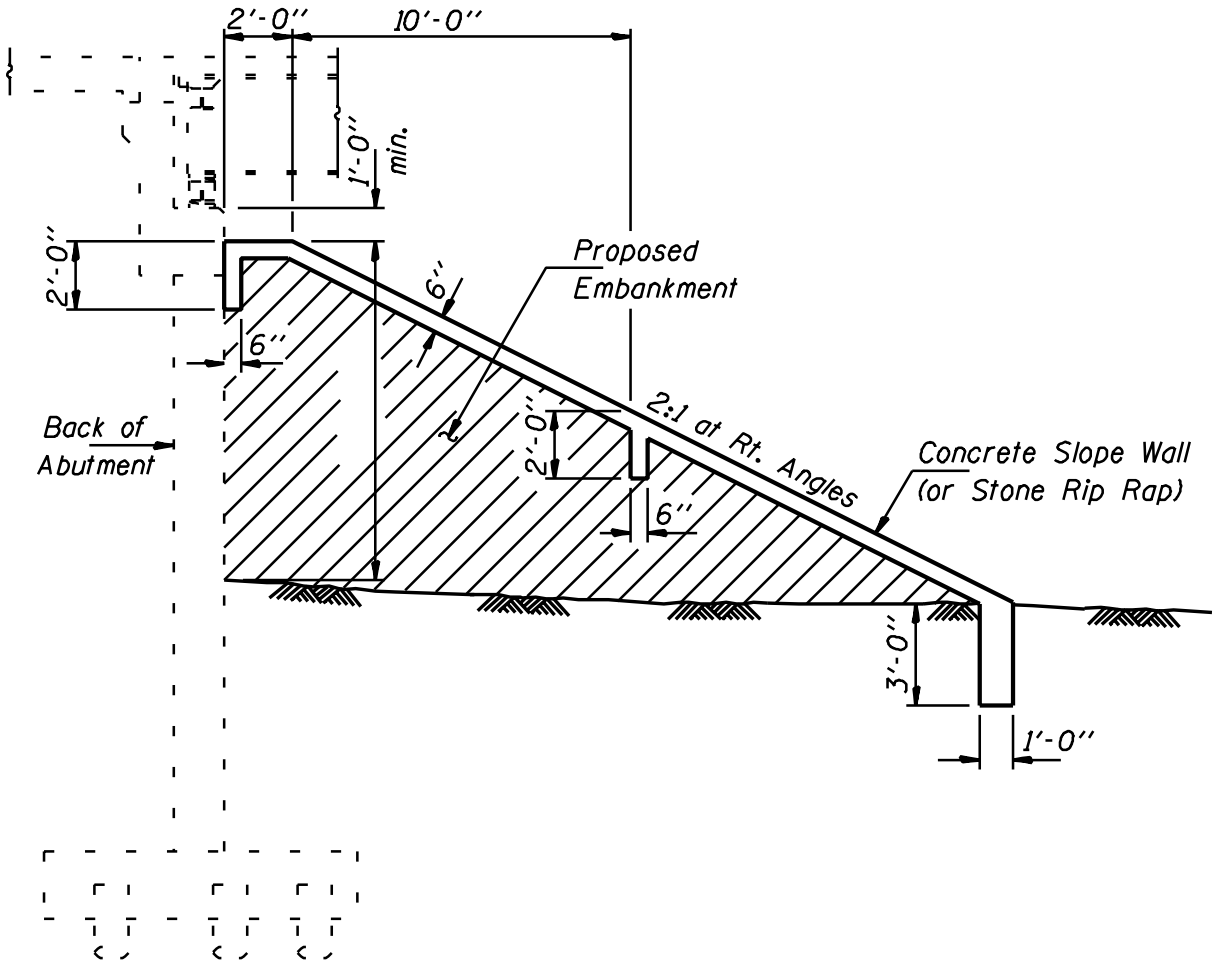

SECTION THRU ABUTMENT

ABUTMENT WALL SUPPORT
USING EMBANKMENT

Figure 1.17.7-3

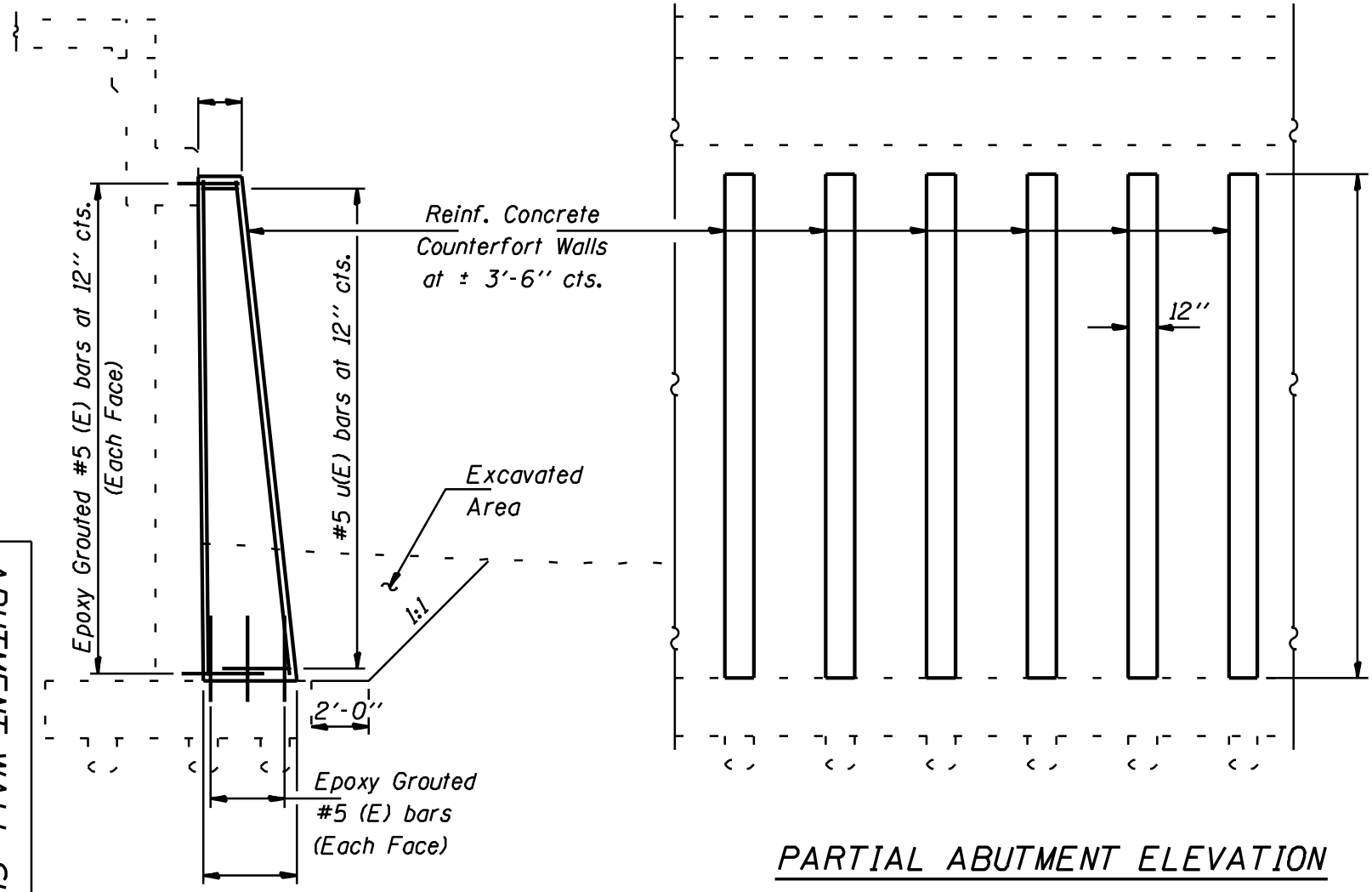

ABUTMENT WALL SUPPORT
USING COUNTERFORTS

Figure 1.17.7-4

SECTION 3 – INSPECTION

June 2015

Table of Contents

Section 3 Inspection 1
3.1 General 1
3.1.1 Purpose and Scope 1
3.1.2 *National* Bridge Inspection Standards 2
3.1.3 Illinois Bridge Inspection Organization 3
3.1.4 Illinois Structure Information System 4
3.1.5 Structure Information and Procedure Manual 4
3.1.6 Maintenance Management Information System 5
3.1.7 Bridge Management System 5
3.1.8 Structure Information Management System 5
3.1.9 Bridge Inspection System 5
3.2 Structure Inventory 7
3.2.1 Reporting Inventory Information 7
3.2.2 Updating Inventory Information 8
3.2.3 The National Bridge Inventory 8
3.3 Structure Inspections 9
3.3.1 General 9
3.3.1.1 Inspection Forms 12
3.3.2 Initial Inspections 12
3.3.3 Routine Inspections 13
3.3.3.1 Routine Inspections – In-Depth Inspection Procedures 15
3.3.3.2 Routine Inspections – Structures over Waterways 16
3.3.4 Underwater Inspections 17
3.3.4.1 Inspection Methods for Assessing Substructure Conditions Below Waterline 19
3.3.4.2 Procedures for Underwater Inspections 20
3.3.4.3 Effect of Conditions Below Waterline on Substructure Rating 21
3.3.4.4 Determining Safe Conditions for Standard Diving Inspections 22
3.3.4.4.1 IDOT Expectations for Routine Diving Inspection Team 23
3.3.4.4.2 Procedures for Underwater Diving Inspections 24
3.3.5 Fracture Critical Member Inspections 26
3.3.5.1 Identifying Bridges with Fracture Critical Members 28
3.3.5.2 Common Problematic Details on Fracture Critical Members 31
3.3.5.3 Recording Fracture Critical Member Inspections 32
3.3.5.4 Identifying Misclassified Bridges 33

3.3.5.5 Fracture Critical Concerns for Gusset Plates *33*
3.3.5.5.1 Gusset Plates - Initial Inspection for Load Rating..... *33*
3.3.5.5.2 Gusset Plate Assessment During Fracture Critical Member Inspections *36*
3.3.5.6 Non-Destructive Testing for Fracture Critical Member Inspections *36*
3.3.6 Special Inspections..... *37*
3.3.6.1 Recording and Performing Special Inspections..... *38*
3.3.6.2 Special Inspections for Monitoring Substructure and Channel Conditions Below the Waterline *41*
3.3.6.3 Special Inspections for Pin and Link Assemblies *42*
3.3.7 In-Depth Inspections..... *43*
3.3.7.1 Inspection of Major Bridges by the Bureau of Bridges and Structures *44*
3.3.8 Damage Inspections..... *45*
3.3.8.1 Damage Inspections Policy *45*
3.3.8.2 Damage Inspections for State Maintained Structures *46*
3.3.8.3 Damage Inspections for Local Agency Structures..... *46*
3.3.9 Load Rating Inspections *47*
3.3.9.1 Load Rating Inspection Policy *47*
3.3.9.1.2 Load Rating Inspections for State Maintained Structures..... *48*
3.3.9.1.3 Load Rating Inspections for Local Agency Structures..... *48*
3.3.10 Complex Bridge Inspections..... *49*
3.3.10.1 General Complex Bridge Inspection Procedures..... *50*
3.3.10.2 General Inspection Requirements for Suspension Bridges..... *50*
3.3.10.3 General Inspection Requirements for Cable-Stayed Bridges..... *53*
3.3.10.4 General Inspection Requirements for Movable Bridges *55*
3.3.11 Element Level Inspections..... *56*
3.3.12 Critical Findings *56*
3.3.12.1 Identifying a Potential Critical Finding *56*
3.3.12.2 Critical Finding Determination *58*
3.3.12.3 Submitting a Critical Finding Report *58*
3.3.12.4 Failure to Report a Critical Finding *59*
3.3.12.5 Reporting Critical Findings to FHWA..... *59*
3.3.13 Inspection of Closed Structures..... *60*
3.4 Inspection Intervals 61
3.4.1 Routine Inspection Interval *61*
3.4.1.1 Routine Inspection 48-Month Interval Criteria *62*
3.4.1.2 Routine Inspection 12-Month Interval Criteria *64*
3.4.1.3 Routine Inspection Interval for Bridges over Waterways..... *65*

3.4.2 Underwater Inspection Interval *66*
3.4.3 Substructure and Channel Monitoring Requirements and Options *69*
3.4.4 Fracture Critical Member Inspection Interval *72*
3.4.5 Element Level Inspection Interval *72*
3.5 Non-Destructive Testing 73
3.5.1 General *73*
3.5.2 D-Meter Thickness Measurement (DM) *73*
3.5.3 Dye Penetrant Testing (PT) *74*
3.5.4 Magnetic Particle Testing (MT) *76*
3.5.5 Ultrasonic Testing (UT) *79*
3.6 Inspection of Pins, Links, and Hangers 80
3.6.1 Inspection of Pin & Link Assemblies *80*
3.6.1.1 General *80*
3.6.1.2 Inspector Qualifications *80*
3.6.1.3 Link Inspections *81*
3.6.1.4 Pin Inspections *82*
3.6.1.4.1 Preliminary Pin Inspections *82*
3.6.1.4.2 Supplemental Pin Inspections *86*
3.6.1.5 Inspection Records *86*
3.6.2 Inspection of Cantilever Truss Suspended Span Pins & Hanger Members *88*
3.6.2.1 General *88*
3.6.2.2 Pin Inspections *88*
3.6.2.3 Hanger Member Inspections *89*
3.6.3 Inspection of Pins and Eyebars in Eyebar Trusses *89*
3.6.3.1 General *89*
3.6.3.2 Pin Inspections *89*
3.6.3.3 Eyebar Inspections *89*
3.7 Bridge Scour and Plans of Action 91
3.7.1 General *91*
3.7.2 New and Rehabilitated Bridges over Waterways *91*
3.7.3 Scour Plan of Action (POA) *92*
3.7.4 Scour Evaluation and Stability Assessment of Existing Bridges *93*
3.7.4.1 Reporting Actual Scour at Scour Critical Bridges *94*
3.7.4.2 Reporting Actual Scour at Scour Susceptible Bridges *94*
3.7.4.3 Reporting Actual Scour at Non-Scour Critical / Non-Scour Susceptible Bridges *95*
3.7.5 Scour Evaluation Study for Existing Bridges *95*

3.7.6 Bridge Scour Monitoring System *97*
3.7.7 Updating the Scour Critical Rating *100*
3.7.8 Countermeasures *101*
3.8 Employee and Bridge Inspection Safety 102
3.8.1 General *102*
3.8.2 Bridge Inspection Safety *102*
3.8.2.1 Personal Safety *103*
3.8.2.2 Worksite Protection and Flagging *103*
3.8.2.3 Fall Protection *103*
3.8.2.4 Confined Space Entry *103*
3.8.3 Non-State Employee Bridge Inspection Personnel *104*
3.9 Quality Control and Quality Assurance 105
3.9.1 General *105*
3.9.2 Personnel Qualifications *106*
3.9.2.1 Bridge Inspection Training *106*
3.9.2.1.1 Training for Underwater Inspections *106*
3.9.2.1.2 Fracture Critical Member Inspection Training *107*
3.9.2.2 Bridge Inspection Experience *107*
3.9.2.3 Program Manager Qualifications *108*
3.9.2.4 Team Leader Qualifications *109*
3.9.2.4.1 Structural and Professional Engineers as Team Leaders *110*
3.9.2.4.2 Engineering Personnel as Team Leaders *110*
3.9.2.4.3 Technical Personnel as Team Leaders *111*
3.9.2.4.4 Review of Bridge Inspection Experience *111*
3.9.2.5 Load Rating Personnel Qualifications *114*
3.9.3 Quality Control *114*
3.9.3.1 *Review of Bridge Inspection Reports* *114*
3.9.3.2 Inspector's Performance *115*
3.9.3.3 Personnel Qualifications *116*
3.9.3.4 *NBIS Bridge Inspection Reports in the Bridge File* *116*
3.9.3.5 NBIS Data Verification *117*
3.9.3.5.1 Recognizing Errors, Omissions, or Changes in the Field *117*
3.9.3.5.2 Resolution of Inspection Errors or Omissions *118*
3.9.3.6 Bridge Inspection Refresher Training *119*
3.9.3.7 Identifying Special Skills, Training, and Equipment *120*
3.9.4 Quality Assurance *120*
3.9.4.1 Quality Assurance Reviews *120*

3.9.4.1.1 Office Reviews *121*
3.9.4.1.2 Field Reviews *121*
3.9.4.2 Final Quality Assurance Review Report *122*
3.9.4.3 Annual Quality Assurance Review Report *122*
3.10 Coordination with the Illinois State Toll Highway Authority 123
3.10.1 Performance of ISTHA Inspections *123*
3.10.2 Interagency Coordination of ISTHA Inspections *123*
3.10.3 ISTHA Inspection Permit Requirements *124*
3.10.4 Reporting ISTHA Inspection Information *124*
3.11 Inspection of Non-NBIS Structures 126
3.11.1 General *126*
3.11.2 Small Bridge Inspection Program *126*
3.11.2.1 Small Bridge Inventory and Appraisal *127*
3.11.2.2 Routine Inspections for Small Bridges *129*
3.11.3 Ancillary Structures *131*
3.11.4 Structures Not Carrying Public Roadways *132*

Section 3 Inspection

Tables and Figures

3.3 ***Structure Inspections 9***

Table 3.3.4.4 *IDOT Criteria for Defining Unsafe Conditions for Underwater Diving Inspections 23*
Table 3.3.5.1 *Fracture Critical Bridge Types..... 30*
Table 3.3.6.1A *Special Inspection Inventory Type 39*
Table 3.3.6.1B *Special Inspection Condition Status..... 40*

3.4 ***Inspection Intervals 61***

Table 3.4.1.1 *48 Month NBIS Inspection Interval Structure Material and Type Exclusions 62*
Figure 3.4.3-1 *Determining Methods for Assessment of Substructure Condition Below the Waterline 70*
Table 3.4.3 Substructure and Channel Monitoring Options During *Routine* and Underwater Inspections..... *71*

3.6 ***Inspection of Pin & Link Assemblies 80***

Figure 3.6.1.4.1-1 *Diagram "A" – IDOT Test Block and Specimen..... 85*

3.7 ***Bridge Scour and Plans of Action 91***

Table 3.7.6.A *Scour Monitoring Schedule 98*
Table 3.7.6.B *Scour Monitoring Response Times 100*

3.9 ***Quality Control and Quality Assurance 105***

Table 3.9.2.4.4 *Team Leader Bridge Inspection Experience Requirements..... 112*

3.11 ***Inspection of Non-NBIS Structures 126***

Figure 3.11.2-1 *Bridge Length for Multi-Pipe Culverts 127*
Table 3.11.2.2.A *Routine Inspection Intervals for Buried Structures..... 130*
Table 3.11.2.2.B *Routine Inspection Interval for Non-Buried Structures..... 131*

Section 3 Inspection

3.1 General

3.1.1 Purpose and Scope

Congress implements highway policy through passage of multi-year authorization bills (The Highway Bill). The Highway Bill establishes the federal statutes that govern, in part, the inspection of the Nation's bridges. The statutes are codified in the United States Code (USC) and grant authority to the US Department of Transportation, Federal Highway Administration (FHWA) to establish and promulgate, or publish, the National Bridge Inspection Standards (NBIS) in the Code of Federal Regulations (CFR) under Title 23, Chapter I, Subchapter G, Part 650, Subpart C. (See Appendix A3-1)

To maintain full compliance with the NBIS, the Illinois Department of Transportation must adhere to all policies, procedures, and regulations established by the FHWA. This section of the Structural Services Manual provides documentation of the official bridge inspection policies for the State of Illinois.

The primary purpose of this section is to provide information pertaining to bridge inventory and inspection activities. The information provided in this section summarizes IDOT inspection policies and guidelines for the effective and efficient management of the bridge inspection program. The information provided in regard to inspection types and frequencies is also applicable to structures under the jurisdiction of agencies other than IDOT, where the oversight for inspections is the responsibility of the agency having jurisdiction.

Inspections of structures located on public roads are necessary to provide adequate safety for the traveling public, ensure compliance with the National Bridge Inspection Standards (NBIS), and protect the large investment in Illinois bridges.

The primary function of the bridge inspections performed in accordance with the NBIS is to ensure that bridges serving roadways in Illinois remain safe for all users of the highway system. The results of the inspections are also used as a tool to assist in

determining bridge maintenance and improvement needs. To enhance this capability, the Department has implemented element level inspections that provide information which may be used in a Bridge Management System (BMS) complying with federal guidelines. The primary use of the BMS is to identify existing and potential deterioration in individual bridge members, and to predict bridge maintenance and construction programming needs on a system-wide basis.

3.1.2 National Bridge Inspection Standards

Bridge inspections are generally performed and recorded under the requirements of the NBIS. The NBIS contains the federal regulations establishing minimum requirements for inspection organizations, qualifications of personnel, frequency of inspections, inspection procedures, and the preparation and maintenance of a bridge inventory.

The FHWA administers the NBIS under the guidelines outlined in their *Recording and Coding Guide for the Structure Inventory and Appraisal of the Nation's Bridges.* (Federal Coding Guide) See Appendix A3-2. The information collected, as required by the NBIS, is reported annually to the FHWA. The NBIS applies to all structures defined as highway bridges located on all public roads. The following definitions, which have been taken from federal regulations, apply:

> Bridge: - A structure, including supports, erected over a depression or an obstruction, such as water, highway, or railway, and having a track or passageway for carrying traffic or other moving loads, and having an opening, measured along the center of the roadway of more than 20 feet between undercopings of abutments or spring lines of arches, or extreme ends of openings for multiple boxes; it may also include multiple pipes, where the clear distance between openings is less than half of the smaller contiguous opening.
>
> Public Road: - Any road or street under the jurisdiction of and maintained by a public authority and open to public travel.

Although the NBIS requirements are not directly applicable to privately owned bridges, the FHWA strongly encourages private bridge owners to follow the NBIS as the standard

for inspecting their bridges. In those instances where a privately owned bridge carries or crosses a public road, the FHWA has indicated that States or agencies should encourage the private bridge owner to inspect their bridge in accordance with the NBIS or reroute their public road.

In addition to the Federal Coding Guide, several national publications have been developed to assist the states in uniformly complying with the NBIS. Several of these are:

- Bridge Inspector's Reference Manual (FHWA)
- Culvert Inspection Manual (FHWA)
- Inspection of Fracture Critical Bridge Members (FHWA)
- Underwater Inspection of Bridges (FHWA)
- Evaluating Scour at Bridges (FHWA)
- Bridge Inspector's Manual for Movable Bridges (FHWA)
- Manual for Bridge Evaluation (AASHTO)
- Guide Manual for Bridge Element Inspection (AASHTO)

(See Appendix A3-2 for information about obtaining these publications)

3.1.3 Illinois Bridge Inspection Organization

Illinois complies with the National Bridge Inspection Standards (NBIS) program requirements for inspection and inventory data through the following responsible positions.

State Program Manager: The IDOT Bridge Management Unit Chief within the Bureau of Bridges and Structures providing statewide oversight for all NBIS related activities. The State Program Manager is responsible for inspection policy and to ensure the quality of the NBIS program.

Local Program Manager: The IDOT Local Bridge Unit Chief within the Bureau of Bridges and Structures providing assistance to the State Program Manager for statewide oversight of all NBIS related activities performed by local agencies or other state agencies.

Central Program Manager: The IDOT Bridge Inspection Unit Chief within the Bureau of Bridges and Structures providing oversight for all NBIS activities related to the In-Depth Inspections performed for designated Major Bridge Structures.

District Program Manager: The IDOT District Bridge Maintenance Engineers providing oversight for all NBIS related activities within their designated area of responsibility.

Area Program Manager: The IDOT Area Bridge Inspection Engineers in District 1 providing oversight for all NBIS related activities within their designated area of responsibility.

Agency Program Manager: All local agencies with jurisdiction of a structure in the National Bridge Inventory must designate a Program Manager to ensure compliance with the NBIS, and provide guidance and management of their bridge inventory.

3.1.4 Illinois Structure Information System

The Illinois Structure Information System (ISIS) is the official database containing all Illinois bridge inventory and inspection information. The bridge data stored in ISIS for each structure includes an inventory record, as well as Routine, Fracture Critical Member, Special, and Underwater Inspection records (including previous inspection records); other information related to construction and reconstruction, highway routes, scour evaluation, microfilm, hydraulics and design. See Section 3.9.3.7 for a complete listing of typical records and documents in the official Bridge File.

3.1.5 Structure Information and Procedure Manual

The IDOT *Structure Information and Procedure* (SIP) Manual (See Appendix A3-2) is the official document describing ISIS, which includes the various data items it contains and coding of each item. This includes the criteria to be used by bridge inspectors when assigning condition ratings and appraisals. Use and knowledge of this manual is essential for all inspectors and others involved in the inventory and inspection of Illinois bridges. The manual is maintained by the IDOT Office of Planning and Programming, Data Management Unit.

3.1.6 Maintenance Management Information System

The Maintenance Management Information System (MMIS) is utilized by the IDOT Bureau of Operations to track various maintenance operations performed on IDOT maintained structures.

3.1.7 Bridge Management System

The Bridge Management System (BMS) contains element level inventory and condition state information utilizing the AASHTOWare Bridge Management System software. This system provides the Department with an enhanced capability of predicting future bridge programming needs. Element Level Inspections provide detailed, quantitative condition data for each element of a bridge. Guidance for this system is included in the *AASHTO Manual for Bridge Element Inspection* and the *Illinois Manual for Bridge Element Inspection*. (See Appendix A3-2)

3.1.8 Structure Information Management System

The Structure Information Management System (SIMS) provides IDOT personnel with access to information contained in ISIS, Program Planning System (PPS), Bridge Project Tracking (BPT), and the AASHTOWare Bridge Management System for State maintained structures. SIMS provides those involved in or managing bridge inspection programs with a means of easily and quickly accessing NBIS information for individual structures. UserSIMS allows IDOT personnel to run queries to assess inspection needs for their entire bridge inventory. For bridges under the maintenance jurisdiction of local agencies, the SIMS-County database file of local bridges for each county may be obtained from IDOT's website at: http://www.idot.illinois.gov/transportation-system/local-transportation-partners/county-engineers-and-local-public-agencies/LPA-Project-Development-and-Implementation/sims.

3.1.9 Bridge Inspection System

The Bridge Inspection System (BIS) is utilized by IDOT bridge inspectors to record the results of bridge inspections in the following databases:

- Illinois Structure Information System, which contains data from the following NBIS related inspections:
    - Routine Inspections
    - Underwater Inspections
    - Fracture Critical Member Inspections
    - Special Inspections
- Bridge Inspection – Structured Query Language (SQL), which contains information regarding:
    - Element Level Inspections
    - Inspector Work Candidates

Using BIS, inspection personnel can download the most recent inspection information onto a laptop computer prior to an upcoming field inspection. The inspector can then utilize the laptop computer during the next field inspection and can input new inspection data during the inspection or at any time prior to returning to the office, subsequent to the field inspection. After returning to the office, the inspector can utilize BIS to directly upload the recently obtained bridge inspection information for eventual inclusion into ISIS, after approval by supervisory personnel.

3.2 Structure Inventory

3.2.1 Reporting Inventory Information

Directions for recording structure inventory information are provided in the IDOT Structure Information and Procedure (SIP) Manual. Each bridge involved with a public road, whether carrying or crossing the roadway, must be included in the bridge inventory. In accordance with NBIS, bridges carrying a public roadway must be inspected and reported to FHWA . Bridges that do not carry motor vehicle traffic but cross over a public road, such as pedestrian/bicycle bridges or railroad bridges, must also be included in the bridge inventory. Even though Routine Inspections are not required by NBIS for these structures, they are recommended as a matter of public safety. Inspections for bridges that do not carry public roadways are further addressed in Section 3.11 of this manual.

Bridge inventory information, or changes to the bridge that affect the inventory, must be recorded in ISIS for bridges involving state maintained roads, within 90 days of opening to traffic or when necessary. In general, the inventory data is entered by Region/District personnel. Data entry for some items, such as load rating and hydraulics, are the responsibility of the Bureau of Bridges and Structures.

For bridges not directly under state jurisdiction, such as township, county and municipal bridges, bridge inventory information or changes to the bridge that affect the inventory must be recorded in ISIS within 180 days of opening the bridge to traffic or when necessary. This also applies to state agencies other than IDOT, such as the Illinois State Toll Highway Authority (ISTHA) and the Illinois Department of Natural Resources (IDNR). The local agency with jurisdiction of the roadway carried by the bridge is primarily responsible for submitting the inventory information to IDOT for inclusion in ISIS. If the bridge passes over a public road, but does not carry a public road, the reporting responsibility rests with the local agency having jurisdiction of the road passing under the structure.

3.2.2 Updating Inventory Information

A general review of inventory items should be a part of each Routine Inspection, with any needed corrections promptly reported to appropriate personnel, so that the bridge data in ISIS can be kept as accurate as possible. This general review of inventory information during the Routine Inspection does not necessarily require the inspector to take physical measurements, but should include an effort to identify obvious errors in existing inventory information. The inspector should print a copy of the Inspector's Inventory Report (S-114) or a Master Structure Report to refer to during the Routine Inspection, noting any discrepancies or missing information on the form.

3.2.3 The National Bridge Inventory

ISIS data is submitted to FHWA annually. This data becomes part of the National Bridge Inventory (NBI) which is defined by FHWA as:

> National Bridge Inventory: The NBI is a collection of information (database) covering over 600,000 of the Nation's bridges located on public roads, including Interstate Highways, U.S. highways, State and County roads, as well as publicly-accessible bridges on Federal lands. It presents a State by State summary analysis of the number, location, and general condition of highway bridges within each State.

3.3 Structure Inspections

3.3.1 General

There are various types of bridge inspections derived directly from the NBIS and other FHWA referenced publications and technical documents as follows:

Initial Inspection: The first inspection of a new bridge or a bridge that has undergone rehabilitation to provide all Structure Inventory and Appraisal (SI&A) data and other relevant data and to determine baseline structural conditions.

Routine Inspection: A regularly scheduled inspection consisting of observation and/or measurements needed to determine the physical and functional condition of the bridge, to identify any changes from initial or previously recorded conditions, and to ensure that the structure continues to satisfy present service requirements.

Underwater Inspection: Inspection of the underwater portion of a bridge substructure and the surrounding channel that cannot be inspected visually at low water by wading or probing, generally requiring diving or other appropriate techniques.

Fracture Critical Member Inspection: A Hands-On Inspection of a fracture critical member or member components that may include visual and other nondestructive evaluation.

Special Inspection: An inspection scheduled at the discretion of the bridge owner or Program Manager, used to monitor a particular known or suspected deficiency.

In-Depth Inspection: A close-up inspection of one or more members above or below the water level to identify any deficiencies not readily detectable using Routine Inspection procedures; Hands-On Inspection may be necessary at some locations.

Damage Inspection: An unscheduled inspection performed to assess structural damage resulting from environmental factors or human actions.

Load Rating Inspection: A scheduled inspection performed to investigate damage or deterioration in order to evaluate potential reductions in the live load carrying capacity.

Complex Bridge Inspection: This is an In-Depth Inspection, requiring Hands-On Inspection procedures, to assess the unique or unusual characteristics of the bridge according to a pre-established, written Complex Bridge Inspection Plan.

Element Level Inspection: Inspection of the individual elements of a bridge, each rated for severity and extent of deterioration, assigning percentages of each element in specific Condition States.

Hands-On Inspection: Inspection within arm's length of the component. Inspection uses visual techniques that may be supplemented by nondestructive testing.

These various inspections are performed at intervals controlled by such things as structural condition, structure type and details, site conditions, load capacity evaluation and scour critical evaluation. SI&A data must be entered into the inventory within 90 days of the date of inspection for IDOT or Federal Agency bridges and within 180 days of the date of inspection for all other bridges. The 90 and 180 day rules only apply to entry of the inspection data and shall not be used to extend the inspection intervals.

NBIS related inspections must be coordinated and performed by qualified personnel as stated in the NBIS requirements. The individuals with overall responsibility for controlling the quality of the NBIS inspection program in a specific area, designated as Program Managers, and the individuals leading field inspection teams, designated as Team Leaders, must meet the qualifications specified in Section 3.9, "Quality Control and Quality Assurance". An individual approved by the State Program Manager to function as a Team Leader must be present during Initial, Routine, Underwater, Fracture Critical Member, In-Depth, Damage, Load Rating, and Complex Bridge Inspections.

NBIS requires that all NBIS inspections, Routine Inspections, Underwater Inspections, Fracture Critical Member Inspections, Special Inspections, In-Depth Inspections, and Complex Bridge Inspections be performed within the specified inspection interval (See Section 3.4). Program Managers must ensure that their NBIS inspections do not become delinquent.

Element Level Inspections are required for all bridges on the National Highway System (NHS). IDOT policy requires Element Level Inspections on all IDOT maintained structures (See Section 3.3.11 for details).

On very rare occasions, some structures cannot be inspected within the specified interval due to site conditions beyond the Program Manager's control such as high water. When site conditions prohibit proper NBIS inspections, a memorandum must be placed in the Bridge File documenting the date and the reason why performing the inspection was not possible. The inspection must then be performed as soon as site conditions permit and the inspection can be scheduled.

Inspection procedures vary greatly depending on the characteristics of the bridge, the inspection type, and the extent of bridge deterioration. Detailed inspection procedures including guidance for taking and recording field measurements are provided in the Bridge Inspector's Reference Manual, the Manual for Bridge Evaluation, and in this Manual (See Appendix A3-2). Inspection procedures are provided for commonly encountered bridge types and elements.

If possible, bridges should be observed during the passage of heavy vehicular loads to assess the presence of excessive vibration, deflection or noise. If detected, further investigations should be made to determine their cause. Complex bridges require specific inspection procedures that are documented in an inspection plan for each Complex Bridge. (See Section 3.3.10)

3.3.1.1 Inspection Forms

The latest IDOT bridge inspection forms, available on the date of the inspection, shall be used. The latest forms are available for download here: BBS Forms.
(See Appendix A3-2)

The applicable IDOT standard bridge inspection form(s) must be completed for each bridge inspection, signed by the appropriate Team Leader and Program Manager, and permanently stored in the official Bridge File.

For inspections when the Program Manager responsible for oversight of the Team Leader, and the Program Manager responsible for all bridges in that jurisdiction is not the same person, then both Program Managers must sign the inspection form.

3.3.2 Initial Inspections

New and newly rehabilitated bridges must receive an Initial Inspection. For structures under the jurisdiction of IDOT, NBIS requires that this information be entered in ISIS within 90 days after opening the bridge to traffic.

For structures not under the jurisdiction of IDOT, the Initial Inspection must be performed and information must be entered in ISIS within 180 days after opening the bridge to traffic. The agency with jurisdictional responsibility for the structure is responsible for performing the inspection in accordance with NBIS requirements and reporting the information to the IDOT Region/District office, allowing sufficient time for data entry by IDOT. Local Agencies should coordinate the timing of submittal of inspection data with the District. The 90 and 180 day rules only apply to entry of the inspection data and shall not be used to extend the inspection intervals. The Routine Inspection Form shall be used to record the Initial Inspection. (See Appendix A3-2)

The purpose of an Initial Inspection is to verify the safety of a bridge in accordance with the NBIS, provide required inventory information of the as-built structure, and to determine its baseline structural condition.

Documents, including photographs, drawings (design, as-built, and shop), scour analysis, foundation information, hydrologic and hydraulic data, stream cross sections, pile driving records, and field changes shall be included in the Bridge File as applicable (See Section 3.9.3.7 for Bridge File content requirements).

The level of effort required to perform an Initial Inspection will vary according to the structure's type, size, design complexity, and location. An Initial Inspection may include Hands-On Inspection of main bridge members of the structure to document the baseline conditions.

3.3.3 Routine Inspections

Although commonly used to also determine bridge maintenance and repair needs, the primary focus of the Routine Inspection is public safety. This inspection must be performed for all bridges on public roads with an opening greater than 20 feet, measured face-to-face of abutments along the center line of the roadway (see definition for "Bridge" provided in Section 3.1.2). This inspection includes sufficient observations and measurements to determine the physical condition of a bridge in order to accomplish the following functions:

- Verification and updating condition ratings and appraisals assigned to various items pertaining to the physical condition and the functionality of the bridge.
- Identification and documentation of potential problems that may affect bridge safety.
- Correction of inaccuracies in the bridge inventory data. During Routine Inspections, inspectors are encouraged to verify inventory data items. Any inaccuracies in inventory data noted during the Routine Inspection should be documented and submitted to appropriate personnel for use in correcting data in the Illinois Structure Information System (ISIS).
- Determination of need for the Bureau of Bridges and Structures, or an Illinois Licensed Structural Engineer retained by an agency, to evaluate load-carrying capacity or determine repair needs.
- Documentation of maintenance work that may be required.

Inventory and inspection items are coded in accordance with the guidelines provided in the IDOT Structure Information and Procedure (SIP) Manual. The results will be recorded on the IDOT Routine Inspection Report (BBS-BIR) form (See Appendix A3-2). The BBS-BIR for each Routine Inspection is kept in the official Bridge File at the headquarters of the District or the Agency responsible for inspection.

The BBS-BIR form contains “Comments” fields for all inspection assessment items (ISIS Items 58, 59, 60, 61, 62, 71, 72, and 111). A concise description of deficiencies shall be included in the comments fields for all Ratings of “5” or less (“4” or “5” for ISIS Item 111).

It is recommended that a brief description of deficiencies be included in these comment fields for any Rating of “6”.

The BBS-ELI form contains “Comments” fields for all elements inspected during an Element Level Inspection. A concise description of deficiencies shall be included in the comments fields for elements with a Condition State of “3” or greater.

When the condition rating for Superstructure, Substructure or Culvert (ISIS Items 59, 60, or 62) is judged to warrant a drop to a level of "4" (poor condition) or lower, or the condition rating of the Deck (ISIS Item 58) drops to “3” (serious condition) or less, a subsequent Load Rating Inspection (See Section 3.3.9) is required to evaluate load-carrying capacity, since such a condition rating is an indication that a main structural member may have deteriorated to a point where its load-carrying capacity has been reduced. The Bureau of Bridges and Structures monitors ISIS to determine when condition ratings are lowered to levels requiring a Load Rating Inspection and will schedule an inspection and perform analysis as needed to determine the load-carrying capacity of the deteriorated structure.

If an inspection reveals that an imminent danger to the traveling public is likely, the inspector should immediately take necessary actions to protect the traveling public prior to notifying the Program Manager responsible for the structure and the Bureau of Bridges and Structures.

It is extremely important that Potential Critical Findings (See Section 3.3.12) are immediately reported to the District/Area Program Manager or the Agency Program Manager, and the State Program Manager or Local Program Manager in the Bureau of Bridges and Structures as applicable, to ensure that corrective action is taken to protect public safety and the structure. Other non-critical needs for maintenance and repair identified during the inspection should also be recorded, prioritized and scheduled.

When, in the judgment of the inspector performing the Routine Inspection, deterioration has seriously compromised the load-carrying capacity of the bridge, information should be provided immediately to the Bureau of Bridges and Structures, or the Illinois Licensed Structural Engineer providing consulting services to a Local Agency, to expedite the scheduling of a load rating inspection and evaluation.

When the Bureau of Bridges and Structures cannot provide a Load Rating Inspection for an Agency within a reasonable time frame, the responsible Agency is notified that they must retain the services of an Illinois Licensed Structural Engineer to evaluate the load-carrying capacity of the affected bridge. The Structural Engineer's recommendation must be submitted to the Bureau of Bridges and Structures for concurrence and approval.

3.3.3.1 Routine Inspections – In-Depth Inspection Procedures

Although In-Depth Inspection procedures are not always necessary for all Routine Inspections, they must be employed when Routine Inspection procedures indicate that closer inspection is required to verify the existence or determine the extent of bridge deterioration/damage. Field inspection personnel should be prepared to utilize In-Depth Inspection procedures during the performance of all NBIS related inspections. Routine Inspections alone cannot always identify potential deficiencies and deterioration. These In-Depth Inspections need not necessarily require access to all areas of the bridge but should serve to assure the inspector that areas of potential concern have received the proper degree of inspection. Areas under expansion joints (beam ends, end cross frames or diaphragms, bearings, concrete bearing areas), web stiffeners (transverse and horizontal), cross frame connections, lateral bracing connections, vaulted abutments, and any other areas of the bridge that are not normally visible during a Routine

Inspection should receive increased attention. See Section 3.3.5.2 for a discussion on Common Problematic Details on Fracture Critical Members.

3.3.3.2 Routine Inspections – Structures over Waterways

When the water depth at a substructure unit is normally less than 4-feet (typically referred to as "shallow water conditions"), site conditions do not meet the "Basic Submergence Criteria" (See Section 3.3.4.1) and an Underwater Inspection is not required.

Condition of substructure units and the surrounding streambed below the waterline are typically determined by wading and probing during the Routine Inspection as required for the proper coding of Substructure Condition Rating (ISIS Item 60). If all waterway substructure units of a bridge are located in water that is normally less than 4-feet in depth, an Underwater Inspection is not required and the Underwater Inspection Interval (ISIS Item 92B) is left blank. If there are no known deficiencies or concerns with the substructure elements and the surrounding streambed, Special Inspections for monitoring the channel are not required.

If site conditions at the bridge indicate that there is a known deficiency or concern at one or more substructure units, the responsible Program Manager must determine how it should be monitored:

- During subsequent Routine Inspections at their normal interval; or
- By lowering the Routine Inspection Interval; or
- By initiating a Special Inspection to address each concern

If the Program Manager elects to initiate monitoring with a Special Inspection, the appropriate Special Inspection Type (ISIS Item 92C1) and Special Inspection Interval (ISIS Item 92C) must be determined for each deficiency or concern and entered in ISIS. See Figure 3.4.3-1, "Determining Methods for Assessment of Substructure Condition Below the Waterline" and Table 3.4.3 for options and recommended monitoring intervals.

When Special Inspections are initiated for waterway monitoring, the Special Inspection Report form (BBS SI-1) must be completed for each Special Inspection Type met. Information obtained during Special Inspections will be used for the coding of Substructure Condition Rating (ISIS Item 60). See Section 3.3.6.2, Special Inspections for Monitoring Substructure and Channel Conditions Below the Waterline.

For all bridges classified as Scour Critical (See ISIS Item 113), channel cross-sections, along the upstream and downstream fascias shall be taken for comparison with Initial Inspection baseline cross-sections at a maximum of every 5 years and after significant storm events as documented by an Alert from BridgeWatch (See Section 3.7.6). Additional cross-sections should be taken when conditions indicate significant changes from original construction or previous inspections. An elevation "grid" may be established for tracking local scour around individual substructure units.
Whether accomplished during a Routine Inspection or by a Special Inspection, the condition of substructure units and the streambed adjacent to those units below the waterline must be determined to verify that existing conditions do not compromise the safety of the structure. This need for inspection applies to all structures over water, including newer bridges that may have been designed to structurally accommodate an estimated scour depth determined by analysis. Figure 3.4.3-1 illustrates the use of the various inspection types referred to in this Section.

3.3.4 Underwater Inspections

Bridges that meet the Basic Submergence Criteria (See Section 3.3.4.1) require an Underwater Inspection. NBIS regulations require these bridges to have written inspection procedures which clearly identify the location of all underwater elements and detail inspection methods and equipment to be employed. This information is to be maintained in the Bridge File and to be available to the inspection Team Leader for each inspection.

As described in the Bridge Inspector's Reference Manual (BIRM), an Underwater Inspection for all bridges meeting the Basic Submergence Criteria shall include the development of an Underwater Inspection Plan (BBS UIP) for inspecting each

substructure unit. The Underwater Inspection Plan shall include the following, as applicable:

- A plan sheet locating each substructure unit that qualifies for an Underwater Inspection
- Inspection records from previous Underwater Inspections
- Initial Inspection baseline stream cross-sections and all subsequent cross-sections taken during past Underwater Inspections
- Detailed inspection procedures to be followed for each substructure unit
- Equipment required to complete the inspection

Procedures for inspecting the substructure units may vary, depending on weather, stream level, or stream current. Inspection history will assist in determining preferred time periods when conditions are usually most conducive for conducting an inspection.

In addition to assessing the condition of the substructure elements, waterway inspections are conducted to create a record of the existing channel conditions adjacent to the bridge. Conditions such as channel opening width, depth at substructure elements, channel cross-sections, water flow velocity, and channel constriction and skew should be noted and compared to previously recorded conditions. In addition, when justified to track local scour conditions near substructure units, a streambed elevation “grid” may be established.

For all bridges requiring an Underwater Inspection, channel cross-sections along the upstream and downstream fascias shall be taken for comparison with Initial Inspection baseline cross-sections and previous inspection data with each Underwater Inspection. Current waterway inspection data should be plotted against previous inspection data in order to identify channel changes. This “tracking” of channel change over time is an important step in ensuring the safety of the bridge. Over time, vertical changes, due to either degradation or aggradation processes, or horizontal alignment changes, due to lateral migration of the channel, could result in foundation undermining, bridge overtopping, or even collapse of the structure.

For bridges that are located in low-flow or no-flow conditions, such as in lakes, ponds, or lagoons, or in controlled pool conditions above locks and dams, the requirement for stream cross-sections may be waived, at the discretion of the responsible Program Manager, Local Program Manager, and State Program Manager. Justification for waiving this requirement must be documented in the Underwater Inspection Plan and kept with the Bridge File.

3.3.4.1 Inspection Methods for Assessing Substructure Conditions Below Waterline

As stated in the definition, an Underwater Inspection is performed when structural elements below the waterline cannot be readily accessed using simple procedures, such as wading and probing in order to determine substructure conditions. Based on observations and knowledge of the bridge site, the District/Area Program Manager, the Central Program Manager or the Agency Program Manager is responsible for determining which substructure units can be waded and which units cannot be waded. If all units can be waded, an Underwater Inspection is not required. The inspection of the shallow water units shall be as stated in Section 3.3.3.2, Routine Inspections – Structures over Waterways. All units that meet the "Basic Submergence Criteria" stated below shall be inspected by the requirements in this Section.

> Basic Submergence Criteria: When water is normally 4-feet or more in depth or the combined depth of mud makes it unsafe to wade in normal chest waders at a substructure unit, site conditions meet the "basic submergence criteria" requiring an Underwater Inspection. Underwater conditions at these substructure units typically cannot be determined by wading and probing, and inspections require the use of a boat, sonar depth finder, or diving to determine existing conditions.

Bridges that have one or more substructure units located in a depth of water meeting this criteria are coded in ISIS as requiring an Underwater Inspection by entering an Underwater Inspection Interval (ISIS Item 92B) and all Underwater Inspected Substructure Units (ISIS Item 93B8) in ISIS. When performing Underwater Inspections, inspectors should be aware of which units were entered for ISIS Item 93B8 to ensure that their efforts are appropriately directed.

If site conditions at the bridge indicate that there is a known deficiency or concern at one or more substructure units, the responsible Program Manager must determine how it should be monitored:

- During subsequent Underwater Inspections at their normal interval; or
- By lowering the Underwater Inspection Interval; or
- By initiating a Special Inspection to address each concern

If the Program Manager elects to initiate monitoring with a Special Inspection, the appropriate Special Inspection Inventory Type (ISIS Item 92C1) and Special Inspection Interval (ISIS Item 92C) must be determined for each deficiency or concern and entered in ISIS. See Figure 3.4.3-1, "Determining Methods for Assessment of Substructure Condition Below the Waterline" and Table 3.4.3 for options and recommended monitoring intervals.

When Special Inspections are initiated for waterway monitoring, the Special Inspection Report form (BBS SI-1) must be completed for each Special Inspection Type met. Information obtained during Special Inspections will be used for the coding of Substructure Condition Rating (ISIS Item 60). See Section 3.3.6.2, Special Inspections for Monitoring Substructure and Channel Conditions Below the Waterline.

If there are no known deficiencies or concerns with the substructure elements and the surrounding streambed, a Special Inspection for monitoring the channel is not required.

The procedures used for determining the need for an Underwater Inspection are the same for new structures, which have been designed for anticipated scour, and older structures, which were designed prior to the development of procedures for estimating scour. Figure 3.4.3-1 illustrates the use of the various inspection types referred to in this Section.

3.3.4.2 Procedures for Underwater Inspections

A typical Underwater Inspection should evaluate the substructure units and adjacent streambed areas utilizing procedures considered appropriate by the District/Area Program Manager, the Central Program Manager, or the Agency Program Manager.

Streambed cross-sections shall be obtained during each Underwater Inspection for comparison to initially established baselines and to previous inspection data. Procedures utilized for an Underwater Inspection shall include the following as deemed appropriate for a particular bridge site:

- Visual observation of the channel at, and adjacent to, the substructure units.
- Manual probing of the channel bottom and/or substructure footing at, and adjacent to, the substructure units to identify areas of concern or to establish channel bottom elevations.
- Probing of the substructure walls below the waterline for damage.
- Recording of the channel bottom elevations with depth finding sonar at, and adjacent to, the substructure units, as well as at cross sections just upstream and downstream from the bridge.
- Visual observation of the substructure units to detect possible abnormalities in elevation or attitude.
- Observation of conditions below waterline by certified divers.

When the water depth is too great or site conditions prohibit an inspector from adequately determining the condition of a substructure unit by visual means or probing, a diving inspection will be required.

All procedures used for accomplishing the Underwater Inspection are recorded in ISIS as Item 93B4, “Underwater Inspection Method”. As bridge deficiencies are discovered or suspected, more thorough evaluation techniques should be employed. These may include surveying measurements to determine the elevation and attitude of substructure units or obtaining soil borings. The findings of inspections are to be recorded on the Bridge Inspection Report form for Underwater Inspections (BBS-BIR-UW 1), and an “Underwater Appraisal Rating” (ISIS Item 93B1) is to be entered in ISIS.

3.3.4.3 Effect of Conditions Below Waterline on Substructure Rating

The findings from Underwater, Routine, and Special Inspections should be taken into account in determining the Substructure Condition Rating (ISIS Item 60). Condition of bridge elements below the waterline should be included during the evaluation of the

substructure as part of each Routine Inspection. Inspectors should take advantage of low water conditions during Routine Inspections to observe elements below the waterline, especially those elements that would normally receive an Underwater Inspection and are currently accessible due to environmental circumstances. The performance of Underwater Inspections at intervals less than 60 months is encouraged when resources are available and environmental circumstances are favorable.

Only observed or historical scour is considered when determining a Substructure Condition Rating (ISIS Item 60). Calculated scour, which is an analytically derived estimate of the depth to which the channel could be eroded during an extreme event, is only considered when determining the coding for Scour Critical Evaluation (ISIS Item 113). Scour Critical Evaluation is unrelated to Substructure Condition unless significant scour has actually occurred at the bridge.

3.3.4.4 Determining Safe Conditions for Standard Diving Inspections

IDOT policy for safe diving inspections requires that certain field conditions must be met before allowing a dive team to enter the water.

- Diving Inspections shall be scheduled to avoid unsafe waterway conditions. Prior research shall be conducted to evaluate the best time of year to make a dive. Every effort shall be made to schedule Diving Inspections for periods of low flow and/or low water levels when diving inspections can be safely performed in accordance with IDOT Policy and FHWA guidance. Dive Teams shall research the site conditions from the office before traveling to the site to make sure water levels are in a safe condition for diving.
- Upon arrival at the bridge, the site and waterway conditions shall be assessed with a formal Job Hazard Analysis to determine if an Underwater Inspection by a diving team can be safely performed. If the conditions are unsafe for diving, IDOT shall be notified immediately.
- With IDOT approval, Underwater Acoustic Imaging may be performed at unsafe bridge sites to preliminarily evaluate the bridge prior to the NBIS compliance Underwater Inspection Interval date. The approved types of Acoustic Imaging equipment are Sector Scanning Sonar, Mechanical Scanning Sonar, and Multibeam Sonar. Underwater Inspection Remarks

(ISIS Item 93B2) shall have a comment added stating that Acoustic Imaging was done without diving until diving could be rescheduled due to unsafe diving conditions. The Dive Team shall reschedule the dive as soon as conditions are safe.

- FHWA does not accept sonar evaluations for Underwater Inspections as a substitute for diving, even in situations where the Underwater Inspection cannot be safely performed by divers. However, FHWA recognizes that safety of the diving inspectors and adherence to policies are necessary when conditions are unfavorable. Full documentation of the conditions and reasons why sonar inspection were employed should be included in the Underwater Inspection Report.

Current	Depth	Special Conditions	Unsafe Conditions - Underwater Imaging Procedures to be Used
> 4.0 fps	Any Depth	None	Unsafe conditions
3.0 to 4.0 fps	>30 ft	None	Unsafe conditions
	Any Depth	Hazardous Debris Present at Dive Site	Unsafe conditions
	Any Depth	Channel Bottom Unstable	Unsafe conditions
All flow velocities	>99 ft	None	Unsafe conditions
	> 50 ft	Water Temp < 35 deg. F.	Unsafe conditions

Table 3.3.4.4: IDOT Criteria for Defining Unsafe Conditions for Underwater Diving Inspections

3.3.4.4.1 IDOT Expectations for Routine Diving Inspection Team

A typical diving inspection team should include:

- Dive Team Size: 3 or 4 person team including an IDOT approved Team Leader who is also an Illinois Licensed Structural Engineer and be at the site 100% of the inspection.
- Standard dive equipment without hot-water suits or a hyperbaric chamber on site
- Commercial scuba or surface-supplied air in accordance with OSHA Dive Standards

- All dive team members are required to be certified divers and have taken NHI "Underwater Bridge Inspection" Course FHWA-NHI-130091 or NHI "Safety Inspection of In-Service Bridges" Course FHWA-NHI-130055
- Appropriate sized boat (typically less than 25 feet in length)

In addition, diving consultants may have their own requirements.

3.3.4.4.2 Procedures for Underwater Diving Inspections

The following procedures should be performed during an underwater diving inspection:

- Visual and tactile inspection of 100% of the underwater portions of the substructure units (Level 1)
- Provide measurements of pitting and damage of each substructure unit.
- Provide a complete report with topside photographs, diagrams, and underwater photographs necessary to adequately describe conditions and deficiencies found at the water surface and below, and anything above the waterline that would be hidden from an inspector not diving.
- Reports will include scope of work, description of the structure, method of investigation, existing site conditions, structure conditions with elevation views of units showing damage and streambed elevations, streambed probing information at each unit, streambed elevation grid at 25 ft. intervals out to 50 ft. from each unit, streambed cross-sections at both fascias and at 100 ft. upstream and downstream, Underwater Inspection Report form (BBS-UW-1) and anything else as required by the Bureau of Bridges and Structures.
- The reports shall be signed and sealed by an Illinois Licensed Structural Engineer.
- Inspection schedules will be sent to the Bureau of Bridges and Structures and the United States Coast Guard a minimum of two weeks in advance of the inspection.
- IDOT shall inform the Illinois State Police of the inspection.

For Local Agency structures, the Agency Program Manager will set the requirements of the Underwater Diving Inspection for each bridge, but they should generally follow the

requirements for State structures above. The Agency Program Manager is responsible for coordination with the waterway authority and local law enforcement.

3.3.5 Fracture Critical Member Inspections

Federal regulations provide the following definition:

> Fracture Critical Member: A steel member in tension, or with a tension element, whose failure would probably cause a portion of or the entire bridge to collapse.

Based on the above definition, Fracture Critical Member Inspections are performed on steel bridge tension members and tension components of members whose failure could result in collapse of the bridge or a portion of the bridge. These inspections consist of arm's length investigations of all fracture critical members contained within the structure. The primary method for detecting cracks in steel members is a Hands-On visual inspection. Detailed guidelines for identifying and inspecting fracture critical members are provided in the FHWA publication, "Inspection of Fracture Critical Bridge Members" (FHWA-IP-86-26). (See Appendix A3-2)

NBIS requirements specific to bridges containing Fracture Critical Members include:

- Inspection records must identify the locations and include a description of all Fracture Critical Members.
- An inspection frequency must be specified for Fracture Critical Members. The FHWA Coding Guide states the maximum frequency between Fracture Critical Member Inspections is 24 months. See Section 3.4.4 for requirements for reduced intervals.
- Procedures for inspection of Fracture Critical Members must be identified prior to the inspection.

As described in *The Manual for Bridge Evaluation*, a Fracture Critical Member Inspection of steel bridges should include the development of a plan for inspecting such members. The Fracture Critical Member Inspection Plan should identify the inspection frequency and procedures to be used. The frequency of inspection should be in accordance with the NBIS and Section 3.4.4 of this manual. The inspector should be in a position to see at least one surface of all member parts, all sides when accessible, and to look along all welds attaching the members. This may require that critical areas be specially cleaned prior to or during the inspection. Additional lighting and magnification may also be

required to facilitate the Fracture Critical Member Inspection. Other non-destructive testing procedures (as described in Section 3.5) may be used at the discretion of the Bridge Owner, Program Manager, or Team Leader. Photographs and sketches should be made of the bridge member defects, and on-site comparisons of the photographs and sketches should be made during subsequent Fracture Critical Member Inspections. Where the fracture toughness of the steel is not documented, testing may be needed to determine the threat of brittle fracture at low temperatures. Consult with the Bureau of Bridges and Structures before taking samples for testing.

Every fracture critical structure shall have a sketch identifying the Fracture Critical Members and documented inspection procedures in the Bridge File, as required by the NBIS. IDOT requires that a Fracture Critical Member Inspection Plan be included in the Bridge File for every fracture critical bridge. A Fracture Critical Member Inspection Plan template is available in Appendix A3-5 to aid in the development of the Fracture Critical Member Inspection Plan. It is the responsibility of the District/Area or Agency Program Manager to ensure that the Fracture Critical Member Inspection Plan is developed, included in the Bridge File, and updated as needed.

As part of the development or review of the Fracture Critical Member Inspection Plan the Program Manager shall verify that any active FHWA Technical Advisories that are applicable to the bridge, or its components, are included in the Fracture Critical Member Inspection Plan. All FHWA Technical Advisories are located at the following address: http://www.fhwa.dot.gov/techadvs.htm

The following items are required to be included in the Fracture Critical Member Inspection Plan for each bridge:

- Sketches as necessary to identify Fracture Critical Members
- Description of inspection procedures for the Fracture Critical Members. Include any specific inspection requirements (specific measurements, NDT, access equipment required, etc.).

A table listing the Fracture Critical Members, and identifying the Fatigue Sensitive Details (FSDs) for each Fracture Critical Member is recommended. (See Appendix A3-6 for the table of AASHTO LRFD Fatigue Categories)

When documenting and recording cracks or other deterioration during Fracture Critical Member Inspections, several items of information should be noted:

- The general location of the crack or deterioration with respect to the member should be recorded, as well as the exact location of the member with respect to the entire bridge. Any noticeable conditions of the crack when exposed to live load should be documented, such as lengthening, opening and closing, and visible distortion.
- The member should be labeled in the field using paint or other permanent markings. The ends of all cracks should be marked, and the date should be identified. It is important to compare the new markings with any previous markings, if any, and the inspection team should be sensitive to aesthetics at prominent areas.
- Detailed sketches and photographs of cracking and other deterioration should be provided showing the orientation, length, width, depth and end of crack. A close–up view should be provided, as well as a general view of the member from the same perspective to show context, showing all sides of the deteriorated area.
- The inspection team should document dimensions and details of the member containing the crack. The general condition at the location of the problematic detail should be noted, including corrosion and section loss, dirt and debris, traffic impact and steel type (if available).

3.3.5.1 Identifying Bridges with Fracture Critical Members

All bridges requiring a Fracture Critical Member Inspection are identified, by the Bureau of Bridges and Structures with the assistance of the applicable Program Manager, in the Fracture Critical Member Inventory within ISIS. In order for a bridge to be included in the Fracture Critical Member inventory, the Bureau of Bridges and Structures must enter a member code in ISIS for Fracture Critical Bridge Type, Number of Spans and Number of Members (ISIS Item 92A1, 92A2 and 92A3). After the Bureau of Bridges and Structures has provided ISIS with these codes, inspection related information for the fracture critical members may be entered into ISIS (ISIS Items 92A, 93A, 93A1, 93A2, 93A3, 93A4, 93A5, and 93A6). Documentation of members identified as fracture critical members

(plans with members highlighted etc.) should be kept in the Bridge File and should be available to inspectors performing the Fracture Critical Member Inspections.

Only load path redundancy is to be considered when identifying Fracture Critical Members. Note that while the presence of structural redundancy and internal redundancy may reduce the consequence of the failure of an Fracture Critical Member, these types of redundancy are not to be considered when identifying Fracture Critical Members. For a structure to be considered load path redundant it must have three or more primary load carrying members between supports.

The Bridge Inspector's Reference Manual defines redundancy as follows:

> Load Path Redundancy: Bridge designs that are load path redundant have three or more main load-carrying members or load paths between supports. If one member were to fail, load would be redistributed to the other members and bridge failure would not be expected. Bridge designs that are non-redundant have two or fewer main load carrying members or load paths.
>
> Structural Redundancy: Most bridge designs, which provide continuity of load path from span to span, are referred to as structurally redundant. Some continuous span two-girder bridge designs are structurally redundant. In the event of a member failure, loading from that span can be redistributed to the adjacent spans and total bridge failure may not occur.
>
> Internal Redundancy: Internal redundancy is when a bridge member contains several elements which are mechanically fastened together so that multiple load paths are formed. Failure of one member element would not cause total failure of the member.

Fracture Critical Members can have either all or part of their cross section in tension. Steel members that are subjected to calculated tension and are not part of a load path redundant system are to be considered fracture critical members. Floorbeams are considered fracture critical when their spacing exceeds 15 feet or the floorbeam supports other longitudinal or flared beams, girders, or stringers.

Some common fracture critical bridge types include, but are not limited to, the following:

- One- or two-girder systems (I-girder or box girder)
- Suspension systems with eyebar components
- Steel pier caps and cross girders
- Two-truss systems
- Steel tied arches
- Pin and hanger connections on two- or three-girder systems
- Bascule/Lift bridges with two primary girders or two primary trusses

Below are the ISIS codes for all Fracture Critical Bridge Types:

ISIS Code	Description – ISIS Item 92A1
A1	Two Girder System -Suspension Link and Pin
A2	Two Girder System - Suspension Single Pin
A3	Two Girder System-Tension Flanges of Riveted or Bolted Plate Girders
A4	Two Girder System-Bearing Seat of Suspended Spans
A5	Two Girder System-Tension Flange of Rolled Beam
A6	Two Girder system-Tension Flanges of Welded Plate Girders
A7	Two Girder System-Tension Flanges of Lattice Truss Web Girders
B1	Truss System-Eyebar and Pin Tension Members
B2	Truss System-Simple Span Welded Truss Tension Members
B3	Truss System-Hanger Link and Pin of Suspended Trusses
B4	Truss System-Single Element Tension Members
B5	Truss System-Simple Span Riveted or Bolted Tension Members
B6	Continuous Truss System-Welded, Riveted or Bolted Tension Members
C1	Suspension Bridge-Cables
C2	Cable Stayed-Cables
D1	Tied Arches-Welded Box Ties
D2	Tied Arches-Riveted or Bolted Box Ties
D3	Tied Arches-Stiffened Girders
E1	Framed Steel Substructures-Welded or Rolled Pier Cap
E2	Framed Steel Substructures-Riveted or Bolted Pier Cap
E3	Framed Steel Substructures-Welded or Rolled Pier Column
E4	Framed Steel Substructures-Riveted or Bolted Pier Column
F1	Longitudinal Box Beam-Single Welded Box
F2	Longitudinal Box Beam-Single Riveted or Bolted Box
F3	Double Box Beam-Welded, Riveted, or Bolted
X1	Bascule
X2	Floorbeams Supporting Other Steel Members or Spacing > 15’
X3	Cross Frames or Transfer Beams
X4	Other

Table 3.3.5.1: Fracture Critical Bridge Types

3.3.5.2 Common Problematic Details on Fracture Critical Members

It is important to note that problematic details may exist on a variety of bridges, such as steel girder, frame, truss or arch superstructure configurations. Problematic details may also exist on substructure components. The following problematic details can lead to cracking:

- Triaxial constraint
- Intersecting welds
- Welded Cover plates
- Suspended spans
- Field welds on patch and splice plates
- Intermittent welds
- Details prone to out-of-plane bending (small web gaps, diaphragm connection plates that aren't attached to flanges)
- Improperly installed or spliced back-up bars
- Tack welds and poor quality welds

More information about these problematic details and procedures for their inspection are described in considerable detail in the following documents (See Appendix A3-2):

- *Inspection of Fracture Critical Bridge Members* (Report No. FHWA-IP-86-26)
- *Bridge Inspector's Reference Manual*
- *The Manual for Bridge Evaluation*
- *Course material from FHWA-NHI-130078 "Fracture Critical Inspection Techniques for Steel Bridges"*

Fatigue-prone details shall be given special attention as part of an arm's length visual inspection during Fracture Critical Member Inspections. Bridge inspectors should be trained to identify fatigue-prone details. The inspection of fatigue-prone details may include non-destructive testing.

Fatigue cracks may occur at stress concentrations, where the rigidity of the member changes. Examples of such locations include connection details, damaged components, material flaws, changes in member cross-section, welds, corrosion-notched sections or a combination of these features.

Common connection details have been identified and have been assigned a fatigue stress category, as presented in *AASHTO LRFD Bridge Design Specifications*, Table 6.6.1.2.3-1 (See Appendix A3-6). Category E' details generally have the shortest fatigue life and are most prone to fatigue cracking. The susceptibility of the detail to fatigue cracking decreases from Category E' to Category A. Problems associated with these details are often related to weld terminations and weld defects. Tack welds, plug welds, and other welds made in the field are also susceptible to fatigue cracking.

Bridges which are known or suspected to have been fabricated with Grade 100 ksi ASTM A514 Steel (also known by several different proprietary names such as "T1", "NAXTRA" and others; or may be designated as "Quench and Tempered (Q&T) Steel" or Heat-Treated Steel on the plans) require special inspection procedures and considerations. FHWA Technical Advisory 5140.32 (See Appendix A3-2), "*Inspection of Fracture Critical Bridges Fabricated from AASHTO M270 Grade 100 (ASTM A514/A517) Steel*", provides recommendations regarding the inspection and treatment of such structures. This Technical Advisory addresses issues found with welds, particularly butt welds, connecting this type of steel. It does not recommend re-inspection of bridges that have been previously properly inspected and maintained. Rather it recommends a review of the inspection records to ensure that any components fabricated with this type of steel have been regularly and appropriately inspected and that any critical findings identified have been properly addressed. Although the Department anticipates very few such structures, it is important to identify bridges containing this type of steel and to follow the recommendations of this Technical Advisory.

3.3.5.3 Recording Fracture Critical Member Inspections

All Fracture Critical Member Inspections must be reported using the Fracture Critical Member Inspection Report (BBS-BIR-FC1) form. New and rehabilitated fracture critical bridges shall receive an initial Fracture Critical Member Inspection within 90 days of opening to traffic to ensure that no cracks or discontinuities have initiated in any Fracture Critical Member due to faulty fabrication, substandard construction or inappropriate design details.

3.3.5.4 Identifying Misclassified Bridges

Team Leaders are responsible for identifying bridges that have been misclassified as not being fracture critical. Local agencies should also survey their inventory for any structures having characteristics which previously may have excluded them being reported as fracture critical. If any structures are identified, notify the District/Area Program Manager or Agency Program Manager and the State or Local Program Manager. Inventory information for ISIS Items 92A1, 92A2 and 92A3 should be provided. The Illinois Structure Information and Procedure Manual should be consulted for additional information on reporting fracture critical members.

3.3.5.5 Fracture Critical Concerns for Gusset Plates

3.3.5.5.1 Gusset Plates - Initial Inspection for Load Rating

The Federal Highway Administration (FHWA) and the Illinois Department of Transportation (IDOT) have published documents providing guidance on the initial inspection and load rating of gusset plates on non-load-path-redundant steel truss bridges. IDOT issued All Bridge Designers (ABD) Memorandum 10.2, dated May 11, 2010, "*Load Rating Guidance for Bolted and Riveted Gusset Plates in Steel Truss Bridges*," which can be viewed at http://www.idot.illinois.gov/Assets/uploads/files/Doing-Business/Memorandums-&-Letters/Highways/Bridges/ABD-Memos/ABD102.pdf. This memorandum references FHWA Technical Advisory T5140.29, which may be found at http://www.fhwa.dot.gov/bridge/t514029.cfm, and strongly encourages bridge owners to check the capacity of gusset plates.

The first step in determining the capacity of gusset plates is inspection. Current inspection guidelines provide that all gusset plates joining main load-carrying members must have a Hands-On Inspection. This includes compression and tension members, but not connection plates of secondary members. For any structures containing gusset plates that have not been assessed and load rated, the Department requires performing a Hands-On Inspection of all gusset plates at or before the next Fracture Critical Member Inspection or Routine Inspection.

The full, non-corroded gusset plate thickness, as well as the overall height and width, should be measured for calculation purposes and for comparison to the original design and shop plans. Any areas of section loss should be measured, and the quantity should be calculated and documented.

Severe section loss or any signs of warping or buckling should be documented and immediately reported to the District or Agency Program Manager and the State or Local Program Manager.

When documenting gusset plate section loss, a photo should be taken of both sides of all gusset plates (i.e., typically both sides of both gusset plates (minimum 4 photos) at each panel point location). Photos of the interior face of the gusset plates may be difficult to take and/or may not show the entire interior surface, but they should still be taken.

The thickness of the gusset plate is critical in calculating its load-carrying capacity. In most cases, rudimentary methods (tape measure, ruler and straight edge, etc.) of measuring plate thickness do not provide measurements precise enough to accurately quantify section loss. FHWA Technical Advisory T5140.31 (http://www.fhwa.dot.gov/bridge/t514031.cfm) recommends use of an ultrasonic thickness meter as the most appropriate method for measuring remaining plate thickness at locations of section loss and the full plate thickness at an uncorroded location.

Field measurements should be compared to the original design and shop plans if they are available. Any discrepancies should be documented and brought to the attention of the District or Agency Program Manager. If plans are not available, detailed drawings of the gusset plates should be made depicting the plate size, thickness, and bolt or rivet pattern and spacing. A digital imaging method was developed by the Oregon State University for the Oregon DOT and FHWA to measure gusset plate dimensions and rivet/bolt patterns through photographic records. That system can be found at: http://library.state.or.us/repository/2009/200903241458232/index.pdf

After the field inspection is completed, any structure not originally designed for current legal live loads or whose original dead load has changed, or any structure having gusset plates with section loss, should have a new load rating performed. A new load rating is not required if a previous load rating included the dead load changes or section loss. The capacity of the gusset plates should be determined and included in the load rating. Gusset plate capacities should also be considered when analyzing truss bridges for permit loads. A list of known steel truss structures potentially having gusset plates was sent to the IDOT District Bureaus of Local Roads and Streets for dissemination to Local Agencies. This list was not meant to be all inclusive; it only served as a starting point for Local Agencies to search their inventory for structures with bolted or riveted gusset plates.

Local Agencies are encouraged to utilize their own resources or consultants to perform the load ratings as necessary. The Department does not have the resources necessary to perform load ratings for all Local Agencies. Note that load ratings must be performed by or under the direct supervision of an Illinois Licensed Structural Engineer and must be signed and sealed by that Structural Engineer.

To assist with determining the load rating of gusset plates, guidelines are presented in FHWA Publication No. FHWA-IF-09014, entitled "*Load Rating Guidance and Examples for Bolted and Riveted Gusset Plates in Truss Bridges*." (See Appendix A3-2)

When completed, Local Agencies should submit documentation to IDOT, including detailed inspection reports and load rating computations. Any spreadsheet used for determining gusset plate capacities and any other software input files, such as AASHTOWare Bridge Rating, should also be submitted for use in evaluation of the load rating analysis. If the Local Agency is unable to perform the required load rating analysis, in-depth inspection information should be submitted to IDOT in a timely manner. Reduced size (11" x 17") copies of existing design and shop plans should be provided if available.

3.3.5.5.2 Gusset Plate Assessment During Fracture Critical Member Inspections

After the Hands-On gusset plate inspections and load ratings have been performed, as detailed in Section 3.3.5.5.1, future Fracture Critical Member Inspections will require continued assessment of all gusset plates. Copies of the initial and subsequent Hands-On gusset plate inspections should be consulted in order to locate areas of deterioration and concern. Each gusset plate will require Hands-On Inspection and thickness measurements to be taken to document and assess continued growth and expansion of section loss, initiation or growth of cracks, and development or increase in any plate distortion. The inspection record for each gusset plate must document all significant changes to previously identified areas of concern as well as any new areas identified with each new inspection.

The District/Area or Agency Program Manager shall determine if new inspection findings are significant enough to require structural analysis and load rating. Results of any Hands-On inspection that identifies significant changes to previously documented data should be reviewed by a load rating engineer to determine if a new load rating will be required. The District/Area or Agency Program Manager should consult with the Bureau of Bridges and Structures when determining the need for further analysis.

Copies of the inspection report, including a summary of all field measurements and photos shall be kept in the Bridge File. It is imperative that complete and accurate records are kept to chronicle the initiation and progression of gusset plate deterioration and the steps taken to repair or mitigate those findings.

All repairs, retrofits or member replacements that have been performed since the last Fracture Critical Member Inspection shall be documented in the bridge file. The condition of the work performed and a general assessment of its effectiveness in arresting or mitigating previous damage or deterioration shall be noted.

3.3.5.6 Non-Destructive Testing for Fracture Critical Member Inspections

When visual inspection alone is not sufficient for determining the condition of a Fracture Critical Member, Non-destructive Testing (NDT) may also be performed by qualified personnel to determine the condition of structural elements and components associated

with the fracture critical members. Through the use of NDT, an inspector can verify both the presence and extent of a crack or discontinuity. The NDT methods most frequently used in the field by IDOT are D-Meter Thickness Measurement (DM), Dye Penetrant Testing (DT), Magnetic Particle Testing (MT) and Ultrasonic Testing (UT). Inspectors should be trained in the use and limitations of the various methods of NDT. Basic procedures for performing DM, DT, MT and UT are provided in Section 3.5.

3.3.6 Special Inspections

Special Inspections are performed, in addition to the other NBIS inspections, to monitor a specific structural feature, deficiency or condition that must be monitored more often than Routine, Underwater, or Fracture Critical Member Inspection Intervals require. Special Inspections may be prompted by structural damage or deterioration, conditions affecting the stability of the structure, or for other reasons at the discretion of the responsible District or Agency Program Manager or the Bureau of Bridges and Structures. Some examples of concerns that may be cause for a Special Inspection are damage/deterioration to main load-carrying members, existing or potential scour, settlement/movement of substructure units or adjacent embankment, and structural details with histories of poor performance. Procedures used during these inspections should be adopted in accordance with the specific deficiency or condition to be monitored.

As described in *The Manual for Bridge Evaluation*, a Special Inspection can be scheduled at the discretion of the bridge owner or the responsible Agency Program Manager. For the first Special Inspection, a procedure must be developed to direct the inspection and to ensure that the required information is captured. Procedures will vary, but in general a Hands-On Inspection will be required for the Special Inspection, similar to the level of detail required for a Fracture Critical Member Inspection. The Hands-On Inspection may be supplemented by non-destructive testing in some cases. It is critical that these procedures are followed and documented from inspection to inspection in order to be able to compare the results and recognize trends in deterioration. The frequency of the Special Inspection should be established based on the severity of the known deficiency. Special Inspections are generally not sufficiently comprehensive to meet NBIS requirements for Routine Inspections. The IDOT Special Inspection Report (form BBS SI-1) shall be completed and entered into ISIS.

Special Inspections for Local Agency or other non-IDOT State Agency structures are typically initiated by or after consultation with the Local Bridge Unit of the Bureau of Bridges and Structures. The responsibility for performing and reporting the Special Inspection rests with the Agency Program Manager. Failure to comply with the inspection frequency and/or the established procedure for the required Special Inspection may result in posting, reduced posting, or closure of the bridge. The IDOT Special Inspection Report (form BBS SI-1) shall be completed and submitted to the District.

3.3.6.1 Recording and Performing Special Inspections

When a determination is made that a Special Inspection is necessary, the frequency of the Special Inspection shall be determined by the responsible Program Manager or as directed by the Bureau of Bridges and Structures, and recorded in ISIS as the Special Inspection Interval (ISIS Item 92C).

The type(s) of condition/feature requiring the Special Inspection is recorded in ISIS as the Special Inspection Inventory Type (ISIS Item 92C1) using the coding provided in the following table:

SPECIAL INSPECTION INVENTORY TYPE CODING (ISIS Item 92C1)	
Inventory Type Code	Description
A	Structural Damage/Deterioration - Steel Superstructure Elements
B	Structural Damage/Deterioration - Concrete Superstructure Elements
C	Structural Damage/Deterioration - Timber Superstructure Elements
D	Structural Damage/Deterioration - Steel Substructure Elements
E	Structural Damage/Deterioration - Concrete Substructure Elements
F	Structural Damage/Deterioration - Timber Substructure Elements
G	Underwater Condition Inspection – Debris and/or Erodible Soils
H	Reserved
I	Underwater Condition Inspection – Spread footings not adequately keyed into rock or protected from the effects of streambed scour.
J	Reserved
K	Underwater Condition Inspection – Scour Critical Evaluation Monitoring
L	Existing Streambed Scour - Adjacent to Spread Footing
M	Existing Streambed Scour- Adjacent to Pile Supported Footing
N	Existing Streambed Scour - Adjacent to Pile Bent Substructure Unit
P	Embankment Movement or Settlement
Q	Substructure Movement or Settlement
R	Pin & Link in Multi-Girder (Redundant) Bridge
S	Specifically Identified Problematic Structural Details
T	Decks
Z	Other

TABLE 3.3.6.1A: Special Inspection Inventory Type

The dates when the Special Inspection were initiated and rescinded are recorded in ISIS as the "Determination Date" (ISIS Item 92C6) and the Special Inspection Inventory "Close Date" (ISIS Item 92C3) respectively. The Agency that initiated the Special Inspection should be recorded in ISIS as "Initiated By" (ISIS Item 92C4). The Agency responsible for initiating the Special Inspection must determine a time frame for conducting the first Special Inspection by entering the "Inspect By Date" (ISIS Item 92C7). The actual date of the first Special Inspection is recorded as the "Special Inspection Date" (ISIS Item 93C).

In order to record information specific to the "Special Inspection Inventory Type Code" (ISIS Item 92C1) and to provide information relative to the conditions that initiated the need for a Special Inspection, comments should be entered for "Special Inspection Inventory Type Remarks" (ISIS Item 92C5).

The performance of each inspection is recorded by entering the date of the inspection in ISIS for "Special Inspection Date" (ISIS Item 93C) and the results of each inspection are recorded by entering a Condition Type Code in ISIS for "Special Inspection Condition Status" (ISIS Item 93C1) as shown in the following table:

SPECIAL INSPECTION CONDITION STATUS CODING (ISIS Item 93C1)	
Condition Status Code	Condition Description
0	Worsening Condition Indicative of Imminent Structural Failure (closure required until follow-up inspection by BBS inspection staff)
1	Progression of Deterioration or Worsening of Condition noted (immediate follow-up inspection by BBS inspection staff or District Bridge Maintenance Engineer required)
2	No Change in Condition Noted
3	Corrected Condition Noted (Special Inspection no longer required after verification of adequacy of corrected condition by appropriate IDOT personnel)
4	Feature determined to be in acceptable condition (Primarily for monitoring problematic structural details with no observable deficiencies)

TABLE 3.3.6.1B: Special Inspection Condition Status

Except when the Special Inspection Condition Status is coded as 2 or 4, the inspector must document the change in condition in ISIS by providing information for "Special Inspection Inventory Type Remarks" (ISIS Item 92C5).

It is imperative that personnel performing Special Inspections compare the conditions noted in the field to the conditions that initiated the Special Inspection. Inspection personnel must compare the conditions observed to the initial documentation (photographs, field notes, or survey data) of the Special Inspection. The comparison of

current conditions to initial conditions determines the proper coding for "Special Inspection Condition Status" (ISIS Item 93C1). When a Special Inspection Condition Status code of "1" or "0" is applicable, the Bureau of Bridges and Structures should be contacted immediately to determine if a site inspection is required and to discuss measures that must be taken to ensure safety.

The inspection team for the Special Inspection should be established by the Program Manager based on the specific requirements of the Special Inspection. The responsible Program Manager must emphasize to personnel performing the inspections that they are to compare observed conditions to the conditions that initiated the need for the Special Inspection. In some cases, a qualified Team Leader may not be required, provided the inspection team is fully instructed on what specific observations are needed. Personnel performing Special Inspections must be knowledgeable of the conditions that initiated the need for the inspections. The inspectors must understand, based on their observations, decisions will be made relative to the need for follow-up inspections or the need for traffic restrictions. Whenever possible, consecutive Special Inspections should be performed by the same inspection personnel to ensure sufficient site specific knowledge.

Observations made during Special Inspections are recorded as "Special Inspection Remarks" (ISIS Item 93C4). Form BBS-SI-1 should be utilized by personnel performing Special Inspections. The form must be accepted by means of the signature of an IDOT approved Program Manager. Photographs or other evidence are suggested to validate Special Inspection findings.

3.3.6.2 Special Inspections for Monitoring Substructure and Channel Conditions Below the Waterline

Special Inspections may be necessary to monitor known, suspected or potential deficiencies of a substructure unit or adjacent channel. The inspections are performed to verify that deficiencies do not exist, or to determine the extent to which previously identified deficiencies are affecting the substructure.

If site conditions at the bridge indicate that there is a known deficiency or concern at one or more substructure units, the responsible Program Manager must determine how it should be monitored:

- During subsequent Routine or Underwater Inspections at their normal interval; or
- By lowering the Routine or Underwater Inspection Interval; or
- By initiating a Special Inspection to address each concern

If the Program Manager elects to initiate monitoring with a Special Inspection, the appropriate "Special Inspection Inventory Type" (ISIS Item 92C1) and "Special Inspection Interval" (ISIS Item 92C) must be determined for each deficiency or concern and entered in ISIS. See Figure 3.4.3-1 "Determining Methods for Assessment of Substructure Condition Below the Waterline" and Table 3.4.3 for options and recommended monitoring intervals.

3.3.6.3 Special Inspections for Pin and Link Assemblies

Pin and link or pin only assemblies in girder/beam bridges that have been retrofitted with the stainless steel pins and Teflon bushings as shown in Section 1.11 of the Repair Section of this manual shall have a Special Inspection on a maximum interval of 48 months, preferably coinciding with the Routine Inspection. This inspection shall be completed as per Section 3.6. Any defects found in the pins or link plates shall be reported to the Bureau of Bridges and Structures immediately. The link assemblies shall be visually observed to verify they are functioning as intended. The link plates shall be measured as required to verify any section loss or cracks. Any crack in the link plates shall also be reported to the Bureau of Bridges and Structures immediately.

If a defect is found in the pin or a crack is found in a link plate, the inspection interval of the Special Inspection shall be changed as required by the Bureau of Bridges and Structures. If the assembly appears not to be functioning properly or section loss in the link plates is between 5% and 10% the Special Inspection interval shall be 24 months or less. If the loss is greater than 10% the interval shall not be greater than 12 months, and the Bureau of Bridges and Structures must be notified to perform a structural evaluation.

Pin and link or pin only assemblies in multi-girder/beam bridges that have not been retrofitted as described above shall have a maximum inspection interval of 24 months.

3.3.7 In-Depth Inspections

As described in *The Manual for Bridge Evaluation (See Appendix A3-2)*, an In-Depth Inspection is a close-up, Hands-On Inspection of one or more members above or below the water level to identify any deficiencies not readily detectable using Routine Inspection procedures. Traffic control and special equipment (such as under-bridge inspection equipment, staging and workboats) should be provided for access and safety, as needed. In addition, personnel with special skills (such as divers and riggers) may be required. Non-destructive field tests and other material tests may be used as needed to fully ascertain the presence and extent of any deficiencies.

Every bridge shall receive an In-Depth Inspection at least once every 6 years for bridges with normal 24 month inspection intervals, and at least once every 8 years for bridges with 48 month inspection intervals. These In-Depth Inspections need not necessarily require access to all areas of the bridge but should serve to assure the inspector that areas of potential concern have received the proper degree of inspection. Areas under expansion joints (beam ends, end cross frames or diaphragms, bearings, concrete bearing areas), web stiffeners (transverse and horizontal), cross frame connections, lateral bracing connections, fixed bearings, and any other areas of the bridge that are not normally visible during a Routine Inspection should receive special attention.

An In-Depth Inspection can replace a Routine Inspection, be scheduled independently, or be scheduled as a follow-up to a Damage Inspection, Load Rating Inspection, or an Initial Inspection.

An In-Depth Inspection may include a load rating to assess the residual capacity of the members, depending on the extent of deterioration or damage. In addition, non-destructive load tests may be conducted to assist in determining the safe bridge load-carrying capacity.

On typical bridges, In-Depth Inspections should include all critical elements of the structure. For large or complex bridges, In-Depth Inspections may be scheduled separately for defined portions of the bridge or for specific groups of elements, connections or details that can be efficiently addressed by the same inspection procedures. If this option is chosen, then each defined bridge segment, each designated group of elements or both should be clearly identified in the Bridge File and each should be assigned a frequency of re-inspection. It is especially important for an In-Depth Inspection that the activities, procedures and findings be completely and carefully documented.

3.3.7.1 Inspection of Major Bridges by the Bureau of Bridges and Structures

The Bureau of Bridges and Structures and qualified consultant teams, under the direction of the Central Program Manager, conduct In-Depth Inspections for designated "Major Structures". Included are all structures physically maintained by IDOT over the Mississippi, Ohio, Wabash and Illinois Rivers, as well as a few other specially designated structures. The inspections of these major structures typically require extensive traffic control and special equipment (i.e. under-bridge inspection equipment, staging and/or work boats).

Each bridge receives an In-Depth Inspection, and when applicable, each bridge receives a Fracture Critical Member Inspection, an Underwater Inspection, and stream/river cross sections are taken for comparison to previous inspection data. These inspections provide documentation of deficiencies for use in determining the need for immediate repairs or future rehabilitation of the structure. See Appendix A3-8 for a listing of these structures.

For bridges classified as Complex Bridges (See Section 3.3.10), the Bridge File for each bridge shall include a detailed Complex Bridge Inspection Plan.

In addition to the In-Depth Inspections, the Bureau of Bridges and Structures coordinates periodic jointly conducted cursory visual inspections of border bridges with adjacent states to mutually determine maintenance, repair and rehabilitation needs. District Program Managers are encouraged to participate during In-Depth Inspections

and should be represented during the mutual border bridge inspections conducted with the adjacent state's Department of Transportation. The District Program Manager may be called upon to oversee periodic Special Inspections or to monitor special problems related to the Major Structures when specialized equipment is not required.

3.3.8 Damage Inspections

A Damage Inspection is an unscheduled inspection performed to assess structural damage resulting from environmental factors or human actions. Personnel performing Damage Inspections shall include an Illinois Licensed Professional or Structural Engineer and an Illinois approved Team Leader or Program Manager.

3.3.8.1 Damage Inspections Policy

Damage Inspections are performed on an emergency basis to assess a bridge for damage as a result of an event that results in a sudden change in the structural capacity or stability of a bridge (fire, collision, scour, severe or extensive section loss, steel cracks, etc.). The inspection shall be performed by District staff, Bureau of Bridges and Structures staff, or an Illinois Licensed Structural Engineer who is an IDOT-approved Team Leader or Program Manager.

The scope of a Damage Inspection should be sufficient to determine the need for emergency load restrictions or closure of the bridge to traffic, and to assess the level of effort necessary to repair the damage. The level of effort required for a Damage Inspection may vary significantly, depending upon the extent of the damage. If major damage has occurred, the inspection team must evaluate the damaged members, determine the extent of section loss, take measurements for misalignment of members, and check for any loss of foundation support. It may be desirable to make on-site calculations to establish emergency load restrictions. A Damage Inspection may be supplemented by a timely Load Rating Inspection to document verification of field measurements and calculations. In addition, a more refined analysis may be warranted to establish or adjust interim load restrictions or required follow-up procedures.

Communication of findings between the field inspection team and the State Program Manager are very important for this type of inspection. Photos, sketches, and detailed

descriptions documenting defects that potentially impact the load-carrying capacity of the bridge should be transmitted from the field immediately to the State Program Manager.

Any calculations or analysis performed as a result of a Damage Inspection must be performed under the supervision of and sealed by an Illinois Licensed Structural Engineer and submitted to the Bureau of Bridges and Structures for review and concurrence.

3.3.8.2 Damage Inspections for State Maintained Structures

Damage Inspections are typically conducted by the Bureau of Bridges and Structures for state owned structures. However, the inspection may be performed by District personnel, at the direction of the District/Area Program Manager with guidance from the Bureau of Bridges and Structures, for the measurement and recording of existing conditions. These inspections include measurement of main structural members to obtain detailed documentation of member size, section loss, structural defects, and member deflections/distortions that may be present. Traffic control and special equipment are often necessary to accomplish these inspections.

The results of these inspections, for state owned structures, are reviewed by the Structural Ratings and Permits Unit in the Bureau of Bridges and Structures, which performs an analysis to determine the load-carrying capacity of each inspected structure. After completing the analysis, the Bureau of Bridges and Structures will provide the Region/District with documentation of the inspection and the results of the structural rerating. The documentation provided to the Region/District will include field data and photographs, recommended revisions to condition ratings, updated Inventory and Operating Ratings, and recommendations for load restrictions and/or Special Inspections.

3.3.8.3 Damage Inspections for Local Agency Structures

For Local Agency structures, Damage Inspections are performed by the Local Bridge Unit of the Bureau of Bridges and Structures.

Local Agencies also have the option of employing the services of a qualified Illinois Licensed Structural Engineer to perform Damage Inspections, calculate the load ratings and provide posting recommendations. The Structure Load Rating Summary sheet (Form BBS 2795) shall be included with the Load Rating and submitted to the Bureau of Bridges and Structures for review and approval.

3.3.9 Load Rating Inspections

A Load Rating Inspections are performed to investigate damage or deterioration in order to evaluate potential reductions in the live load carrying capacity. A Load Rating Inspection is performed by personnel that are trained to collect specific information required to perform a load rating analysis to determine the safe load carrying capacity of a bridge.

3.3.9.1 Load Rating Inspection Policy

The detailed criteria used to determine the need for a Load Rating Inspection is as follows:

- When significant deterioration in critical areas has occurred since the prior Routine Inspection, resulting in a reduction of the condition rating of the Superstructure (ISIS Item 59), Substructure (ISIS Item 60) or Culvert (ISIS Item 62) to a level of "4 or less" (poor condition) or when the condition rating of the Deck (ISIS Item 58) falls to “3”; or
- When there has been no recent condition rating reduction, but a structure is in a deteriorated state, a load rating reevaluation shall be performed at an interval determined by the Bureau of Bridges and Structures based on structure type and anticipated rates of deterioration; or
- In no case shall the reevaluation interval exceed 10 years. This shall apply to structures meeting the following criteria:
    - A condition rating of “4” (poor condition) or less has been assigned to the Superstructure, Substructure, or Culvert (ISIS Item 59, 60, or 62) or,

- A condition rating of “3” (serious condition) or less has been assigned to the Deck (ISIS Item 58).

3.3.9.1.2 Load Rating Inspections for State Maintained Structures

Load Rating Inspections are typically conducted by the Bureau of Bridges and Structures, Structural Ratings and Permits Unit for state owned structures. The inspections may be performed by District personnel, at the direction of the District/Area Program Manager with guidance from the Bureau of Bridges and Structures, for the measurement and recording of existing conditions. These inspections include measurement of main structural members to obtain detailed documentation of member size, section loss, structural defects, and member deflections/distortions that may be present. Traffic control and special equipment are often necessary to accomplish these inspections.

The results of these inspections, for state owned structures, are reviewed by the Structural Ratings and Permits Unit in the Bureau of Bridges and Structures, which performs an analysis to determine the load-carrying capacity of each inspected structure. After completing the analysis, the Bureau of Bridges and Structures will provide the Region/District with documentation of the inspection and the results of the structural rerating. The documentation provided to the Region/District will include field data and photographs, recommended revisions to condition ratings, updated Inventory and Operating Ratings, and recommendations for load restrictions and/or Special Inspections.

3.3.9.1.3 Load Rating Inspections for Local Agency Structures

Load Rating Inspections and load capacity calculations are performed by the Local Bridge Unit of the Bureau of Bridges and Structures as resources allow, following the guidelines for the “Bridge Load Carrying Capacity Rerating Program” originally presented in County Engineer/Superintendent of Highway Circular Letter # 96-11. Using the information in ISIS, the Local Bridge Unit monitors condition rating reductions for Local Agency bridges and automatically schedules structures for inspections to determine if the load-carrying capacity has been adversely affected.

In addition to the structures automatically scheduled for inspection, agencies may request an inspection and rerating of any structure at any time utilizing the "Local Agency Load Rating Request" form (BLR 06510). A copy can be obtained from the Public Partners area of the IDOT website at http://www.idot.illinois.gov/Assets/uploads/files/IDOT-Forms/BLR/BLR%2006510.docx . (See Appendix A3-2)

When the Bureau of Bridges and Structures cannot provide a Load Rating Inspection for an Agency within a reasonable time frame, the responsible Agency will be notified that they must retain the services of an Illinois Licensed Structural Engineer to perform Load Rating Inspection and evaluate the load-carrying capacity of the affected bridge and provide posting recommendations. The Structure Load Rating Summary sheet (Form BBS 2795) shall be included with the Load Rating and submitted to the Bureau of Bridges and Structures for review and approval.

3.3.10 Complex Bridge Inspections

The inspection of complex bridges presents many unique challenges for an experienced bridge inspection team. Complex bridges (defined below) represent a major capital investment in the bridge inventory and many times serve as the only major river crossing for many miles. Other complex bridges, typically bascule bridges, are key to efficient traffic flow in major urban areas. Complex bridges must receive a heightened degree of investigation and evaluation to preserve their continued service to the traveling public and protect the Department's investment.

IDOT has determined that the following bridge types are defined as Complex and will be inspected under the provisions and policies of this section:

- Suspension
- Cable-Stayed
- Movable – Bascule, Swing, and Lift

The National Bridge Inspection Standards (NBIS) require that the owner of each complex bridge must develop and maintain a detailed Complex Bridge Inspection Plan, specific to each bridge. The plan must be kept in the official Bridge File and be accessible and available for the inspection team to consult prior to each inspection.

3.3.10.1 General Complex Bridge Inspection Procedures

A comprehensive Complex Bridge Inspection Plan should provide a detailed outline for conducting all aspects of the inspection process. The following is a brief outline for a detailed plan.

Team Members: The Program Manager should select an experienced inspection team, trained for the specific tasks required for the unique structure. The Team Leader should provide experience and guidance to the remainder of the inspection team. It is preferable that members of the team have previous experience inspecting the subject bridge type and are familiar with any past issues and concerns. The Team Leader should assign specific tasks for each member in order to conduct an efficient and thorough inspection.

Traffic Control: The Program Manager / Team Leader should coordinate the Complex Bridge Inspection Plan with the Department or Agency Traffic Operations, Maintenance, and Construction personnel in order to assure that the inspection operation, lane closures, or lane width restrictions do not interfere with other activities in the area. The inspection of a Complex Bridge will typically require an extensive Traffic Control Plan. The plan should detail timing and sequence of operations, including lane closure sequences, signage, flagman responsibilities, and coordination with movement of inspection access equipment.

Navigable Waterways: For bridges that cross navigable waterways, the Program Manager or Team Leader should coordinate the Complex Bridge Inspection Plan with the United States Coast Guard.

Access Equipment: A Complex Bridge Inspection will typically require use of a wide variety of access equipment, including under-bridge inspection cranes (snoopers), manlifts, boats, scaffolding, and ladders. The Complex Bridge Inspection Plan should coordinate availability of equipment and operators for the entire inspection. Access to enclosed areas should be documented, including box girder access doors, tower entrance doors, etc.

Inspection Equipment: A Complex Bridge Inspection will also require an extensive use of inspection tools and equipment in order to complete a thorough inspection of the structure. This could include survey equipment, hammers, scrapers, wire brushes, drills, cameras, sonar depth finders, and NDT equipment. If the bridge requires a Fracture Critical Member Inspection and/or an Underwater Inspection, the Team Leader and inspection team should consult the Bridge File for the Fracture Critical Member Inspection Plan and the Underwater Inspection Plan for additional information needed to complete the overall inspection of the bridge.

Documentation: A Complex Bridge Inspection will typically require a greater extent of documentation and should therefore be compiled into an Inspection Report. The Report should contain all inspection notes, photos, and findings in an organized narrative. It should contain an overall description of the structure, a table or listing of significant findings, and recommendations for both general maintenance and any needed repairs. The findings should be prioritized by importance and severity. Any defect of a structural member that could potentially affect the load carrying capacity of the structure must be reported immediately to the District/Area Program Manager or Agency Program Manager, and the State Program Manager. See Section 3.3.12 for details and requirements for a Critical Finding.

The specific Complex Bridge Inspection Plan for each Complex Bridge in the Inventory is stored with the structure's Bridge File.

For the purposes of this manual, the following is a short discussion about the general requirements for the inspection of complex bridges.

3.3.10.2 General Inspection Requirements for Suspension Bridges

A suspension bridge is typically comprised of a steel superstructure of beams, girders, and floorbeams supporting a riding surface, all suspended by cables or wires from two large multi-wire cables stretched over high towers and anchored in large concrete structures.

Deck Inspection: The deck, including any wearing surface should be inspected for signs of distress using appropriate procedures, such as chain drag, infrared thermography, ground-penetrating radar, etc. Deck elevations should periodically be surveyed and compared to original as-built plans and previous inspection reports for any marked changes. An inspection of the deck drainage system should be included.

Cable Inspection: The main cables of a suspension bridge are usually comprised of hundreds of individual wire strands, combined together to form the main cable. The cable is usually protected from the elements by a system of wire wrapping and a barrier coating of paint. The cables can also be wrapped in special waterproof fabric material. Inspection of the cables is typically restricted to a visual, hands-on procedure, concentrating on identification of any signs of potential problems with the protection system. Any signs of tearing or gouges that could allow intrusion of water should be documented. Areas surrounding the cable bands, areas around tower saddles, and entrances to the anchorages should be inspected thoroughly. The cable inspection should also document the condition of the safety handhold cable and its connections to the main cables.

A schedule shall be documented in the Complex Bridge Inspection Plan and followed for an In-Depth Inspection involving the use of Non-Destructive Evaluation (NDE) techniques and/or intrusive inspection, where a portion of the cable wrapping is removed and the wire strands are wedged apart allowing for both a visual and borescope inspection of individual wires.

Cable Anchorage: Consult the Confined Space Entry Plan before entering the anchorage structure. The inspection should note the overall condition of the anchorage house. The inspector should document the temperature and humidity both inside and outside the anchorage and should also document any sources of water intrusion into the anchorage building. The inspector should carefully inspect the condition of the cables as they pass through the anchorage walls and into the splaying (cable spreading) structure noting any signs of rust or deterioration.

Hanger cables: Hangers or suspenders should be thoroughly inspected for any signs of wear or fraying. Note any signs of rust, pitting, or section loss of the wires. Connections to the cable, typically at cable bands should be carefully inspected for signs of rust staining or water intrusion. Hanger cable connections to the superstructure, usually through lead filled sockets and mechanically fastened brackets should also be thoroughly inspected for signs of rust, pitting, section loss, or distortion.

Towers: Typically comprised of massive steel legs and bracing members, towers can rise hundreds of feet above the deck surface. A detailed plan for access and inspection of the tower members should be part of the overall plan. This may require hiring an experienced inspection team, trained in rope and free climbing techniques in order to gain access to the external components of the towers. A typical suspension bridge tower will have an internal system of ladders or stairs that gain access to the top of the tower. The inspection should include a complete documentation of the condition of all tower members, including the competence of the access ladder or stair structures. Proper operation of the tower aviation lighting and condition of their supports should also be noted.

Miscellaneous: The inspection plan should include a complete inspection of the structure's expansion joints, noting the opening and air temperature and any out-of-tolerance movements. Superstructure wind-tongue structures should be inspected, noting any areas of deterioration or section loss, and any defects in the operation of the system. Proper operation of navigation lighting and condition of their supports should also be noted.

3.3.10.3 General Inspection Requirements for Cable-Stayed Bridges

A cable-stayed bridge is typically comprised of a steel or concrete box or girder superstructure supporting a deck structure, all supported by a series of fanned or splayed high strength multi-strand cables, spanning from anchorages near the top of tall concrete or steel towers to the superstructure near deck level.

Deck Inspection: The deck of a cable-stayed bridge is typically concrete, either cast in place or comprised of precast concrete panels with a bituminous or concrete overlay wearing surface. In most designs, the deck of a cable-stayed bridge is always in compression. The inspection should note any distressed areas in the deck, including any signs of compressive force damage or any notable transverse cracks that could indicate a loss of deck compression and a potential sag in the superstructure. The deck, including any wearing surface should be inspected for signs of distress using appropriate procedures, such as chain drag, infrared thermography, ground-penetrating radar, etc. A deck survey should be completed periodically to document elevations against original as-built plans and past inspection surveys. The inspection should include an inspection of the deck drainage system.

Cable Inspection: A typical cable-stayed bridge cable is comprised of a series of multi-wire, high strength steel strands inside a steel or plastic pipe encasement. The encasement pipe will usually have a secondary protection system such as a fabric wrap and/or paint. The cable protection system should be visually inspected for any signs of distress or areas of possible water intrusion. Areas near cable anchorages in the towers, areas where the cable typically passes through the deck structure, and areas near the connection to the superstructure should be inspected thoroughly. Any cable damping system should be inspected to insure that it continues to provide proper damping of wind-induced cable vibrations. A schedule shall be developed and followed for an In-Depth Inspection involving the use of Non-Destructive Evaluation (NDE) techniques and/or intrusive inspection of the cables.

Cable Anchorages: If possible, the cable anchorages at the superstructure connections and at the towers should be inspected for signs of moisture intrusion. Signs of trapped water and any leaching should be noted. Anchorage protective end caps can usually be removed for a close inspection of the strand ends and wedge condition.

Tower Inspection: Cable-stayed bridge towers are usually massive, hollow, concrete structures. The inspection should include a visual assessment of the outside of the towers, noting any cracks, rust staining, leaching, or significant deterioration. The access door should be inspected for proper security locks. The Confined Space

Entry Plan shall be followed before entering the inside of the tower. A system of ladders, stairs, or elevators is available for access to the top of the towers, including access to cable anchorages near the top of the tower. Proper operation of tower aviation lighting and condition of their supports should be noted also.

Miscellaneous: The inspection plan should include a complete inspection of the structure's expansion joints, noting the opening and air temperature and any out-of-tolerance movements. Proper operation of navigation lighting and condition of their supports should also be noted.

3.3.10.4 General Inspection Requirements for Movable Bridges

A movable bridge presents another variable into a Complex Bridge Inspection. As a lift span is raised and lowered or a bascule leaf span is raised and lowered, dynamic loadings are induced into structural members of the bridge. Inspectors should observe operation of the bridge in order to identify any potential unintended vibrations or movement of the structure. The bridge operators and bridge mechanics should be interviewed to discuss any operational issues identified.

Typically, in addition to structural aspects of the bridges, movable bridges owners usually employ bridge mechanics and electricians to oversee the routine inspection, maintenance, and repair to the mechanical and electrical elements of the bridge. These employees are usually responsible for the inspection and maintenance of the power supply, wiring, motors, control panels, trunions, rack castings, gears, and counterweights. Although the NBIS inspection is the prime responsibility of the Team Leader, he/she should discuss operation of the bridge with the mechanic and electrician. Mechanical / electrical issues can lead to improper operation of the bridge and induce unusual forces into members, potentially causing severe buckling or torsion.

Deck Inspection: Most movable bridges have an open steel grid deck system in order to reduce the overall dead load weight of the span. The steel grid should be inspected for potential member breakage, weld failures, and deterioration of connection details to the steel superstructure. The open grid design allows deicing salts and water to fall directly on the steel superstructure members below the deck.

Superstructure Inspection: The superstructure inspection should follow the Fracture Critical Member Inspection Plan for the bridge.

Mechanical: The inspection of the mechanical systems of the bridge should include any operational reports from the bridge operators, mechanics and electricians. In addition, the inspector should observe the operation of the span, noting any unusual sounds or vibrations. The lift system should periodically be scheduled for a span balancing procedure to insure efficient and safe operation of the structure.

3.3.11 Element Level Inspections

The primary purpose of an Element Level Inspection is to provide a foundation for a statewide Bridge Management System. These inspections quantify the physical condition of individually identified elements of a structure, such as decks, beams, expansion joints, beam ends, bearings, piers, abutments, etc. The "condition states" assigned to the elements also indicate the level of action, if any, necessary to bring the element up to a "like new" condition. The Team Leader for all Element Level Inspections must have successfully completed the IDOT Element Level Bridge Inspection course.

Element Level Inspections are performed on all IDOT maintained structures, on and off the National Highway System (NHS). Element Level Inspections are performed on all Local Agency structures on the National Highway System. Element Level Inspection data is included in the annual NBIS data submittal to FHWA. Element Level Inspections are typically conducted in conjunction with and at the same interval as the Routine Inspection. Local Agencies are encouraged to extend this requirement to their entire inventories.

3.3.12 Critical Findings

A Critical Finding is defined as a structural or safety related deficiency that may pose an imminent threat to the safety of the traveling public.

3.3.12.1 Identifying a Potential Critical Finding

Potential Critical Findings can arise that are not directly related to NBIS inspections. Examples include bridges that sustain damage from vehicle impacts, fire, severe flooding or other natural disaster or unforeseen events which may result in a threat to the safety of the traveling public. These conditions may require the reporting of a Potential Critical Finding.

Potential Critical Findings can also be identified during any NBIS inspection or field investigation.

Any of the following will be considered a Potential Critical Finding:

- Lowering the condition rating for Deck, Superstructure, Substructure or Culvert (ISIS Items 58, 59, 60 and 62 respectively) to a “2” (critical condition) or less; or
- Lowering the condition rating for Channel & Channel Protection Condition (ISIS Item 61) to a “2” (Critical condition) or less; or
- Lowering the code for Scour Critical Evaluation (ISIS Item 113) to a “2” or less. See Section 3.7 for assessing Scour Critical Evaluation; or
- Lowering the Fracture Critical condition rating (ISIS Item 93A1) to a “2” (Critical condition) or less; or
- Any other situation that the inspector considers to be a threat to the safety of the traveling public.

When a Potential Critical Finding is identified, the safety of the traveling public must be the initial focus. The Team Leader must take all necessary steps to ensure the structure is secured. If the Team Leader determines that the identified defect may seriously reduce a structure's load carrying capacity, the Team Leader should isolate the defect from traffic by closing lanes. If the defect is extensive enough that lane closures may be inadequate, the structure should immediately be closed to traffic. The decision to limit traffic or close a structure must be based on an inspector's experience and the conditions present. A conservative decision to limit traffic or close the structure must be made until further analysis can be performed.

3.3.12.2 Critical Finding Determination

On each occasion that a Potential Critical Finding is identified, information regarding the conditions that contributed to a Potential Critical Finding must be immediately provided by the Team Leader to the responsible District/Area or Agency Program Manager. The responsible Program Manager shall then immediately contact the Bureau of Bridges and Structures as follows:

State Maintained Structures: For all state-maintained structures, the Program Manager shall immediately contact the State Program Manager by phone, fax, email, or other means.

Local Agency Maintained Structures: For all locally-maintained structures, the Program Manager shall immediately contact the Local Program Manager by phone, fax, email, or other means.

The Program Manager shall provide sufficient, detailed information to allow the Bureau of Bridges and Structures to make an initial determination of the severity of the finding and whether or not it will require submission of a Critical Finding Report form (BBS-CF-1) within 7 days. The Bureau of Bridges and Structures will then work with the Program Manager to determine if there is a need for a Damage Inspection, Load Rating Inspection, follow-up structural analysis, any necessary monitoring or Special Inspection, and to develop an initial plan of action to mitigate the deficiency.

If the Bureau of Bridges and Structures determines that submission of a Critical Finding Report is not required, the responsible Program Manager shall follow the initial plan of action, unless conditions change or additional deficiencies are subsequently found.

3.3.12.3 Submitting a Critical Finding Report

If the Bureau of Bridges and Structures determines that the deficiency will require FHWA notification, the Program Manager will be required to submit a Critical Finding Report form (BBS-CF-1) within 7 days. The Program Manager shall provide all required information on the form, in sufficient detail, and submit it to the Bureau of Bridges and

Structures, retaining a copy for the Bridge File. This shall include basic structure inventory and location information, a description of the deficiency, the immediate steps that were taken to ensure public safety, and a summary of the initial plan of action to mitigate the finding.

In some instances, the reported deficiency may require an immediate Damage Inspection by the Bureau of Bridges and Structures. For other situations, the plan of action may require a planned Load Rating Inspection. For bridges under the jurisdiction of Local Agencies, the Agency Program Manager may request that the Bureau of Bridges and Structures conduct a Damage Inspection or Load Rating Inspection and evaluate the effect of the Critical Findings on load carrying capacity. If the Damage Inspection, Load Rating Inspection, or load rating of a bridge under the jurisdiction of Local Agencies will require resources beyond those readily available to the Local Bridge Unit of the Bureau of Bridges and Structures, the Local Agency will be requested to provide the services of an Illinois Licensed Structural Engineer and all other items associated with the performance of the required inspection and subsequent load rating.

3.3.12.4 Failure to Report a Critical Finding

If any structure is identified as having a Potential Critical Finding (when Condition Ratings meet the criteria for a Potential Critical Finding – See Section 3.3.12.1), and the Potential Critical Finding was not reported, the Bureau of Bridges and Structures will initiate an investigation to determine the circumstances. Failure to properly report a Potential Critical Finding may result in a review of the qualifications of the responsible Program Manager and a comprehensive and in-depth review of the agencies bridge inspection program.

3.3.12.5 Reporting Critical Findings to FHWA

The Bureau of Bridges and Structures will report each Critical Finding to the Illinois Division Office of the FHWA within 24 hours of receiving the Critical Finding Report. A complete file, containing all pertinent data, will be retained by the Bureau of Bridges and Structures for each Critical Finding.

3.3.13 Inspection of Closed Structures

NBIS requirements do not extend to structures closed to traffic. However, IDOT policy is to continue to inspect all closed structures.

The following Bridge Status (ISIS Item 41) codes in ISIS represent closed structures in the inventory:

Bridge Status	Description
A	Closed, replacement/repairs under contract
B	Closed, replacement/repair anticipated within next 5 years
C	Road Closed, closure not related to condition of the structure
E	Closed, permanent closure due to bridge condition, repair/replacement not anticipated within the next 5 years

For bridges over public/private roadways, navigable waterways, active railroads, and pedestrian/bicycle paths, the inspector must assure safety of the public that may travel below the structure. Any potential or suspected hazards from falling debris should be noted and reported immediately to the District/Area or Agency Program Manager.

For all other bridges closed to traffic, the inspection should be limited to verification of proper signage and closure measures. For structures that may still be used by trespassers, additional fencing may be warranted to prevent access to the bridge. A closed bridge in the inventory may pose undue liability to the Department or Local Agency. The bridge should be scheduled for demolition if it continues to be a source of concern for collapse or a hazard to the public.

3.4 Inspection Intervals

3.4.1 Routine Inspection Interval

The Routine Inspection Interval will vary over the life of the structure. When a structure is new or has had reconstruction, major rehabilitation, or major repairs, it is preferred an Initial Inspection be performed before the structure is opened or reopening to traffic. The Initial Inspection shall be recorded in ISIS no more than 90 days after opening to traffic for IDOT structures and no more than 180 days for structures under jurisdiction of other agencies. After the Initial Inspection, the Routine Inspection Interval to the second inspection will be 24 months; one Routine Inspection must have been performed within the normal 24-month cycle, but no sooner than 12 months. After the second Routine Inspection, the inspection interval will typically be 24 months as established by the NBIS. After the second Routine Inspection, the structure may qualify for a 48 month inspection interval (See Section 3.4.1.1).

The NBIS recognizes that certain bridges in poor condition should be inspected at lesser intervals, while some bridges in good condition may be inspected at an interval greater than 24 months, up to 48 months. IDOT has established criteria, approved by the Federal Highway Administration (FHWA), for determining a maximum allowable interval for Routine Inspections. Based on the established criteria, an interval is automatically determined (computer generated) in ISIS for Routine Inspection Interval (ISIS Item 91).

The 24-month or 48-month inspection interval represents an allowable maximum, and in no way precludes inspections at lesser intervals. Structures, at the discretion of the District Program Manager or the Agency Program Manager, may be inspected at lesser intervals.

When it is desired to inspect a structure at an interval less than the maximum interval allowed by IDOT policy, the computer generated Routine Inspection Interval (ISIS Item 91) may be overridden manually to enter a shorter interval.

3.4.1.1 Routine Inspection 48-Month Interval Criteria

Bridges with Main Span or Approach Span "Structure Material" and "Structure Type" (ISIS Item 43A and 43B, 44AN/AF and 44BN/BF) indicated in the following Table 3.4.1.1 are not eligible for the 48 month inspection interval extension and must be inspected at a maximum 24 month inspection interval.

48-Month NBIS Inspection Interval Structure Material & Type Exclusions		
ISIS Item 43/44	**Structure Material**	**Structure Type**
x03	All	Deck Girder
x08	All	Orthotropic Deck
x09	All	Deck Truss
x10	All	Thru & Pony Truss
x12	All	Thru Arch
x13	All	Suspension
x14	All	Cable Stayed
x15-x17	All	Movable
x24	All	Thru Girder
x28	All	Segmental Box Girder
x30-x70	All	Specific Truss Types
x00	All	Other
8xx	Masonry	All
9xx	Aluminum, Wrought Iron, Cast Iron	All
0xx	Other or Varied	All
311	Steel	Deck Arch
319	Steel	Culvert

TABLE 3.4.1.1

Note:

ISIS Items 43 and 44 are three (3) position alphanumeric fields with the first position (43A or 44AN/AF) representing the type of material used and the last two (2) positions (43B or 44BN/BF) representing the type of structure constructed.

An "x" in the above table indicates that any alphanumeric character specified for the coding of ISIS Items 43A, 43B, 44AN/AF, or 44BN/BF may be substituted for "x".

For structures that are not included in Table 3.4.1.1, all of the following conditions must be met for the structure inspection interval to be assigned as 48-months:

- All Deck, Superstructure, Substructure or Culvert (ISIS Items 58, 59, 60 and 62 respectively) condition ratings must be “7” (good condition) or greater.
- The structure must be capable of carrying Illinois legal loads at the inventory (design) stress level. (Rating Factor ≥ 0.9 for bridges or $\geq$ 0.75 for concrete culverts under 2 or more feet of fill.) A structure cannot have a weight limit or “Legal Load Only” restriction (Bridge Posting Level, (ISIS Item 70) must be coded "5").
- Vertical Clearance (ISIS Items 53A & 53B) and Vertical Underclearance (ISIS Items 54B1 & 54B2) must be 14’-0” or greater (if applicable).
- The Length of Longest Span (ISIS Item 48) must not be greater than 100 feet.
- For new bridges or after reconstruction, major rehabilitation, or major repairs to bridges, after the Initial Inspection, one Routine Inspection must have been performed within the normal 24-month cycle, but no sooner than 12 months.
- Estimated AADT Count (ISIS Item 29) must be 30,000 or less and Average Daily Truck Traffic [(AADT) (ISIS Item 29) x (Estimated Truck Percentage)(ISIS Item 109)] must be 3,000 or less. Culverts with 2 or more feet of fill (See Culvert Fill Depth (ISIS Item 62E)) do not have to meet the AADT and Truck count criteria for a 48-month inspection interval.
- The age of the structure must not exceed 50 years (with reference to Construction Year, ISIS Item 27A, where Construction Type Indicator (ISIS Item 27) = "O") unless the structure has been reconstructed within the past 30 years (with reference to Construction Year, ISIS Item 27A, where Construction Type Indicator (ISIS Item 27) = "R").
- All structural members are load path redundant; i.e. no truss or two girder type structures, tied arches, cable stayed, suspension, etc. (See “48-Month NBIS Inspection Interval, Structure Material/Type Exclusion” Table 3.4.1.1).
- The rating for Scour Critical Evaluation (ISIS Item 113) must be “5”, “8”, or “9” or “Blank” (for bridges not over waterways).

- The structure shall not carry an Interstate route or Interstate ramp or carry any highway over an Interstate. The Functional Class (On/Under) (ISIS Item 26) cannot be coded 10.
- The structure must not be on the Strategic Highway Network (STRAHNET) system as designated by Special Systems (ISIS Item 100) coded "4".
- The structure must not be under the primary maintenance responsibility of a Federal agency (denoted by Maintenance Responsibility (ISIS Item 21) with codes of "5", "F", "G", or "H").

Bridges with repair histories that indicate a substantial probability of future problems should not be included among the candidates for the 48-month NBIS inspection interval. Such a determination may be made at the discretion of the District Program Manager, the Agency Program Manager, or the Program Managers within the Bureau of Bridges and Structures for any structures that otherwise fall under the eligibility guidelines.

The eligibility of each structure is automatically reviewed by ISIS following any revision of applicable inventory and inspection data. Any formerly eligible structures which no longer meet the inspection interval extension criteria are changed back to a maximum 24-month interval. ISIS will automatically change a 48-month interval to 24-months if the un-reconstructed age of a structure will reach 50 years before its next scheduled inspection or the reconstructed age of a structure will reach 30 years before its next scheduled inspection. Other changes to Inventory items or traffic counts may trigger an immediate change of a 48-month interval to a maximum 24-month interval, causing a structure to become "instantly delinquent". When this occurs, the bridge should be inspected within 30 days and documented appropriately in the Inspection Remarks field.

3.4.1.2 Routine Inspection 12-Month Interval Criteria

IDOT maintained bridges with one or more of the following characteristics shall receive a Routine Inspection at 12-month maximum intervals.

- Condition rating for Superstructure (ISIS Item 59), Substructure (ISIS Item 60) or Culvert (ISIS Item 62) is "4" (poor condition) or less; or
- Appraisal rating for Structural Evaluation (ISIS Item 67) is "3" or less; or

- Posted weight limit has been established due to deteriorated condition of the structure where Bridge Posting Level (ISIS Item 70) is less than "5" and not equal to "L" (Legal Load Only structures do not require a 12-month interval); or
- Uncommon or unusual designs for which there is little performance history within Illinois, such as Segmental Box Girders, Cable Stayed Superstructures, and Tied Arches. After the Initial Inspection of these bridge types, they shall receive two 12-month inspections before being considered for a normal 24-month inspection cycle. After the first two 12-month inspections are completed, and assuming there is no identified deficiencies or areas of concern, the Program Manager may request, in writing, that the inspection interval be changed to 24-months. (See Appendix A3-2 for the form) This documentation (BBS-CBW1) must be signed by the Bureau Chief of Bridges and Structures and kept in the official Bridge File.

The 12-month inspection interval criteria are applicable only to structures under the jurisdictional responsibility of IDOT. Other structures are typically evaluated on an individual basis by the Agency Program Manager to determine if a 12-month inspection interval is appropriate based on specific site conditions. However, IDOT may require a 12-month inspection interval for bridges under the jurisdiction of other agencies based on inspections conducted by the Bureau of Bridges and Structures to determine the safe load-carrying capacity of structures in accordance with Section 15-317 of the Illinois Vehicle Code.

3.4.1.3 Routine Inspection Interval for Bridges over Waterways

All structures over waterways that do not meet the Basic Submergence Criteria (See Section 3.3.4.1), shall have the condition of substructure elements below the waterline and the surrounding streambed assessed at each Routine Inspection. Evaluation of site conditions is required to establish the appropriate Routine Inspection Interval and if Special Inspections will be required to monitor specific areas of concern.

When site conditions indicate a need to monitor elements below the waterline at an interval that is less than the normal Routine Inspection Interval, the responsible Program

Manager must determine whether lowering the Routine Inspection Interval or initiating Special Inspections will be most efficient. If Special Inspections are preferred, the following information must be entered into ISIS for each Special Inspection Type:

- Special Inspection Interval (ISIS Item 92C)
- Special Inspection Inventory Type (ISIS Item 92C1)
- Special Inspection - Start Date (ISIS Item 92C2)
- Special Inspection - Initiated By (ISIS Item 92C4)
- Special Inspection - Determination Date (ISIS Item 92C6)
- Special Inspection - Inspect By Date (ISIS Item 92C7)

In most cases, the Routine Inspection Interval (ISIS Item 91) will be set by policy at 24 months or as modified by Sections 3.4.1.1 (48 month) or Section 3.4.1.2 (12 month).

When site conditions indicate the need to monitor a portion of the substructure units at an interval less than the Routine Inspection Interval, a Special Inspection should be initiated and an appropriate Special Inspection Interval set for each Special Inspection Type identified. The Routine Inspection Interval can remain unchanged. Special Inspections may be staggered to efficiently monitor the structure by setting the Special Inspection Interval (ISIS Item 92C) and Special Inspection - Inspect By Date (ISIS Item 92C7) to fall between Routine Inspections.

When site conditions indicate the need to monitor a majority of the substructure units or the entire streambed at an interval less than the Routine Inspection Interval, the Routine Inspection Interval may be lowered or the responsible Program Manager may initiate Special Inspections for each Special Inspection Type identified. See Section 3.4.3 for more guidance on monitoring requirements and recommended intervals.

3.4.2 Underwater Inspection Interval

All structures that have been identified as requiring Underwater Inspections during their service life shall receive an Initial Underwater Inspection to establish a baseline for comparison of streambed cross sections with future inspection data. The results of this Initial Underwater Inspection shall be recorded in ISIS no more than 90 days after

opening to traffic on IDOT structures and no more than 180 days for structures under the jurisdiction of other agencies.

After the Initial Inspection has been performed, in most cases, the Underwater Inspection Interval (ISIS Item 91) will be set by policy at 60 months. Further evaluation of the site conditions is required to establish the appropriate Underwater Inspection Interval and if Special Inspections will be required to monitor specific areas of concern.

When site conditions indicate a need to monitor elements below the waterline at an interval that is less than the normal Underwater Inspection Interval, the responsible Program Manager must determine whether lowering the Underwater Inspection Interval or initiating Special Inspections will be most efficient.

When site conditions indicate the need to monitor a portion of the substructure units at an interval less than the Underwater Inspection Interval, a Special Inspection should be initiated and an appropriate Special Inspection Interval set for each Special Inspection Type identified. The Underwater Inspection Interval can remain unchanged. Special Inspections may be staggered to efficiently monitor the structure by setting the Special Inspection Interval (ISIS Item 92C) and Special Inspection - Inspect By Date (ISIS Item 92C7) to fall between Underwater Inspections.

When site conditions indicate the need to monitor a majority of the substructure units or the entire streambed at an interval less than the Underwater Inspection Interval, the Underwater Inspection Interval may be lowered or the responsible Program Manager may initiate Special Inspections for each Special Inspection Type identified. See Section 3.4.3 for more guidance on monitoring requirements and recommended intervals.

If Special Inspections are preferred for any condition, the following information must be entered into ISIS for each Special Inspection Type:

- Special Inspection Interval (ISIS Item 92C)
- Special Inspection Inventory Type (ISIS Item 92C1)
- Special Inspection - Start Date (ISIS Item 92C2)
- Special Inspection - Initiated By (ISIS Item 92C4)
- Special Inspection - Determination Date (ISIS Item 92C6)

- Special Inspection - Inspect By Date (ISIS Item 92C7)

3.4.3 Substructure and Channel Monitoring Requirements and Options

When site conditions warrant special monitoring, refer to Figure 3.4.3-1 “Determining Methods for Assessment of Substructure Condition Below the Waterline” and Table 3.4.3 “Substructure and Channel Monitoring Options During Routine and Underwater Inspections” to determine the appropriate inspection type and interval.

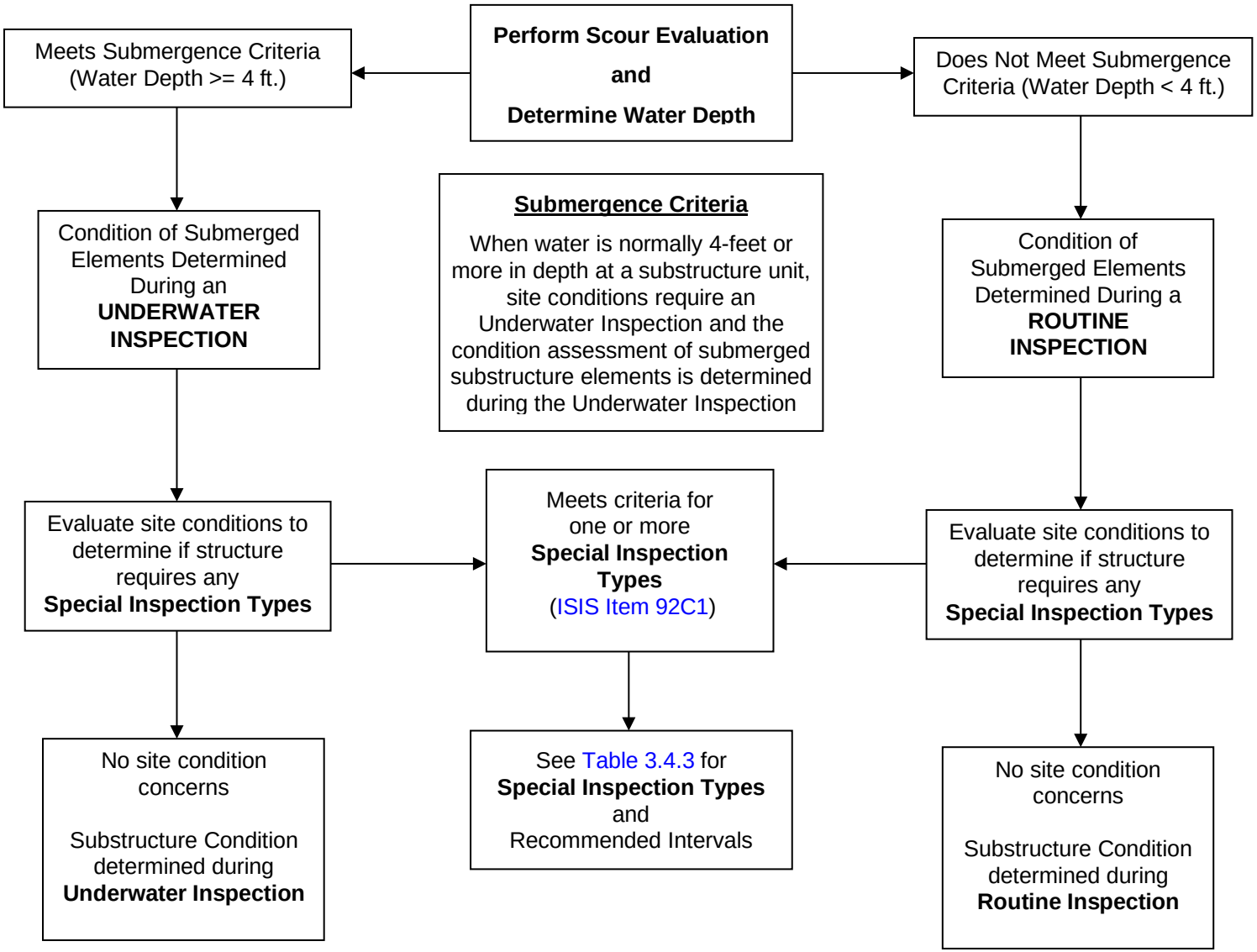

Figure 3.4.3-1 Determining Methods for Assessment of Substructure Condition below the Waterline

Description	Underwater Inspection			Routine Inspection		
	Underwater Inspection Interval	Special Inspection Type and Recommended Interval *		Routine Inspection Interval	Special Inspection Type and Recommended Interval *	
a) Known debris problems b) Erodible soils c) Channel and Channel Protection (ISIS Item 61) appraisal rating of "4" or less	60 months with Special Inspection or 12 months (max)	"G"	12 month interval	24/48 months with Special Inspection or 12 months (max)	"G"	12 month interval
Substructure supported by Spread Footing foundation not adequately keyed into rock or protected from streambed scour or degradation. A Scour Plan of Action (POA) is required	60 months with Special Inspection or 24 months (redundant) 12 months (non-redundant)	"I"	24 month interval (redundant)	24/48 months with Special Inspection or 24 months (redundant) 12 months (non-redundant)	"I"	24 month interval (redundant)
			12 month Interval (non-redundant)			12 month Interval (non-redundant)
Scour Critical or Scour Susceptible structure as determined by a Scour Critical Evaluation. A Scour Plan of Action (POA) is required	60 months with Special Inspection or As determined by the POA	"K"	See Scour POA	24/48 months with Special Inspection or As determined by the POA	"K"	See Scour POA
Observed scour at one or more substructure units that has not been mitigated. A Scour Plan of Action (POA) is required	60 months with Special Inspection or As determined by the POA	"L"	See Scour POA	24/48 months with Special Inspection or As determined by the POA	"L"	See Scour POA
		"M"			"M"	
		"N"			"N"	
* Program Manager shall determine the required inspection interval(s) appropriate for site conditions						

Table 3.4.3 Substructure and Channel Monitoring Options During Routine and Underwater Inspections

3.4.4 Fracture Critical Member Inspection Interval

The Fracture Critical Inspection Interval (ISIS Item 92A) assigned to a structure with fracture critical members should be commensurate with the structural details and condition of the structure and cannot exceed 24-months. Maximum intervals for Fracture Critical Member Inspection are summarized as follows:

- 3-months, and again within 24-months from the date of opening to traffic for all newly constructed or rehabilitated bridges with fracture critical members.
- 12-months for all bridges with a Fracture Critical Appraisal Rating (ISIS Item 93A1) coded “4” or less.
- 12-months or less (as specified by the Bureau of Bridges and Structures) for bridges with a history of fatigue crack formation or with structural details susceptible to fracture.
- 24-months for bridges other than those included in the previously described categories for Fracture Critical Member Inspection intervals.

3.4.5 Element Level Inspection Interval

Element Level Inspection data is included in the NBIS data submittal to FHWA for all bridges on the National Highway System (NHS). See “National Highway System” (ISIS Item 104) for coding structures on the NHS. All State structures will receive an Element Level Inspection, typically in conjunction with and at the same interval as the Routine Inspection. Structures under the jurisdiction of the Illinois State Toll Highway Authority (ISTHA), Local Agencies, or other State Agencies, which are on the NHS, require Element Level Inspections at the same interval as the Routine Inspection interval.

3.5 Non-Destructive Testing

3.5.1 General

Non-Destructive Testing (NDT) is often used during the inspection of steel structures to determine the presence or extent of a defect when visual inspection either suggests the existence of a crack, or is not sufficient to verify the internal integrity of structural elements such as pins. The NDT methods most frequently used in the field by IDOT are:

- D-Meter Thickness Measurement (DM)
- Dye Penetrant Testing (PT)
- Magnetic Particle Testing (MT)
- Ultrasonic Testing (UT)

Personnel inspecting steel structures should be familiar with the use and limitations of the various methods of NDT. The information in this chapter provides only basic guidance in the NDT methods employed by IDOT. To ensure proper application of the testing procedures and interpretation of results, inspection personnel require additional training by certified instructors and extensive hands-on experience.

3.5.2 D-Meter Thickness Measurement (DM)

A D-meter is a hand-held, UT based instrument that is used to measure steel plate thicknesses at discrete locations. Several different models of D-meters are available. Consult the manual for the specific D-meter being used for proper operation. General guidance is presented below:

- Calibrate the D-meter per the manual for the particular model being used. Measure a plate of a known thickness with the D-meter to verify that it is working properly after calibration.
- Refer to the manual for the particular model being used for the maximum plate thickness the D-meter can measure.
- D-meters can only measure the thickness of the ply the transducer is in contact with.

- When measuring remaining section, check the other side of the plate, if accessible, to see if a flat and uniform area is available at the location where the thickness is to be measured.
- Remove loose paint, corrosion and dirt/debris at the location where the thickness is to be measured using a wire brush or a “flapper” type sanding disc. Expose a small area of bare steel that is slightly larger than the transducer being used.
- Use couplant between the transducer and the bare steel when taking thickness measurements.
- In addition to recording thickness remaining, be sure to record the nominal thickness at nearby areas of the same plate that do not have section loss for comparison purposes.
- When measurements are complete, clean the bare steel areas of couplant and dirt/debris. Touch up these small areas with a spray “paint + primer” product to protect the area from further deterioration.

3.5.3 Dye Penetrant Testing (PT)

After a visual inspection, PT is often used to verify the existence and extent of cracks open to the surface in welded connections or the base material of steel beams/girders, depending on capillary action to reveal the existence of cracks. The following general procedures are used:

Prepare Surface: Prior to PT, all dirt, grease, oil and moisture, together with loose, heavy or flaking paint, rust and scale must be removed from the area to be tested, exposing bare metal at the suspected defect. Thin, tightly adhered paint or scale and light rust may remain as long as it does not prevent dye from entering a defect. The use of mechanical grinding tools or blasting equipment to prepare the test surface can deform or “smear” base metal, obscuring the crack and severely affecting the accuracy of the test. For this reason, foreign materials (dirt, grease, oil, loose paint, moisture) should be removed using solvents, strippers and nonmetallic scraping tools, followed by compressed air or volatile cleaners, ensuring any potential cracks are “empty” – free of material that would prevent capillary action for

absorption of penetrant. Removing rust and scale requires mechanical methods, so scrapers and hand-wire brushing are used to avoid deforming or “smearing” base metal and covering cracks.

Application of Penetrant: After the surface to be tested has been cleaned and thoroughly dried (solvent has evaporated from any defects), a dye penetrant is applied to the surface in the area where a crack may exist. The penetrant is applied by spraying or brushing, depending on the type of dye, available access, and the orientation of the surface. The penetrant must remain on the surface for a specified “dwell time” prior to further actions. The dwell time is based on manufacturer recommendations, and depends on the temperature of the material, relative humidity, geometry of suspected defects (surface opening and internal volume) and the type of material tested (weld, plate, rolled shape, bent plate, sheared edge, etc.).

Excess Penetrant Removal: After sufficient dwell time to allow capillary action to pull the dye into open defects, the remaining penetrant must be removed from the surface. While nearly complete removal of the penetrant on the surface is necessary to prevent false indications, care must be taken not to flush dye out of a crack or other discontinuities within the tested area. This is accomplished by spraying the cleaning agent on a towel and wiping, but not spraying the cleaner directly on the surface. Some traces of dye may remain on the surface, especially on welds or cut edges with irregular faces, but that should not be mistaken for a subsurface defect.

Application of Developer: After excess penetrant has been removed and the surface has dried, a developer is applied to the surface to extract the dye from any discontinuities. The developer is a “blotting agent” with a higher attraction for the dye than the capillarity holding it in the defect(s). The developer usually dries white, so the red or blue dye absorbed provides a strong color contrast, and the extent and intensity of the stain gives some indication of the volume of the defect. Scratches and nicks holding small amounts of dye show as small, non-relevant indications, but significant cracks and porosity will produce large vivid stains. The time necessary for the developer to extract most of the penetrant varies, depending on the type of

developer, the geometry of the defect and material temperature. In general, the developing time will be approximately one half of the required dwell time.

Interpretation of Test Results: After the developer has been on the surface a sufficient period of time, a visual inspection is made to interpret any indications within the tested area. Only discontinuities that are open to the surface within the test area will be visible. Proper interpretation requires that the inspector be familiar with the original fabrication of the tested area (assembly, bending, welding procedures) and the types of defects likely to be present (base metal fractures, delaminations, scabs, weld toe or centerline cracks, porosity, roll-over, lack of fusion). Photographs of the defect/test area should be taken for documentation of the test results.

A Dye Penetrate Testing kit typically contains:

- Visible dye penetrant that will be pulled into defects and held by capillary action.
- Cleaning fluid for use in pre-cleaning the test area and removing excess penetrant from the surface being tested.
- Non-aqueous developer that will both extract the dye which penetrated into a discontinuity and also provide a contrasting background color for the dye.
- Wiping towels, brushes and directions for using the kit.

In addition to steel, PT can be used on such materials as aluminum, cast iron, forgings, castings, plastics and ceramics. Although the removal of paint from existing structures can be problematic, PT is a very effective tool for detecting surface cracks, and can be easily carried and used without a power supply or complex equipment.

3.5.4 Magnetic Particle Testing (MT)

MT, also often called “mag” particle testing, can be used to locate both surface and near surface discontinuities in ferrous steel elements using magnetization techniques and principles. It cannot be used on aluminum or non-ferritic (non-carbon stainless) steels. Two types of MT equipment may be used, the prod or the yoke. The prod, which is often used in steel fabrication shops, has two rounded aluminum contact points that pass an

AC or DC electrical current through the test piece, inducing a magnetic field around the current path. (Copper contact points must never be used, since arcing could deposit copper residue.) Bare steel is required at the contact points, and care must be taken to only energize the prod while in firm contact with the test surface or arcing may occur, causing "arc strikes", which are considered serious defects. The yoke, which is most often used for field inspections, is an electromagnet. This is used so that no electrical current passes into the piece and arcing is avoided. One advantage of MT using a yoke is that it can be performed without removing well adhered paint from the tested surface. However, paint on the surface of the test area can mask very small discontinuities by inhibiting movement of the iron particles, and the thickness of coatings present on the test surface should be 2 mils or less. Yoke legs should be oriented nearly perpendicular to the surface for transfer of the magnetic field, so positioning near inside corners may be difficult. The following general procedures are used by IDOT personnel for performing MT using a yoke:

Prepare Surface: Although cracks filled with contaminates can be detected using MT, efforts should be made to ensure that the tested surface is clean, dry, and free of such contaminates as oil and grease that impede particles from moving toward defects. Heavy, thick, or loose rust and scale, thick or peeling paint and paint runs, and heavy weld spatter prevent good yoke contact and impede particle mobility. Test surfaces can be cleaned using solvent or detergent cleaners, wire brushing, grinding or blasting with sand or grit. If necessary, solvent paint removers can be used to remove excessive paint from the test surface.

Creation of Magnetic Field: A "yoke", which is essentially a C-shaped electromagnet, is used to create a magnetic field in the test area. Although referred to as "C-shaped", most yokes have articulated "legs" and their shape can be varied to make the ends ("feet") perpendicular to the surface, providing good contact to transfer magnetic flux into the test surface. The yoke is connected to an electrical power source and legs of the yoke are placed in contact with the test surface on either side of the test location. Once the yoke is placed in contact with the test surface and current activated, the magnetic field is established. To verify the yoke is working

properly, the lifting requirements of Section 6.7.6.2 in the AASHTO/AWS D1.5 Bridge Welding Code must be met. (See Appendix A3-7)

Application & Removal of Particles: While the magnetic field is established, a powder of dry, finely divided ferromagnetic material with high magnetic permeability and low magnetic retention, commonly referred to as "iron filings", is applied to the test area using a squeeze bulb or shaker bottle. The powder is typically orange or red in color to contrast with the test surface. With the magnetic field maintained, excess powder is removed from the test area using dry, low pressure compressed air.

Interpretation of Test Results: Once the excess powder has been removed from the test area, the iron filings that remain should have aligned themselves with any discontinuities present on or near the steel surface within the area tested. If the powder is on top of a flat area, the yoke may be de-energized, and even removed to allow the particle pattern to be picked up on cellophane tape. For vertical or overhead areas, de-energizing will release the particles.

This technique depends on the placement of the yoke relative to the defect's orientation and size. The magnetic field induced in the steel "flows" between legs of the yoke, and any interruption in the steel "leaks" magnetic flux, which attracts the iron particles. If a crack is parallel to the "flow", very little leakage occurs. Therefore, the yoke must be placed in two orientations, offset approximately 90º, for each location tested to avoid missing significant defects. This may require realigning the yoke legs. Personnel performing the test must determine if any pattern observed is a defect, a false indication, or a suspected defect requiring additional investigation using another method of NDT. Photographs of the defect/test area should be taken for documentation of the test results.

To perform MT with a yoke, the following material and equipment is required:

- A source of electricity
- An electromagnetic yoke

- Ferromagnetic “powder”
- Dry, low pressure compressed air

When an electrical source is not available, MT can be performed using Permanent Magnets. Permanent magnets are sometimes used for magnetic particle inspection as the source of magnetism. The two primary types of permanent magnets are bar magnets and horseshoe (yoke) magnets. These industrial magnets are usually very strong and may require significant strength to remove them from a piece of metal. However, permanent magnets are sometimes used by divers for inspection in underwater environments or other areas, such as explosive environments, where electromagnets cannot be used. Permanent magnets can also be made small enough to fit into tight areas where electromagnets might not fit.

3.5.5 Ultrasonic Testing (UT)

UT is used by IDOT bridge inspection personnel to ascertain the internal condition of structural elements that cannot be visually or otherwise inspected. Testing pins for the presence of internal cracks is the most common use of UT during bridge inspections. UT must be performed by personnel trained to use the equipment and interpret the test results. Equipment and materials typically used for UT pin inspections are:

- Ultrasonic Test Machine (horizontal and vertical axes can be calibrated)
- 2.25 MHz and 3.5 MHz, ½” diameter, straight beam transducers
- Calibration block (Note: Special IDOT calibration block is used for pins.)
- Couplant and clean-up material
- Scrapers and other tools to prepare surface.
- Documentation for pins (geometry, material, previous inspection results)
- Record keeping material

Basic UT procedures for inspecting pins are covered in Section 3.6: “Inspection of Pins, Links, and Hangers”.

3.6 Inspection of Pins, Links, and Hangers

3.6.1 Inspection of Pin & Link Assemblies

3.6.1.1 General

The information provided in this section for the inspection of pin and link assemblies provides an expedient method for evaluating in-place double-pin and link or single-pin moment release joints on multi-beam/girder and 2-girder bridges. Region/District inspectors are trained by IDOT employees previously certified by outside agencies in the use of ultrasonic testing (UT) equipment and evaluation methods. UT and visual inspection (VT) shall be utilized for a Preliminary Pin Inspection (PPI), based on a pass-fail criteria related to the detection of defects or discontinuities within the length of the pin. If the PPI detects significant defects/discontinuities or is inconclusive, a subsequent Supplemental Pin Inspection (SPI) using the same technique must be performed by personnel qualified to UT Level II under the standards recommended by the American Society of Nondestructive Testing (ASNT). This procedure, although based on industry practices, is an IDOT method developed to provide basic condition information, and neither intends or purports to identify all irregularities within a pin.

3.6.1.2 Inspector Qualifications

Personnel utilizing UT for the inspection of pins must be adequately trained. IDOT inspectors performing a PPI to detect significant defects/discontinuities are typically trained by IDOT personnel qualified to the standards recommended by the ASNT for UT Level II certification. At a minimum, the training provides:

- Familiarization with operating principles of UT.
- Typical calibration methods, using American Society for Testing Materials/American Society for Nondestructive Testing (ASTM/ASNT) standard UT reference blocks and an IDOT UT reference standard for preliminary pin evaluation.
- Initial VT and subsequent UT scanning methods for various situations and configurations, including assessments and reporting of results.

- IDOT pin scanning methods, result interpretation, testing documentation and recommendations for follow-up inspection or immediate action.
- Potential problems with access and interpretation, and alternative tests or methods.
- Field exercise or classroom mock-up.
- Additional discussion, questions and answers, etc.

The training includes extensive hands-on and interactive participation, encouraging participants to critically examine the methodology and propose modifications and improvements. Upon the successful conclusion of the training, inspectors will be considered qualified to conduct preliminary pin and link inspections. During a PPI, if results indicate the presence of anomalies or are inconclusive, a SPI must be scheduled for additional nondestructive testing (NDT) to be performed by IDOT or outside testing agency employees qualified to appropriate ASNT Level II or III criteria.

3.6.1.3 Link Inspections

All accessible surfaces of link plates shall be visually inspected (VT) for corrosion and paint deterioration, distortion due to misalignment or seizure, and cracking, especially at critical sections near the pins. Any confirmed or suspected cracks shall be immediately reported to the District/Area or Agency Program Manager, so that further NDT may be scheduled or shoring / lane closures may be instituted. Other defects shall be documented for future reference or for directing follow-up NDT.

UT or DM may be used during link inspections to verify remaining material thickness, but their use for crack evaluation and detection in link plates is not common and information is not provided within this manual. Magnetic particle inspection (MT) or dye penetrant testing (PT) may also be used to assess possible cracks if the inspector is equipped and trained for their use.

The inspector should attempt to determine if the pins are “frozen” within the girder webs and/or link plates or are free to rotate due to temperature changes or the passage of

vehicles across the structure. A continuous layer of paint or corrosion across the interface with no interruption caused by rotation may indicate seizure. Single pins in moment release joints may undergo sufficient motion under live load to disclose the absence of seizure. Dual pins in hanger links usually rotate gradually due to temperature changes and do not show perceptible motion under live load, so seizure is difficult to assess.

3.6.1.4 Pin Inspections

As previously discussed, a PPI utilizing UT shall be performed by qualified personnel with adequate training. If pins are judged satisfactory, based on the criteria herein, no additional testing is needed. If anomalies or non-conforming pins are found, the District/Area or Agency Program Manager shall arrange for a SPI to provide additional UT evaluation by District, Central Office or outside agency personnel qualified to at least the standards recommended for an ASNT UT Level II. Based on the results of the SPI, recommendations can be made for replacement or subsequent inspection criteria for suspect pins. If the PPI indicates the actual (or potential) failure of one or more pins, the District/Area or Agency Program Manager, and the State Program Manager shall be notified immediately and lane reductions, traffic restrictions or complete structure closure may be required until further inspections, pin replacement or supplementary supports can be implemented. An actual or suspected pin failure is considered a Critical Finding. Once steps have been taken to assure safety of the public, a Critical Finding Report (See Section 3.3.12) must be submitted to the Bureau of Bridges and Structures. See Appendix A3-2 for the form.

3.6.1.4.1 Preliminary Pin Inspections

The objective of the Preliminary Pin Inspection (PPI) is to verify the absence or detect the presence of significant defects or discontinuities within the length of a pin. To perform a PPI, the following material and equipment are required:

- Ultrasonic Test Machine (horizontal and vertical axes can be calibrated).
- 2.25 MHz and 3.5 MHz, ½" diameter straight beam transducers.
- IDOT Test Specimen (See Diagram "A" – Figure 3.6.1.4.1-1).

- Couplant and clean-up material.
- Scrapers and other tools to prepare surface.
- Documentation on existing pin geometry, material and previous inspection results.
- Record keeping material.

Preliminary Pin Inspection Method:

- Either transducer may be used. (If problems arise in evaluating the far end of long and/or small diameter pins, the 3.5 MHz transducer may be more accurate with its smaller beam spread. The greater beam spread of the 2.25 MHz transducer may be preferred for pins with cotter pin holes near the contact end, and to access areas behind threads or step-down diameter reductions at ends.)
- Calibrate the equipment just before beginning work, using the transducer and IDOT test specimen. For pins up to 10" (250 mm) long, adjust the display so horizontal screen increments represent 1" (25 mm). For longer pins, adjust screen increments to represent convenient units (for example: 1¼", 1½", 2" or 30 mm, 40 mm, 50 mm), while keeping the pin's far end back signal on the screen.
- At the first pin to be tested, verify that no unexpected reflectors (not including threads, cotter pin holes, etc.) are present between the transducer and far end. If any appear, go to another pin until a satisfactory pin is found. Then adjust the gain so the back reflection of the pin's far-end is at 50% of the screen height (use this value as the reference level on the Preliminary Pin Inspection Form 2760), and record the transducer and dB reading on the inspection form. For inspection scanning of that pin and all similar pins, increase that gain by 10 dB.
- Distance calibration should be periodically verified by checking the IDOT specimen after each two hours of work, at each new work location ("work location" usually entails all the pins at one deck joint), for significant changes in pin lengths or condition, or if the pin's temperature rises or falls more than about 30ºF (20ºC), possibly affecting couplant behavior. The IDOT specimen should be at approximately the same temperature as the tested pins.

- Scan one end of each pin, using a circular motion and positioning the transducer so that near-end threads do not degrade the image while evaluating the far end of the pin. Compare results to the pin geometry, so that diameter changes, cotter pin holes or far-end threads are not mistaken for defects. If the “shelf” or “shoulder” (change in diameter of the pin) is more than ¼ inch, scanning should be done from both ends.
- Any “other reflectors”, especially in bearing contact areas, producing an image more than 20% of screen height at reference level (50% of screen height at end of pin) require also scanning the pin from the opposite end. The results shall be recorded for future reference, indicating the location (distance from each end), gain, signal height and transducer position to maximize the signal for each reflector. The transducer’s positions when the defect initially appears and finally disappears (or is minimized) on the screen shall also be noted. “Transducer position” shall be described by its circumferential location, based on a theoretical clock face with 12 at the top of the pin, and radial distance from the center of the pin. For consistency, pins requiring additional inspections shall have the 12 o’clock position center punch-marked on both ends near the periphery, and “clockwise” shall be considered independently for each end.
- Scanning from both ends may provide sufficient data to characterize the type, size, orientation and criticality of defects. If any such reflector produces a signal more than 50% of screen height at reference level, or if a pin’s far end response is completely lost while scanning from either end, the results for both ends shall be immediately reported to the District/Area or Agency Program Manager and the State Program Manager. Large internal discontinuities may prevent most of the pulse from reaching the far end or redirect the reflected signal, resulting in loss of far end back reflection.

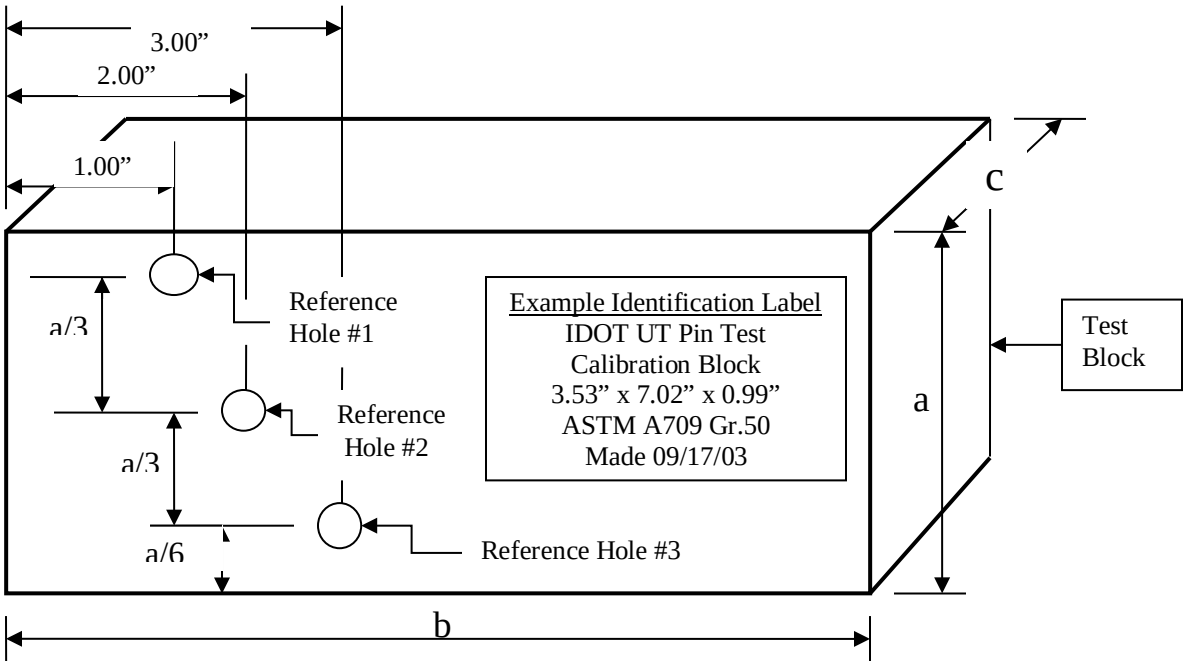

FIGURE 1: IDOT UT Pin Test Calibration Block

Based on pins inspected and material available, select a, b & c as follows:

a (height): nearest ½” from 3” to 6”
b (length): nearest whole inch from 6” to 12”
c (thickness): nearest ¼” from ¾” to 1¼”

Accurately determine all dimensions (± 0.01”) and place label on specimen.
Reference Holes (RH) #1, #2 and #3 are 0.625” diameter, through-thickness of test block, and perpendicular to face within ± 0.5 degrees.
Material for test block must be ultrasonically “clean”, and either low alloy, carbon steel or stainless steel may be used. All surfaces are milled and polished, and all corners are perpendicular (within 0. 5º).

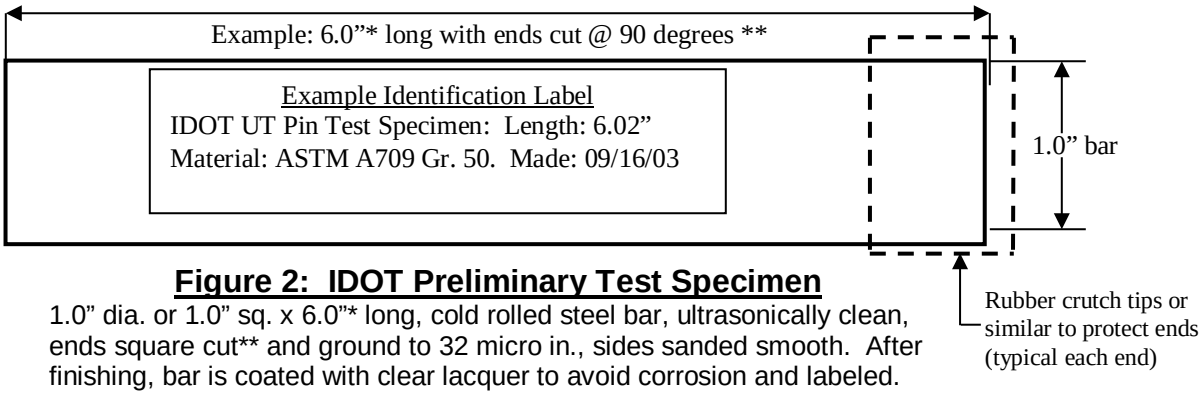

Figure 2: IDOT Preliminary Test Specimen

1.0” dia. or 1.0” sq. x 6.0”* long, cold rolled steel bar, ultrasonically clean, ends square cut** and ground to 32 micro in., sides sanded smooth. After finishing, bar is coated with clear lacquer to avoid corrosion and labeled.

Notes: *Test specimen length of 6” is arbitrary. Convenient lengths representative of typical pin lengths may be used. Even inch increments (7”, 8”, 9”, 10”) are recommended for ease of calibration.
** Ends of specimen cut square to within 0. 5 degrees, length tolerance ± 1/8”

DIAGRAM “A” – IDOT TEST BLOCK & SPECIMEN

Figure 3.6.1.4.1-1

3.6.1.4.2 Supplemental Pin Inspections

The equipment and procedures used to conduct a Supplemental Pin Inspection (SPI) are the same as used for performing the PPI. The SPI is, however, performed by personnel with greater experience and a higher level of training in the use of UT (ASNT Level II or III).

3.6.1.5 Inspection Records

Permanent inspection records shall be maintained for pins and links. Forms for documenting the condition of pins and links during PPI's and SPI's are provided by Forms BBS 2760 and BBS 2780 (See Appendix A3-2). Pins and links with no structurally significant anomalies detected by the PPI only require stating "No Defects Noted", along with the item's location, the pin end(s) scanned, and any pertinent remarks to assist future inspections. Note that "location" for pins and links includes span and girder/beam number, distance to nearest identified support, pin location (upper or lower) and link position, such as "east side". Other comments regarding field conditions (paint condition, possible seizure, excessive rust staining, etc.) or recommended maintenance actions must be reported separately to the District/Area or Agency Program Manager.

A copy of the permanent inspection records for each pin and/or link with reportable anomalies, indicating all pertinent field observations and recommendations for additional investigations, shall accompany the preliminary inspection report submitted to the District/Area or Agency Program Manager. The permanent record documents the initiation and subsequent growth of defects, and will be maintained until the item is replaced. If reported indications are proven to be non-significant or "spurious" (caused by technique or other causes, but not actual internal defects), the record should include possible explanations and verification testing results.

Pins requiring additional investigation (due to a reflector exceeding 20% of screen height during the PPI) shall have the location of all reflectors exceeding 20% of screen height at the reference level documented, as described in item 6 of the "Preliminary Pin Inspection Method" in Section 3.6.1.4.1.

Additional investigation required for links to quantify potential structural problems noted during the PPI may employ UT, MT, PT, DM or radiographic testing (RT), as directed by the District/Area or Agency Program Manager. The additional test results shall be recorded on a separate form for each link, and the form shall be attached to the link's permanent inspection record for future reference, even if the indications prove to be non-significant or "spurious" (caused by technique or other causes, but not actual internal defects). The record should include possible explanations and verification testing results. Additional information, test reports, photos or other pertinent information shall be attached to the permanent record and stored in the Bridge File.

If paint, rust and/or other foreign material is removed from links, nuts and non-stainless steel pins for VT, MT, UT or PT, bare steel should be protected after the inspection is complete. UT couplant, PT residue and moisture should be removed and then a zinc-rich primer or other owner-approved coating may be spray-applied. For pins that will continue to be inspected on a regular cycle, the exposed ends may be coated with grease.

Copies of each structure's overall evaluation, together with copies of the permanent records for each pin and/or link and additional testing recommended to evaluate anomalies, shall be signed by the Team Leader and forwarded to the District/Area or Agency Program Manager, immediately after the inspection. Reports, including summaries, photos and additional investigations of PPI-revealed deficiencies, along with inspection personnel's suggestions or comments applicable to the particular location and similar installations, shall be compiled by the Team Leader and submitted to the District/Area or Agency Program Manager.

Inspector suggestions and comments may include initial and follow-up investigation methods, preventive maintenance actions, inspection documentation, employee safety considerations, and methods to improve inspection efficiency.

3.6.2 Inspection of Cantilever Truss Suspended Span Pins & Hanger Members

3.6.2.1 General

Large, continuous, cantilever trusses typically have suspended simple span trusses in the main span, supported by large steel pins and hanger members. The pins vary in size and diameter, but can reach 30 inches long and 12 inches in diameter. Hangers are typically either built-up members or rolled sections with additional reinforcement plates at the pin locations. The pins and hangers in suspended truss spans are typically considered Fracture Critical Members. (See Section 3.3.5 and 3.3.6.3 for Fracture Critical Member Inspection requirements)

3.6.2.2 Pin Inspections

In general, although they are much larger and more complex, suspended truss pins and hangers are to be inspected by the same criteria as beam/girder pins and links. A Preliminary Pin Inspection shall be completed at each location. A detailed access and pin preparation plan may be required. Suspended truss pins may have center bore holes with steel threaded rods and end cap plates that must be removed before a PPI can be completed. Consult previous inspection records and procedures or discuss potential limitations of cap or retention plate removal before commencing an inspection.

In some instances, test pins, fabricated to the same specifications as the existing pins, may be available for calibration of UT equipment.

As with pin and link inspections, the PPI is a general investigation to verify the absence or detect the presence of significant defects or discontinuities within the length of the pin. If any anomalies or potential defects are detected, they should be immediately reported to the Program Manager and a Supplemental Pin Inspection (SPI) should be scheduled. Any potential major defect or suspected fracture is considered a Critical Finding and should be reported immediately to the District/Area or Agency Program Manager and the State Program Manager, after taking all necessary procedures to safeguard public safety. A Critical Finding Report (See Section 3.3.12) must be completed and submitted to the Bureau of Bridges and Structures as soon as possible.

3.6.2.3 Hanger Member Inspections

Suspended truss hangers are typically large vertical members consisting of steel box sections, built-up riveted or bolted plates, angles, or channels, or large rolled beam sections. The area immediately adjacent to the pins is typically reinforced with additional welded or bolted plates or other steel shapes. The entire hanger, also a Fracture Critical member, must be completely inspected visually. Any suspected cracks, distortions, or other potential defects must be recorded on the appropriate inspection form. Further investigation may require specialized NDT methods by a trained inspector.

3.6.3 Inspection of Pins and Eyebars in Eyebar Trusses

3.6.3.1 General

Eyebar trusses, although no longer used in modern bridge construction, remain in the Illinois bridge inventory and are usually located on low traffic volume rural roadways. Eyebar trusses are typically light, relatively short, simple-span trusses but can reach major bridge lengths and span major waterways.

3.6.3.2 Pin Inspections

Eyebar truss pins and eyebars are to be inspected by the same criteria as beam/girder pins and links. A PPI shall be performed on each pin and the results recorded on the appropriate inspection forms. Eyebar truss pins are considered Fracture Critical members and must be inspected during each scheduled FCM Inspection. See the recording and reporting requirements in the previous sections.

In many instances, excessive pack rust between eyebars at pin locations may have totally seized any movement of the pins. Excessive pack rust should be carefully removed, if possible, without causing any damage to the eyebars. In addition, the inspector should verify that there is sufficient pin length beyond the outside eyebars or that the end caps, retainer nuts, or cotter pins are functioning properly. Excessive pack rust can exert enough force to push eyebars off of their pins in extreme cases.

3.6.3.3 Eyebar Inspections

Eyebars are typically cast, forged, or cut from rolled steel plate material. Most eyebars are rectangular in cross-section that transition to a wider section with an opening to receive a steel pin. The "eyes" in round eyebars are generally flattened by forging. The "eye" can also be formed by creating a loop that is then forged or welded to close the loop.

As with links and hangers, the entire length of the eyebar should be visually inspected for any cracks, gouges, section loss, or distortions. Particular attention should be paid to the forged or formed "eye" areas. Any anomalies or potential defects should be reported immediately to the District/Area or Agency Program Manager. Any major flaws or suspected fractures should be immediately reported to the District/Area or Agency Program Manager and the State Program Manager after taking all necessary procedures to safeguard public safety. A Critical Finding Report (See Section 3.3.12) must be completed and submitted to the Bureau of Bridges and Structures as soon as possible.

3.7 Bridge Scour and Plans of Action

3.7.1 General

Scour is the leading cause of bridge failures. In 1988, FHWA initiated the National Scour Evaluation Program. The National Bridge Inspection Standards (NBIS) specifies that all bridges over waterways must be evaluated to assess susceptibility to scour and to determine if protection in the form of countermeasures is required to ensure the stability of the structure. NBIS further specifies that the responsible agencies for all bridges determined to be scour critical must prepare and implement a Plan of Action (POA) to monitor known and potential deficiencies in accordance with the POA and to address Critical Findings (See Section 3.3.12).

The following definitions are provided within the NBIS:

Scour: Erosion of streambed or bank material due to flowing water; often considered as being localized around piers and abutments of bridges.

Scour Critical Bridge: A bridge with a foundation element that has been determined to be unstable for the observed or evaluated scour condition.

Critical Finding: A structural or safety related deficiency that requires immediate follow-up inspection or action.

Illinois has completed this program and all waterway structures in the Inventory have been assigned a Scour Critical Evaluation Rating (ISIS Item 113). A POA has been developed for all bridges determined to be scour critical. A copy of the POA is maintained in each Bridge File. See Section 3.7.6 for monitoring scour critical and scour susceptible bridges.

3.7.2 New and Rehabilitated Bridges over Waterways

A Scour Evaluation Study, determination of estimated scour depths, and a recommended Scour Critical Evaluation Rating (ISIS Item 113) are required to be completed during the preliminary planning phase for all new bridges over waterways and all rehabilitation projects that alter existing substructure units in the waterway. For all

State bridges, the Bureau of Bridges and Structures must review and approve all Scour Evaluation Studies and must enter the Scour Critical Evaluation Rating into ISIS. For all Local bridges, the designer must provide the Scour Evaluation Study, estimated scour depths, and Scour Evaluation Rating (ISIS Item 113) when submitting the Preliminary Bridge Design and Hydraulics Report. See "Scour Estimation of Bridges" in Section 2.3.6.3.2 of the Bridge Manual for design guidance.

3.7.3 Scour Plan of Action (POA)

For every structure identified as a Scour Critical bridge, and for selected structures described as "scour susceptible" in Section 3.7.4.2, a Plan of Action (POA) must be developed to provide, at a minimum:

- instructions regarding the type and frequency of inspections required to ensure adequate monitoring of conditions at the bridge site
- identification of fixed scour monitoring devices or reference points that have been installed at the site and are to be routinely referenced by inspection personnel
- reference data for use by inspection personnel for assessing existing site conditions and evaluating the effect of current conditions on structure stability
- guidance to inspection personnel for reporting site deficiencies
- guidance to inspection personnel for initiating or recommending bridge closures. The following are examples of when the bridge / roadway shall be closed; other site specific items will be included in the POA
    - bridges experiencing pressure flow (water touching the superstructure)
    - bridge approach roadways being overtopped
- guidance provided to inspection personnel to reopen the roadway
- information relative to the type of countermeasure in-place or scheduled for placement at the site to mitigate existing or potential scour problems

The POA must be maintained with the Bridge File containing all other inspection information related to compliance with the NBIS. A copy of the POA must also be available for use during field inspections and updated if necessary based on the conditions observed during each inspection.

Stream cross-sections shall be taken along the upstream and downstream fascias after each major storm event as defined by the "alert" level in BridgeWatch (see Section 3.7.6), at a minimum, for structures with a Scour Critical Evaluation Rating (ISIS Item 113) of "7" or "4" or less, and for all structures with a Scour Critical Evaluation Rating of "5" that require an Underwater Inspection. Additional cross-sections may be required in the POA. An outline for a "Scour Critical Bridge – Plan of Action" and instructions for utilizing the outline are available in Form BBS 2680 for structures with a Scour Critical Evaluation Rating of "7" or "4" or less. This outline is applicable to POA preparation for most structures. However, Major River Bridges or other unique structures may require POA documentation beyond that contained in the outline provided.

3.7.4 Scour Evaluation and Stability Assessment of Existing Bridges

Although the theoretical Scour Evaluation process identified Scour Critical bridges in the inventory, any bridge over a waterway has the potential for severe scour. Storm events that produce record flows beyond design levels, large debris piles against one or more substructure units, pressure flow, or other factors that lead to actual scour may occur at any structure. Scour Critical Evaluation Ratings (ISIS Item 113), assigned to all structures over waterways, are defined by the allowable scour limits. However, once actual scour progresses beyond those limits, the stability of the structure may be threatened.

Any structure that incurs scour at or beyond the limits identified in Sections 3.7.4.1, 3.7.4.2, or 3.7.4.3 below, may require a new Scour Evaluation Study and a structural stability analysis. The District/Area or Agency Program Manager must contact the Bureau of Bridges and Structures immediately so that a determination can be made. If the Bureau of Bridges and Structures finds that further analysis must be made before the stability of the structure can be determined, precautionary measures may need to be implemented. The District/Area or Agency Program Manager and the State Program Manager will determine the need for precautionary measures on a case-by-case basis. See Section 3.7.5 for conducting a Scour Evaluation Study on existing bridges.

3.7.4.1 Reporting Actual Scour at Scour Critical Bridges

A scour critical bridge is one with abutments and/or pier foundations rated as unstable due to scour potential as determined from a Scour Evaluation Study. The bridge has ISIS Item 113 coded "3" or less.

If newly discovered scour damage on any bridge rated Scour Critical meets one of the criteria below, the inspector shall, as soon as possible, notify the District/Area or Agency Program Manager and the Bridge Management Unit (BMU) in the Bureau of Bridges and Structures for further direction. ISIS Item 113 should be coded "A" as soon as practical:

- Scour equaling 25% or greater of the as-built overburden above the top of footing occurs during a flood event
- Scour exposing the top of footing or greater than six (6) feet of scour has occurred at a pile bent substructure

The Bureau of Bridges and Structures tracks scour critical bridges in ISIS using the codes entered for Scour Critical Evaluation Rating (ISIS Item 113). When ISIS Item 113 is changed to "A", the Bridge Management Unit must be contacted. See "Scour Evaluation Study for Existing Bridges" (Section 3.7.5).

3.7.4.2 Reporting Actual Scour at Scour Susceptible Bridges

Scour critical bridges were earlier defined as structures with Scour Critical Evaluation Rating (ISIS Item 113) of "3" or less. Some structures with ISIS Item 113 rated greater than "3" may have scour related concerns that require monitoring, even though they are not considered scour critical bridges. Structures with ISIS Item 113 coded "4", "6", or "7" are considered to be scour susceptible bridges, and they require the establishment of a POA as well. See Section 3.7.6 for monitoring requirements.

If newly discovered scour damage on any bridge rated Scour Susceptible meets one of the criteria below, the inspector shall, as soon as possible, notify the District/Area or Agency Program Manager and the Bridge Management Unit (BMU) in the Bureau of Bridges and Structures for further direction. ISIS Item 113 should be changed to "A" as soon as practical:

- Scour equaling 50% or greater of the as built overburden above the top of footing occurs during a flood event
- Scour exposing the top of footing or greater than six (6) feet of scour has occurred at a pile bent substructure
- The scour countermeasure has been damaged during a flood event

The Bureau of Bridges and Structures tracks scour susceptible bridges in ISIS using the codes entered for Scour Critical Evaluation Rating (ISIS Item 113). When ISIS Item 113 is changed to "A", the Bridge Management Unit must be contacted. See "Scour Evaluation Study for Existing Bridges" (Section 3.7.5).

3.7.4.3 Reporting Actual Scour at Non-Scour Critical / Non-Scour Susceptible Bridges

Structures with ISIS Item 113 rated "5", "8", or "9" may incur scour during a major storm event, even though they are not considered Scour Critical or Scour Susceptible bridges. These bridges can still pose a risk as explained in Section 3.7.6 under "Scour Critical Evaluation Rating coded "8". Since these bridges were determined to not be Scour Critical or Scour Susceptible, there is no requirement for establishment of a POA.

If newly discovered scour damage on any non-scour critical or non-scour susceptible bridge meets one of the criteria identified in Section 3.7.4.2 above, the inspector shall, as soon as possible, notify the District/Area or Agency Program Manager and the Bridge Management Unit (BMU) in the Bureau of Bridges and Structures for further direction. ISIS Item 113 should be changed to "A" as soon as practical. The Bureau of Bridges and Structures tracks non-scour critical and non-scour susceptible bridges in ISIS using the codes entered for Scour Critical Evaluation Rating (ISIS Item 113). When ISIS Item 113 is changed to "A", the Bridge Management Unit shall be contacted. See "Scour Evaluation Study for Existing Bridges" below.

3.7.5 Scour Evaluation Study for Existing Bridges

A Scour Evaluation Study (SES) considers the hydraulic, geotechnical and structural characteristics of the bridge and the site where it is located. When scour has occurred that exceeds estimated or calculated depths, a new Scour Evaluation Study must re-

examine those characteristics. The study must determine if additional scour could occur with subsequent events before mitigation measures are implemented. The study must also determine if the structure is stable for the scour which has occurred as well as for scour from additional storm events. A scour Evaluation Study is also required for any existing bridge identified as not previously being evaluated for scour.

In order to conduct the new Scour Evaluation Study, the following data is required:

- Information relative to the current event and historic site conditions regarding streambed and channel stability including past observed scour.
- Soil borings or other data indicating the type and properties of the material present at and below the elevation of the streambed.
- Hydraulic data providing information regarding discharge, flow velocities, and backwaters from the current and historic flood events.
- Structural information relative to the type and location of the structure's substructure units.

Coordination between the Bureau of Bridges and Structures and the District / Agency will determine if the study and analysis are required and if they will be conducted by the Bureau of Bridges and Structures, District or Agency personnel, or qualified consultants. The completed study and stability analysis must be submitted to the Bureau of Bridges and Structures for review and approval. The Bureau of Bridges and Structures will make the final determination for a new Scour Critical Evaluation Rating and have it entered in ISIS.

If the study determines that the structure is not stable for the depth of scour incurred or potential future scour, the bridge must be closed, or remain closed until mitigation can be implemented. If the study determines that the structure is still stable for the existing or future scour, the Bureau of Bridges and Structures will determine the required Scour Critical Evaluation Rating and monitoring requirements.

The National Highway Institute (NHI) offers several training courses related to the evaluation of scour at bridges. The following courses are among those offered by the NHI:

- Stream Stability and Scour at Highway Bridges (Course NHI 135046)

- Stream Stability and Scour at Highway Bridges for Bridge Inspectors (Course NHI 135047)
- Countermeasure Design for Bridge Scour and Stream Instability (Course NHI 135048)
- Plan of Action (POA) for Scour Critical Bridges (Course NHI 135085)
- Stream Stability Factors and Concepts (Course NHI 135086)
- Scour at Highway Bridges: Concepts and Definitions (Course NHI 135087)

See Appendix A3-2 for web addresses.

For evaluating scour potential and developing a POA for scour critical bridges, the following references are recommended:

- Federal Highway Administration (FHWA) publication, Hydraulic Engineering Circular (HEC) 18, "Evaluating Scour at Bridges", FHWA-HIF-12-003
- FHWA publication, HEC 20, "Stream Stability at Highway Structures", FHWA-HIF-12-004
- FHWA publication, HEC 23, Volumes 1 & 2 "Bridge Scour and Stream Stability Countermeasures", FHWA-NHI-09-111 & 112
- FHWA Technical Advisory, "Evaluating Scour at Bridges", T5140.23

See Appendix A3-2 for obtaining these reference documents.

3.7.6 Bridge Scour Monitoring System

IDOT has established a contract to provide a Bridge Scour Monitoring System, "BridgeWatch", to notify specific State and Local users when threshold rainfall events occur. This system monitors the National Oceanic and Atmospheric Administration (NOAA) National Weather Service (NWS), NEXRAD rainfall accumulation products, and the United States Geological Survey (USGS) network of stream flow gages to determine when warning and/or alert messages should be sent. A link to the Illinois Department of Transportation BridgeWatch web site is provided at: BridgeWatch (See Appendix A3-9)

When a warning and/or alert threshold is exceeded, notification is sent via e-mail or text message to cell phone numbers provided by the users. Upon notification, an inspector will assess the current condition of the structure to determine what, if any action should be taken to assure the safety of the traveling public. The inspector will then document

the conditions at the site (date, time, water level, bridge condition, debris buildup, approach roadway condition, take pictures, etc.), and enter this information into the BridgeWatch System and/or contact the District/Area or Local Program Manager so they can enter the data. Each District/Area or Agency Program Manager is responsible for determining how their respective inspectors will be notified when a "Warning" and/or "Alert" occurs.

The District/Area and Agency Program Managers are responsible for maintaining their respective users' and inspectors' contact information on an ongoing basis in BridgeWatch and Communication Centers or other offices of contact for local agencies. The District/Area Program Mangers will be able to update the contact information directly in BridgeWatch. The Agency Program Managers will need to contact the Bridge Management Unit in the Bureau of Bridges and Structures to add, modify, and delete this information.

If changes to the warning and/or alert levels in BridgeWatch are proposed, the State Program Manager must review and approve the proposed modifications.

The user manual for BridgeWatch is included in Appendix A3-9 for reference.
Utilizing the individual POA prepared for each scour critical or scour susceptible bridge, inspection personnel must monitor the site during each Routine Inspection, Underwater Inspection if applicable, and subsequent to major storm events as follows:

	Storm Event			
Scour Rating	10 Year	25 year	50 year	100 year
4 or Less	Warning	Alert		
5		Warning	Alert	
6	Warning	Alert		
7 or 8			Warning	Alert

Table 3.7.6.A Scour Monitoring Schedule

Scour Critical Evaluation Rating coded "4": Structures that have ISIS Item 113 coded as "4" should be considered scour susceptible, and require a POA that states it will be monitored when it has passed the 25-year storm event.

Scour Critical Evaluation Rating coded "5": Structures that have ISIS Item 113 coded as "5" are not considered scour susceptible, however, some of these State structures will be included in the Scour Monitoring System in order to obtain statewide coverage of rainfall events.

Scour Critical Evaluation Rating coded "6": All existing bridges over waterways in the inventory have been screened and assigned a Scour Critical Evaluation Rating in ISIS. For all new and replacement structures over waterways, a temporary Scour Critical Evaluation Rating of "6", indicating that a Scour Evaluation Study has not yet been completed, will automatically be assigned upon establishment of a new Structure Record in ISIS. The Bureau of Bridges and Structures will update Item 113 after review and approval of the Scour Critical Evaluation Study.

Scour Critical Evaluation Rating coded "7": Structures that have ISIS Item 113 coded as "7" are considered scour susceptible and require a POA that states it will be monitored when it has passed the 100-year storm event. Once the adequacy of the installed, properly designed countermeasures has been established by passing two design storm events with little or no damage as documented in the scour monitoring system, the rating for ISIS Item 113 can be revised to an "8" and monitoring can be discontinued upon the approval of the State Program Manager in the Bureau of Bridges and Structures.

Scour Critical Evaluation Rating coded "8": A number of bridges previously had a Scour Rating of "3". A mitigation repair was completed and the Scour Rating was changed to "7". After a period of time, the Scour Rating was allowed to be changed to "8". However, the scour mitigation repair may not have been designed to current standards or the calculations for those repairs have not been found. These structures, although having a Scour Critical Evaluation Rating of "8", have been included in the Scour Monitoring System. The bridge may be removed from the Scour Monitoring System once the adequacy of the existing countermeasures has been determined by the Bureau of Bridges and Structures.

Due to the range of conditions that can cause a structure to have a Scour Critical Evaluation Rating of “4 or 5”, the storm event triggering an alert or warning can be modified for site specific conditions upon approval of the State Program Manager.

If a given structure experiences several storm events without producing any scour concerns, the specified storm event triggering a warning/alert can be modified with approval of the State Program Manager.

If users determine BridgeWatch has not adequately estimated the predicted storm event for a given rainfall, the State Program Manager should be contacted to assist in calibrating the system.

Per the schedule from Table 3.7.6.A above, Warnings and Alerts will be generated by BridgeWatch, and notification will be sent via e-mail or text messages to cell phone numbers provided by the users. Appropriate personnel will then be notified for a given structure or structures experiencing the storm event. A “Warning” is provided as advance notification of the potential alert, and no immediate action is required. An “Alert” is a notification to users that a scour critical or scour susceptible bridge has passed the specified storm event, and the structure needs to be inspected to determine if the structure has been adversely impacted by the storm event as follows:

Scour Rating	**Response Time** (Hours)	
	Local	**State**
4 or Less	2	4
5	N/A	24
6	N/A	N/A
7	48	48
8	N/A	96

Table 3.7.6.B Scour Monitoring Response Times

3.7.7 Updating the Scour Critical Rating

The Bridge Management Engineer in the Bureau of Bridges and Structures is responsible for updating the Scour Critical Evaluation Rating (ISIS Item 113), based on reported field data and observations from District and Local Agency inspectors.

To raise the Scour Critical Evaluation Rating from a “4” or less will require completion of a new scour evaluation study for review and approval by the Bridge Management Engineer in the Bureau of Bridges and Structures.

To raise the Scour Critical Evaluation Rating to “7” to reflect the installation of scour countermeasures, the Bureau of Bridges and Structures must review the countermeasure design and installation.

To raise the Scour Critical Evaluation Rating from a “7” to “8” requires that the installed countermeasure has performed adequately through two design storm events with little or no damage. The Bureau of Bridges and Structures must concur.

When actual scour is observed during any inspection that meets or exceeds the criteria in Section 3.7.3, the District/Area or Agency Program Manager must contact the Bridge Management Engineer in the Bureau of Bridges and Structures. ISIS Item 113 should be changed to “A”.

3.7.8 Countermeasures

The FHWA publication, HEC 23 (Vol 1 / Vol 2), “Bridge Scour and Stream Instability Countermeasures” is a recommended source of information for the selection and design of countermeasures to control scour. Within this publication, countermeasures are defined as “measures incorporated into a highway-stream crossing system to monitor, control, inhibit, change, delay, or minimize stream instability and bridge scour problems.” Since monitoring is included within the definition of countermeasures, a properly developed and implemented POA may be considered a countermeasure.

When considering countermeasures and their relevance to the rating assigned for ISIS Item 113, consideration must be given to the methods used to select, design or develop the countermeasures. Only countermeasures that were implemented at the site based on established engineering principles that considered site specific conditions can be considered effective when evaluating scour susceptibility and rating ISIS Item 113.

3.8 Employee and Bridge Inspection Safety

3.8.1 General

It is incumbent on each IDOT, local agency, consultant, and other state agency employee conducting bridge inspections to take every precaution and to follow all standard procedures designed to minimize or avoid placing themselves in undue danger.

IDOT employees are required to read and follow Departmental Order 5-1, "Employee Safety Code", available for employees only on the IDOT Intranet at: https://insideidot.portal.illinois.gov/sites/businessservices/prc/Departmental%20Orders/05-01.pdf

The Employee Safety Code is an Appendix to Departmental Order 5-1 and is available for employees only on the IDOT Intranet at: https://insideidot.portal.illinois.gov/sites/businessservices/prc/Master%20Documents/Employee%20Safety%20Code%202010.pdf

Hard copies of the Employee Safety Code are available by contacting the Bureau of Personnel Management, Occupational, Safety and Health Unit.

In general, the Employee Safety Code prescribes the requirements for safety procedures for many typical work place and field operation situations. The manual is not all-inclusive but provides basic safety requirements and directs employees to specific additional resources and training opportunities.

3.8.2 Bridge Inspection Safety

Within Departmental Order 5-1 are specific guidelines and requirements for personnel engaged in Bridge Inspection activities.

3.8.2.1 Personal Safety

Each employee engaged in Bridge Inspection activities shall have read and be familiar with the Employee Safety Code and have received all required and necessary safety training for their job requirements.

Each employee should be equipped with personal protection including the following:

- Vest
- Hard hat
- Bump cap
- Eye protection
- Ear protection
- Steel-toed footwear
- Personal Floatation Device

3.8.2.2 Worksite Protection and Flagging

The person responsible for traffic control operations must follow the requirements in the "Supplement to the Work Site Protection Manual". All IDOT bridge inspectors should be familiar with this manual and be aware of the hazards of working along-side traffic. The manual is available for employees only on the IDOT Intranet at: https://insideidot.portal.illinois.gov/sites/businessservices/prc/Master%20Documents/Supplement%20to%20the%20Work%20Site%20Protection%20Manual%202012.pdf

3.8.2.3 Fall Protection

Each employee engaged in bridge inspection shall be familiar with all policies, requirements, and equipment as stated in the Employee Safety Code: Fall Protection Plan for Field Activities. The plan is contained in the Employee Safety Code, Section 16.14.

3.8.2.4 Confined Space Entry

Certain types of bridges in Illinois require access to confined spaces while conducting NBIS inspections. Examples include steel box girders, steel box pier caps, concrete box

girders, steel tie girders and arch ribs in tied arch bridges, vaulted abutments, and many buried structures such as culverts, three-sided structures and pipes. All State employees engaged in Confined Space Entry procedures shall be adequately trained in their functional duties prior to any confined space entry.

Each employee engaged in bridge inspection shall be familiar with all policies, requirements, and equipment as stated in the Employee Safety Code: Confined Space Entry Policy. The plan is contained in the Employee Safety Code, Section 21.6.

3.8.3 Non-State Employee Bridge Inspection Personnel

Local Agency employees, other State Agency employees, and consultant personnel engaged in bridge inspections should, in general, be familiar with and follow all OSHA, Department of Labor, or any Federal, State, or Local laws pertinent to bridge inspection activities. Each inspector should consult their agency or company safety policies before conducting any bridge inspection activities.

3.9 Quality Control and Quality Assurance

3.9.1 General

IDOT recognizes that established and documented Quality Control and Quality Assurance (QC/QA) procedures are essential for ensuring that bridge inspections are performed in an appropriate, consistent, and uniform manner by all inspection Program Managers and Team Leaders employed by various agencies having bridge inspection responsibilities throughout the state. Through the application of QC/QA procedures, agencies enhance their ability to obtain accurate inspection information required for determining load capacity and bridge maintenance, repair, rehabilitation and replacement needs. Of utmost importance is the role QC/QA plays for ensuring bridge inspection staff are adequately trained and experienced to readily identify conditions that adversely affect highway safety.

The National Bridge Inspection Standards (NBIS) states that agencies must "assure systematic quality control (QC) and quality assurance (QA) procedures are used to maintain a high degree of accuracy and consistency in the inspection program", and that these procedures shall "include periodic field review of inspection teams, periodic bridge inspection refresher training for Program Managers and Team Leaders, and independent review of inspection reports and computations." In conjunction with these statements regarding QC/QA, the NBIS provides the following definitions:

Quality Control: Procedures that are intended to maintain the quality of a bridge inspection and load rating at or above a specified level.

Quality Assurance: The use of sampling and other measures to assure the adequacy of quality control procedures in order to verify or measure the quality level of the entire bridge inspection and load rating program.

Program Manager: The individual in charge of the program who has been assigned or delegated the duties and responsibilities for bridge inspection, reporting, and

inventory. The Program Manager provides overall leadership and is available to inspection team leaders to provide guidance.

Team Leader: Individual in charge of an inspection team responsible for planning, preparing, performing and documenting field inspection of the bridge.

3.9.2 Personnel Qualifications

The quality of an agency's bridge inspection program is very much dependent on the performance of the Program Manager in charge of the agency's inspection program , and on the Team Leaders leading the inspection teams that perform the field inspections. These individuals must be qualified to perform their duties. The Department has established procedures for reviewing, verifying and certifying the acceptability of the education, training and experience of an individual to function as a Program Manager or Team Leader. Forms BBS 2610 (for Program Manager) and BBS 2620 (for Team Leader) shall be used for documenting the qualifications of Program Managers and Team Leaders. (See Appendix A3-2)

3.9.2.1 Bridge Inspection Training

Federal regulations require all personnel, including registered (note the term is "licensed" in Illinois) professional or structural engineers, managing bridge inspection programs or directing inspections in the field, to have successfully completed a Federal Highway Administration (FHWA) approved comprehensive bridge inspection training course. This requirement is fulfilled by individuals who have successfully completed the "Safety Inspection of In-Service Bridges" course (FHWA-NHI-130055) offered by the National Highway Institute (NHI).

3.9.2.1.1 Training for Underwater Inspections

The NBIS requirement for comprehensive bridge inspection training also extends to divers performing underwater inspections. The NHI Course Number FHWA-NHI-130091, "Underwater Bridge Inspection" course provides an overview of diving

operations that will be useful to Department and Agency personnel responsible for managing Underwater Inspections. This course also fulfills the NBIS bridge inspection training requirement for all divers conducting Underwater Inspections. The NHI Course Number FHWA-NHI-130055, "*Safety Inspection of In-Service Bridges*" will also meet the training requirements for divers. (See Appendix A3-2)

3.9.2.1.2 Fracture Critical Member Inspection Training

Although the training typically provided for personnel performing Routine Inspections provides the basic knowledge needed for performing a Fracture Critical Member (FCM) Inspection, inspectors are highly encouraged to obtain additional training specifically related to the inspection of fracture critical members. The specialized course titled "Fracture Critical Inspection Techniques for Steel Bridges" (FHWA-NHI-130078), which is periodically presented for IDOT by NHI, is highly recommended for both technical and engineering staff engaged in the inspection and evaluation of fracture critical members.

3.9.2.2 Bridge Inspection Experience

NBIS provides the following definition for bridge inspection experience:

> Bridge Inspection Experience: Active participation in bridge inspections in accordance with the NBIS, in either a field inspection, supervisory, or management role. A combination of bridge design, bridge maintenance, bridge construction and bridge inspection experience, with the predominate amount in bridge inspection, is acceptable.

To provide agencies with guidance and clarification of experience levels that would be adequate to satisfy NBIS requirements, FHWA has provided the following statement in regard to the "desired minimum bridge inspection experience level" for personnel engaged in bridge inspections:

Desired Minimum Bridge Inspection Experience Level: The predominate amount, or more than fifty percent, should come from NBIS bridge safety inspection experience. Other experience in bridge design, bridge maintenance, or bridge construction may be used to provide the additional required experience.

When the experience of personnel does not meet the "desired bridge inspection experience level", the State Program Manager and others with delegated program manager responsibilities must perform an in-depth evaluation of the individual's bridge related experience to determine acceptability, as described within Section 3.9.2.4, "Team Leader Qualifications".

3.9.2.3 Program Manager Qualifications

To satisfy IDOT and NBIS qualification requirements to function as a Program Manager in Illinois, an individual must have successfully completed an FHWA approved comprehensive bridge inspection training course and satisfy one of the following:

- Be licensed by the State of Illinois as a Professional Engineer or Structural Engineer; or
- Have ten years of Routine Inspection experience.

Under the current NBIS rules, all state departments of transportation must designate an individual to function as the State Program Manager to provide overall leadership for bridge inspection. The State Program Manager can delegate Program Manager responsibilities to qualified individuals, as needed, to ensure compliance with the NBIS rules.

In accordance with the State Program Manager's authority to delegate Program Manager responsibilities, the Districts' Bridge Maintenance Engineers function as District Program Managers to oversee bridge inspections and the reporting of inspection and inventory data within their regional area of responsibility.

To address the organizational structure of IDOT personnel performing bridge inspections in Region 1, Program Manager responsibilities are further delegated to the Area Bridge Inspection Engineers, who function as Area Program Managers under the direct supervision of the District's Program Manager, after concurrence of qualification by the State Program Manager.

Program Manager responsibilities within the Bureau of Bridges and Structures relative to NBIS inspections for Major Bridge Structures are delegated to the Bridge Inspection Unit Chief of the Bureau of Bridges and Structures, who functions as the Central Program Manager.

Under the direction of the State Program Manager, the Local Bridge Unit Chief within the Bureau of Bridges and Structures functions as the Local Program Manager for matters related to bridges under the jurisdiction of Local Agencies and other state agencies.

Local Agencies shall designate an Agency Program Manager who meets the requirements of this section

Individuals who have been approved by the Department to function as Program Managers are also qualified to function as Team Leaders.

3.9.2.4 Team Leader Qualifications

To be accepted to function as a Team Leader, each candidate must have successfully completed an FHWA approved comprehensive bridge inspection training course. The qualifications of potential Team Leaders are first reviewed by the District/Area or Agency Program Manager who has oversight responsibility for the structures to be inspected. If the District/Area or Agency Program Manager deems an individual's qualifications acceptable for functioning as a Team Leader, the District/Area or Agency Program Manager must forward the documentation of the individual's licensing, training and experience to the State Program Manager for concurrence. Form BBS 2620 shall be

used for the purpose of documenting and submitting Team Leader qualifications to the State Program Manager for concurrence.

NBIS rules provide qualification requirements for engineers and for technical personnel for use in evaluating an individual's qualifications to function as a Team Leader. See Section 3.9.2.4.4 for bridge inspection experience requirements.

3.9.2.4.1 Structural and Professional Engineers as Team Leaders

Individuals who are licensed in Illinois as Professional Engineers and have successfully completed an FHWA approved comprehensive bridge inspection training course are qualified to function as Team Leaders with approval by the State Program Manager. Licensing as a Structural Engineer in Illinois is accepted in lieu of licensing as a Professional Engineer.

3.9.2.4.2 Engineering Personnel as Team Leaders

Engineering Personnel are considered to be graduates of an engineering program approved by the Accreditation Board of Engineering and Technology (ABET), who have received a bachelor's degree in engineering, but are not licensed in Illinois as Professional Engineers. For the purpose of evaluating required experience levels for acceptance as a Team Leader, Engineering Personnel are categorized as follows:

Type 1 – Engineering Personnel: Personnel who have passed the "Fundamentals of Engineering" exam, also known as the Engineer In Training (EIT) exam.

Type 2 – Engineering Personnel: Personnel who have not passed the "Fundamentals of Engineering" exam, also known as the EIT exam.

Based on the guidelines provided by FHWA, Engineering Personnel can function as Team Leaders after the State Program Manager has evaluated their training and

experience and determined that they are qualified. The criteria used for the evaluation of experience is presented in Section 3.9.2.4.4, "Review of Bridge Inspection Experience".

3.9.2.4.3 Technical Personnel as Team Leaders

For the purpose of evaluating required experience levels for acceptance as a Team Leader, Technical Personnel are categorized as follows:

Type 1 - Technical Personnel: Personnel who have been certified as a Level III or IV Bridge Safety Inspector under the National Society of Professional Engineer's (NSPE) program for National Certification in Engineering Technologies (NCET).

Type 2 – Technical Personnel: Personnel who have an associate's degree in engineering or engineering technology from a college or university accredited by ABET.

Type 3 – Technical Personnel: Personnel who have not received formal education or training resulting in a bachelor's degree in engineering, an associate's degree related to engineering or a certification as a Level III or IV Bridge Safety Inspector.

The criteria used for the evaluation of experience is presented in Section 3.9.2.4.4, "Review of Bridge Inspection Experience".

3.9.2.4.4 Review of Bridge Inspection Experience

Based on the guidelines provided by FHWA, Engineering Personnel or Technical Personnel can function as Team Leaders after the State Program Manager has evaluated their training and experience and determined that they are qualified based on one of the criteria provided. The values, provided in the following table for Bridge Related Experience and Performance of NBIS Inspections, represent the level of experience required to satisfy criteria requirements:

Team Leader Bridge Inspection Experience Requirements (Criteria for Inspector's Experience Evaluation)		
Personnel Type	Bridge Related Experience (years)	Performance of NBIS Inspections (months)
Type 1 – Engineering Personnel with EIT	2	12
Type 2 – Engineering Personnel without EIT	4	24
Type 1 – Technical Personnel - NSPE-NCET certified	0	0
Type 2 – Technical Personnel - Associate Degree	4	24
Type 3 – Technical Personnel	5	30

TABLE 3.9.2.4.4

Criteria #1: An individual having accumulated at least the shown number of years of bridge related experience over the course of their career through the performance of NBIS bridge inspections, bridge design, bridge maintenance, or bridge construction activities, with more than the shown number of months of the accumulated bridge related experience obtained through the performance of Routine Inspections, meets the experience requirements to qualify as a Team Leader. Technical Personnel meeting these requirements have the "desired minimum NBIS bridge inspection experience level" preferred by FHWA for acceptance as Team Leader, and in-depth evaluation of the individual's experience by the State Program Manager to verify qualifications is not required. However, the performance of the Team Leader is subject to review by the State Program Manager to ensure the quality of inspections, and that assignments are consistent with the experience of the individual.

Criteria #2: An individual having accumulated at least the shown number of years of bridge related experience over the course of their career through the performance of NBIS bridge inspections, bridge design, bridge maintenance, or bridge construction activities, with more than the shown number of months of the accumulated bridge

related experience obtained through the performance of Routine Inspections and other various bridge inspection activities, meets the experience requirements to qualify as a Team Leader, if the Program Manager has evaluated and approved the potential Team Leader's overall experience as acceptable. A portion of the individual's bridge inspection experience must have been acquired through the performance of Routine Inspections, with the remainder of the individual's bridge inspection experience derived from inspections associated with bridge design, bridge construction inspections, and bridge maintenance inspections

Criteria #3: An individual having less than the shown number of years of bridge related experience accumulated over the course of their career through the performance of NBIS bridge inspections, bridge design, bridge maintenance, or bridge construction activities, with a portion of their accumulated bridge related experience obtained through the performance of Routine Inspections, meets the experience requirements to qualify as a Team Leader only if both the State Program Manager and FHWA concur that the individual's experience is acceptable. This criterion should only apply to special situations involving highly qualified individuals performing NBIS bridge inspections that require specialized knowledge or training on unusual or complex bridges.

Note that in all cases, a portion of the experience accumulated by Technical Personnel must have been derived from the performance of Routine Inspections in order to be considered qualified to function as a Team Leader, except as noted in Table 3.9.2.4.4 for NSPE-NCET certified inspectors.

3.9.2.5 Load Rating Personnel Qualifications

To satisfy both NBIS and Illinois statutes, bridge load ratings must be performed by or under the direct supervision of an Illinois Licensed Structural Engineer, and the Illinois Licensed Structural Engineer must affix their seal (with expiration date noted) and signature to the bridge load ratings. In addition, Illinois statutes assign the responsibility for the final determination of the safe load-carrying capacity for all bridges in Illinois to the Department. To satisfy this statutory requirement, all bridge load ratings performed by Illinois Licensed Structural Engineers must be submitted to the Department's Bureau of Bridges and Structures for review and approval in order for the recommended load rating to be accepted for inclusion in the National Bridge Inventory database, and for any recommended load restrictions to be accepted as legally binding.

3.9.3 Quality Control

The quality control (QC) procedures established by the Department are intended to define, monitor and document the qualifications and performance of personnel engaged in the management of inspection programs, the performance of field inspections, and the load rating of bridges. Factors related to the maintenance of effective QC procedures are:

- Review of bridge inspection reports
- Inspector's performance
- Personnel qualifications
- NBIS bridge inspection reports in the Bridge File
- NBIS data verification
- Bridge inspection refresher training
- Identifying special skills, training or equipment
- Monitoring of inspector's production rates and quality of bridge inspections

3.9.3.1 Review of Bridge Inspection Reports

To ensure that the inspection reports submitted by Team Leaders are appropriate and acceptable for submittal as data for the National Bridge Inventory, all inspection reports

must be reviewed by the Central, District/Area, or Agency Program Manager, as applicable, prior to the data being entered in ISIS. The depth of routine reviews of inspection reports is to be determined by the Central, District/Area, or Agency Program Manager based on the experience level of Team Leaders and the type, age and environmental conditions of the structures being inspected.

Program Managers must monitor each inspector's production rates (number of bridges inspected per day) to ensure that each inspection is of high quality and is conducted properly. The Bridge Management Unit also monitors all inspector's production rates and will contact the responsible Program Manager if rates appear excessive.

3.9.3.2 Inspector's Performance

District and Area Program Managers and the Central Program Manager must conduct in-depth reviews of the field procedures of all Team Leaders functioning under their supervision to ensure that inspections are being performed in an appropriate, consistent and uniform manner.

At least once every 24 months, Program Managers must accompany each Team Leader to observe the performance of NBIS bridge inspections on at least three (3) structures over the course of a 30 day period. Program Managers are required to complete Form BBS 2790 for each Team Leader. (See Appendix A3-2).

The Central Program Manager must accompany each Team Leader to observe the performance of NBIS bridge inspections on at least 10% of structures over a 12 month time period due to the complexity and duration of the major structure inspections.

District and Area Program Managers should choose inspections of different structure types and include a Fracture Critical Member Inspection, when possible, for the purpose of monitoring inspector's performance in a variety of circumstances. The District and Area Program Manager should increase the number of bridge inspections monitored or reduce the period of time between inspection-monitoring as needed to address concerns

with Team Leader's performance. If the District and Area Program Manager determines a Team Leader is not capable of functioning at an appropriate level to ensure adequate inspection procedures, the individual should no longer be used as a Team Leader, and the situation must be reported to the State Program Manager for final resolution.

3.9.3.3 Personnel Qualifications

The Bridge Management Unit maintains documentation of the qualification approvals and concurrences issued for all Program Managers and Team Leaders employed by the Department and by other agencies. The Bridge Management Unit also maintains documentation of performance deficiencies reported by Central, District/Area, or Agency Program Managers for resolution.

Central, District/Area, or Agency Program Managers must maintain documentation relative to the qualifications of themselves and the Program Managers or Team Leaders functioning under their direction within their designated area of responsibility. A separate file containing documentation of education, professional registrations, training and certifications received from the State Program Manager must be maintained for each Program Manager or Team Leader. In addition, the file must contain documentation of Bridge Inspection Performance Reviews performed to monitor the bridge inspection procedures used by the individual. The documentation for all inspection personnel functioning in a District or Agency should be located in a central and common location that is maintained and readily accessible by the District/Area or Agency Program Manager

3.9.3.4 NBIS Bridge Inspection Reports in the Bridge File

A Bridge File is a collection of required and optional information representing a complete history of a bridge. The Bridge File should contain National Bridge Inventory (NBI) data, design plans and specifications, construction records, including as-built plans, maintenance and repair records, and all NBIS bridge inspection records.

The Manual for Bridge Evaluation (MBE) provides the following guidance for the maintenance of a Bridge File:

- Bridge Owners should maintain a complete, accurate, and current record of each bridge under their jurisdiction. Complete information, in good usable form, is vital to the effective management of bridges. Furthermore, such information provides a record that may be important for repair, rehabilitation, or replacement.

- A bridge record contains the cumulative information about an individual bridge. It should provide a full history of the structure, including details of any damage and all strengthening and repairs made to the bridge. The bridge record should report data on the capacity of the structure, including the computations substantiating reduced load limits, if applicable.

A separate file must be maintained for each structure. The documentation for all bridges in a District or Agency should be located in a central and common location that is maintained and readily accessible by the Team Leader and the District/Area or Agency Program Manager.

A Bridge File Checklist must be completed and updated, as required, for each bridge and stored with the Bridge File. A complete list of required and optional items in the Bridge File and a copy of the Bridge File Checklist are available in Appendix A3-10.

It is recognized that it is not practical or necessary to physically store all required items in the file. However, the actual location of each item should be referenced on the Bridge File Checklist. This can include separate file locations, plan stacks, electronic files, databases, and data in document storage systems, where applicable.

3.9.3.5 NBIS Data Verification

3.9.3.5.1 Recognizing Errors, Omissions, or Changes in the Field

When performing field inspections, Team Leaders and accompanying staff should use the Inspector's Inventory Report (S-114) or Master Structure Report (S-107) to assist them in recognizing any readily apparent errors, omissions, or changes in structure

inventory data. Information regarding errors, omissions and changes should be provided to the District/Area or Agency Program Managers and subsequently forwarded to Department staff responsible for the data input of NBIS inventory information.
(Also see Section 3.2.2)

For rehabilitated, replaced and new structures, the "Inventory Data" shown on the first page of the Master Structure Report shall be reviewed to verify that it is in agreement with the information provided on the as-built structure plans. The District Program Development staff is responsible for input and accuracy of inventory data for IDOT maintained structures. After the Initial Inspection, Central or District/Area Program Managers' staff shall review the inventory data and forward any errors, omissions, or changes in inventory data to District staff responsible for data input. For Local Agency structures, after the Initial Inspection, the Agency Program Manager shall review the inventory data and forward any errors, omissions, or changes in inventory data to Department staff responsible for the data input.

3.9.3.5.2 Resolution of Inspection Errors or Omissions

During the review of inspection reports or the monitoring of field bridge inspection procedures, the Central, District/Area, or Agency Program Manager must note data errors or omissions and provide personnel responsible for their occurrence with directions that will eliminate similar incidents in the future. For minor reporting deficiencies, the initial resolution of the findings may be in the form of verbal instructions by the Program Manager to the Team Leader with a note to the Team Leader's file, if considered necessary by the Program Manager. For major deficiencies, such as those that result in the assignment of inappropriately high condition ratings to deteriorated structures or the omission of data concerning critical structural deficiencies from an inspection report, the Program Manager must provide documentation to the Team Leader's file describing the inspection report deficiency and the measures taken to both correct the inspection deficiency and to prevent the reoccurrence of the inspection deficiency.

If the Team Leader continues to provide inspection reports or to perform field inspections in a manner that does not address a previously noted major deficiency, the Program Manager should no longer utilize the Team Leader for NBIS bridge inspection purposes, and the situation must be reported to the State Program Manager for final resolution.

3.9.3.6 Bridge Inspection Refresher Training

All Program Managers and Team Leaders must receive periodic NBIS bridge inspection refresher training at intervals not to exceed 60 months. However, each Program Manager must evaluate the performance and experience level of each Team Leader performing field inspections within their designated area of responsibility and, if necessary, establish an interval for bridge inspection refresher training that is less than the maximum allowed and appropriate to maintain inspection quality.

The “Bridge Inspection Refresher Training” class (FHWA-NHI-130053) is available through the NHI and the Department, and is utilized to satisfy NBIS bridge inspection refresher training needs.

The Department will also provide an Illinois specific “Bridge Inspection Calibration Class” to afford inspection personnel an opportunity to fulfill bridge inspection refresher training requirements. The “Bridge Inspection Calibration Class” only meets the refresher training requirements for the State of Illinois. It is not currently accepted as refresher training in other States by FHWA.

The “Bridge Inspection Calibration Class” cannot serve to satisfy refresher training requirements for two consecutive periods. The “Bridge Inspection Refresher Training” class will be required at least every other refresher training period.

When reviewing Team Leader performance, Program Managers may determine that the NHI class is the more appropriate choice for addressing deficiencies noted in a Team Leader’s performance.

3.9.3.7 Identifying Special Skills, Training, and Equipment

Inspection teams performing Fracture Critical Member (FCM) Inspections, Underwater Inspections, or Complex Bridge Inspections must have skills, training and equipment suitable for the inspection being performed. NHI offers various courses that address the above mentioned inspections. Central, District/Area, or Agency Program Managers should utilize these courses for training purposes, as needed, to ensure that personnel are knowledgeable of required inspection methods and procedures for the structures assigned to them for inspection.

When required to ensure adequate inspection, Central, District/Area, or Agency Program Managers must ensure that personnel familiar with non-destructive testing methods are available to the inspection team to perform follow-up investigations for visually identified defects, especially those located within an FCM. Equipment such as man-lifts, safety harnesses, boats, probing poles, sonar-depth-finders and life vests must be available, as needed, to address the type of inspection being performed.

3.9.4 Quality Assurance

Quality Assurance (QA) measures are required to ensure that established Quality Control (QC) procedures are being followed and are effective for ensuring bridge safety on all public roadways. Quality Assurance reviews of all agencies are performed to assure the quality of bridge inspections and bridge load ratings. The State Program Manager will conduct the Quality Assurance review. When the State Program Manager is unavailable, the responsibility may be delegated to the Central Program Manager, Local Program Manager or other Bridge Management staff.

3.9.4.1 Quality Assurance Reviews

The Department will conduct annual Quality Assurance reviews in one (1) IDOT District and seventeen (17) Local Agencies to determine the adequacy and effectiveness of the Quality Control procedures utilized for bridge inspections and load ratings. The intervals

between these reviews may be reduced in response to agency personnel changes or to address findings from previous Quality Assurance reviews.

3.9.4.1.1 Office Reviews

Quality Assurance reviews include a review of the office files and procedures used to document inspections, to track personnel performance and qualifications, and to schedule follow-up inspections or repairs to address NBIS bridge inspection findings. The procedures used to establish inspection schedules and to select Team Leaders and inspection personnel will be included in the Quality Assurance review. During the office review, the District/Area or Agency Program Managers, and members of their staff included in the review process, will be requested to provide information describing the procedures employed within their designated area of responsibility to ensure bridge safety and compliance with NBIS.

3.9.4.1.2 Field Reviews

Quality Assurance reviews include field observations of at least seven (7) bridges that are within the Agency's jurisdiction. The structures chosen for review should vary in regard to "Main Structure Material" and "Main Structure Type" (ISIS Items 43A and 43B respectively). An effort should be made to include bridges with condition ratings ranging between "6" (satisfactory condition) to "3" (serious condition) for Deck, Superstructure, Substructure or Culvert (ISIS Items 58, 59, 60 and 62 respectively) and, whenever possible, to include structures coded as Scour Critical (ISIS Item 113 coded "3" or less). When possible, the review should also include bridges requiring Underwater, Fracture Critical Member, or Special Inspections, and bridges with unusual or drastic changes in primary condition ratings (greater than plus or minus one rating point).

The District/Area or Agency Program Manager or a suitable substitute must be present during the Quality Assurance field review. Personnel conducting the Quality Assurance field review will refer to the Bridge Files maintained by the District/Area or Agency Program Manager to compare the inspection information contained in the files to the conditions observed during the Quality Assurance field review. A Master Structure

Report should be obtained for reference by Quality Assurance staff during the field review of each bridge. The Quality Assurance staff should note inventory data errors or omissions and observed condition rating related discrepancies. Conditions that could affect load ratings will be noted during the Quality Assurance field review. Follow-up must occur to ensure the noted conditions have been considered in the current load rating.

3.9.4.2 Final Quality Assurance Review Report

A “Final Quality Assurance Review Report” noting commendable practices, review findings and the measures to be taken to address Quality Control deficiencies will be provided to the reviewed Program Manager. When requested and noted in the Final Quality Assurance Review Report, the reviewed Program Managers must provide the State Program Manager with documentation verifying that corrective measures described in the report have been implemented.

The Department will provide FHWA with a copy of all Final Quality Assurance Review Reports.

3.9.4.3 Annual Quality Assurance Review Report

The Department will assemble an “Annual Quality Assurance Report” summarizing the findings of each agency’s Quality Assurance review.

3.10 Coordination with the Illinois State Toll Highway Authority

In order to establish National Bridge Inspection Standards (NBIS) inspection and reporting responsibilities for structures jointly maintained by the Illinois State Toll Highway Authority (ISTHA) and IDOT or a Local Agency, guidelines were developed and mutually agreed to in 1996. The guidelines provided in this Section have been in effect since January 1, 1997.

3.10.1 Performance of ISTHA Inspections

ISTHA will perform the periodic inspections required by the NBIS to determine the current condition ratings for all jointly maintained bridges. The inspections performed by ISTHA will provide condition ratings for the entire jointly maintained structure, but will not provide the joint maintaining agency with detailed inspection information needed to determine the extent and cost of maintenance and repairs. IDOT and Local Agencies will perform the inspections necessary to collect in-depth information for determining maintenance and repair needs for the portions of the structure for which they have maintenance responsibility.

3.10.2 Interagency Coordination of ISTHA Inspections

Personnel involved with bridge inspection and associated with ISTHA, located at 2700 Ogden Avenue, Downers Grove, Illinois 60515, can be contacted by phone at 630/241-6800.

ISTHA will provide the joint maintaining agency with inspection scheduling information. The scheduling information will be provided to the joint maintaining agency sufficiently in advance of the scheduled date of inspection to allow the agency the opportunity to accompany ISTHA personnel during the NBIS inspection. The name and telephone number of the ISTHA contact person will be included with the scheduling information provided by ISTHA. The joint maintaining agency will notify the designated ISTHA contact person no later than one week prior to the scheduled date of inspection of its intention to either participate or not participate in the NBIS inspection. ISTHA will notify agencies choosing to participate in the inspection of scheduling changes.

3.10.3 ISTHA Inspection Permit Requirements

In order to obtain the inspection information required to establish maintenance and repair needs, IDOT and Local Agency inspectors will require access to ISTHA right-of-way. IDOT and Local Agency personnel should obtain an access permit and/or an authorization letter from ISTHA before allowing their personnel to perform inspections within the right-of-way of ISTHA. ISTHA will issue authorization letters to the joint maintaining agencies to allow them access to structures to perform routine inspection operations. The authorization will be in the form of a letter from the Permit Engineer of ISTHA stating that the jointly maintaining agency is authorized to perform inspection operations for specific structures within ISTHA right-of-way for a designated period of time. For non-routine inspection operations, such as those requiring the temporary closure of traffic lanes, the joint maintaining agency must obtain an access permit from ISTHA. The joint maintaining agency will be required to provide adequate and appropriate traffic control when performing inspections within ISTHA right-of-way. The procedures provided in these guidelines for obtaining concurrence from ISTHA for inspection activities is applicable only when the inspection operations are being performed by personnel employed by IDOT or a county highway department. Consulting engineers, or units of local government other than county highway departments, must contact ISTHA for specific information on the permit requirements for the inspection activities they intend to perform.

3.10.4 Reporting ISTHA Inspection Information

ISTHA will report the NBIS inspection information for jointly maintained structures to IDOT for recording in ISIS. The inspection information will be preferably submitted to IDOT on a monthly basis to ensure that the information is placed in ISIS in a timely manner to avoid inspected bridges being reported as not meeting the periodic NBIS inspection requirement. Inspection information for bridges jointly maintained by ISTHA and IDOT should be submitted to the Region/District Bureau of Operations. Inspection information for structures jointly maintained by ISTHA and a Local Agency should be submitted to the District Bureau of Local Roads and Streets, and a copy of the reported inspection should be simultaneously provided to the Local Agency. IDOT or Local Agency personnel will contact ISTHA to resolve discrepancies noted in the NBIS

inspection information submitted to IDOT by ISTHA. (NBIS inspection information for structures under the exclusive jurisdiction of ISTHA should be submitted to the Planning Services Section of the Bureau of Urban Program Planning in the Central Office of Planning and Programming).

3.11 Inspection of Non-NBIS Structures

3.11.1 General

The State of Illinois is responsible for establishing policies and procedures to ensure the safety of structures serving the traveling public, including those that are not addressed by federal regulations as provided by the National Bridge Inspection Standards (NBIS). Federal regulations requiring periodic bridge inspections to ensure safety apply only to structures that 1) carry a public roadway and 2) have an opening greater than 20 feet measured along the center of the roadway. Structures that do not meet either of these conditions are considered to be "Non-NBIS Structures".

In order to track the existence and condition of Non-NBIS Structures that could significantly affect highway safety, Structure Inventory and Appraisal (SI&A) information is maintained for selected bridges in the Illinois Structure Information System (ISIS). This Section provides information related to the selection of Non-NBIS Structures that should be included in the ISIS and the inspection of those structures.

3.11.2 Small Bridge Inspection Program

To address the safety of the smaller structures not subject to NBIS requirements, IDOT developed the Small Bridge Inspection Program (SBIP). For the purpose of establishing inspection policies and procedures for this program, the following definition for Small Bridge has been established by the Department:

> Small Bridge: A structure, including supports, erected over a depression or an obstruction, such as water, highway, or railway, and having a track or passageway for carrying traffic or other moving loads, and having an opening, measured along the center of the roadway of 6 feet or greater, but not greater than 20 feet, between undercopings of abutments or spring lines of arches, or extreme ends of openings for multiple boxes; it may also include multiple pipes, where the clear distance between openings is less than half of the smaller contiguous opening and at least one of the pipes has an inside diameter of 60-inches or greater.

When measuring the opening referenced in the definition of Small Bridge, the guidelines provided for determining "AASHTO Bridge Length" (ISIS Item 112) in the Structure Information and Procedure (SIP) Manual should be used. The following diagram provides guidance for measuring the AASHTO Bridge Length for multiple-pipe culverts:

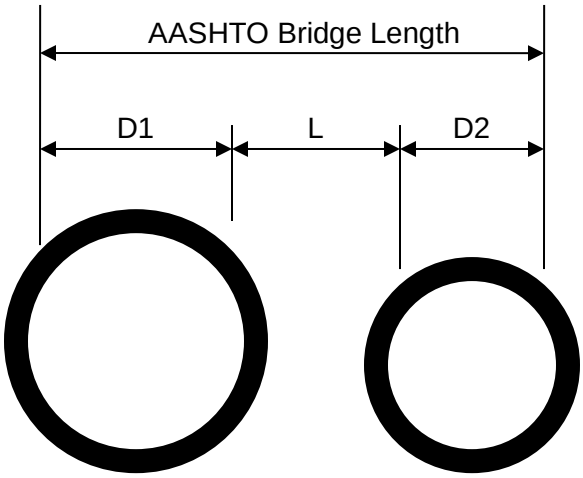

When determining the AASHTO Bridge Length (ISIS Item 112) for multiple pipe installations, the value used for the distance between pipes cannot be greater than half of the smaller opening on either side (L ≤ ½ x D2).

Figure 3.11.2-1

BRIDGE LENGTH FOR MULTI-PIPE CULVERTS

The SBIP is applicable to all structures under the jurisdiction of the Department that serve the traveling public. Local agencies are not required to adopt SBIP for the inspection of structures under their jurisdiction. However, in order to ensure highway safety, local agencies should perform inspections of the Small Bridges under their jurisdiction utilizing either SBIP or policies and procedures developed by the agency to specifically address the inspection and safety of the highway system under their jurisdiction.

3.11.2.1 Small Bridge Inventory and Appraisal

All Small Bridges under the jurisdiction of the Department must be included in ISIS. The SIP Manual provided by the Office of Planning and Programming should be used for guidance when entering SI&A information. Small Bridges must be assigned Structure Numbers (ISIS Item 3 and 8A) using the same format utilized for NBIS bridges.

Although the Region/District may enter all of the information typically required for a bridge to satisfy NBIS requirements, it is not necessary to do so in order to establish a record for a Small Bridge in the ISIS. To establish a Small Bridge record, the following ISIS items are required at a minimum:

ISIS Items Required for Small Bridges

Minimum ISIS Items Needed to Issue a Structure Number

- Item 3B (Maintenance County)
- Item 3B1 (Maintenance Township)
- Item 21 (Maintenance Responsibility)
- Item 22A (Reporting Agency)
- Item 41 (Bridge Status)
- Item 42A (Type Service ON)
- Item 42B (Type Service UNDER)
- Item 38 (Navigation Control)

Minimum ISIS Items Needed to Link a Bridge to an Existing Road

- Item 1A (Key Route Type)
- Item 1B (Key Route Number)
- Item 1D (Key Route Appurtenance Type)
- Item 1G (Key Route Station)
- Item 3A (Inventory County)
- Item 12 (Link Indicator)
- Item 28 (Number Of Lanes)
- Item 102 (One Or Two Way Traffic)

Minimum Items Related to Bridge Characteristics

- Item 6 (Feature Crossed)
- Item 7 (Facility Carried)
- Item 9 (Location Description)
- Item 43A (Main Structure Material)
- Item 43B (Main Structure Type)
- Item 49 (Structure Length)
- Item 62E (Culvert Fill Depth)
- Item 107A (Deck Structure Thickness)
- Item 108D (Total Deck Thickness)
- Item 112 (AASHTO Bridge Length)

Minimum Items Related to Inspection

- Item 58 (Deck Condition)
- Item 59 (Superstructure Condition)
- Item 60 (Substructure Condition)
- Item 61 (Channel & Channel Protection Condition)
- Item 62 (Culvert Condition)
- Item 91 (Inspection Interval)

Load Rating Codes (to be entered by the Bureau of Bridges and Structures)

- Item 63 (Method Used To Determine Operating Rating)
- Item 64B1 (Operating Rating)

- Item 65 (Method Used To Determine Inventory Rating)
- Item 66B1 (Inventory Rating)
- Item 66C (Last Rating Date)
- Item 70 (Bridge Posting Level)
- Item 70A1 (Allowable Single Unit Weight Limit – Tons)
- Item 70A2 (Posted Single Unit Vehicle Weight Limit)
- Item 70B1 (Allowable Comb. Vehicle Type 3S-1 Weight Limit)
- Item 70B2 (Posted Comb. Vehicle Type 3S-1 Weight Limit)
- Item 70C1 (Allowable Comb. Vehicle Type 3S-2 Weight Limit)
- Item 70C2 (Posted Comb. Vehicle Type 3S-2 Weight Limit)
- Item 70D1 (Allowable One Truck At A Time (OTAT) Indicator)
- Item 70D2 (Posted One Truck At A Time)

Records related to bridge design plans or as-built plans must be maintained for Small Bridges. The Bureau of Bridges and Structures maintains an archive of bridge plans, which includes Small Bridges. The Bureau of Bridges and Structures routinely updates the archive by obtaining plan information prior to the award of contracts for the construction of new bridges. However, when a Small Bridge is constructed as part of a roadway project, rather than as a stand-alone bridge contract, the Bureau of Bridges and Structures relies on the Regions/Districts to identify the Small Bridges included in the roadway contract. Regions/Districts must review the contract plans for roadway projects to identify structures that satisfy the definition of Small Bridge, and information regarding the Small Bridges must be forwarded to the Bureau of Bridges and Structures for inclusion in their bridge plan archives.

3.11.2.2 Routine Inspections for Small Bridges

In order to ensure highway safety, Routine Inspections must be performed for Small Bridges. Since many of the Small Bridges can be classified as culverts, which are buried structures that are somewhat protected from direct contact with traffic and other destructive elements, extended inspection intervals are appropriate for many Small Bridges that are in good or better condition. Small Bridges that cannot be classified as culverts should have inspection intervals consistent with those applicable to larger structures. Inspection intervals for Small Bridges must not exceed the maximum Inspection Interval (ISIS Item 91) provided in this Section.

For the purpose of determining inspection intervals for Small Bridges, a “Buried Structure” is defined as follows:

Buried Structure: A culvert having 2-feet or more of fill, which includes pavement material, base material and sub-grade, over the highest element of the culvert located within the traveled way and shoulders of the roadway.

ROUTINE INSPECTION INTERVAL FOR BURIED STRUCTURES **MAIN STRUCTURE TYPE (ISIS ITEM 43B) CODED "19"** **AND CULVERT FILL DEPTH (ISIS ITEM 62E) IS 2-FEET OR GREATER**	
Condition Rating Assigned to Culvert Condition (ISIS Item 62)	Maximum Inspection Interval (months)
"7", "8" or "9" (Good or Better Condition)	72
"5" or "6" (Fair or Satisfactory Condition)	48
"4" (Poor Condition)	24
"3" (Serious Condition)	12
"2" (Critical Condition)	12 or less (See Note)
"1" or "0"	Bridge Closed

TABLE 3.11.2.2.A

Note: A maximum Inspection Interval will be determined on a case by case basis after a Load Rating Inspection and analysis has been performed. A Special Inspection may also be required at intervals less than the Maximum Inspection Interval.

ROUTINE INSPECTION INTERVAL FOR NON-BURIED STRUCTURES MAIN STRUCTURE TYPE (ISIS ITEM 43B) NOT CODED "19" OR MAIN STRUCTURE TYPE (ISIS ITEM 43B) CODED "19" AND CULVERT FILL DEPTH (ISIS ITEM 62E) IS LESS THAN 2-FEET	
Lowest Condition Rating Assigned to Superstructure Condition (ISIS Item 59) Substructure Condition (ISIS Item 60) or Culvert Condition (ISIS Item 62)	Maximum Inspection Interval (months)
"5", "6", "7", "8", or "9" (Fair or Better Condition)	48
"4" (Poor Condition)	24
"3" (Serious Condition)	12
"2" (Critical Condition)	12 or less (See Note)
"1" or "0"	Bridge Closed

TABLE 3.11.2.2.B

Note: A maximum Inspection Interval will be determined on a case by case basis after a Load Rating Inspection and analysis has been performed. A Special Inspection may also be required at intervals less than the Maximum Inspection Interval.

3.11.3 Ancillary Structures

There are many structures serving public highways that are smaller than NBIS bridges and Small Bridges, as described in the following definition for Ancillary Structures:

> Ancillary Structure: A structure, including supports, erected over a depression or an obstruction, such as water, or highway, and having a passageway for carrying traffic or other moving loads, and having an opening, measured along the center of the roadway to be less than 6 feet between undercopings of abutments or spring lines of arches, or extreme ends of openings for multiple boxes; it may also include multiple pipes, where the clear distance between openings is less than half of the smaller contiguous opening.

Although statewide policies and procedures for the inspection of Ancillary Structures are not established, the Department and local agencies are responsible for the maintenance

of the Ancillary Structures under their respective jurisdictions. The policies and procedures employed for addressing Ancillary Structure issues must adequately address highway safety, and each Region/District and local agency must evaluate how to apply available resources to the task of inspecting, maintaining, repairing and replacing Ancillary Structures within its jurisdiction.

3.11.4 Structures Not Carrying Public Roadways

It is not uncommon for a structure that does not carry a public roadway to be located over a highway carrying traffic. Prime examples of these types of structures are bridges that carry a railroad or a bicycle/pedestrian trail over a public highway. Since these bridges do not carry public roadways, the NBIS rules are not directly applicable. However, all bridges crossing public roadways must be included in the ISIS to document the vertical and horizontal clearances provided for vehicles passing under the bridge. The tracking of overhead Non-NBIS Structures:

- Assists the jurisdictional agency with monitoring clearances for the movement of Oversize Vehicles and the planning of highway improvement projects;
- Satisfies the Federal Highway Administration (FHWA) requirement that vertical and horizontal clearance be included in the ISIS for all bridges crossing the National Highway System (NHS). Information identifying NHS routes is available on the FHWA web site at http://www.fhwa.dot.gov/planning/national_highway_system/

Although Routine Inspections are not required by federal regulations for Non-NBIS Structures, the agency or entity with ownership of the structure is responsible for ensuring the safety of the bridge, and this responsibility for safety extends to the protection of traffic traveling under the structure. The following guidance is provided in regard to addressing Non-NBIS Structures crossing over public roadways:

Overhead Structure and Roadway Owned by Same Agency: If the Department, another state agency or a local agency has 1) the jurisdictional responsibility for a public roadway; and 2) the jurisdictional responsibility for a Non-NBIS Structure passing over that roadway, the agency should treat the bridge in the same manner as a structure subject to NBIS regulations. This would entail applying the policies and procedures presented in the IDOT Structure Information and Procedure Manual

to ensure that inventory information is included in the ISIS. Routine Inspections shall be performed at the same interval provided in Table 3.11.2.2.B

The inspection should follow typical NBIS policies for a Routine Inspection except that it may be limited to accessible areas of the structure for a visual assessment. Unless there is a visually apparent concern, a Hands-On Inspection will not typically be required.

IDOT, as well as several other agencies, owns and maintains a number of railroad structures that carry private rail traffic over highways. Inspection of these structures will require contact with the rail company or companies that operate on that line and approval obtained prior to entering their right-of-way. Railroad flagmen may be required by the rail company before inspection of the structure can be performed.

Overhead Structure and Roadway Owned by Different Entities: The Entity with ownership of a Non-NBIS Structure is responsible for establishing policies and procedures that ensure the safety of the structure and that of the persons crossing on and under the bridge. If, during the course of normal operations, the Department, another state agency, or a local agency with responsibility for a public roadway passing under a Non-NBIS Structure owned by another entity should note hazardous conditions, the entity with ownership of the structure should be immediately notified of the conditions posing the hazard. The agency with jurisdiction of the roadway should take actions necessary to protect traffic passing under the bridge until the owner of the overhead structure has taken corrective actions.

Overhead Structure Over Non-Public Roadway: If a situation should be presented, such that the Department or other state agency is the jurisdictional agency for a Non-NBIS Structure, which crosses over a traveled way that is not a public roadway and is under the jurisdiction of another entity, inventory information should be documented and inspections should be conducted as described above for “Overhead Structure and Roadway Owned by Same Agency”.

Section 4 - Ratings & Permits

Table of Contents

4.1 General 4.1-1

4.1.1 Purpose and Scope 4.1-1
4.1.2 National Bridge Inspection Standards 4.1-2
4.1.3 Illinois Vehicle Code 4.1-3
4.1.4 Structural Engineering Act 4.1-3
4.1.5 Small Bridge Inspection Program 4.1-4
4.1.6 Federal Bridge Formula 4.1-4
4.1.7 Overweight Vehicle Permits 4.1-5
4.1.8 Weight Limit Posting 4.1-6
4.1.9 Rating Factors 4.1-7
4.1.10 Highway Systems 4-1-7
4.1.10.1 Article 2 Highway System 4-1-8
4.1.10.2 Other Highway Systems 4-1-9

4.2 Structure Analysis 4.2-1

4.2.1 Method of Analysis 4.2-1
4.2.1.1 Rating Specifications 4.2-2
4.2.1.2 Rating Factors 4.2-3
4.2.2 Analysis Software 4.2-4
4.2.2.1 AASHTOWare Bridge Rating (Virtis) 4.2-5
4.2.2.2 Bentley – Load Analysis and Rating System (LARS) 4.2-5
4.2.2.3 Bentley – Structure Analysis and Design (STAAD) 4.2-6
4.2.3 Structure Information 4.2-6
4.2.4 Material Strength 4.2-9
4.2.5 Structure Elements Analyzed 4.2-11
4.2.5.1 Superstructure Elements 4.2-11
4.2.5.1.1 Decks 4.2-11
4.2.5.1.2 Reinforced Concrete Slabs 4.2-12
4.2.5.1.3 Concrete Stringers, Beams and Girders 4.2-12
4.2.5.1.4 Steel Stringers, Beams and Girders 4.2-13
4.2.5.1.5 Floor Beams 4.2-13
4.2.5.1.6 Trusses 4.2-14
4.2.5.1.7 Cables and Hangers 4.2-14
4.2.5.1.8 Pin and Link Connections 4.2-14
4.2.5.1.9 Precast Concrete Beams 4.2-15
4.2.5.1.10 Precast Prestressed Concrete Beams 4.2-15
4.2.5.1.11 Arches 4.2-17
4.2.5.2 Substructure Elements 4.2-17
4.2.5.2.1 Cantilever Pier Caps 4.2-18
4.2.5.2.2 Caps on Bents 4.2-18
4.2.5.2.3 Piles 4.2-19
4.2.5.2.4 Bearing Seats 4.2-19
4.2.5.2.5 Arch Supports 4.2-20
4.2.5.2.6 Scour 4.2-20
4.2.5.3 Culverts 4.2-20

4.2.5.3.1 Reinforced Concrete Box Culverts 4.2-21
4.2.5.3.2 Reinforced Concrete Pipe Culverts 4.2-21
4.2.5.3.3 Metal Pipe Culverts 4.2-22
4.2.5.3.4 Masonry Culverts 4.2-22
4.2.6 Analysis of Structures without Plans 4.2-22
4.2.6.1 Steel or Timber Structures without Plans 4.2-22
4.2.6.2 Concrete Structures without Plans 4.2-23

4.3 Design Load Rating 4.3-1

4.3.1 General 4.3-1
4.3.2 Assignment of Responsibility 4.3-2
4.3.2.1 State Bridges 4.3-4
4.3.2.2 Local Agency Bridges 4.3-6
4.3.2.3 Railroad Owned Bridges 4.3-7
4.3.2.4 Border State and Federal Agency Bridges 4.3-7
4.3.2.5 Other Illinois State Agency and Toll Authority Bridges 4.3-8
4.3.3 Method of Analysis 4.3-9
4.3.3.1 Allowable Stress Rating Method 4.3-11
4.3.3.2 Load Factor Rating Method 4.3-11
4.3.3.3 Load and Resistance Factor Rating Method 4.3-11
4.3.4 Design Vehicle / Load Configuration 4.3-12
4.3.5 Existing Structure Modifications 4.3-13
4.3.5.1 Additional Overlay / Wearing Surface 4.3-15
4.3.5.2 Bridge Rehabilitation 4.3-15
4.3.5.3 Structural Damage 4.3-16
4.3.5.4 Structural Deterioration 4.3-16
4.3.5.5 Temporary Measures 4.3-17
4.3.6 Load Rating for Concrete Structures without Plans 4.3-18

4.4 Legal Load Rating 4.4-1

4.4.1 General 4.4-1
4.4.2 Assignment of Responsibility 4.4-2
4.4.2.1 State Bridges 4.4-3
4.4.2.2 Non-State Bridges 4.4-4
4.4.3 Determining Weight Limits 4.4-5
4.4.3.1 Factors Considered 4.4-5
4.4.3.2 Method of Analysis 4.4-6
4.4.3.2.1 Allowable Stress Rating (ASR) Method 4.4-6
4.4.3.2.2 Load Factor Rating (LFR) Method 4.4-7
4.4.3.2.3 Load and Resistance Factor Rating (LRFR) Method 4.4-8
4.4.4 Legal Load Configurations 4.4-9
4.4.5 Allowable Gross Vehicle Weight 4.4-9
4.4.6 Implementing Bridge Weight Restrictions 4.4-12
4.4.6.1 Weight Restrictions Below Legal Loads 4.4-13
4.4.6.2 Bridge Closures 4.4-14
4.4.7 Monitoring Bridge Weight Limits 4.4-16
4.4.8 Removing or Altering Bridge Weight Limits 4.4-16
4.4.9 Posted Weight Limits Information 4.4-16
4.4.10 Excessively Loaded Legal Vehicle Configurations 4.4-17

4.5 Permit Load Rating 4.5-1

4.5.1 General 4.5-1
4.5.2 Assignment of Responsibility 4.5-3
4.5.2.1 State Bridges 4.5-3
4.5.2.2 Non-State Bridges 4.5-4
4.5.3 Permit Vehicle Information 4.5-4
4.5.4 Legal Load Only Bridges 4.5-5
4.5.5 Routine Permits and Truck Routes 4.5-6
4.5.5.1 Routine (Annual) Permits 4.5-6
4.5.5.2 Designated State Truck Route System 4.5-6
4.5.6 Special (Limited Crossing) Permits 4.5-7
4.5.6.1 Evaluation of Bridges for Permit Loads 4.5-9
4.5.6.1.1 Factors Considered 4.5-9
4.5.6.1.2 Method of Analysis 4.5-11
4.5.6.1.2.1 Allowable Stress Rating (ASR) Method 4.5-12
4.5.6.1.2.2 Load Factor Rating (LFR) Method 4.5-12
4.5.6.1.2.3 Load and Resistance Factor Rating (LRFR) Method 4.5-12
4.5.6.2 Special Permit Restrictions 4.5-13
4.5.6.2.1 One Lane Loaded 4.5-13
4.5.6.2.2 Load Position 4.5-13
4.5.6.2.3 Reduced Impact Loading 4.5-14
4.5.6.2.4 Escort and Traffic Control 4.5-14
4.5.6.2.5 Compliance with Posted Weight Limits 4.5-14
4.5.6.3 Temporary Measures 4.5-15

4.6 Construction Load Rating 4.6-1

4.6.1 General 4.6-1
4.6.2 Assignment of Responsibility 4.6-2
4.6.2.1 State Bridges 4.6-2
4.6.2.2 Non-State Bridges 4.6-3
4.6.3 Evaluation of Construction Loads 4.6-4
4.6.3.1 Project Development Stage 4.6-4
4.6.3.2 Construction Stage 4.6-5
4.6.3.3 Factors Considered 4.6-6
4.6.3.4 Method of Analysis 4.6-6
4.6.3.4.1 Allowable Stress Rating (ASR) Method 4.6-7
4.6.3.4.2 Load Factor Rating (LFR) Method 4.6-7
4.6.3.4.3 Load and Resistance Factor Rating (LRFR) Method 4.6-8
4.6.4 Precautionary Measures 4.6-8

4.7 Special Hauling Vehicles 4.7-1

4.7.1 General 4.7-1
4.7.2 Illinois Common Special Hauling Vehicles 4.7-2
4.7.3 AASHTO Notional Load 4.7-3

4.8 Quality Control and Quality Assurance 4.8-1

4.8.1 General 4.8-1
4.8.2 Staff Qualifications 4.8-2
4.8.2.1 Rater 4.8-2
4.8.2.2 Checker 4.8-2

4.8.2.3 Reviewer 4.8-2
4.8.2.4 Engineer of Record 4.8-3
4.8.3 Controlling Member 4.8-3
4.8.4 Rating Documentation 4.8-4

Appendix

Section 4 ***Ratings and Permits*** ***A4***

FHWA Policy Memorandum:"Bridge Load Ratings for the National Bridge Inventory" *A4-1*

Guidelines for Estimating Strand Loss in PPC Deck Beam Bridges *A4-2*

Rating and Posting for Non-analytically Evaluated Bridges *A4-3*

Modeling Bridges with AASTHOWare Bridge Rating (Virtis®) *A4-4*

Section 4 Ratings and Permits

Table of Figures

4.3 ***Design Load Rating*** ***4.3-1***

Figure 4.3.2-1 *Design Load Rating Responsibility Flow Chart* *4.3-5*
Figure 4.3.4-1 *Design Load Configurations* *4.3-14*

4.4 ***Legal Load Rating*** ***4.4-1***

Figure 4.4.2-1 *Legal Load Rating Responsibility Flow Chart* *4.4-4*
Figure 4.4.4-1 *Illinois Posting Vehicles, Single-Unit* *4.4-10*
Figure 4.4.4-2 *Illinois Posting Vehicles, Semi-Trailer* *4.4-11*
Figure 4.4.5-1 *Typical Bridge Posting Signs* *4.4-15*
Figure 4.4.10-1 *Excessively Loaded Legal Vehicle Configurations* *4.4-18*

4.5 ***Permit Load Rating*** ***4.5-1***

Figure 4.5.4.2-1 *Illinois Routine Permit Vehicles* *4.5-8*
Figure 4.5.4.2-2 *Example Special Permit Vehicle - Superload* *4.5-10*

4.7 ***Special Hauling Vehicles*** ***4.7-1***

Figure 4.7.3-1 *AASHTO Notional Rating Load* *4.7-4*

Section 4 Ratings and Permits

4.1 General

4.1.1 Purpose and Scope

This section provides policies, procedures and information related to determining load-carrying capacities for highway structures to ensure public safety and to comply with federal regulations and state statutes. Through the determination and documentation of structure load-carrying capacity, the Illinois Department of Transportation (IDOT) and other agencies are able to readily access data to:

- identify structurally deficient bridges and culverts
- evaluate the movement of overweight commercial vehicles
- evaluate the use and movement of construction equipment
- determine the effect of reported structural damage or deterioration on highway safety
- establish appropriate posted bridge weight limits
- evaluate the feasibility of proposed structural modifications
- prevent structural damage

Information and guidance for determining and reporting load-carrying capacity are provided in various publications, which are readily available from IDOT or from other government agencies. These publications include the following:

- IDOT Structure Information and Procedure Manual
- IDOT Bureau of Local Roads and Streets Manuals
- American Association of State Highway and Transportation Officials (AASHTO) Manual for Bridge Evaluation
- Illinois Compiled Statutes
- Code of Federal Regulations

4.1.2 National Bridge Inspection Standards

The National Bridge Inspection Standards (NBIS), as presented in Title 23 Code of Federal Regulations Part 650.3 (23 CFR 650.313), requires "all bridges located on public roads" and "having an opening measured along the center of roadway of more than 20 feet" to be evaluated "as to its safe load-carrying capacity in accordance with the AASHTO Manual". The NBIS requires a "safe load-carrying capacity" to be determined in accordance with procedures established by specific AASHTO specification, which are presently provided by the AASHTO Manual for Bridge Evaluation with interim revisions. If the effect of the maximum unrestricted legal vehicle loads or state routine permit loads exceeds the maximum safe load-carrying capacity determined through analysis performed in accordance with the AASHTO specifications, the NBIS requires the responsible agency to establish a posted load restriction on the structure. In extreme cases, the load restriction may require the closure of the structure to all traffic.

The NBIS specifies the safe load-carrying capacity of a structure shall be defined by the "operating rating or equivalent rating factor" determined by analysis using AASHTO specifications. The operating rating is defined within the NBIS as: "The maximum permissible live load to which the structure may be subjected for the load configuration used in the rating". The term "rating factor" is not defined within the NBIS, but is a numerical representation of load-carrying capacity derived through analysis using the AASHTO specifications. Information relative to the determination of rating factors is provided in Sections 4.1.9 and 4.2 of this Manual.

All States are required to establish and maintain a database containing inventory and appraisal information for all structures subject to the NBIS requirements. The IDOT database is referred to as the Illinois Structure Information System (ISIS), and the NBIS required information within the ISIS is periodically provided to the Federal Highway Administration (FHWA) for inclusion in the National Bridge Inventory (NBI). Safe load-carrying capacity is an item included among the data provided for each inventoried structure. When structures are affected by modifications, damage or deterioration, agencies are required to reevaluate these structures to verify or adjust the safe load-carrying capacity data included in the ISIS and NBI databases.

4.1.3 Illinois Vehicle Code

Section 15-317 of the Illinois Vehicle Code provides authority to the Department of Transportation to "*conduct an investigation of any bridge or other elevated structure constituting a part of a highway, and if the department finds that such structure cannot with safety to itself withstand the weight of vehicles otherwise permitted by this Chapter the Department shall determine and declare the maximum weight of vehicles which such structure can withstand, and shall cause or permit suitable signs stating maximum weight to be erected and maintained before each end of the structure*". The Illinois Vehicle Code is a portion of the Illinois Compiled Statutes (ILCS) and is indexed as 625 ILCS 5.

The authority to determine safe load-carrying capacity and load restriction requirements for highway structures is granted solely to IDOT for specific highway systems without regard to highway jurisdiction. For structures under the jurisdiction of IDOT, all inspections, analyses and load restriction recommendations are performed or overseen by IDOT personnel. For structures under the jurisdiction of Local Agencies, the services of a consulting engineer may be used for determining safe load carrying capacity and load restriction requirements. However, all Consultant recommendations must be submitted by the Local Agency to IDOT for review and concurrence by the Bureau of Bridges and Structures. Information relative to the assignment of responsibilities for determining and establishing vehicle weight restrictions is presented in Section 4.4 of this Manual.

Section 15-301 gives the authority to grant permits for the movement of overweight vehicles to the agency with jurisdiction over the highways and bridges upon which the vehicles will travel. The evaluation and issuance of permits for overweight vehicles is presented in Section 4.5 of this Manual.

4.1.4 Structural Engineering Act

It is the policy of IDOT that the person in charge of the organizational unit responsible for the load rating inspection, load rating analysis and load restriction recommendations for highway structures be licensed as a Structural Engineer in the State of Illinois in

accordance with the Structural Engineering Practice Act of 1989. This Act is presented in Section 225 ILCS 340 of the ILCS regarding the regulation of professions and occupations. Computations and recommendations provided by a consulting engineer and submitted to IDOT for acceptance and concurrence must be accompanied by the Structure Load Rating Summary (Form BBS 2795), included on the Bureau of Bridges and Structures website, signed and sealed by an Illinois Licensed Structural Engineer.

4.1.5 Small Bridge Inspection Program

While the NBIS requirement for determining safe load-carrying capacity is only applicable to structures having a total clear span in excess of 20 feet, there is no similarly relative span limit provided by the ILCS. To ensure overall highway safety, IDOT has developed the Small Bridge Inspection Program (SBIP). Under the provisions of the SBIP, a safe load-carrying capacity is determined for all structures under the jurisdiction of IDOT having a clear span length of 6 feet or greater. Although agencies other than IDOT are not required to implement the SBIP for structures under their jurisdiction, all agencies are encouraged to take measures to assess the load-carry capacity of smaller structures not covered by the NBIS requirements. The provisions of the SBIP are described in Section 3.11 of this Manual.

4.1.6 Federal Bridge Formula

The Bridge Formula was enacted by Congress in 1975 as a means for establishing the gross weight and axle configuration for heavy vehicles using interstate highways. The formula provides a method for ensuring the gross weight of a vehicle is not overly concentrated and is spread over an appropriate number of axles adequately spaced. Vehicles complying with the formula will not impose load effects that will cause appreciable damage to highway structures otherwise capable of carrying routine highway traffic without restrictions. Compliance with the Bridge Formula is determined by using the following equations:

$$W = 500 \; [(L N / (N-1)) + 12 N + 36]$$

Where:

W = the overall gross weight on any group of two or more consecutive axles to the nearest 500 pounds.

L = the distance in feet between the outer axles of any group of two or more consecutive axles.

N = the number of axles in the group under consideration.

Information relative to the use of the Bridge Formula can be found on the FHWA website at: http://ops.fhwa.dot.gov/freight/publications/brdg_frm_wghts/bridge_formula_all.pdf

4.1.7 Overweight Vehicle Permits

Chapter 15 of the Illinois Vehicle Code provides defines the size and weight limits for vehicles allowed to travel without restriction on roadways in Illinois, and vehicles exceeding these limits are considered to be an oversize or overweight vehicle. It also provides information concerning issuance of permits by jurisdictional agencies to allow oversize or overweight vehicles access to Illinois roadways.

Some States require all overweight vehicles to have axle loads and axle spacings compliant with the federal Bridge Formula, and this is one method an agency can utilize in the permit evaluation process to ensure overweight vehicles will not damage highway structures. If the federal Bridge Formula is not used, an analysis must be performed to evaluate the load effect of the specific overweight vehicle configuration, and a permit can be granted or denied by the jurisdictional agency based on the results of the evaluation.

IDOT does not require overweight vehicles to comply with the federal Bridge Formula when utilizing structures under its jurisdiction. The operator of an overweight vehicle must submit a request for access to a designated route to the IDOT Bureau of Operations, which is responsible for issuing permits for overweight vehicles utilizing

roadways under IDOT jurisdiction. Upon receipt of the overweight vehicle permit request, the Bureau of Operations coordinates with the Bureau of Bridges & Structures (BBS) to obtain a structural analysis of the structures located on the designated vehicle route. The analysis by the BBS evaluates the load effect of the specifically configured overweight vehicle described in the permit request submitted by the vehicle operator and, based on the results of the analysis, the Bureau of Operations grants or denies an overweight vehicle permit request.

Agencies other than IDOT are responsible for establishing procedures for evaluating overweight vehicle use of roadways and structures under their jurisdiction. Permits issued by IDOT for overweight vehicle travel do not extend beyond the highway system directly under IDOT jurisdiction. Operators of overweight vehicles are required to contact all agencies having jurisdictional authority over the roadways located on their intended route.

4.1.8 Weight Limit Posting

Both the NBIS and the ILCS require that weight limits be placed on structures when they can no longer safely carry maximum weight legal load traffic. The ILCS requires that all posted weight limits be determined or concurred with by IDOT. In order to successfully prosecute violations of a posted weight limit, jurisdictional agencies must have documentation on file showing IDOT has determined or concurred with the need to post a weight limit, and the posted weight limit must be as stated in the documentation received from IDOT. Also, all weight limit postings must comply with the Manual on Uniform Traffic Control Devices, (MUTCD) published by the FHWA, and with the Illinois Supplement to the Federal MUTCD. The process for implementing a posted weight limit should include notification of affected agencies, such as those providing emergency Services or establishing routes for school buses.

After weight limits have been legally posted to alert traffic of the restriction, no vehicle exceeding the posted weight limit can legally utilize the structure, and the jurisdictional agency may not grant a permit allowing use of the structure by overweight vehicles. Routine monitoring of the erected posting signs is necessary to ensure that vehicles

weighing in excess of the posted limit are provided adequate advanced notice of the restriction and can use alternate routes.

4.1.9 Rating Factors

The AASHTO load rating specifications establish procedures for determining a "Rating Factor" that provides a numerical value indicative of the maximum permissible load carrying capacity of a structure. The NBIS mandates that structures have posted weight limits or be closed, when the load effect of legal routine vehicles allowed by state statues exceeds the maximum permissible load allowed by the AASHTO load rating specifications. Also, an overweight permit cannot be granted for a vehicle having a load effect in excess of the maximum permissible load-carrying capacity determined by analysis utilizing the AASHTO load rating specifications. Additional information regarding Rating Factor determination in provided in Section 4.2 of this Manual.

4.1.10 Highway Systems

Structures carrying public traffic are under the immediate ownership and jurisdiction of a variety of agencies. Among the jurisdictional agencies are:

- Federal Agencies
- Other States
- IDOT
- Other Illinois State Agencies
- Toll Authorities
- Counties
- Townships & Road Districts
- Municipalities
- Park Districts
- Railroads
- Private Entities

IDOT and the agency having immediate structure jurisdiction interact to varying degrees to comply with federal regulations and state statutes for addressing highway structure safety.

4.1.10.1 *Article 2 Highway System*

Illinois statutes assign oversight responsibilities and grant authority to IDOT for structures serving the "Systems of Highways" defined in Article 2 of Chapter 605 (Roads and Bridges) of the ILCS and described in Chapter 3 of the IDOT Bureau of Local Roads and Streets Manual. This "Systems of Highways" shall be referred to as the "Article 2 Highway System" within this Manual and includes the:

- State Highway System (includes federal aid highways)
- County Highway System
- Township and District Road System
- Municipal Street System (includes park roads)

For structures owned by a county, township, road district, municipality or park district and serving the Article 2 Highway System, IDOT must perform, or concur with, ratings related to determining load-carrying capacities for the purpose of providing information for the ISIS and submittal to the NBI or determining posted weight limits. When specialized resources are needed, such as traffic control, equipment for accessing structure elements, etc., the agency should retain the services of a qualified consultant.

Railroad Companies often own bridges that serve as grade separations carrying Article 2 Highway System traffic over a railway. In these cases, the Railroad Company is responsible for evaluating the load-carrying capacity of the structure in accordance with AASHTO load rating specifications. Since the structure serves the Article 2 Highway System, the Railroad Company must submit the load rating information, including any recommendations for posted vehicle weight limits, to IDOT for acceptance and concurrence. However, if conditions are observed that may affect the load-carrying capacity of a railroad owned bridge, IDOT may, at its own discretion, perform an evaluation to determine safe load-carrying capacity.

Bridges serving the Article 2 Highway System are often owned by other government agencies, such as:

- Other States (Indiana, Iowa, Kentucky, Missouri)
- Federal Agencies (U. S. Army Corps of Engineers)

The responsibility for the performance of ratings to determine load-carrying capacity for these structures rests with the jurisdictional agency. Information is provided to IDOT by the jurisdictional agency for inclusion in the ISIS and submittal to the NBI.

4.1.10.2 Other Highway Systems

Within the State of Illinois, there are structures serving roadways not part of the Article 2 Highway System. These structures carry traffic on systems under the jurisdiction of:

- Federal Agencies (National Park Service)
- State Agencies (other than IDOT, Illinois Dept. of Natural Resources)
- Illinois State Toll Highway Authority (ISTHA)

The performance of a rating to determine load-carrying capacity is the responsibility of the jurisdictional agency for these structures not serving the Article 2 Highway System. Concurrence by IDOT with the load-carrying capacity determination is not required. However, the jurisdictional agency is required to submit the load-carrying capacity rating information to IDOT for inclusion in the ISIS database and submittal to the NBI.

4.2 Structure Analysis

4.2.1 Method of Analysis

The design and rating specifications used by the Illinois Department of Transportation (IDOT) for structural design have varied over time with the accumulation of engineering knowledge and the development of analytic capabilities. Specifications provided by the American Association of State Highway and Transportation Officials (AASHTO) have provided the basis for bridge design and rating in Illinois.

The guidance provided by the AASHTO rating specifications allows agencies to evaluate structures for various load configurations, such as:

- Design Vehicles/Loads used for initial structure design.
- Legal Vehicles configured in accordance with the state statutes for weight and wheelbase limitations.
- Routine Permit Vehicles, which do not meet state statutes for Legal Vehicle configuration, allowed to operate in an unrestricted manner on a designated highway network under the provisions of a long-term permit issued by the jurisdictional agency.
- Permit Vehicles, which do not meet state statutes for Legal Vehicle configuration, allowed to operate in a restricted manner on a designated route under the provisions of a single-trip permit issued by the jurisdictional agency.

The results of the evaluation are expressed as a Rating Factor representative of the structure's capacity to carry the specific vehicle/load configuration used in the evaluation. When the evaluated load is a vehicle with a specifically defined weight and axle configuration, without accompanying tributary loads, the Rating Factor may be converted to a weight limitation for the specific vehicle configuration used in the evaluation.

4.2.1.1 Rating Specifications

Specifications used for determining a structure's safe load-carrying capacity are provided by the AASHTO in "The Manual for Bridge Evaluation". Within the AASHTO Manual, specifications for the following rating methods are provided:

- Allowable Stress Rating (ASR)
- Load Factor Rating (LFR)
- Load and Resistance Factor Rating (LRFR)

The above rating methods are reflective of the various design philosophies utilized over the years to design the majority of the structures presently serving roadways within Illinois and other States. Regardless of which rating method is used, the results of the evaluation can be expressed in terms of a Rating Factor indicative of the structures ability to carry the specific vehicle used in the analysis.

In Illinois, Allowable Stress Design (ASD) specifications were used for the design of highway structures until the mid 1970's, and the ASR method was derived from the ASD philosophy to assist agencies in determining safe load-carrying capacity. Load Factor Design (LFD) specifications, from which the LFR method is derived, replaced the ASD specifications as Illinois' primary method of design. Subsequent to the adoption of LFD specifications as the primary design specification, the Federal Highway Administration (FHWA) selected the LFR method as the standard for computing bridge safe load-carrying capacity values for inclusion in the National Bridge Inventory (NBI). LFD remained the primary design method until IDOT adopted the Load and Resistance Factor Design (LRFD) specification for the design of new structures beginning in 2007. Although the LRFR method, which is a derivative of LRFD, is suitable for evaluating the majority of Illinois' highway structures, it is currently being utilized primarily to rate new and reconstructed bridges designed with the LRFD specifications. Eventually, the majority of State owned highway bridges and culverts will be evaluated using the LRFR method to determine safe load-carrying capacity.

4.2.1.2 Rating Factors

A Rating Factor provides a numerical representation of a structure's capacity to carry a specific vehicle/load having a defined weight distribution and dimensional configuration. Essentially, a Rating Factor is the ratio of a structure's capacity to carry a specific transient live load to the load effect caused by the passage of the specific transient live load across the structure. For each specific vehicle/load, a Rating Factor can be determined for a structure at various levels of allowable stress or at various levels of reliability. The process for determining a Rating Factor is as follows:

1. Determine the total safe load-carrying capacity of the main load-carrying elements of the structure in accordance with the rating specification being used.
2. Determine the load effect of all permanent loads on the main load-carrying elements of the structure in accordance with the rating specification being used. Permanent loads include the dead load of the superstructure, attachments to the superstructure, wearing surface, utilities and all stationary loads present as vehicles pass across the structure.
3. Determine the load effect of the vehicle on the main load-carrying elements of the structure in accordance with the rating specification being used. The load effect for the vehicle should include a dynamic load allowance (impact) consistent with the anticipated speed of the transient vehicle.
4. Determine the load-carrying capacity available to carry the load effect of the vehicle in each main load-carrying member by subtracting the load effect of the permanent loads from the element's total load-carrying capacity.
5. Determine the Rating Factor for the specific vehicle by dividing the load-carrying capacity available to carry the load effect of the vehicle by the load effect of the vehicle.

The Rating Factor (RF) is determined by:

$$RF = \frac{C - DL}{LL}$$

Where:

C = Capacity of the main load-carrying element

DL = Load Effect of all permanent non-transient loads

LL = Load Effect of the transient vehicle with appropriate impact

A Rating Factor equal to or greater than 1.0 indicates the evaluated main load-carrying member has sufficient load-carrying capacity to accommodate the passage of the specific vehicle used for the analysis. A Rating Factor less than 1.0 indicates the evaluated main load-carrying member is deficient in load-carrying capacity relative to the passage of the specified vehicle. It should be remembered that the Rating Factor determined for a main load-carrying element using a specific vehicle will vary with the rating specification used (ASR, LFR or LRFR).

A Rating Factor can be used to designate a gross weight limitation for the specific vehicle configuration used in an evaluation. The gross weight limitation is determined by multiplying the gross weight of the specific vehicle used in the evaluation by the Rating Factor. For example, if a vehicle with a gross weight of 40 tons is analyzed, and the analysis provides a Rating Factor of 0.81, the gross weight limitation would be 32.4 tons for the specific vehicle configuration used in the evaluation.

4.2.2 Analysis Software

Various bridge structural analysis software has been used to analyze the load capacity of bridges since the early 1970's. Most IDOT maintained bridges were originally load rated utilizing the AASHTO Bridge Analysis and Rating System (BARS). This provided the capability to perform batch analysis of large numbers of bridges on a proposed overweight permit route. BARS, originally developed for mainframe computer use, was modified for use on personal computers into a program called PC-BARS.

In 2009, Bentley Load Analysis and Rating System (LARS) along with Bentley Route Runner replaced BARS as the software used for permit analysis. Many bridges, too complex for BARS or PC-BARS and subsequently LARS, have been entered and analyzed utilizing the more comprehensive McAuto/GT Structural Design Language (STRUDL) initially and later, Bentley Structural Analysis and Design (STAAD).

Beginning in 2001, the Department initiated an effort to create bridge models containing the structural information for all IDOT maintained bridges in the AASHTOWare Virtis database. This database is intended to form the basis for bridge load rating analysis utilizing compatible structural analysis software.

4.2.2.1 AASHTOWare Bridge Rating (Virtis)

Virtis is a database containing structural information being utilized for performing highway bridge load ratings on IDOT maintained bridges. Other bridge inventory and location information can also be entered. It has been designed in a generic format to be able to supply the information required by a wide variety of third-party structural analysis software, also referred to as an "engine". Initial development of Virtis utilized the Wyoming BRASS bridge rating software as the analysis engine. More recently, the AASHTO analysis engine has been developed and is included with the Virtis licensing, which is currently being used by IDOT as the standard analysis engine under Virtis.

Virtis allows for modeling of structural systems including multi-girders, girder/truss-floorbeam-stringer systems plus their deck slabs. The coding of information allows for the eventual possibility of doing 2-D and 3-D analyses utilizing grid or finite element analyses. Guidance for modeling bridges with Virtis to perform load ratings is provided in the Appendix of this Manual.

4.2.2.2 Bentley - Load Analysis and Rating System (LARS)

LARS is the primary software used by the Department for structural analysis of overweight permit loads on bridges. It was originally developed by modification of AASHTO PC-BARS code. LARS bridge model files can be created within LARS, imported from AASHTOWare Virtis or imported from PC-BARS. It will eventually be configured to work from within Virtis as an integrated analysis engine. The bridge model data can be modified using either a text editor or the LARS graphical interface. The LARS bridge models are utilized by Bentley Route Runner for permit load analysis of bridges on selected highway routes.

4.2.2.3 Bentley – Structure Analysis and Design (STAAD)

Some structure types beyond the capability of Virtis and associated analysis engines will continue to be modeled utilizing STAAD. STAAD has the capability of modeling virtually any structural system and performing finite element analysis. This application would typically be applied to structural types such as arches, suspension bridges and rigid-frames.

4.2.3 Structure Information

In order to perform a structure analysis, accurate information must be obtained to determine the condition and properties of the main load-carrying members. Also, information must be obtained to quantify the permanent non-transient loads being carried by the structure. The following sources of information are commonly used to obtain information:

- Original design plans and specifications
- Rehabilitation plans and specifications
- As-Built plans showing field changes made during construction
- Shop drawings for structural steel elements and precast concrete members
- Construction records
- Past and recent inspection reports

After locating structure plans, records and reports, a field inspection is required to establish the present condition of the structural elements. Photographs and sketches of structural damage and deterioration are essential for providing engineering staff with the information necessary for determining the present load-carrying capacity of affected structural elements. Section 1.3 of this Manual provides guidance for documenting field observations.

During field inspections, it is not uncommon to find structure properties and loading differing from those shown in plans. Particular attention should be given to:

- Indentifying the type and thickness of any overlay or wearing surface placed on the bridge deck.

- Locating and documenting repairs made to main load-carrying members for which repair plans and records do not exist.
- Identifying undocumented permanent loads that have been added to the structure (utilities, sign supports, bridge rails, concrete parapets. etc.)

Although design and construction documentation is routinely available for State owned structures, plans and records are often very difficult to locate or do not exist for older structures serving Local Agency roads and streets. For these older undocumented structures, load-carrying capacity evaluations are entirely dependent on the collection of information during field inspections. Information must be collected to describe the main load-carrying members, the overall geometry of the structure and damage or deterioration of main load-carrying members, such as:

<u>MAIN LOAD-CARRYING MEMBERS</u>

- STEEL STRINGERS, BEAMS OR GIRDERS
    - Number and spacing of stringers/beams/girders
    - Splice locations and splice details
    - Bracing locations (diaphragms or cross frames)
    - Compression flange restraints
    - Flange width and thickness
    - Wed depth and thickness
    - End support details
- STEEL FLOOR BEAMS
    - Flange width and thickness
    - Wed depth and thickness
    - Compression flange restraints
    - End support details
- TIMBER STRINGERS OR BEAMS
    - Number and spacing of stringers/beams
    - Splice locations and splice details
    - Bracing locations (diaphragms or cross frames)

  - Compression zone restraints
  - Member depth and thickness
- TIMBER FLOOR BEAMS
  - Member depth and thickness
  - Compression zone restraints
  - End support details
- TRUSS MEMBERS
  - Bracing points for compression members
  - Dimensions of all elements used in the fabrication of the:
    - Chords
    - End Posts
    - Verticals
    - Diagonals
    - Counters
    - Gusset Plates
    - Pin Connections
- PILE BENT ABUTMENTS AND PIERS
  - Material type and dimensions of caps
  - Material type and dimensions of piles
  - Number and spacing of piles
  - Material type and dimensions of abutment backing

<u>OVERALL STRUCTURE GEOMETRY</u>

- Span length
- Spacing of main load-carrying members
- Deck width, type and thickness
- Runner locations, type, width and thickness
- Overlay or wearing surface type and thickness
- Truss configuration
  - Panel spacing
  - Distance between upper and lower chords

- End post configuration
- Bracing and struts between upper chords

MAIN LOAD-CARRYING MEMBER DAMAGE OR DETERIORATION

- Photographs and sketches showing the locations of member damage from vehicle impact or channel debris
- Photographs and sketches showing the locations of member deterioration due to exposure to the elements and deicing agents
- Information quantifying the extent of member damage/deterioration and accompanying section loss affecting member load-carrying capacity

4.2.4 Material Strength

The strength of the materials utilized in the construction of a bridge or culvert greatly affects its ability to carry load. In order to properly load rate a structure, it is necessary to know the properties of the materials originally used in its construction. It is safe to assume the original material properties of structural steel or iron have not changed from those originally provided. However, the strength of some materials, such as concrete or timber, may have been adversely affected by exposure to traffic and the elements, and a strength reduction may be required based on field inspection data or laboratory testing of the existing material. Material tests could justify using higher strengths than originally assumed.

The AASHTO specifications for bridge rating provide suggested material strengths based on year of construction. IDOT has further refined the material strength information to reflect the historic use of materials in Illinois bridge construction. Unless records are available to indicate otherwise, the following material strength should be used to rate structures within the State of Illinois:

STRUCTURAL STEEL	
Year of Construction	Minimum Yield Point or Minimum Strength f_y (psi)
Before 1905	26,000
1905 - 1929	30,000
1930 - 1961	33,000
After 1961	36,000

REINFORCING STEEL	
Year of Construction	Minimum Yield Strength f_y (psi)
Before 1905	26,000
1905 - 1920	32,000
1921 - 1944	33,000
1945 - 1979	40,000
After 1979	60,000

PRESTRESSING STRANDS	
Year of Construction	Tensile Strength f_{pu} (psi)
Before 1963	232,000
1963 - 1976	248,000
After 1976	270,000

CONCRETE		
	Year of Construction	Compressive Strength f'c (psi)
Cast in Place Concrete	Before 1930	3,000
	1930 to date	3,500
Precast Concrete	All Years	4,500
Precast Prestressed Concrete	All Years	5,000

TIMBER			
	Member Type	Allowable Inventory Stresses (psi)	
Members subject to bending and shear	Stringer, Floor Beam, Pile Cap	Bending F_b = 1150	Shear F_v = 155
Members subject to axial loading	Truss Member	Compression F_c = See Note Below	Tension F_t = See Note Below
Members subject to axial compression and bending	Piling	Compression F_c = 1100	Bending F_b = 2400

Truss member elements are very dependent on member sizes. Stresses shall be the lesser of the Select Structural values found int the NDS for Douglas Fir-Larch, Red Oak or Southern Pine.

4.2.5 Structure Elements Analyzed

A structure rating addresses the safe load-carrying capacity of the main load-carrying members by analyzing these members for axial load, bending moment and shear in accordance with the AASHTO specifications. Bridge elements such as diaphragms, cross frames, bearings, concrete abutment walls, pier walls and substructure footings are typically not analyzed, unless they exhibit signs of distress or the engineer judges they may control the rating. The analysis must always consider damage and deterioration affecting the condition of the main load-carrying member.

4.2.5.1 Superstructure Elements

The superstructure of a bridge is composed of all of the main structural and secondary elements located above the top surface of the abutments, piers and other supporting members and walls.

4.2.5.1.1 Decks

Concrete decks and metal decks supported by the main load-carrying members of a superstructure and found to be functioning satisfactorily under traffic do not need to be load rated. However, when concrete and metal decks exhibit severe deterioration, an evaluation must be performed to consider the need for the implementation of temporary measures, such as shielding to prevent dislodged concrete from falling on areas under

the bridge and/or the placement of a weight limit on the structure until the deck can be repaired.

Timber plank decks, which are often found on rural Local Agency structures, are analyzed to determine load-carrying capacity. It is not unusual for timber plank decks to control a structure rating, especially when the planks are deteriorated and runners are not employed to distribute vehicular wheel loads to multiple planks.

4.2.5.1.2 Reinforced Concrete Slabs

A reinforced concrete (RC) slab bridge has a superstructure composed of a cast-in-place concrete slab strengthened through the use of steel or iron reinforcement bars and has only one main load-carrying member, which is the RC slab itself. In order to perform an analytical rating, existing design plans or as-built plans must be located to establish the size and spacing of reinforcement bars incorporated in slab. If existing plans are not available, a non-analytical rating based on the condition of the structure is acceptable as described in Section 4.2.6 for "Analysis of Structures Without Plans".

4.2.5.1.3 Concrete Stringers, Beams and Girders

Bridges utilizing reinforced concrete stringers, beams and girder are common in Illinois and are typically incorporated in the following types of structures:

- Concrete Deck-Girder Bridges
- Concrete Tee-Beam Bridges
- Concrete Thru-Girder Bridges

All stringer, beams and girders incorporated in the superstructure must be evaluated. In order to perform an analytical rating, existing design plans or as-built plans must be located to establish the size and number of reinforcement bars incorporated in each member. If existing plans are not available, a non-analytical rating based on the condition of the structure is acceptable as described in Section 4.2.6 for "Analysis of Structures without Plans".

4.2.5.1.4 Steel Stringer, Beams and Girders

Steel stringers, beams and girders are commonly incorporated in construction of the following types of structures:

- Steel Multi-Beam/Girder Bridges
- Steel Deck-Girder Bridges
- Steel Thru-Girder Bridges
- Steel Box-Beam Bridges
- Steel Rigid-Frame Bridges

All stringers, beams and girders incorporated in the superstructure should be considered main load-carrying members and must be evaluated. When plans are not available, field measurements of the main load-carrying members and structure geometry must be obtained. When beams or girders are utilized in a non-redundant manner, the element should be consider as a “Fracture Critical Member”, and special attention should be given to these members, especially when damage or deterioration is present.

4.2.5.1.5 Floor Beams

Floor beams are always considered main load-carrying members. They are commonly incorporated in the construction of:

- Concrete or Steel Deck-Girder Bridges
- Steel or Timber Truss Bridges

Floor beams provide direct support for decking elements or stringers. When evaluating a floor beam, the connection of the floor beam to the girder or truss must also be evaluated. A floor beam is considered to be a “Fracture Critical Member” if it directly supports stringers or when it directly supports a deck and is spaced 15 feet or more from an adjacent floor beam. As “Fracture Critical Members”, special attention should be given to floor beams, especially when damage or deterioration is present.

4.2.5.1.6 Trusses

Unless review of truss geometry has identified a specific truss element as a non-load-carrying member, all elements of a truss should be considered main load-carrying members, and those elements are typically the:

- Top & Bottom Chords
- End Posts
- Verticals
- Diagonals
- Counters
- Gusset Plates
- Pin Connections & Link Plates

Steel truss elements placed in tension by load effects are considered "Fracture Critical Members". Special attention should be given to these members, particularly when damage or deterioration is present on the member. Gusset plate analysis is to be governed by applicable All Bridge Designers (ABD) Memorandums and provisions in The Manual for Bridge Evaluation (MBE). They are analyzed using the procedures provided by the FHWA in Publication No.FHWA-IF-09-014, "Load Rating Guidance and Examples for Bolted and Riveted Gusset Plates in Truss Bridges".

4.2.5.1.7 Cables and Hangers

Cables and hangers are structural elements typically found in suspension bridges and tied arch bridges. They are in tension and must be considered "Fracture Critical Members" unless designed to provide load path redundancy. Anchorages and end connections should be considered when determining safe load-carrying capacity.

4.2.5.1.8 Pin and Link Connections

The safe load-carrying capacity of a pin and link connection is critical for ensuring support for a suspended span. Pins and link plates must be evaluated to establish their load-carrying capacity, and analysis must consider the present condition of the pin and link plates.

4.2.5.1.9 Precast Concrete Beams

Precast concrete beams used within the State of Illinois are commonly called "Channel Beams" and are typically referred to as "Precast Concrete Bridge Slabs" in design plans. Prestressing of tension reinforcement is not utilized in the manufacturing process for precast concrete beams. The beams are analyzed as typical reinforced concrete members for moment and shear capacity. When evaluating precast concrete beams, the adequacy and present condition of the end anchorage of the main tension reinforcement bars must be considered, along with the adequacy of bonding of the tension reinforcement bars within the legs of the precast concrete beams.

4.2.5.1.10 Precast Prestressed Concrete Beams

Precast prestressed concrete beams utilized a "prestress" force applied to the tension reinforcement during the manufacturing process. The applied "prestress" force causes the strands (tension reinforcement) to be highly stressed and prone to rapid deterioration when exposed to the elements or a corrosion environment. IDOT sponsored research by the University of Illinois at Urbana-Champaign (UIUC) to provide the basis for developing policy for rating precast prestressed concrete beams. Based on the research findings, if strands used for prestressing steel are fully exposed to the elements or, although not exposed, strands are thought to be corroding, the affected strands are to be considered ineffective for carrying load.

Precast Prestressed Concrete (PPC) Deck Beams are especially prone to deterioration and prestressing strand loss, and the UIUC research specifically tested and observed PPC Deck Beams for the development of their report. A major finding of the research is that the strands used for prestressing steel in Deck Beams corrode at an accelerated rate even when not directly exposed to the elements. Once the conventional reinforcement bars in the beams, such as the "stirrup" shear reinforcement bars or wire mesh, are exposed and subject to active corrosion, all prestressed strands in the vicinity of the corroding reinforcement bars are affected and corroding at a rate beyond that of the conventional reinforcement bars or wire mesh. The research also directed attention to areas on a beam's surface exhibiting discoloration that may indicate the presence of active corrosion, even though reinforcement bars have not been exposed. <u>The research</u>

concluded that once corrosion has initiated within a prestressing strand, the rate of corrosion is sufficient to consider the strand as having lost its ability to carry load. Based on the research findings, the Bureau of Bridges and Structures (BBS) has developed guidelines for personnel performing the structural analysis to determine the safe load carrying capacity of PPC Deck Beam bridges. "Guidelines for Estimating Strand Loss in PPC Deck Beam Bridges" are provided in the Appendix of this Manual.

In addition to being used by engineering staff performing the structural analysis required for determining safe load-carrying capacity, the "Guidelines for Estimating Strand Loss in PPC Deck Beam Bridges" provides a reference for field inspection personnel when they are performing inspections that provide the information needed for the structural analysis. Also, providing the guidelines for estimating strand loss to personnel performing Routine NBIS Inspections illustrates to the inspectors the importance of closely inspecting PPC Deck Beams and the need to remove unsound concrete to accurately determine beam condition ratings. It is the condition ratings assigned by field inspection personnel during Routine NBIS Inspections that alert the BBS to the need for a Load Rating Inspection.

The UIUC research reports (TES-118 and TES-124) also noted a major factor affecting the performance of PPC Deck Beams is the degree to which the bridge is exposed to deicing agents. Since deicing agents are applied to a lesser degree on the local highway system, most bridges of this type under the jurisdiction of Local Agencies are performing adequately and have not experienced deterioration to the same degree as on the state highway system. However, there are structures on local highways carrying relatively high volumes of traffic and routinely exposed to deicing agents. Local agencies should be especially thorough in their inspection of PPC Deck Beams exposed to deicing agents and should look closely at area of concrete discoloration and delamination.

For both PPC deck-beam and precast concrete channel beam bridges, the grouted shear-keys are integral to the design. When sufficiently degraded, these elements lose the ability to spread wheel loads from one beam to another, reducing the load capacity of the bridge. The indication that the wheel distribution function has been adversely affected is when differential deflection between adjacent beams can be detected visually

or by feel. The presence of leakage, while an indication of potential or future shear key failure, is not by itself cause to use a wheel load distribution other than specified by IDOT design policy.

4.2.5.1.11 Arches

Arches may utilize various types of material and construction, such as:

- Metal or timber trusses
- Metal or timber frames
- Corrugated metal pipes
- Interconnected structural steel plates
- Cast-in-place reinforced concrete
- Precast concrete units
- Stone masonry

In all cases, the elements of the arch must be evaluated for determining the safe load-carrying capacity of the structure.

Although the IDOT structure identification policies, as presented in the Structure Information and Procedure (SIP) Manual, do not classify bridges utilizing arched superstructures as culverts, the FHWA Culvert Inspection Manual (Report No. FHWA-IP-86-2) provides information relating the observed field conditions of arches to structural deficiencies. This information can be useful for identifying conditions indicative of reduced load-carrying capacity. When original design plans or as-built plans are not available, the safe load-carrying capacity of a masonry or concrete arch may be determined as described in Section 4.2.6 for “Analysis of Structures without Plans”.

4.2.5.2 Substructure Elements

Although substructure units are not typically evaluated in determining the safe load-carrying capacity of a bridge, this does not mean the elements of the substructure units should be disregarded during the evaluation process. The condition and configuration of the substructure units should be observed to determine the extent to which substructure evaluation is required.

There are exceptions to the typical exclusion of substructures from safe load-carrying capacity evaluation. Among these are abutments or piers utilizing the following structural elements

- Timber caps providing direct support for the superstructure and acting as a beam supported by piles.
- Exposed timber piles utilized in pile bent piers or closed timber-backed abutments.
- Steel cross-beams providing direct support for the superstructure and acting as a floor beam supported by piles or columns located at the ends of the cross-beam.

Exposed timber piles are especially susceptible to decay and should be evaluated for load capacity when this has occurred. In addition, when timber piles have decayed to the point of failure or near failure the pile cap should be load rated. A substructure steel cross-beam is essentially the same type of member as a floor beam and is analyzed in the same manner. It may also be a fracture critical member.

4.2.5.2.1 Cantilever Pier Caps

Cantilever pier caps are commonly constructed of reinforced concrete. The concrete member should be evaluated, if the following conditions are observed:

- Exposed tension reinforcement bars
- Flexure cracks (width > 0.012”)
- Exposed shear reinforcement bars
- Diagonal shear cracks (width > 0.012”)

4.2.5.2.2 Caps on Bents

Pile bent caps are most commonly constructed of timber or reinforced concrete, although steel bent caps are occasionally encountered. Bent caps should be included in safe load-carrying capacity evaluations, and the substructure must be inspected to determine if the following types of deterioration are present:

- Pile deterioration affecting the adequacy of cap support locations
- Deteriorated areas of timber caps (identified by sounding or coring)

- Deteriorated areas of concrete cap with exposed reinforcement bars or load related cracking
- Deteriorated areas of steel cap with significant section loss

4.2.5.2.3 Piles

Piles supporting bent caps are typically exposed and readily available for close inspection. Piles supporting substructure footings are not available for inspection, unless they have been exposed by environmental actions. The most common pile types utilized are timber, concrete, metal shell and steel H-piles. It must be noted that the deterioration of timber piles is one of the major factors contributing to the need for posted weight restrictions on Local Agency bridges. Severe and extensive deterioration of timber piles has also contributed to the closure of many Local Agency bridges and has occasionally been the primary cause of a bridge failure. Close inspection of exposed timber piles using sounding hammers and coring tools is necessary to determine pile condition. Piles should be evaluated, if the following conditions are observed:

- Deterioration due to decay or damage
- Exposure of piles under footings

4.2.5.2.4 Bearing Seats

The condition of substructure units adjacent to the bearings supporting a superstructure can have an adverse affect on the safe load-carrying capacity of a bridge. If bearing support is reduced due to loss of concrete, timber deterioration or steel section loss, the assigned safe load-carrying capacity must reflect these conditions.

4.2.5.2.5 Arch Supports

The ability of substructure elements to carry the vertical reaction and horizontal thrust of arched superstructures must be considered when determining safe load-carrying capacity. When visual inspection finds supports to be functioning adequately with no apparent structural deficiencies, in-depth analysis of the foundation units is not required. Substructure units exhibiting deterioration potentially affecting load-carrying capacity must be analyzed.

4.2.5.2.6 Scour

Scour and other flood related events are the leading cause of bridge failures. If inspections indentify the occurrence of scour, the effect of the scour must be included in the determination of safe load-carrying capacity. Scour can undermine existing substructure footings, thereby affecting overall structure stability, and it can expose the upper portions of driven piles, thereby reducing the load-carrying capacity of the piles.

4.2.5.3 Culverts

Culverts are considered as a whole, and the structural elements of a culvert are not categorized as being distinct superstructure or substructure elements. The evaluation of a culvert for determining safe load-carrying capacity must consider the strength and condition of the various structural elements utilized in the construction or manufacture of the culvert. Wingwalls associated with culvert construction are not analyzed in determining load-carrying capacity. However, when the wingwalls are located adjacent to traffic lanes to the extent they provide critical support for roadway geometry, the strength and condition of wingwalls should be considered for determining the need for traffic diversions or lane closures.

The FHWA Culvert Inspection Manual (Report No. FHWA-IP-86-2) provides information relating observed field conditions to structural deficiencies. This information can be useful for identifying conditions indicative of reduced load-carrying capacity, especially during the evaluation of pipe culverts. When original design plans or as-built plans are

not available, the safe load-carrying capacity of a culvert may be determined as described in Section 4.2.6 for "Analysis of Structures Without Plans".

4.2.5.3.1 Reinforced Concrete Box Culverts

RC box culverts can be of cast-in-place or precast construction. Without regard to method of construction, the structural elements of a RC box culvert are the top and bottom slabs and the vertical walls. Typically, the load rating of a culvert is based on the safe load-carrying capacity of the top slab. The top slabs of concrete box culverts are evaluated in accordance with the AASHTO specifications and the IDOT policies for culvert design.

Although the vertical walls of a RC box culvert are not usually analyzed for determining the culvert load-carrying capacity, the condition of the walls should be considered to assess their capacity to adequately retain the roadway embankment and provide support for the top slab.

Culvert headwalls are typically not analyzed for determining load-carrying capacity. However, if a headwall is adjacent to the edge of a traffic lane, and design plans or other data indicates the headwall was designed as a main load-carrying member, the load-carrying capacity of the headwall should be evaluated.

4.2.5.3.2 Reinforced Concrete Pipe Culverts

RC pipe culverts are manufacture in various sizes and shapes (circular, arched, elliptical). Regardless of the culvert size or shape, the main structural element is the pipe wall. Since determining the amount of reinforcement within an existing pipe wall may be problematic, a pipe culvert's ability to support embankment and traffic loads may be assessed according to observed physical condition, and the safe load-carrying capacity determined as described in Section 4.2.6 for "Analysis of Structures Without Plans".

4.2.5.3.3 Metal Pipe Culverts

Metal pipe culverts are typically manufactured utilizing corrugated steel or aluminum. They are manufactured in various sizes and shapes (circular, arc, elliptical). Regardless of the culvert shape, the corrugated pipe wall is considered a main structural element.

The deflected shape of a metal culvert can provide the engineer with valuable information in regard to the structural adequacy of an existing metal culvert. Also, when a metal culvert is constructed of interconnected corrugated structural plates, the condition of the bolts and the seams at the connections are indicative of structural adequacy.

4.2.5.3.4 Masonry Culverts

Stone masonry culverts are generally box-shaped or arch-shaped. The strength and condition of the box-sides and arches must be considered in assessing structural adequacy. In addition, the condition and strength of the support provided to resist the thrust of an arch must be considered.

4.2.6 Analysis of Structures without Plans

In order to conduct a structural analysis, detailed information describing the properties of the main load-carrying members is necessary. Unfortunately, original design documents or as-built plans are no longer available for many older structures.

4.2.6.1 Steel or Timber Structures without Plans

When design or as-built plan documentation does not exist for a bridge that utilizes steel or timber for the construction of main load-carrying members, an arms-length field inspection must be performed to establish the condition, properties and dimensions of the main load-carrying members. IDOT has developed data collection forms to assist field staff during the collection of structure information, and these forms can be obtained at BB&S Bridge Forms

4.2.6.2 Concrete Structures without Plans

When design or as-built plan documentation does not exist for a bridge utilizing reinforced concrete for the construction of main load-carrying members, the information that can be obtained through the performance of field inspections is limited. Although inspection data can be obtained to establish the external dimensions of the main load-carrying members, determining the size, spacing and location of reinforcement bars incorporated internally within the members is problematic. Although there are electronic inspection devices available for estimating the location and size of reinforcement bars, IDOT has not adopted this technology for rating reinforced concrete bridge members, when plans are not available.

The AASHTO Manual for Bridge Evaluation recognizes the difficulties associated with the performance of a load rating for a concrete structure without plans and includes the following statement within its specifications:

> "For bridges where necessary details, such as reinforcement in a concrete bridge, are not available from plans or field measurements, a physical inspection of the bridge by a qualified inspector and evaluation by a qualified engineer may be sufficient to establish an approximate load rating based on rational criteria. Load tests may be helpful in establishing the safe load capacity for such structures.
>
> A concrete bridge with unknown details need not be posted for restricted loading if it has been carrying normal traffic for an appreciable period and shows no distress. The bridge shall be inspected regularly to verify satisfactory performance."

Based on the guidance provide by the AASHTO specification, IDOT has established criteria for determining appropriate load ratings for concrete bridges with unknown/undocumented reinforcement. The criteria is based on the Condition Ratings assigned to the structure by qualified bridge inspections staff, and the evaluation by a qualified engineer of the structure's condition in regards the traffic carried. The criteria is

presented in tabular form by "Suggested Rating and Posting for Non-analytically Evaluated Structures", see the Appendix of this Manual.

4.3 Design Load Rating

4.3.1 General

A Design Load Rating for a bridge or culvert is performed to assess the load-carrying capacity relative to a specific design live load. The design live loads typically used for the evaluation are those specified in the American Association of State Highway and Transportation Officials (AASHTO) bridge design specifications. A Design Load Rating provides a load-carrying capacity at an Inventory Rating level and an Operating Rating level, which are described as follows:

> Inventory Rating: A load-carrying capacity rating indicative of the permissible live load to which an existing structure may be routinely subjected for an indefinite period of time for the load configuration used in the rating. The Inventory Rating is comparable to a level of stress or a level of reliability used for the design of a structure for determining the proportions of main load-carrying members.
>
> Operating Rating: A load-carrying capacity rating indicative of the maximum permissible live load to which the structure may be subjected for the load configuration used in the rating. The Operating Rating is representative of the maximum load effect that can occasionally be tolerated by a structure without causing appreciable damage. Allowing a structure to be routinely subjected in an unlimited fashion to load effects at the Operating Level may shorten the life of the structure.

Design Load Ratings are based on the condition of the structure as derived from design and as-built plan documentation, shop drawings and field inspections to identify damage or deterioration.

The National Bridge Inspection Standards (NBIS) require the determination of an Inventory Rating and Operating Rating for “all bridges located on public roads” and “having an opening measured along the center of roadway of more than 20 feet”, which corresponds to the “AASHTO Bridge Length” described in Appendix C, Figure 3.1 of the Illinois Department of Transportation (IDOT) Structure Information and Procedure (SIP)

Manual. Beginning in the 1970's, IDOT established policies and procedures to ensure that Inventory and Operating Ratings were determined for all existing, newly-designed, reconstructed or rehabilitated structures subject to the NBIS requirements. To address structures not subject to the NBIS requirements, IDOT also determines Inventory and Operating Ratings for all new and existing structures under State jurisdiction in accordance with the IDOT Small Bridge Inspection Program (SBIP), which is described in Section 3.11 of this Manual. In addition to structures subject to the NBIS or the SBIP requirements, any structure assigned a Structure Number and included in the Illinois Structure Information System (ISIS) must have an Inventory Rating and Operating Rating determined.

The Inventory and Operating Ratings of a new structure are based on the as-built condition of the main load-carrying members. When damage or deterioration to these members occurs or is noted during routine inspections, a load rating evaluation or analysis must be performed to verify or adjust Inventory and Operating Ratings, based on the present condition of the members. To provide the information needed to determine, verify or adjust a Rating, a Load Rating Inspection is required. It is especially important to periodically review the load ratings for structures in poor or worse condition. The IDOT "Load Rating Inspection Policy" is described in Section 3.3.9 and 3.9.3.6 of this Manual.

4.3.2 Assignment of Responsibility

The process used for determining safe load-carrying capacities and load restrictions requires that a Design Load Rating be performed, from which an Inventory Rating and Operating Rating are determined and entered in the ISIS database. Within the SIP Manual, the Inventory Rating is identified as ISIS Item 66 and the Operating Rating is identified as ISIS Item 64. Only personnel of the IDOT Bureau of Bridges & Structures (BBS) are authorized to enter rating information for Items 64 & 66 in the ISIS database.

The Illinois Compiled Statutes (ILCS) grants the authority for determining safe load-carrying capacity solely to IDOT for highway structures serving the "Systems of Highways" described in Article 2 of Chapter 605 (Roads and Bridges) of the ILCS. This group of highway systems is referred to as the "Article 2 Highway System" in this Manual

and is described in Section 4.1.10.1 of this Manual. Except for structures under the jurisdiction of bordering States or a Federal Agency, if the Design Load Rating for structures serving the Article 2 Highway System is not performed by IDOT, concurrence by IDOT with the Inventory and Operating Rating determination is required.

Within the State of Illinois, there are structures serving public roadways not part of the Article 2 Highway System, and information regarding structures serving such roadways is provided in Section 4.1.10.2 of this Manual. The performance of a Design Load Rating is the responsibility of the jurisdictional agency for these structures. Concurrence with the resulting Inventory and Operating Ratings by IDOT is not required. However, the jurisdictional agency is required to submit the resulting Inventory Rating and Operating Rating to IDOT for inclusion in the ISIS database.

To ensure all structures included in the Illinois public highway systems are evaluated to determine safe load-carrying capacity through the performance of a Design Load Rating, coordination between the following public agencies and private concerns is required:

- Federal Agencies
- Bordering States
- IDOT
- Illinois State Agencies
- Illinois State Toll Highway Authority (ISTHA)
- Counties
- Townships
- Road Districts
- Municipalities
- Park Districts
- Railroads
- Private Entities

A “Design Load Rating Responsibility Flow Chart” is provided in Figure 4.3.2-1 to illustrate the interagency coordination and the:

1. Assignment of responsibility for performing a Design Load Ratings
2. Reporting of Design Load Ratings for inclusion in the ISIS
3. Need for concurrence by IDOT with Design Load Ratings

4.3.2.1 State Bridges

The structures serving the Article 2 Highway System under the direct jurisdiction of IDOT are part of the State Highway System, as described in Article 2 of Chapter 605 of the ILCS. IDOT strives to perform all inspections and analyses required for performing Design Load Ratings to determine Inventory and Operating Ratings for structures serving the State Highway System with IDOT staff, and it has been able to accomplish this goal for the vast majority of these structures. Although IDOT has utilized consultant engineering services to assist in the inspection and rating of selected structures, the final determination of ratings for these structures has been performed under the direct supervision of IDOT personnel.

Upon the completion of design plans for each new, reconstructed or rehabilitated state owned structure, personnel within the IDOT BBS perform an analysis to determine the Inventory and Operating Ratings of the structure. This information is subsequently entered in the ISIS, at the appropriate time, for eventual inclusion in the National Bridge Inventory (NBI).

Personnel of the BBS perform or oversee the inspections of more than structures designated as Major Bridges, while Region/District personnel perform routine inspections for all other structures under the direct jurisdiction of IDOT. If damage or deterioration of main-load-carrying members is noted during routine inspections, follow-up Load Rating Inspections are conducted by BBS personnel to assess conditions and quantify the extent of damage/deterioration. Using the inspection information, the affected members are rated to determine if the Inventory and Operating Ratings for the structure should be reduced.

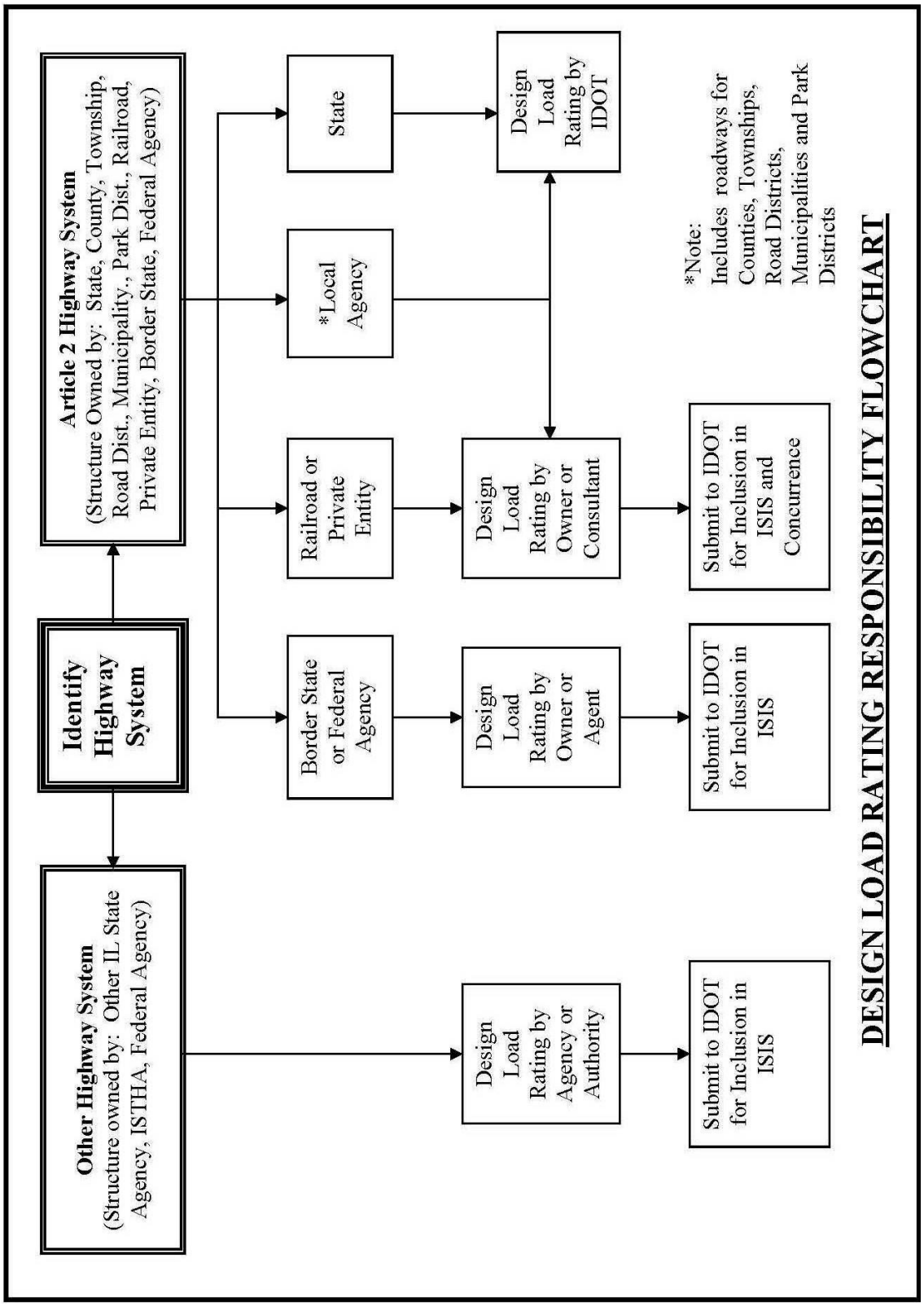
Other Highway System
(Structure owned by: Other IL State Agency, ISTHA, Federal Agency)
Identify Highway System
Article 2 Highway System
(Structure Owned by: State, County, Township, Road Dist., Municipality., Park Dist., Railroad, Private Entity, Border State, Federal Agency)
Design Load Rating by Agency or Authority
Submit to IDOT for Inclusion in ISIS
Border State or Federal Agency
Design Load Rating by Owner or Agent
Submit to IDOT for Inclusion in ISIS
Railroad or Private Entity
Design Load Rating by Owner or Consultant
Submit to IDOT for Inclusion in ISIS and Concurrence
*Local Agency
State
Design Load Rating by IDOT
*Note:
Includes roadways for Counties, Townships, Road Districts, Municipalities and Park Districts
DESIGN LOAD RATING RESPONSIBILITY FLOWCHART

Figure 4.3.2-1

4.3.2.2 Local Agency Bridges

The portions of the Article 2 Highway System under the direct jurisdiction of Counties, Townships, Road Districts, Municipalities and Park Districts are described in Article 2 of Chapter 605 (Roads and Bridges) of the ILCS and in Chapter 3 of the IDOT Bureau of Local Roads and Streets (BLRS) Manual. IDOT has historically provided assistance to Local Agencies in the performance of Design Load Ratings. However, due to limited resources, IDOT has had to limit the degree to which it has participated in Design Load Ratings for structures under the jurisdiction of Local Agencies. Typically, IDOT personnel concentrate efforts and resources towards Design Load Ratings for damaged or deteriorated Local Agency bridges that may require a vehicle weight restriction to address structural deficiencies. Local Agencies may request IDOT assistance for bridge rating by submitting Form BLRS 06510, a copy of which may be obtained on the IDOT website at Local Roads & Streets Bridge Forms. If the performance of a Design Load Rating is critical to address an emergency situation, in addition to submitting Form BLRS 06510, a Local Agency should immediately contact the Local Bridge Unit of the IDOT Bureau of Bridges and Structures or the appropriate District Bureau of Local Roads and Streets to alert personnel to the need for a rapid response. Chapter 6 of the IDOT Bureau of Local Roads and Streets Manual also provides information related to the load rating of Local Agency structures.

In accordance with the "Load Rating & Damage Inspection Policy" presented in Section 3.3.9 and 3.9.3.6 of this Manual, the Local Bridge Unit of the IDOT Bureau of Bridges and Structures monitors changes in bridge Condition Ratings to independently schedule field inspection and Design Load Ratings for bridges with major components in poor or worse condition. This independent action on the part of the Local Bridge Unit should not in any way deter a Local Agency from submitting bridge load rating request for a structure appearing to warrant a rerating due to observed conditions. However, it must be noted that limitation of resources prevents IDOT from providing Design Load Rating services to Local Agencies for major structures requiring snoopers or man-lifts to accomplish field inspections or for bridges serving high traffic volume roadways for which traffic control is necessary to ensure safety.

In those instances when IDOT cannot provide Design Load Rating services, Local Agencies should retain the services of a Consulting Engineer. The engineer performing the rating should be familiar with the AASHTO Manual for Bridge Evaluation and shall be an Illinois Licensed Structural Engineer. Information derived from the rating must be submitted to the Local Bridge Unit for review and concurrence using the "Structure Load Rating Summary" Form BBS 2795, a copy of which may be obtained on the IDOT website at The Bureau of Bridges & Structures Forms. Concurrence by IDOT with the Inventory and Operating Ratings determined by the Consulting Engineer is essential for compliance with federal regulations and state statutes.

4.3.2.3 Railroad Owned Bridges

It is not unusual for a railroad company to own a bridge that carries a public highway over the railroad's tracks. The responsibility for performing a Design Load Rating rests with the railroad. If the bridge provides continuity for a roadway included in the Article 2 Highway System, IDOT must concur with the Inventory and Operating Ratings derived from the Design Load Rating. All railroad company bridges carrying traffic from roadways open to the general public must have Design Load Ratings performed, and Inventory and Operating Ratings must be submitted to IDOT for inclusion in the ISIS database for compliance with federal regulations.

4.3.2.4 Border State and Federal Agency Bridges

IDOT shares maintenance responsibilities for a number of major river bridges that serve the Article 2 Highway System with transportation agencies outside of the State of Illinois. These state agencies are the:

- Indiana Department of Transportation (Wabash River Crossings)
- Iowa Department of Transportation (Mississippi River Crossings)
- Kentucky Transportation Cabinet (Ohio River Crossings)
- Missouri Department of Transportation (Mississippi River Crossings)

By agreement with the adjacent state IDOT equally shares the financial responsibility for maintaining each applicable border bridge. Physical maintenance is always assigned entirely to one of the two States. The State with physical maintenance is responsible for performing the Design Load Rating.

Federal Agencies have jurisdiction and maintenance of structures in Illinois that serve the Article 2 Highway System, as well as other highway systems open to public travel and located within federally owned lands in Illinois. The applicable Federal Agency is responsible for ensuring all actions necessary for compliance with the NBIS are completed, including the performance of a Design Load Rating.

IDOT maintains inventory and appraisal data in the ISIS for structures under the physical maintenance of the Border States and jurisdiction of Federal Agencies, including Inventory and Operating Ratings, but does not perform field inspections or conduct load ratings for these structures. For these bridges, the Border State or Federal Agency is responsible for performing the Design Load Rating and submitting the Inventory and Operating Ratings to IDOT for inclusion in the ISIS. Concurrence by IDOT with the submitted Design Load Rating information is not required.

4.3.2.5 Other Illinois State Agencies and Toll Authority Bridges

Illinois State Agencies, other than IDOT, have primary responsibilities for compliance with NBIS requirements for structures carrying highways under their jurisdiction. Among these agencies are the:

- Illinois Department of Natural Resources (IDNR)
- Illinois Historic Preservation Agency (IHPA)
- Illinois State Toll Highway Authority (ISTHA)

The highway systems maintained by these agencies are not part of the Article 2 Highway System. However, as highway systems open to the public, the structures carrying the roadways within these systems are fully subject to the NBIS regulations in regard to the performance of Design Load Ratings.

Design Load Ratings are performed by the state agency or toll highway authority, and Inventory and Operating Ratings are submitted by the agency or authority to IDOT for inclusion in the ISIS database. When the structure carries an Article 2 Highway System roadway, such as may frequently occur with structures under the jurisdiction of the ISTHA, concurrence with the load rating by IDOT is required.

4.3.3 Method of Analysis

Within the AASHTO Manual for Bridge Evaluation there are three (3) methods provided for determining a structure's Inventory Rating and Operating Rating. Those methods are:

- Allowable Stress Rating (ASR)
- Load Factor Rating (LFR)
- Load and Resistance Factor Rating (LRFR)

The ASR method is the oldest of the three (3) methods provided by the AASHTO specifications. When IDOT instituted a program in the 1970's to load rate structures within Illinois to comply with federal regulations, the ASR method was used as the rating specification, and many older structures within the Illinois bridge inventory still have load ratings based on the ASR method. Although the FHWA prefers that load ratings be based on a method other than ASR, it recognizes the effort to rerate older structures would require agencies to redirect time and funding from other critical programs. It is also recognized that, in terms of safety, the ASR method is the most conservative. The ASR method is only appropriate for bridge elements that cannot be analyzed using the LFR or LRFR methods.

In a November 5, 1993 Policy Memorandum, the Federal Highway Administration (FHWA) indicated the LFR method was to be the standard for computing inventory and operating ratings reported to the NBI. However, with the development of the LRFR method, the FHWA issued a subsequent Policy Memorandum on October 30, 2006 to provide clarification in regard to acceptable rating methods for providing Inventory and Operating Ratings for inclusion in the NBI. A copy of the October 30, 2006 Policy Memorandum titled "Bridge Load Ratings for the National Bridge Inventory" is included in the Appendix of this Manual.

The IDOT policy for selecting an appropriate rating method requires that, at a minimum, the rating method used should be consistent with the AASHTO specification used for the original design of the structure. Based on this policy, the following rating methods may be utilized relative to the related design methods for Existing Bridges:

DESIGN LOAD RATING METHOD FOR EXISTING BRIDGES

Original Design Specifications	Acceptable Rating Method
Allowable Stress Design (ASD)	Allowable Stress Rating (ASR) or Load Factor Rating (LFR) for Bridges rated prior to 1994
	Load Factor Rating (LFR) or Load & Resistance Factor Rating (LRFR) for Bridges rated in 1994 and later
Load Factor Design (LFD)	Load Factor Rating (LFR) or Load & Resistance Factor Rating (LRFR)
Load & Resistance Factor Design (LRFD)	Load & Resistance Factor Rating (LRFR)

Although the IDOT policy allows Inventory and Operating Ratings derived from the use of the ASR method to remain in the ISIS for bridges rated prior to 1994, whenever an opportunity is presented, IDOT updates the ratings for bridges evaluated with the ASR Method by rerating them using the LFR or LRFR Method.

As new bridges are constructed and existing bridges are rehabilitated, Inventory and Operating Ratings must be determined according to the design specification used. IDOT employs the LRFD specifications for designing all new bridges. For bridge rehabilitations, IDOT utilizes either the LFD or LRFD specification dependent on the scope of the project. Other agencies are required to utilize design specifications in like manner for similar projects developed or constructed with federal funding. When non-federal funds are used and IDOT approval is required, other agency projects may be designed using either LFD or LRFD. The method to be used for rating new or rehabilitated bridges is related to the design specification as follows:

RATING METHOD FOR NEW OR REHABILITATED BRIDGES

CONSTRUCTION TYPE	DESIGN SPECIFICATION	ACCEPTABLE RATING METHOD
New	LFD	LFR
	LRFD	LRFR
Rehabilitation	LFD	LFR
	LRFD	LRFR

4.3.3.1 Allowable Stress Rating Method

ASR was the only rating method offered by AASHTO specifications prior to the mid 1970's, and the ASR method was used exclusively to determine Design Load Ratings during the early years of IDOT compliance with the NBIS. With the inclusion of alternate rating method within AASHTO specifications, IDOT has made efforts to rerate bridges originally rated with the ASR method. In many instances, rerating of these bridges with a method other than ASR is only done when the need arises for a verification of load-carrying capacity.

Structures rated using the ASR method are evaluated to determine their load-carrying capacity in relation to the application of an HS20 Design Loading (36 tons gross vehicle weight), as defined by the 2002 AASHTO Standard Specifications for Highway Bridges. The Inventory and Operating Ratings can be expressed in terms of gross vehicle weight (tons) or as a Rating Factor, and the ratings can be submitted to the NBI in either form.

4.3.3.2 Load Factor Rating Method

With the issuance of the FHWA Policy Memorandum in 1993, designating LFR as the standard method for rating bridges and reporting Inventory Ratings and Operating Ratings for inclusion in the NBI, IDOT adopted LFR as its standard method for determining Design Load Ratings.

Structures rated using the LFR method are evaluated to determine their load-carrying capacity in relation to the application of an HS20 Design Loading (36 tons gross vehicle weight), as defined by the 2002 AASHTO Standard Specifications for Highway Bridges. The Inventory and Operating Ratings can be expressed in terms of gross vehicle weight (tons) or as a Rating Factor, and the ratings can be submitted to the NBI in either form.

4.3.3.3 Load and Resistance Factor Rating Method

With the publication in 2003 of the AASHTO "Guide Manual for the Condition Evaluation and Load and Resistance Factor Rating (LRFR) of Highway Bridges", an alternate method was provided for determining Design Load Ratings. This method was

developed to be consistent with the design philosophy utilized in developing the LRFD specifications, which are now the primary design specifications used by IDOT. The LRFR specifications are presently provided by AASHTO in "The Manual for Bridge Evaluation".

Structures rated using the LRFR method are evaluated to determine their load-carrying capacity in relation to the application of an HL-93 Design Load, as defined by the current AASHTO LRFD Design Specifications. This design loading differs from those used by the ASR and the LFR methods for determining the load-carrying capacity, since it consists of the combined and simultaneous application of a Design Vehicle and a Design Lane Load. The Design Vehicle may be either a Design Truck or a Design Tandem, whichever causes the greater load effect, as describe in the following:

- Design Truck: HS20 Design Vehicle (36 ton gross vehicle weight)
- Design Tandem: A pair of 25 kip axles spaced 4 feet apart (25 ton gross)

The Design Lane Load consists of a 640 pound per linear foot lane load uniformly distributed over a 10 foot width. The Inventory and Operating Ratings are determined in terms of a Rating Factor, and the rating must be submitted to the NBI in the form of a Rating Factor.

4.3.4 Design Vehicle / Load Configuration

When performing a Design Load Rating, which requires the determination of an Inventory Rating and Operating Rating, a bridge's load-carrying capacity relative to the live load considered for bridge design is evaluated. In 1944, AASHTO adopted a design vehicle referred to as the "H20-S16-44" truck, or simply as the "HS20" truck. The "H20" in the vehicle designation indicates a design truck whose first two axles have a combined weight of 20 tons. The "S16" in the vehicle designation refers to a trailing axle weighing 16 tons. The "44" is the year in which the vehicle configuration was adopted. "HS" indicates the vehicle is configured as an "H" type tractor truck with a semi-trailing axle. The distance between the two axles of the tractor truck is fixed at 14 feet, while the axle spacing for the semitrailer can vary from 14 feet to 30 feet. The HS20 Design Loading vehicle is depicted in Figure 4.3.4-1.

When performing a Design Load Rating utilizing the ASR or the LFR method, a structure is evaluated to determine its capacity to carry an HS20 Design Loading. In addition, the load effect for the HS20 Design Loading is increased to account for the dynamic application of the load by applying an impact factor.

When performing a Design Load Rating utilizing the LRFR method, a structure is evaluated to determine its capacity to carry an HL-93 "Design Vehicular Live Load" which consists of the combined application of a "Design Truck" or a "Design Tandem" simultaneously with a "Design Lane Load" in a manner that will produce a maximum load effect. The HS20 Design Loading is used as the "Design Truck" for the HL-93 Loading, while the "Design Tandem" consists of two (2) 25 kip axles spaced 4 feet apart. The "Design Lane Load" consists of a 640 pound per linear foot load distributed over a 10 foot lane width. A dynamic load allowance (impact factor) is applied to the load effect of the "Design Truck" to account for the dynamic application of the live load. An impact factor is not applied to the "Design Lane Load". Figure 4.3.4-1 provides an illustration of the "Design Truck", "Design Tandem" and "Design Lane Load".

4.3.5 Existing Structure Modifications

Design Load Ratings must be updated, as the need arises, to determine if structure modifications have affected the load-carrying capacity of the bridge. Modifications to existing structures may occur as a result of intentional actions, such as those associated with maintenance, repair or rehabilitation projects. Structure modifications can also be attributed to environmental or accidental actions, such as long term exposure to moisture and deicing agents or impacts from highway vehicles and river vessels. As structural deterioration progresses or structural damage is identified, the Condition Ratings assigned to the Deck, Superstructure and Substructure should be reduced by bridge inspection staff, as described in the Structure Information and Procedures (SIP) Manual. The reporting of Condition Rating reductions and structural damage by inspection staff is essential to the timely rerating of affected structures.

DESIGN LOAD CONFIGURATIONS

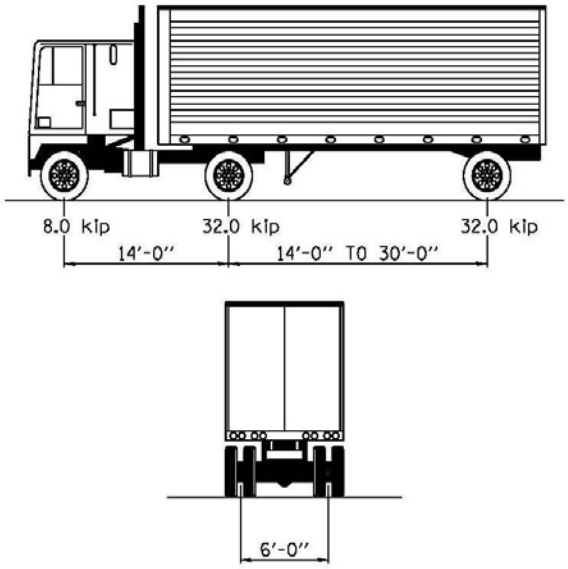

HS–20 DESIGN LOADING & HL–93 DESIGN TRUCK

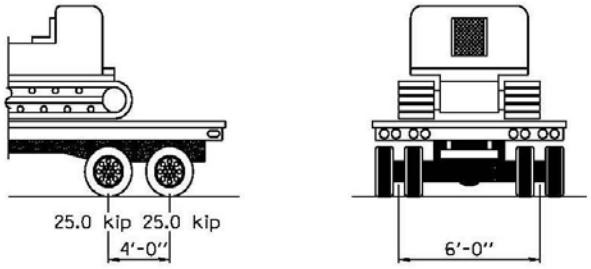

HL–93 DESIGN TANDEM

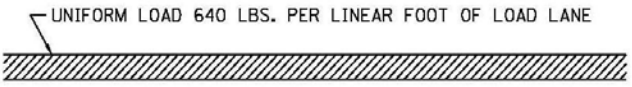

DESIGN LANE LOAD

Transversely, the Design Lane Load shall be assumed to be uniformly distributed over a 10.0 foot width. The force effects from the Design Lane Load shall not be subject to a dynamic load allowance.

Figure 4.3.4-1

4.3.5.1 Additional Overlay / Wearing Surface

Projects to place wearing surfaces on existing bridges are routinely implemented, and Section 1.4 of this Manual provides information relative to the various types of overlay/wearing surfaces. If the net effect of the wearing surface placement increases the amount of dead load carried by the structure, the Inventory and Operating Ratings of the bridge will be reduced by the placement of the overlay. One of the first actions performed, during the development of an overlay/wearing surface project, should be the evaluation of the effect of the placement of the wearing surface on the load-carrying capacity of the bridge. In addition to providing an anticipated Inventory Rating and Operation Rating, the evaluation will determine the degree to which the overlay will affect the capacity of the bridge to carry routine legal load and permit vehicles.

The IDOT Region/District Offices should contact the BBS early in the development of overlay/wearing surface project to request a load-carrying capacity evaluation. If, during a field inspection, an excessive or undocumented thickness of wearing surface is noted, actions should be taken to initiate a load-carrying capacity evaluation to ensure the Inventory and Operating Ratings are appropriate for the amount of wearing surface existing on the structure.

4.3.5.2 Bridge Rehabilitation

Structures are often rehabilitated to enhance functionality and prolong service life. Rehabilitation projects may include:

- Replacement of steel bridge rail with concrete parapet
- Replacement of the bridge deck
- Widening of bridge decks/superstructures
- Addition of main load-carrying members
- Retrofitting of existing load-carrying members
- Conversion to composite-action for main load-carrying members
- Widening and/or retrofitting of substructure units

A Design Load Rating must be conducted to evaluate the feasibility of implementing a bridge rehabilitation project and to determine the extent to which the bridge elements

must be retrofitted to accommodate the scope of the project. These actions are typically done during the Phase I development of a rehabilitation project and the preparation of a Type, Size and Location Sketch (TS&L) or a Preliminary Bridge Design.

4.3.5.3 Structural Damage

Structural damage may occur as a result of;

- Vehicle or vessel collisions with the structure
- Channel debris accumulation
- Streambed scour
- Exposure to fire or explosive events
- Exposure to corrosive materials (deicing agents, etc.)
- Brittle fracture of steel components

When structural damage occurs or is identified, a Design Load Rating must be performed to evaluate the affected structural members. The findings of the evaluation are used to identify actions to remedy the situation, as well as measures that must be implemented until repairs are made to address structural deficiencies.

4.3.5.4 Structural Deterioration

Structural deterioration may be in the form of:

- Corrosion, cracking or deformation of structural steel members
- Corrosion of reinforcement bars
- Corrosion/failure of prestressing steel (wire strands)
- Unsound concrete
- Bond failure between concrete and reinforcement bars
- Failure of reinforcement bar anchorage

Structural deterioration typically occurs over an extended period of time and may progresses to the extent that the load-carrying capacity of a structure is significantly affected. To address the progressive nature of structural deterioration, IDOT developed the “Load Rating & Damage Inspection Policy”, which is presented in Section 3.3.9 and

3.9.3.6 of this Manual. Under this policy, a Design Load Rating must be conducted to determine load-carrying capacity, as bridge inspection personnel lower Condition Ratings to indicate the presence and progression of significant deterioration. It must be noted that, although IDOT procedures are in place to automatically initiate a Load Rating Inspection and Design Load Rating based on reduced Condition Ratings, inspection personnel should not hesitate to alert the BBS of any conditions noted that, in their opinion, warrants further investigation to verify a structure's load-carrying capacity.

4.3.5.5 Temporary Measures

When load-carrying elements are found to be severely damaged or deteriorated, temporary measures are often utilized so the structure can remain in service until permanent repairs are accomplished. The temporary measures, including limited structural repairs, traffic lane restriction, installation of cribbing or erection shoring systems, are intended to supplement the load-carrying capacity of the affected structural element or to reduce the load carried by the element. In these instances, a Design Load Rating must be conducted to determine the load-carrying capacity of the structure under the following conditions:

Condition #1: The affected structural elements carrying the design load as if the temporary measures were not in place.

Condition #2: The affected structural elements carrying the design load, with assistance from the temporary measures, or carrying a reduced load, as a result of temporary measures being in place.

Until permanent repairs are fully implemented, the Inventory and Operating Ratings for a structure are considered to be the values determined under Condition #1. These values are used for NBIS purposes and would be used in determining the Sufficiency Rating of the structure, as described in the SIP Manual for determining eligibility for federal bridge funds.

The Design Load Rating performed under Condition #2 provides and indication of the adequacy of the structure to carry traffic with the temporary measures in place. If the Condition #2 load-carrying capacity is substantially reduced relative to design loads,

additional analysis may be required to establish weight limitations for the vehicles using the structure.

Under both "Temporary Measures" conditions the ISIS Status (Item 41) indicator must be changed to Code "5" or "6".

4.3.6 Load Rating for Concrete Structures without Plans

Guidance for determining Inventory and Operating Ratings of concrete structures, when existing plans are not available, is provided in the Appendix of this Manual ("Suggested Rating and Posting for Non-analytically Evaluated Structures"). The non-analytical evaluation is dependent on the Condition Ratings assigned for "Superstructure", "Substructure" and "Culvert", as described in the SIP Manual. It is also dependent on the evaluating engineer's assessment of the degree to which the structure's condition is being affected by traffic loads or general exposure to the elements.

4.4 Legal Load Rating

4.4.1 General

A Legal Load Rating is performed to assess the safe load-carrying capacity of a structure relative to the unrestricted travel of State legal loads on public roadways. The National Bridge Inspection Standards (NBIS) provides the following definition:

> Legal Load: the maximum legal load for each vehicle configuration permitted by law for the State in which the bridge is located.

Within Chapter 625 of the Illinois Compiled Statutes (ILCS), the Illinois Vehicle Code provides specific information in regard to the configuration and weight of vehicles that can freely travel public roadways. Vehicles that comply with the Illinois Vehicle Code specifications are the Illinois Legal Loads. The operator of a vehicle exceeding the size and weight limitations specified for Legal Loads must obtain permits from jurisdictional agencies prior to traveling on public roadways. The process for evaluating permit requests is discussed in Section 4.5 of this Manual.

The first step for identifying the need for a Legal Load Rating is to perform a Design Load Rating. When a Design Load Rating results in a Rating Factor less than 1.0 at the Inventory Rating level, a Legal Load Rating should be performed to evaluate the load effect of vehicles representative of the Illinois Legal Loads freely traveling on public roadways.

The purpose of a Legal Load Rating is to determine if a structure needs to be posted with a weight limitation to restrict the weight of otherwise legally configured vehicles using the structure. Although a Legal Load Rating should be performed for all structures having a Rating Factor less than 1.0 at the Inventory Rating Level, not all of these structures requiring a Legal Load Rating will require the posting of a weight limit to restrict usage by Legal Loads.

The Legal Load Rating is intrinsically related to the Design Load Rating of a structure, since damage or deterioration of load-carrying members will affect both rating values. When a Legal Load Rating is performed because of recently identified structural damage

or deterioration to main load-carrying members, a Design Load Rating should also be performed. The revised rating information must then be provided to the Illinois Department of Transportation (IDOT) for inclusion in the Illinois Structure Information System (ISIS), as described in Section 4.3 of the this manual. Within the ISIS, Items 70A1, 70B1, 70C1 and 70D1 provide information relative to the maximum allowable gross weight for various vehicle configurations that may safely use the structure.

4.4.2 Assignment of Responsibility

The assignment of responsibility for performing Legal Load Ratings parallels that assigned for performing Design Load Ratings. When a Design Load Rating verifies a Legal Load Rating is not required, or after a Legal Load Rating has been performed, the adequacy of the structure to carry State legal loads and is documented in the ISIS database. As described within the IDOT Structure Information and Procedures (SIP) Manual, ISIS Item 70 (Bridge Posting Level) is used to provide the primary indicator for load-carrying capacity relative to legal loads. When a structure cannot safely carry legal loads, ISIS Items 70A1 through 70C2 are used to document the vehicle weight limits established by the Legal Load Rating.

The ILCS grants the authority for determining safe load-carrying capacity solely to IDOT for highway structures serving the “Systems of Highways” described in Article 2 of Chapter 605 (Roads and Bridges) of the ILCS. This group of highway systems is referred to as the “Article 2 Highway System” in this Manual and is described in Section 4.1. Except for structures under the jurisdiction of bordering States or a Federal Agency, if the Legal Load Rating for structures serving the Article 2 Highway System is not performed by IDOT, concurrence by IDOT with the Legal Load Rating determination is required.

Within the State of Illinois, there are structures serving public roadways that are not part of the Article 2 Highway System, and information regarding these structures is provided in Section 4.1 of this Manual. The performance of a Legal Load Rating is the responsibility of the jurisdictional agency for structures not serving the Article 2 Highway System. Concurrence with the resulting Legal Load Rating by IDOT is not required.

However, the jurisdictional agency is required to submit the results of the Legal Load Rating to IDOT for inclusion in the ISIS database.

To ensure all structures included in the Illinois public highway systems are evaluated to determine safe load-carrying capacity through the performance of a Legal Load Rating, when a Design Load Rating indicates the potential for insufficient load-carrying capacity, coordination between the following public agencies and private concerns is required:

- Federal Agencies
- Bordering States
- Illinois State Toll Highway Authority (ISTHA)
- Illinois State Agencies (including IDOT)
- Counties
- Townships
- Road Districts
- Municipalities
- Park Districts
- Railroads
- Private Entities

A "Legal Load Rating Responsibility Flow Chart" is provided in Figure 4.4.2-1 to illustrate interagency coordination and:

1. Assignment of responsibility for performing a Legal Load Ratings
2. Reporting of Legal Load Ratings for inclusion in the ISIS
3. Need for concurrence by IDOT with Legal Load Ratings

4.4.2.1 State Bridges

The structures serving the Article 2 Highway System under the direct jurisdiction of IDOT are part of the State Highway System, as described in Article 2 of Chapter 605 of the ILCS. IDOT strives to perform all inspections and analyses required for performing Legal Load Ratings for structures serving the State Highway System with IDOT staff. If damage or deterioration of main load-carrying members is noted during a routine inspection, a follow-up Load Rating Inspection is conducted by BBS personnel to assess

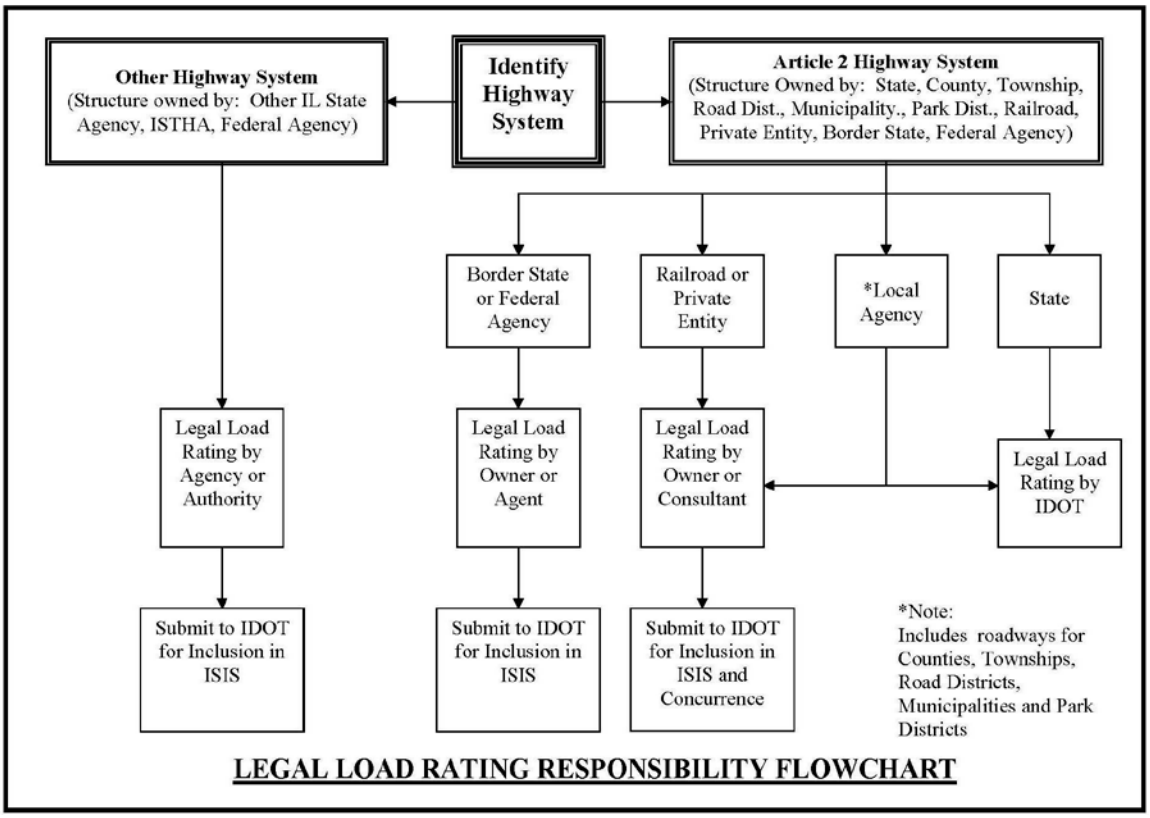

Figure 4.4.2-1

conditions and quantify the extent of damage/deterioration. Using the Load Rating Inspection information, Design Load Ratings are performed for the affected members to determine if a Legal Load Rating is required and, if needed, a Legal Load Rating is performed.

4.4.2.2 Non-State Bridges

Other agencies with jurisdictional responsibility for structures serving the Article 2 Highway System must ensure Legal Load Ratings are performed, when Design Load Ratings or field observations indicate the need for a Legal Load Rating. The requirements and procedures for reporting Legal Load Rating weight limit recommendations to IDOT are the same as those specified for Design Load Ratings in Section 4.3 of this Manual for:

- Local Agency Bridges
- Railroad Owned Bridges
- Private Entity Bridges

- Border State and Federal Agency Bridges
- Other State Agency and Toll Authority Bridges

Weight limit recommendations derived from the ratings must be submitted for review and concurrence to the Local Bridge Unit of the IDOT Bureau of Bridge and Structures. The submittal must utilize the "Structure Load Rating Summary" Form BBS 2795, a copy of which is included on the BB&S website. The recommendations provided to IDOT must be certified by an Illinois Licensed Structural Engineer.

Documentation of IDOT concurrence with the recommended weight limitation is especially important for the effective enforcement of the weight limit. Without documentation, typically in the form of a concurrence letter from IDOT, citations issued for violation of the posted weight limit are subject to dismissal by the court.

4.4.3 Determining Weight Limits

After performing a Legal Load Rating, a decision must be made in regard to the adequacy of the structure to carry legal loads. Above all other factors, the engineer must consider the safe load-carrying capacity derived from the analysis. However, depending on the load rating specifications used, the engineer may apply judgment and experience in determining whether or not posted weight limits are appropriate.

4.4.3.1 Factors Considered

Various factors are considered by the engineer or are incorporated within the rating specifications relative to the determination of need for posted weight limits. Among these factors are:

- Traffic volume and characteristics
- Usage of the structure by overweight permit vehicles
- Effectiveness of weight limit enforcement by policing agencies
- Structure age and condition
- Degree of redundancy of main load carrying members
- Reliability and extent of inspection information
- Availability of design or as-built plans
- Availability of construction documentation

4.4.3.2 Method of Analysis

Within the "The Manual for Bridge Evaluation" provided by the American Association of State Highway and Transportation Officials (AASHTO), there are three (3) methods presented for performing a Legal Load Rating. Those methods are:

- Allowable Stress Rating (ASR)
- Load Factor Rating (LFR)
- Load and Resistance Factor Rating (LRFR)

These are the same methods described in Section 4.3 of this Manual for determining Design Load Ratings.

The method selected for the Legal Load Rating should be that which allows the bridge to be utilized to the fullest, while providing the engineer with an appropriate degree of confidence in the analysis. Usually, the method used for the Legal Load Rating would be as follows:

LEGAL LOAD RATING METHOD FOR EXISTING BRIDGES

ORIGINAL DESIGN SPECIFICATIONS	ACCEPTABLE RATING METHOD
Allowable Stress Design (ASD)	Load Factor Rating (LFR)
	Load Resistance & Factor Rating (LRFR)
	Allowable Stress Rating (ASR) only when rationally appropriate
Load Factor Design (LFD)	Load Factor Rating (LFR)
	Load & Resistance Factor Rating (LRFR)
Load & Resistance Factor Design (LRFD)	Load & Resistance Factor Rating (LRFR)

4.4.3.2.1 Allowable Stress Rating (ASR) Method

Although the LFR and LRFR methods should be given preference over the ASR method, the ASR method may be used on a limited basis for performing Legal Load Ratings. The ASR method is often used for evaluating timber structures, and occasionally used when the LFR or LRFR methods are not applicable or provide results not compatible with observed structural conditions and the performance history of a structure.

When using the ASR method, an Inventory Rating and an Operating Rating are determined, based on the load effects of vehicles representative of State legal loads, in accordance with the ASR procedures established by the AASHTO specifications for Design Load Rating. The Inventory and Operating Rating represent a range of safe load-carrying capacity, with the Inventory Rating representing the capacity for routine and frequent use by the analyzed Legal Load, and the Operating Rating representing the upper limit for capacity relative to occasional use by the analyzed Legal Load.

When using the ASR method, the engineer must use judgment and experience to select a safe load-carrying capacity within the range defined by the Inventory and Operating Ratings. Various factors, such as those previously mentioned in Section 4.4.3.1, influence the engineer's selection of safe load-carrying capacity and decisions in regard to the need for posted weight limits. If the load effect of the analyzed Legal Load exceeds the safe load-carrying capacity based on the Operating Rating, the structure must be posted with a weight limitation to alert operators of such legally configured vehicles to use an alternate route.

4.4.3.2.2 Load Factor Rating (LFR) Method

The Legal Load Rating for the majority of Illinois structures is based on the LFR method of analysis, since the LFR method has been the primary specification used to perform Design Load Ratings, based on Federal Highway Administration (FHWA) directives.

When using the LFR method, an Inventory Rating and an Operating Rating are determined in accordance with the LFR procedures established by the AASHTO specifications for Design Load Rating. The Inventory Rating and Operating Rating represent a range of safe load-carrying capacity, with the Inventory Rating representing the capacity for routine and frequent use by the analyzed Legal Load, and the Operating Rating representing the upper limit for capacity relative to occasional use by the analyzed Legal Load.

When using the LFR method, the engineer must use judgment and experience to select a safe load-carrying capacity within the range defined by the Inventory and Operating Ratings. Various factors, such as those previously mentioned in Section 4.4.3.1,

influence the engineer's selection of safe load-carrying capacity and decisions in regard to the need for posted weight limits. If the load effect of the analyzed Legal Load exceeds the safe load-carrying capacity based on the Operating Rating, the structure must be posted with a weight limitation to alert operators of such legally configured vehicles to use an alternate route.

4.4.3.2.3 Load and Resistance Factor Rating (LRFR) Method

The LRFR method for performing Legal Load Ratings was fully established by AASHTO with the 2003 publication of the "AASHTO Manual for Condition Evaluation and Load Resistance Factor Rating of Highway Bridges" and is now provided by AASHTO in "The Manual for Bridge Evaluation". Although the LRFR method may be used to perform a Legal Load Rating for the many structures serving roadways in Illinois, it is presently being used by IDOT only for structures designed using the Load and Resistance Factor Design (LRFD) specifications.

The LRFR method for Legal Load Rating provides a single safe load-carrying capacity for the analyzed legal load, rather than a range of capacity defined by an Inventory Rating and Operating Rating. In this respect, the LRFR method differs from the ASR and LFR methods, and the engineer does not apply personal judgment and experience in selecting a safe load-carrying capacity through consideration of the various factors related to such items as bridge condition and functionality. However, the judgment and experience of the engineer may be employed to a limited extent in the application of the Load Factors and Resistance Factors provided within the LRFR specifications. The "Factors" selected by the engineer and incorporated within the LRFR Legal Load Rating analysis address the following site specific conditions:

- Structural system type and redundancy
- Condition of the structure
- Configuration of legal load
- Traffic volume
- Number of traffic lanes

4.4.4 Legal Load Configurations

When a Design Load Rating indicates a Legal Load Rating may be required, the structure should be evaluated to determine the safe load-carrying capacity for each of the Illinois Posting Vehicles shown in Figure 4.4.4-1 and Figure 4.4.4-2. The Illinois Posting Vehicles are representative of the Legal Loads allowed by the Illinois Vehicle Code and provide load configurations for "Single-Unit Trucks" and "Single-Trailer Trucks". Through the utilization of the Illinois Posting Vehicles for the Legal Load Rating, the engineer is not required to analyze the structure for every Legal Load combination allowed.

The Type 2, Type 3 and Type 4 Single-Unit Trucks represent vehicles utilizing a single frame, such as dump-trucks, garbage-trucks, camping and recreational vehicles, motor homes, minibuses, etc. Although the depicted Single-Unit Trucks do not comply with the Federal Bridge Formula, they are allowed access to state highways by the ILCS. The depicted Type 3-S1 and Type 3-S3 Single-Trailer Trucks represent vehicles allowed by the Illinois Vehicle Code and complying with the federal Bridge Formula. The Type 3-S2 Single-Trailer Truck represents a vehicle that does not comply with the federal Bridge Formula but is allowed as a "grandfathered" vehicle with registration in Illinois as a "Special Hauling Vehicle".

4.4.5 Allowable Gross Vehicle Weight

After an analysis is performed using ASR, LFR or LRFR, a Rating Factor (RF) will be derived for the analyzed vehicle configuration, as described in Section 4.2 of this Manual. An allowable Gross Vehicle Weight (GVW) for the analyzed vehicle can be determined by multiplying the GVW of the analyzed vehicle by the derived RF. This method of determining allowable GVW is based on the premise that all individual axle loads are decreased or increased in manner directly proportional to the RF, which is essentially the ratio of the allowable GVW to the analyzed GVW.

Determining the load to which a structure can safely be subjected in the form of GVW for various vehicle configurations is consistent with the bridge rating specifications

ILLINOIS POSTING VEHICLES

SINGLE–UNIT

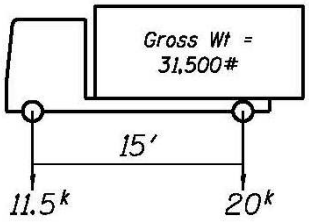

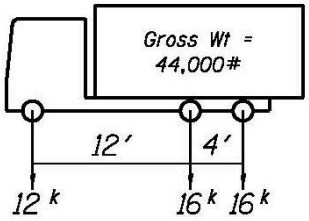

	Empty Weight	GVW
Single Unit		
Type 2	4 Tons	15.75 Tons
Type 3	8 Tons	22 Tons

Figure 4.4.4-1

ILLINOIS POSTING VEHICLES

SEMI–TRAILER

	Empty Weight	GVW
3 or 4 axles		
Type 3-S1	12 Tons	29.25 Tons
5 or more axles		
Type 3-S2-1	13 Tons	40.75 Tons
5 or more axles		
Type 3-S2-2	13 Tons	40 Tons

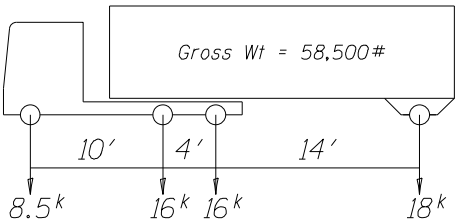

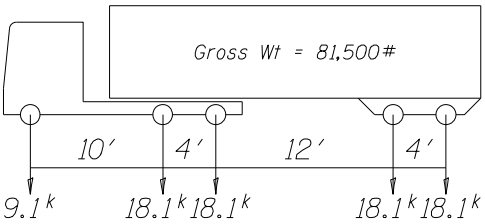

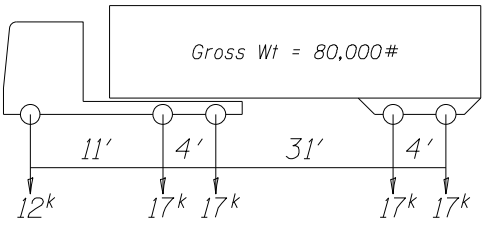

Figure 4.4.4-2

provided by AASHTO and with the obligations assigned to IDOT by the ILCS. Since most structures are long enough to allow multiple axles of an analyzed vehicle to be placed on the structure simultaneously, the use of GVW as a measurement for load restrictions is required for all structures, except for Legal Load Only restrictions of some very short spans serving the Designated State Truck Route System. Section 4.4.6.1 of this Manual provides information related to this exception.

4.4.6 Implementing Bridge Weight Restrictions

Based on a Legal Load Rating, the engineer will conclude that one of the following is appropriate:

- No action is required. The structure is capable of carrying state legal loads. However, a further evaluation based on the Routine Permit Vehicles (Figure 4.5.4.2-1) may determine that a Legal Load Only posting must be implemented.
- A posted weight limit designating a weight less than allowed by the Illinois Vehicle Code is required. The structure is not capable of carrying fully-loaded state legal loads and a posted weight limit must be implemented so load effects will not exceed the safe load-carrying capacity of the structure.
- A bridge closure is required. The routine traffic load effects will exceed the safe load-carrying capacity, therefore the implementation of posted weight limits will not address safety and the structure must be closed.

When choosing a course of action, the engineer must always consider various traffic environment factors. Of special concern are the potential for vehicle violations of the weight restrictions, and the enforceability of posted weight limits by law enforcement agencies.

On occasion, to ensure public safety, emergency situations will require the temporary posting of weight limits until a damaged structure can be inspected and rated by appropriate personnel. Although these emergency weight limit postings or closures may have limited legal enforceability, owners are encouraged to implement and maintain such measures until trained personnel have evaluated the conditions that initiated the emergency traffic restrictions.

When the decision has been made to implement a posted weight limit or closure, it is the responsibility of the agency with jurisdiction of the roadway carried by the bridge to erect the necessary signs as soon as possible to alert traffic of the weight limitations, except in those cases when the owner of the structure accepts the responsibility for signage. To ensure violations of the weight limitation can be successfully prosecuted, the posted weight limitation must be in accordance with the specific weight limits provided by the IDOT Bureau of Bridges and Structures, and the signage must comply with the requirements of the national Manual for Uniform Traffic Control Devices (MUTCD) for Streets and Highways, along with the Illinois Supplement. The agency with roadway jurisdiction should notify appropriate school districts, emergency service providers and other affected agencies of the load restriction so they may alter bus service or emergency access procedures affected by a posted structure weight limit. When contacting affected agencies, it must be stressed that only buses and emergency vehicles with a gross weight equal to or less than the posted limit may safely and legally use the structure.

After a posted weight limitation has been erected, the ISIS database must be updated to include information in regard to the established load restriction. Within the ISIS and as described in the SIP Manual, Items 70A2, 70B2, 70C2 and 70D2 provide information relative to weight limits physically implemented by signage. Figure 4.4.5-1 illustrates signage typically used for implementing weight limits.

4.4.6.1 Weight Restrictions Below Legal Loads

Structures posted with weight limits have been analyzed using AASHTO specifications and determined to have insufficient capacity to safely carry vehicles conforming to the weight and configuration limitations specified in the Illinois Vehicle Code. The analysis is based on the load effects of the Illinois Posting Vehicles described in Figures 4.4.4-1 and 4.4.4-2. These structures must be posted with weight limit signs to alert operators of legally configured vehicles weighing in excess of the applicable posted weight limit not to cross the structure and to use an alternate route.

A posted weight limit may indicate one maximum allowable gross tonnage for all vehicles using the structure, which is usually the case for structures with substantially

reduced load-carrying capacity. For a structure that has a less significant reduction in load carrying capacity, it may be appropriate to provide a posted weight limit that indicates varying maximum allowable gross tonnages, based on the configuration of a vehicle and the number of axles employed by a vehicle. Although strongly discouraged, a posted weight limit may consist of restricting the number of heavy vehicles allowed to simultaneously use a structure by erecting posting signs stipulating the structure should be used by only one truck at a time. The use of a one-truck-at-a-time posting is restricted to bridges serving roadways with relatively low traffic volumes on which heavy vehicles can easily identify one another and readily reduce speed.

4.4.6.2 Bridge Closures

The AASHTO Manual for Bridge Evaluation states:

> "A Bridge Owner may close a structure at any posting threshold, but bridges not capable of carrying a minimum gross live load weight of three tons must be closed."

This lower limit of three (3) tons is commonly applied to structures carrying roadways with low traffic volumes and few heavy vehicles, which can be easily detoured. Since structures serving the State Highway System typically carry a significant number of heavily loaded vehicles, structures under the jurisdiction of IDOT are usually closed when a Legal Load Rating indicates the safe load-carrying capacity is less than 15 tons for a typical Legal Load configured as a truck having five (5) or more axles. This limit of 15 tons was selected as representative of the anticipated empty weight of legally loaded trucks frequently traveling on high volume roadways.

When implementing a bridge closure, the barricades or other obstructions placed to prevent vehicles from accessing the structure must be installed or placed in a manner that will prevent motorist from circumventing the closure and crossing the structure. Advance warning signs should be employed to alert motorists of the closure, allowing vehicles to access alternate routes prior to encountering the closed bridge.

BRIDGE
WEIGHT LIMIT
10 TONS AXLE
40 TONS GROSS

VEHICLE
(R12-I108)

BRIDGE
AXLE
WEIGHT
LIMIT
10 TONS

AXLE
(R12-2)

LEGAL LOAD ONLY

BRIDGE
WEIGHT
LIMIT
10
TONS

SINGLE WEIGHT LIMIT
(R12-1)

BRIDGE WEIGHT LIMIT – TONS	
SINGLE VEHICLE	16
COMBINATION VEHICLE	26

TWO VEHICLE CONFIGURATIONS
(R12-I101)

BRIDGE WEIGHT LIMIT – TONS	
SINGLE VEHICLE	17
COMBINATIONS	
3 OR 4 AXLES	23
5 OR MORE AXLES	30

THREE VEHICLE CONFIGURATIONS
(R12-I100)

MULTIPLE WEIGHT LIMITS

BRIDGE
RESTRICTED
TO ONE TRUCK
AT A TIME

VEHICLE USAGE RESTRICTION
(R12-I106 or -I107)

BRIDGE
CLOSED

BRIDGE CLOSURE
(R11-2)

3 MILES AHEAD

ADVANCED WARNING
(R12-I102)

Note: Sign designations in parentheses are from the National MUTCD and the Illinois Supplement.

TYPICAL BRIDGE POSTING SIGNS

Figure 4.4.5-1

4.4.7 Monitoring Bridge Weight Limits

After posting signs or barricades have been erected, it is important that they be routinely monitored to verify the presence of the signs and to identify any need for sign or barricade repair or replacement. The frequency of monitoring should be appropriate for the classification of the roadway served by the structure and the potential for or history of sign damage. The monitoring of posting signs and bridge closures should be considered a high priority for ensuring roadway safety. Although verification of signage should be included during every review of the structure conducted in accordance with the requirements of the National Bridge Inspection Standards (NBIS), as described in Section 3 of this Manual, it should be performed at every opportunity.

4.4.8 Removing or Altering Bridge Weight Limits

Structures are often posted due to specific deficiencies related to damage or deterioration of load-carrying members, and it is not unusual for repairs or retrofits to be later implemented to address these deficiencies. After deficiencies have been addressed, a field review of the implemented measures must be conducted, and an analysis must be performed to determine the safe load-carrying capacity of the structure with the implemented measures considered. The process includes the determination of a Design Load Rating and, if necessary, a Legal Load Rating. The procedures followed should be the same as previously presented for initial Design Load Ratings and Legal Load Ratings, with concurrence from IDOT obtained, as necessary. The implemented measures and subsequent ratings could result in:

- a closed structure being reopened to traffic.
- a posted weight limit being adjusted to allow heavier vehicles.
- the removal of a posted weight limit.

4.4.9 Posted Weight Limits Information

IDOT maintains information on its website at http://www.idot.illinois.gov/ to assist highway users with locating truck routes and structure usage restrictions. The IDOT website also provides a featured program titled “Bridge Information” that can be used to access ISIS data for any inventoried structure within Illinois. Within the portion of the IDOT website

dedicated to "Public Partners", information can be obtained by utilizing "SIMS-County", a database application utilizing Microsoft Access that allows local agencies to obtain the ISIS information for all of the structures under their jurisdiction.

4.4.10 Excessively Loaded Legal Vehicle Configurations

IDOT has utilized weigh in motion (WIM) technology to collect data describing the weight and configuration of heavy vehicles freely traveling on Illinois roadways. The collected information indicates that vehicles dimensionally configured to comply with the Illinois Vehicle Code often are loaded beyond those limits. These overloaded vehicles may gain frequent access to public roads in areas where vehicle operation is not subjected to routine weight monitoring by law enforcement agencies.

In addition to providing for the safety of the traveling public, Legal Load Ratings are performed to protect highway infrastructure from undue damage. When a bridge carries a high volume of truck traffic not subject to routine weight monitoring, additional analysis may be performed to assess the load effect of excessively loaded legal vehicle configurations. Based on WIM data, the vehicle configurations provided in Figure 4.4.10-1 should be used for the overloaded vehicle analysis. The configurations shown in Figure 4.4.10-1 are not meant to be literal depictions of actual overloaded vehicles, but are intended to provide vehicle configuration capable of causing load effects similar to the vehicles identified by WIM data. Determining the load effect caused by the representative overloaded vehicles will allow a structure owner to estimate reductions in structure service life and to demonstrate relative load effects to vehicle operators.

EXCESSIVELY LOADED LEGAL VEHICLE CONFIGURATIONS

	Empty Weight	GVW
5 or more axles		
Type 3-S2	14 Tons	48.6 Tons
Type 3-S2	15 Tons	56 Tons

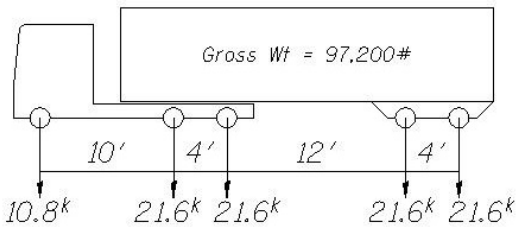

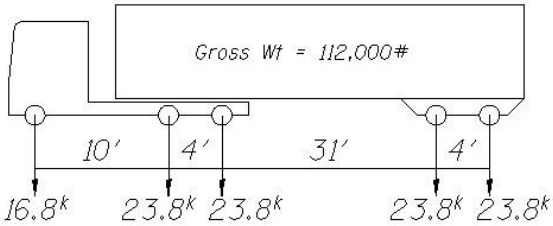

Figure 4.4.10-1

4.5 Permit Load Rating

4.5.1 General

Permit Load Ratings are performed to evaluate the load effect of vehicles that do not comply with Legal Load requirements as discussed in Section 4.4 based on the vehicle configuration and gross weight limitations established by state law for unrestricted access to public highways as delineated in the Illinois Vehicle Code. These overweight vehicles are generally referred to as Permit Loads. A Permit Load Rating determines the safe load-carrying capacity of a bridge with respect to the Permit Load used in the evaluation.

The American Association of State Highway and Transportation Officials (AASHTO) Manual for Bridge Evaluation (MBE) defines two permit classifications:

- Routine (Annual) Permits – "Routine Permits are usually valid for unlimited trips over a period of time, not to exceed one year. The permit vehicles may mix in the traffic stream and move at normal speeds without any movement restrictions. Some permits may be restricted to specific routes."
  Similarly, the National Bridge Inspection Standards (NBIS) describes a Routine Permit Load as, "A live load, which has a gross weight, axle weight or distance between axles not conforming to State statutes for legally configured vehicles, authorized for unlimited trips over an extended period of time to move alongside other heavy vehicles on a regular basis."

- Special (Limited Crossing) Permits – "Special permits are usually valid for a single trip only or for a limited number of trips. These permit vehicles are usually heavier than those vehicles issued routine permits."

Procedures have been established by statute to allow the operator of an overweight vehicle to obtain a routine or special permit for the vehicle to travel on Illinois public roads. These procedures are provided in the Illinois Vehicle Code under the provisions of "PERMITS" (625 ILCS 5/15 Article III). Overweight vehicles are those with weight

exceeding the maximum specified in "SIZE, WEIGHT AND LOAD" (625 ILCS 5/15 Article I).

The Illinois Department of Transportation (IDOT or, Department) developed the Oversize/Overweight Permit Policy (OOPP) Manual to provide information about the types of permits that can be obtained for roadways under the jurisdiction of the Department. IDOT issued Routine Permits are called, "Permits for Limited Continuous Operation", which allow an overweight vehicle to continuously travel on a designated truck route system for a period of up to one (1) year. Special Permits are issued by IDOT for "Single Trip", "Round Trip" and "Repeated Moves of Like Objects". The OOPP Manual was prepared specifically for the highway system under the jurisdiction of IDOT. Other agencies may establish their own policies and procedures for evaluating and issuing overweight vehicle permits, within the limits established by the Illinois Vehicle Code.

A critical issue in the permitting process is evaluation of bridges that will carry an overweight vehicle. The principal concerns regarding overweight vehicle movement on a bridge are gross vehicle weight (GVW), number of axles, axle loads, axle spacing and wheel track. Overweight permits may normally be issued, according to the ILVC, to a "single nondivisible object that cannot reasonably be dismantled or disassembled." This provision is intended to minimize the occasions when bridges must be subjected to overweight vehicles, by requiring a divisible load to be carried by more than one vehicle. However, there are divisible load exceptions specified in the ILVC for hauling perishable commodities, such as agricultural or dairy products.

The MBE states in Section 6A.1.5.3, "Permit load rating checks the safety and serviceability of bridges in the review of permit applications for the passage of vehicles above the legally established weight limitations."

The MBE also states in Section 6.2.1, "Every effort should be made to minimize hardships related to economic hauling without jeopardizing the safety of the public." These principles, as well as prevention of damage to the structural members of the bridge, should be utilized when evaluating an overweight permit request.

4.5.2 Assignment of Responsibility

Overweight permits are issued according to jurisdiction of the highways upon which the overweight vehicle is proposed to travel. Within the Illinois Vehicle Code it is stated that permits may be issued by "the Department with respect to highways under its jurisdiction and local authorities with respect to highways under their jurisdiction". When a bridge within a proposed route is under separate ownership, the vehicle operator must obtain a permit from both the owner of the bridge and the owner of the highway prior to traveling along the proposed route. The operator of an overweight vehicle must obtain a separate permit from each jurisdictional authority whose highways and bridges will be utilized by the permitted vehicle.

4.5.2.1 State Bridges

Overweight vehicle permit applications for travel on highways under IDOT jurisdiction are submitted to the Permit Unit of the Bureau of Operations. If the application is for a Routine Permit the Permit Unit determines whether the vehicle meets qualifying characteristics to allow for issuance of the permit. For Special Permits the Permit Unit submits a request for evaluation of the IDOT owned bridges located along the proposed permit route to the Ratings Unit of the Bureau of Bridges and Structures (BBS), which performs a Special Permit Load Rating. If the rating indicates the affected bridges have sufficient capacity, the Bureau of Operations will issue a permit allowing the overweight vehicle to use the highway and bridges. The operator of the overweight vehicle must also obtain a permit from the owners of any bridges owned by another authority prior to traveling on the proposed route.

A high priority is assigned by the Ratings Unit to the evaluation of bridges for overweight Special Permits and they are normally performed in a very short time. However, the time required may greatly increase due to the size, complexity and condition of the bridges that must be evaluated. Additionally, more time may be needed to evaluate bridges for heavier and larger permit vehicles.

4.5.2.2 Non-State Bridges

Overweight permit evaluation on non-IDOT highways are the responsibility of the local authorities or other agency with highway or bridge jurisdiction. It is important that these agencies have policies and procedures to insure that overweight vehicle use of bridges on their highways is properly evaluated. Local authorities may utilize the Federal Bridge Formula, as presented in Section 4.1 of this Manual, when evaluating requests for overweight vehicle permits. When permit load evaluations require the performance of a structural analysis to determine the load effect of an overweight vehicle, the Special Permit Load Rating shall be performed or overseen by an Illinois Licensed Structural Engineer.

Bridges on a proposed permit route are most often owned by the agency with jurisdiction of the highway, and that agency is responsible for evaluation of those bridges. While a permit for an overweight vehicle is, according to the ILVC, requested according to highway jurisdiction, some bridges on routes under one agency's jurisdiction are owned and maintained by a separate entity. In such cases, the operator of the overweight vehicle must obtain a permit from the owner of the bridge and the owner of the highway, prior to traveling on the proposed permit route.

4.5.3 Permit Vehicle Information

In order to analyze a bridge to determine the load effect for an overweight vehicle, the following vehicle information must be provided:

- Gross Vehicle Weight
- Number of Axles (utilized to carry the gross vehicle weight)
- Weight on Each Axle (steering axle to trailing axle)
- Axle Spacing (distance center to center of axles)

On occasion, the configuration of an overweight vehicle may be such that the vehicle wheel track must be described, and information describing the individual wheel loads and the spacing of the wheels on each axle may be needed for determining the load effect on the bridge.

Bureau of Operations form 1928 is used by vehicle operators to request a Special (Limited Crossing) Permit from IDOT, and vehicle weight and dimensional information is provided with the submission of this form. For Routine (Annual) Permit request, Bureau of Operations form 2600A is used to define the vehicle configuration and weight.

4.5.4 *Legal Load Only Bridges*

"Legal Load Only" bridges are those having a load-carrying capacity sufficient only to be utilized by vehicles conforming to the weight and configuration limitations legally specified in the Illinois Vehicle Code. This determination is made when a Permit Load Rating is performed and the bridge is found to have insufficient capacity to safely support any one of the Routine Permit Vehicles (Figure 4.5.4.2-1). Permits may not be issued by the jurisdictional agency to allow the passage of overweight vehicles over these structures. If an agency allows routine permit loads to travel on roadways under its jurisdiction. Legal Load Only structures should be posted with signage to alert operators not to cross the structure with such vehicles and to use an alternate route.

IDOT has established a limited policy to allow a Legal Load Only weight limit posting to be based on axle loads, rather than GVW. This only applies to structures on a route designated for Routine Permit Loads, whose length will only allow one single, tandem or tridem axle on it at a time. This use of bridge weight limit signs based on legal axle loads is the only deviation by IDOT from establishing bridge weight limits based on GVW.

Figure 4.4.5-1 in Section 4.4.5 of this Manual provides an illustration of the posting signs used for Legal Load Only weight limits.

4.5.5 Routine Permits and Truck Routes

The IDOT BBS is responsible for the evaluation of all bridges maintained by IDOT in order to provide for issuance of Overweight Routine and the development of the Designated State Truck Route System.

4.5.5.1 Routine (Annual) Permits

IDOT issues Routine (Annual) Permits for overweight vehicles to be allowed unlimited operation on the Designated Truck Route System. The weight and configuration of the overweight vehicle is compared to those shown in Figure 4.5.4.2-1 in order to verify the load effect of the proposed vehicle is acceptable for issuance of the permit. The Routine Permit request is submitted to IDOT by vehicle operators using Bureau of Operations Form 2600A.

4.5.5.2 *Designated State Truck Route System*

IDOT has established Designated Truck Routes to facilitate the movement of oversize and overweight vehicles, especially those operating under a Routine Permit. The bridges and culverts on the Designated Truck Routes have been pre-analyzed and found adequate for the Routine Permit Vehicles illustrated in Figure 4.5.4.2-1. Additionally, the Ratings Unit of the BBS continuously monitors the need for reevaluation of the structures. The Routine Permit Load Ratings are updated whenever field inspection data indicates a substantial change in bridge condition has occurred or if damage has been reported that has potential for affecting the structural capacity since the last Load Rating was performed. When the Permit Load Rating indicates the structure no longer has the load carrying capacity to accommodate one or more of the Routine Permit Vehicles, the structure is restricted to Legal Loads Only and no overweight vehicles are allowed to cross the structure until it has been repaired or replaced.

The practical weight limits established for overweight vehicles allowed under Routine Permits to be operated on the Designated State Truck Route System are:

- 6-axle tractor semitrailer combinations: maximum of 120,000 pounds gross; 48,000 pounds on drive tandem; 60,000 pounds on semitrailer tridem.
- 5-axle tractor semitrailer combinations: maximum of 100,000 pounds gross; maximum of 48,000 on either tandem.
- 4-or-more-axle vehicle (axle spacing 23 feet or more): maximum of 76,000 pounds gross; maximum of 34,000 pounds on one tandem and 44,000 pounds on the other.
- 3-or-more-axle vehicle (axle spacing 18 feet or more): maximum 68,000 pounds gross; 20,000 pounds on one axle and 48,000 pounds on the tandem.

Information describing the IDOT Designated Truck Routes can be found in the "Truck" information provided on the IDOT website.
The information provided includes:

- Route Classification (I, II, or III)
- Route Jurisdiction (State or Local)
- Location of Posted Bridges

All overweight vehicles traveling on the IDOT Designated Truck Routes, under the provisions of either a Routine Permit or a Special Permit, must abide by posted bridge weight limits.

Local Agencies may establish Designated Truck Routes for the roadways under their jurisdiction. They may also incorporate portions of their roadway system within Designated State Truck Routes.

4.5.6 Special (Limited Crossing) Permits

An Overweight Vehicle not in compliance with the axle and gross weights, and axle spacing limitations shown for the Illinois Routine Permit Vehicles, as shown in Figure 4.5.4.2-1, is referred to as a "Superload" and requires a Special (Limited Crossing) Permit. A Special Permit only allows the subject vehicle to travel on the specific roadways indentified within the permit. Figure 4.5.4.2-2 provides an illustrated example of an overweight vehicle that would require a Special Permit and would be considered a "Superload".

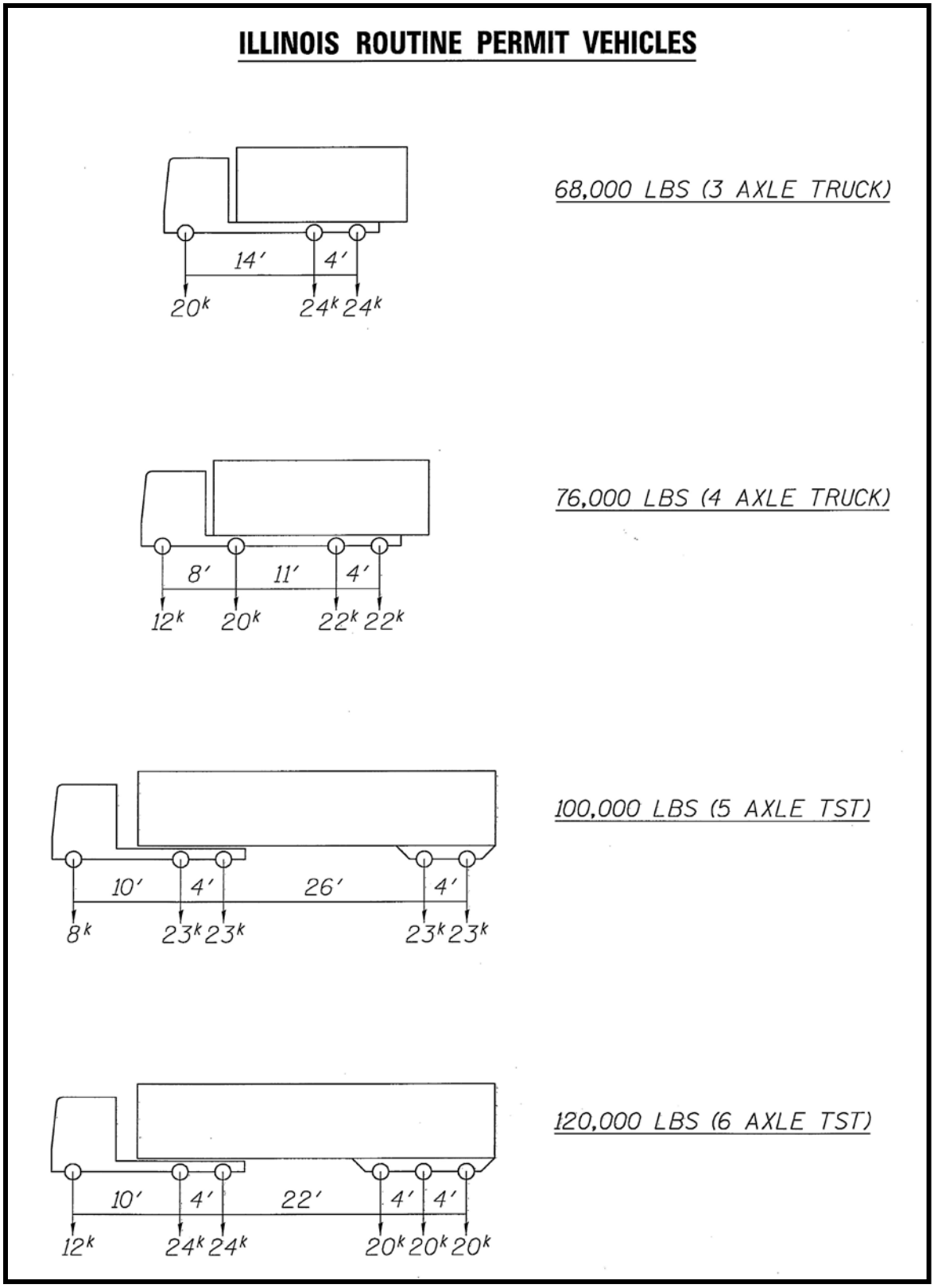

Figure 4.5.4.2-1

For Superload vehicles, a Special Permit Load Rating is performed using the weight and configuration information submitted to IDOT specifically for the overweight vehicle described in the permit application. Through a Permit Load Rating, IDOT evaluates the load effect on IDOT owned bridges proposed to be crossed and determines if a Special Permit may be issued. Issuance of a permit could require special restrictions such as reduced speed, load positioning or traffic prohibitions.

4.5.6.1 Evaluation of Bridges for Permit Loads

The evaluation of a bridge for proposed use by an overweight vehicle is primarily concerned with its effect on the main structural members of the bridge superstructure. The structural elements of the substructure are typically not analyzed by computation, unless the engineer identifies specific structural elements that may be substantially affected by the overweight vehicle loading. An example of a substructure element that should be analyzed is a steel pier cap that functions like a floor beam or cantilever. Evaluation of other structural elements may be required when their serviceability is significantly compromised by deterioration or other damage.

4.5.6.1.1 Factors Considered

Various factors are considered by the engineer or are incorporated within the AASHTO rating specifications relative to the determination of safe load-carrying capacity for a specific overweight permit vehicle. Among these factors are:

- Selection of the appropriate AASHTO load rating specifications
- Structural system type and redundancy
- Condition of the bridge
- Configuration of the overweight vehicle
- Traffic volume
- Number of traffic lanes
- Reliability and extent of inspection information
- Availability of design or as-built plans
- Availability of construction documentation

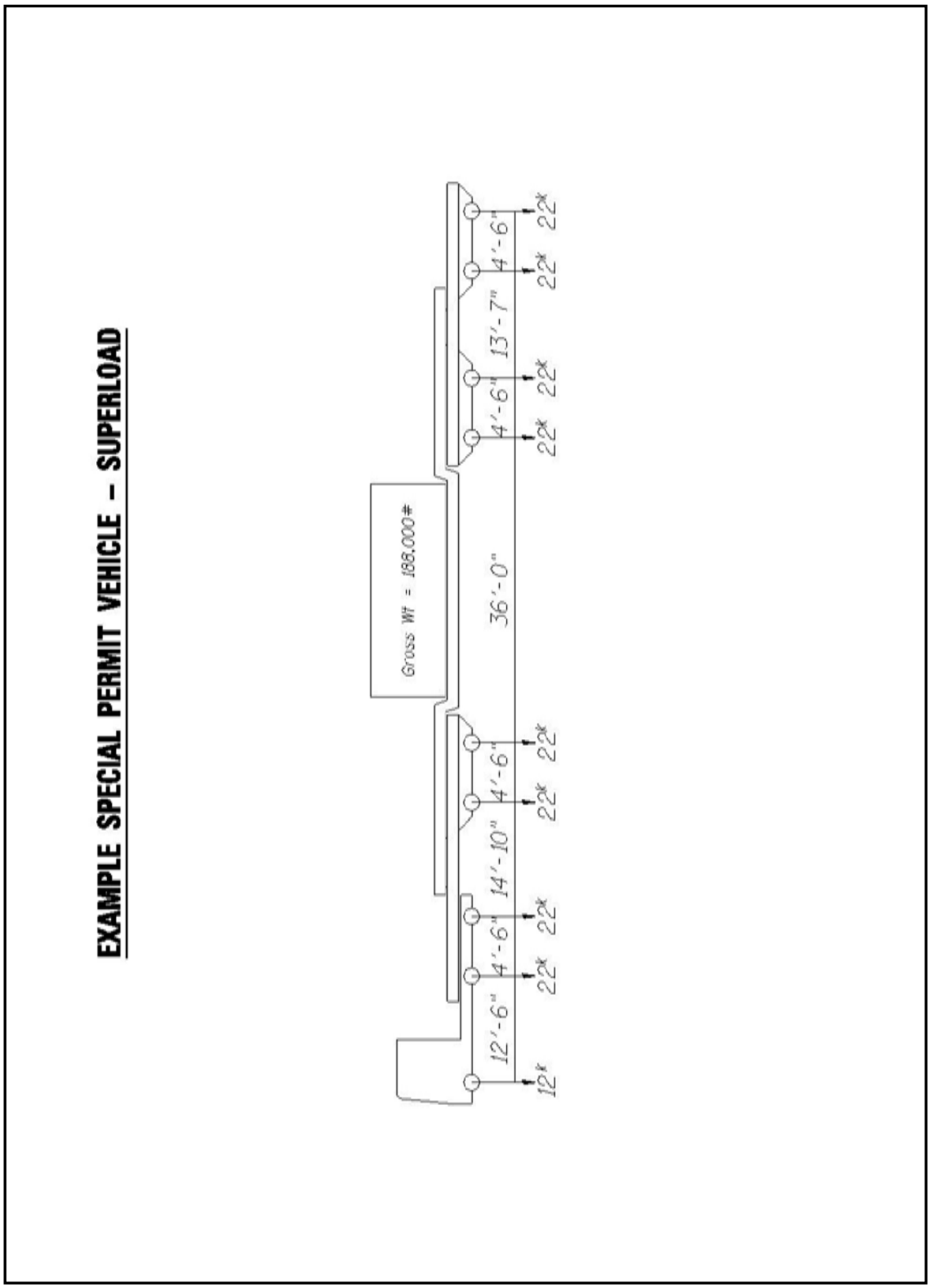

Figure 4.5.4.2-2

Unless the overweight vehicle is exceptional in size and weight, and verification of structural conditions is essential for establishing the accuracy of load rating computations, a permit load evaluation does not normally require a special inspection of the bridge.

4.5.6.1.2 Method of Analysis

A Permit Load Rating is the basis for determining the safe load-carrying capacity of a bridge for routine and special overweight vehicle permits. The analysis is performed in accordance with the MBE utilizing the AASHTO specifications most suited for determining a safe load-carrying capacity that will allow full utilization of the bridge while preventing damage to the bridge.

There are three acceptable rating methods presented in the MBE for performing a Permit Load Rating. Those methods are:

- Allowable Stress Rating (ASR)
- Load Factor Rating (LFR)
- Load and Resistance Factor Rating (LRFR)

These are the same methods described in Section 4.3 of this Manual for determining Design Load Ratings and in Section 4.4 for Legal Load Ratings.

According to the MBE, Section 6.1, “No preference is placed on any rating method.” However, it has been the policy of the BBS to perform Permit Load Ratings using the LFR method, unless the bridge material or type precludes its use. The ASR or LRFR methods may also be used for Permit Load Ratings, if the use of either method is more appropriate for the bridge being analyzed or more suitable for allowing the bridge to be utilized to the fullest.

Structural member flexural and shear strength are considered in the analysis for a Permit Load Rating. When performing a LFR permit evaluation, serviceability issues such as overload, fatigue and concrete cracking are not typically considered. In contrast with LFD design analysis, which must employ conservative assumptions due to the likelihood of occasional loads that exceed the designated design loads, permit vehicle loading is known with a very high degree of certainty and is not a highly repetitive load.

In a LRFR analysis, consideration of Service limit states, which is optional according to MBE Table 6A.4.2.2-1, is not typically performed. Exceptions to this are for permit analysis of concrete segmental bridges, under MBE 6A.5.11.5.2, and steel structures, under MBE 6A.6.4.2.

4.5.6.1.2.1 Allowable Stress Rating (ASR) Method

The ASR Method is based on Allowable Stress Design as specified in the AASHTO Standard Specifications for Highway Bridges. Bridges with primary structural components composed of timber are usually analyzed by this method, since there is no AASHTO LFD specification for structural timber. The operating stress level is typically used to determine bridge load-carrying capacity for permit loads analyzed by the ASR Method, unless the engineer determines a lesser stress level is more appropriate in consideration of bridge condition, traffic characteristics or other site factors.

4.5.6.1.2.2 *Load Factor Rating (LFR) Method*

The LFR Method is based on Load Factor Design as specified in the AASHTO Standard Specifications for Highway Bridges. When using the LFR method, it is IDOT BBS policy to determine bridge load-carrying capacity based on the operating stress level, which is the maximum to which a member may be safely loaded under the LFR specifications without being subjected to levels of damaging stress, assuming infrequent or occasional occurrence. However, the engineer may determine a lesser stress level is more appropriate in consideration of bridge condition, traffic characteristics or other site factors.

4.5.6.1.2.3 Load and Resistance Factor Rating (LRFR) Method

The LRFR Method is based on Load and Resistance Factor Design (LRFD) as specified in the AASHTO LRFD Bridge Design Specifications. This method is used for Permit Load Rating on a selective basis, when the use of the LRFR method provides a means for increasing the utilization of the bridge in comparison to the LFR and ASR methods. The discussion of the LRFR Method in Section 4.4.3.2.3 also applies to its use for Permit Load Rating analysis.

4.5.6.2 Special Permit Restrictions

The structural analysis performed to evaluate the load effect of an overweight permit vehicle uses live load distribution factors that assume multi-lane occupancy if the bridge carries more than one lane. The analysis also assumes a dynamic impact for live load in accordance with the applicable AASHTO design specifications. When, under these assumptions, the evaluation indicates the overweight permit vehicle will overstress the structure, special restrictions can be applied to the vehicle movement over the bridge that reduce the load effects of the vehicle on the structural members.

4.5.6.2.1 *One Lane Loaded*

When a permit vehicle, assuming multi-lane loading and full impact, causes a structural member to be overstressed, the first option is to re-analyze, assuming only one lane loaded. This is done by reducing the Live-Load Distribution Factor (LLDF) according to the applicable AASHTO design specifications. If the Permit Load Rating, based on the permit load being the only heavy vehicle crossing the bridge, indicates the bridge load-carrying capacity is sufficient to allow safe passage of the permit load, a permit may be issued with specified restrictions. This loading restriction is commonly specified as, “One lane loaded, at least 300’ between nearest vehicle.”

4.5.6.2.2 *Load Position*

A Permit Load Rating may indicate an overweight vehicle can only cross a bridge with its axles placed in specific locations relative to the main load-carrying members of the superstructure. It is not unusual for a permit to specify that an extremely heavy vehicle must straddle the centerline of the roadway while crossing a structure. This positioning contributes to the load being more evenly distributed to load-carrying members and reduces the load effect on exterior beam or girders. Another method occasionally used is “crabbing”, which utilizes an articulating tractor/trailer that allows axles to be placed in a manner that will spread the vehicle weight over a greater number of beam lines.

4.5.6.2.3 *Reduced Impact Loading*

If a Special Permit Load Rating, assuming full dynamic impact, fails to produce results that allow for permit approval, restrictions may be imposed to reduce the load effect due to dynamic impact. Depending on the AASHTO specifications used, vehicle load effects are increased 20% to 33% to account for the dynamic nature of the loading. Impact loading may be entirely removed by a "Crawl-speed" restriction, which requires a vehicular speed of 5 mph or less. If that is not practical, e.g., on Interstate highways, it is IDOT practice to limit the increase in vehicle loads for dynamic impact to 10% and specify "Reduced-speed" operation of 35 mph when there is a smooth riding surface at approaches, bridge deck, and expansion joints. To ensure compliance with the permit restriction a police escort or other means of supervision for the bridge crossing should be specified within the issued permit.

4.5.6.2.4 Escort and Traffic Control

When special restrictions are specified within a permit issued for an overweight vehicle, supervision is typically necessary to ensure compliance with the restrictions. The supervision may be in the form of a police escort, on site observations by agency personnel or traffic control provided by the vehicle operator. Law enforcement ensures the special legal requirements of the permit are adhered to. Traffic control may be necessary to insure traffic on bridges is restricted and to provide protection for traffic and the permit vehicle, especially if its speed must be reduced significantly below normal highway speeds.

4.5.6.2.5 *Compliance with Posted Weight Limits*

Regardless of the results of a Permit Load Rating, a permit may not be issued allowing an overweight vehicle or any other vehicle to cross a bridge if the proposed vehicle has a gross weight and configuration that does not comply with posted weight limit established for the bridge.

4.5.6.3 *Temporary Measures*

When the Permit Load Rating analysis shows a proposed permit vehicle cannot be operated on a bridge, even with lane and speed (impact) restrictions, temporary measures may be utilized to allow for passage. The following are typical temporary measures:

- Spreading out the load – Accomplished by using mats made up of structural timbers, concrete or steel beams to distribute the wheel loads of the permit vehicle more evenly to additional superstructure members.
- Supplemental member support – The employment of struts or other means serving to alter the structural system thereby increasing capacity.
- Strengthening a member – Increase its cross-sectional area or buckling resistance.
- ”Bridging” over a bridge deck - Creating an additional structure spanning partly or completely over the existing deck greatly reducing loading on critical members.

The development and employment of temporary measures are the responsibility of the permit vehicle operator. An Illinois Licensed Structural Engineer retained by the permit vehicle operator must seal any plans and proposals for temporary measures that would allow passage of the vehicle over the bridge. As with other overweight permit proposals, those with temporary measures must be submitted to IDOT for approval prior to implementation.

4.6 Construction Load Ratings

4.6.1 *General*

Special Construction Loads are those which have the potential to cause load effects greater than provided for in the original bridge design. Highway and bridge construction activities often result in the application of substantial loads on existing and newly constructed bridges. Since the Special Construction Loads have the potential of causing member stresses greater than allowed for in the original design, they must be evaluated to ensure the safe load-carrying capacity of the structure is not exceeded. The loadings may consist of vehicles, equipment or materials, applied individually or in combination, which must be supported by the structure during construction. Examples of such loads include, but are not limited to, material transfer devices, earth-moving equipment, cranes and stockpiled materials. The unevaluated application and accumulation of Special Construction Loads can result in significant damage being caused to a bridge and, in the worst case scenario, structural failures. Movement of these Special Construction Loads shall be governed by Standard Specification 107.16 and Construction Memorandum No. 06-39.

Bridges affected by Special Construction Loads will be located within construction project limits. The structures may be required to carry normal traffic and Special Construction Loads simultaneously. When stage construction is used to replace an existing bridge, Special Construction Loads may be supported by a structure whose load-carrying capacity has been affected by partial removal or by incomplete construction. In-service bridges within construction project limits and located on Designated Truck Routes may also be subjected to Permit Loads, unless posted weight limits are established.

Since Special Construction Loads are typically associated with the means and methods chosen by a contractor during the implementation phase of a project, Construction Load Ratings are usually performed in response to a contractor's proposed method of bridge construction or structural removal. However, there are occasions when the need for Special Construction Loads is identified or specified by design staff during the project development phase and, on these occasions, a Construction Load Rating must be performed in conjunction with the project development to verify sufficient bridge load-

carrying capacity or to establish operational limitations for the anticipated Special Construction Load.

4.6.2 *Assignment of Responsibility*

Approval of bridges for Special Construction Loads is ultimately the prerogative of the bridge owner. A structural evaluation must be performed to determine whether such loads are acceptable. As with any structural evaluation, the Construction Load Rating must be performed under the direction of an Illinois Licensed Structural Engineer. When Construction Load Ratings are required to evaluate loadings associated with the means and methods of construction chosen by a contractor, it is the contractor's responsibility to obtain the services of a Structural Engineer to perform the rating. Computations and other supporting documentation for the analysis, which are submitted to the bridge owner, must be sealed by the responsible Structural Engineer.

4.6.2.1 *State Bridges*

Bridges owned by the Illinois Department of Transportation (IDOT) are analyzed for Special Construction Loads by the Bureau of Bridges and Structures (BBS) or for a Permit "C" (Construction Permit) as describe in IDOT Construction Memorandum 06-39. or during project implementation, requests for review of Special Construction Loads should be submitted to the IDOT District/Region office by the Contractor. The request for construction load review and approval is submitted to the BBS by the District/Region Bureau of Project Implementation. The information submitted must include a Construction Load Rating performed by or under the supervision of a licensed Illinois Structural Engineer. The Structural Engineer's seal and signature must be affixed to the submitted rating. During project development, requests for Construction Load Ratings should be submitted to the BBS by the District/Region Bureau of Project Development.

Timeliness is of great importance with the submittal of requests for approval of construction equipment analysis. In order to minimize delay to construction projects underway, at least ten (10) days should be allowed for the BBS to review or perform the bridge analyses.

The information required for the performance of a Construction Load Rating depends on the type of Special Construction Loads to be evaluated for travel across, operation on or placement on a bridge. In general, the location, magnitude and configuration of each load that will be applied to the bridge surface must be described in the approval request. More specifically, information required for analysis of Special Construction Loads is as follows:

- Wheeled vehicles that will travel across the bridge:
    - wheel or axle weights (empty and fully loaded)
    - track width and wheel spacing
    - axle spacing
    - vehicle specification sheet.
- Cranes, excavators and other equipment that will be operated on the bridge surface:
    - forces from outrigger pads and/or wheels under the expected pick loads
    - lateral and lengthwise spacing of outrigger pads
    - track width and wheel spacing
    - axle spacing
    - vehicle specification sheet.
- Stationary equipment or construction materials mixing equipment and stockpiles):
    - locations, dimensions and weight of equipment
    - maximum weight of stockpiled materials
    - locations and size of areas to be used for stockpiles

4.6.2.2 *Non-State Bridges*

The owner of a non-State bridge should require the construction contractor to provide documentation that a Construction Load Rating has been performed, prior to allowing Special Construction Loads on a bridge. The Construction Load Rating shall be performed under the direction of and sealed by an Illinois Licensed Structural Engineer.

Local Agency projects constructed using State, Federal or Motor Fuel Tax funds typically require coordination between IDOT and the Local Agency for construction supervision. When a Special Construction Load is to be applied to a structure requiring IDOT

construction oversight coordination, the contractor must provide a Construction Load Rating, sealed by and perform by or under the direction of an Illinois Licensed Structural Engineer, to the Local Agency providing the construction supervision. The Local Agency, in consultation with IDOT, may accept the Construction Load Rating as documentation that the bridge has sufficient load-carrying capacity to safely carry the Special Construction Load. If the Local Agency or IDOT believe the Special Construction Load is unusual in comparison to those typically employed during project implementation, the Construction Load Rating should be forwarded to the Engineer of Record for review and comment prior to allowing the Special Construction Load access to the structure. The Engineer of Record is the Illinois Licensed Structural Engineer who has signed and sealed the bridge design plans for the structure being built.

4.6.3 *Evaluation of Construction Loads*

Construction Load Ratings may be performed in a manner similar to Permit Load Ratings, in that the Construction Load Rating is conducted to determine a safe load-carrying capacity in regard to a bridge's ability to carry a relatively heavy and well defined load. The guidance provided for evaluating Special Permits by the American Association of State Highway and Transportation Officials (AASHTO) Manual for Bridge Evaluation (MBE) is appropriate for evaluating Special Construction Loads.

The proposal for a Special Construction Load on a bridge should be submitted to the bridge owner as early as practicable, to provide adequate time for the review or performance of a Construction Load Rating and to identify structural limitation that will affect construction activities. The timing of the evaluation depends on when it is known that the application of the loading will be required. There are two potential periods for identifying the need for a Special Construction Load prior to the start of construction activities, during project development or immediately following contract award.

4.6.3.1 *Project Development Stage*

A request for structural evaluation of a bridge must be made during the early design phase of a project when the specifics of a Special Construction Loading are known at that time. This may occur when a specific vehicle or other special loading will be required or desired as a result of the specifications for the proposed construction. The

project designer shall submit the required information for analysis. The results of the analysis will allow the designer to make necessary decisions relative to project development early in the process.

A very common and notable example of a Special Construction Load known early in the project development stage is a specific Material Transfer Device (MTD). Frequently, roadway overlay projects require the use of a MTD with specific performance requirements. These specifications are in the IDOT "Special Provision for Material Transfer Device", and IDOT has established the weight, axle loads, axle spacing and vehicle dimensions for a MTD meeting the requirement of the special provision. Traveling empty, a MTD complying with the specification has a load effect well in excess of that caused by vehicles used for bridge design. Since, at the time of project development, it is known this specified MTD will be used, a Construction Load Rating must be performed for all bridges to be crossed by the MTD.

4.6.3.2 *Construction Stage*

Although the various kinds of equipment used for typical road and bridge construction are generally known, each contractor uses specific methods of construction dependent on available equipment, past experience and general preferences. Therefore, for most projects, the need for a Construction Load Rating cannot be identified in the project development stage and the information required to perform a rating is not available until after the construction contract has been awarded.

At the time of the pre-construction meeting, the contractor should know the specifics of any Special Construction Load expected for the project, and the contractor should provide information in regard to the load and plans for retaining the services of an Illinois Licensed Structural Engineer to perform and certify a Construction Load Rating. Prior to placing Special Construction Loads on a bridge, the contractor must submit Construction Load Rating documentation sealed by the Structural Engineer responsible for the rating to IDOT or other applicable jurisdictional agency. After the contractor has received notification of the acceptance of the rating by IDOT or other agency, the Special Construction Load may be implemented.

It is understood that unforeseen circumstances may require the contractor to propose a Special Construction Load not anticipated prior to the commencement of the construction. As with Special Construction Load proposals made at the pre-construction meeting, the contractor will be required to retain the services of a Licensed Structural Engineer to perform the structural analysis. In such cases the contractor should allow at least ten (10) days for review and/or approval

In all cases, when a contractor proposed Special Construction Load is not essential, and an alternate method of construction can be utilized that will not require a Special Construction Load, the bridge owner is not obligated or compelled to approve the proposed load. This is the case even when the contractor has provided a Construction Load Rating certifying a bridge has adequate structural capacity to carry the proposed load.

4.6.3.3 *Factors Considered*

Various factors are considered by the engineer or are incorporated within the rating specifications for the determination of capacity for a given Special Construction Load. Among these factors are:

- Structural analysis in accordance with applicable AASHTO specifications
- Structure condition
- Availability of design or as-built plans
- Traffic volume and characteristics (if open to traffic)
- Degree of redundancy of main load carrying members
- Reliability and extent of inspection information
- Availability of construction documentation

4.6.3.4 *Method of Analysis*

Construction Load Rating is the basis for determining the safe load capacity of a bridge with respect to Special Construction Loads. The analysis is performed in accordance with the AASHTO specifications most suited for determining a safe load-carrying capacity that will allow full utilization of the bridge while preventing damage to the bridge.

There are three acceptable basic rating methods for performing a Special Construction Loading analysis, as follows:

- Allowable Stress Rating (ASR)
- Load Factor Rating (LFR)
- Load Resistance Factor Rating (LRFR)

These are the same methods described in Section 4.3 of this Manual for determining Design Load Ratings.

According to the MBE, Section 6.1, "No preference is placed on any rating method." It has been the policy of the BBS to perform load ratings using the LFR method unless the bridge material or type precludes it, in which case the ASR method has been used. The ASR or LRFR methods may also be used for Special Construction Loading analysis if desired or as an alternate when it allows the bridge to be utilized to the fullest.

4.6.3.4.1 *Allowable Stress Rating (ASR) Method*

The ASR Method is based on Allowable Stress Design as specified in the AASHTO Standard Specifications for Highway Bridges. Bridges with primary structural components composed of timber are usually analyzed by this method since there is no AASHTO LFD specification for structural timber. The operating stress level is typically used to determine bridge load-carrying capacity for construction loads analyzed by the ASR Method, unless the engineer determines a lesser stress level is more appropriate in consideration of bridge condition or other site factors

4.6.3.4.2 *Load Factor Rating (LFR) Method*

The LFR Method is based on Load Factor Design as specified in the AASHTO Standard Specifications for Highway Bridges. When using the LFR method, it is IDOT BBS policy to determine bridge load-carrying capacity based on the operating stress level, which is the maximum to which a member may be safely loaded under the LFR specifications without being subjected to levels of damaging stress, assuming infrequent or occasional occurrence. However, the engineer may determine a lesser stress level is more

appropriate in consideration of bridge condition or other site factors. Design serviceability limits are not considered since, in contrast with design, Special Construction Loads are known with a very high degree of certainty and repetition of loading is to a factor in relation to the life of the bridge.

4.6.3.4.3 *Load and Resistance Factor Rating (LRFR) Method*

The LRFR Method is based on Load and Resistance Factor Design (LRFD) as specified in the AASHTO LRFD Bridge Design Specifications. The cases where LRFR might be used for a construction load analysis would be to maximize overall bridge structural capacity in comparison to LFR and ASR or for a bridge originally designed by the LRFD method. The discussion of the LRFR Method in Section 4.4.3.2.3 also applies to its use for Construction Load Rating.

4.6.4 *Precautionary Measures*

Evaluation and approval of Special Construction Loads may require measures to protect elements from localized damage, to distribute concentrated load points, to provide for additional lateral stability, etc. Examples of this are as follows:

- The placement of wooden planks on a bridge deck in order to protect it from damage by the steel cleats of a tracked vehicle.
- The placement of layers of heavy timbers under crane outriggers to ensure the distribution of concentrated loads to multiple beams or an enlarged area of a bridge deck.

Often, when bridges are being replaced or rehabilitated, the condition of the existing bridge will preclude any consideration of Special Construction Loads, unless measures are taken to strengthen deficient members.

4.7 Special Hauling Vehicles

4.7.1. General

Special Hauling Vehicles (SHV) are trucks allowed to freely operate on public highways that may cause load effects equal to or in excess of those caused by the Illinois Posting Vehicles described in Section 4.4 of this Manual for performing Legal Load Ratings. Section C6A.4.4.2.1b of the American Association of State Highway and Transportation Officials (AASHTO) Manual for Bridge Evaluation (MBE) provides the following description for SHV:

> Special hauling vehicles are legal single-unit short-wheelbase multi-axle trucks commonly used in the construction, waste management, bulk cargo and commodities hauling industries.

When it is known that SHV are operating in the vicinity of a structure, it must be verified that the vehicle configurations used for the Legal Load Rating produce load effects comparable to those of the SHV operating in the vicinity of the evaluated bridge. Although the description provided by AASHTO for SHV specifies the truck is configured as a single-unit vehicle, there are instances in Illinois that allow combination-vehicles to operate as SHV.

Typically, SHV do not comply with the Federal Bridge Formula, which was described in Section 4.1 of this Manual. However, as the trucking industry has continued to develop single-unit vehicles capable of carrying maximum payloads over shorter wheelbases, SHV have been introduced in certain areas of the United States that meet the Federal Bridge Formula and have load effects in excess of those caused by the single-unit vehicles commonly used for Legal Load Ratings.

Chapter 15 of the Illinois Vehicle Code (625 ILCS 5/15) requires specific truck configurations that do not meet the Federal Bridge Formula to be officially registered in Illinois as SHV. The following are examples of SHV registered under the Illinois Vehicle Code:

- Certain 3-axle single-unit vehicles with heavier tandem axle loads.

- Certain 4-axle vehicles used exclusively for mixing and transporting concrete.
- Certain 5-axle combination-vehicles having a gross vehicle weight of 72,000 pounds (the Type 3-S2 Illinois Posting Vehicle described in Section 4.4 of the Manual is representative of such a configuration).

The Illinois Vehicle Code also provides exemptions to Federal Bridge Formula compliance for vehicles operating to provide specific services or to haul specific materials. Although these trucks are not registered in Illinois as SHV, their load effect is essentially the same as a SHV. Examples of these unregistered SHV are as follows:

- Vehicles operated by Public Utilities when transporting equipment required for emergency repair services
- Single-unit vehicles used exclusively for the collection of rendering materials
- Tow trucks in combination with disabled single-unit vehicles or combination vehicles
- Single-unit vehicles used exclusively for garbage, refuse or recycling operations

4.7.2. Illinois Common Special Hauling Vehicles

A common Special Hauling Vehicle freely operating on public highways in Illinois that does not comply with the Federal Bridge Formula is described in 625 ILCS 5/15-111(a)(10) as follows:

> "*Combinations of vehicles, registered as Special Hauling Vehicles that include a semitrailer manufactured prior to or in the model year of 2014, and registered in Illinois prior to January 1, 2015, having 5 axles with a distance of 42 feet or less between extreme axles, may not exceed the following maximum weights: 20,000 pounds on a single axle; 34,000 pounds on a tandem axle; and 72,000 pounds gross weight. This combination of vehicles is not subject to the bridge formula. For all those combinations of vehicles that include a semitrailer manufactured after the effective date of P.A. 92-0417, the overall distance between the first and last axles of the 2 sets of tandems must be 18 feet 6 inches or more. Any combination of vehicles that has had its cargo container replaced in its entirety after December 31, 2014 may not exceed the weights allowed by the bridge formula.*"

The load effect caused by the above described 5-axle tractor and semi-trailer is considerably in excess of that caused by a 5-axle combination vehicle configured in accordance with the Federal Bridge Formula. In deference to their ability to cause increased load effects, these SHV are commonly referred to as "bombers". The Type 3-S2 Illinois Posting Vehicle described in Section 4.4 of this Manual is representative of these SHV, which are the only SHV allowed to freely travel on Interstate Highways without the performance of a Permit Load Rating.

4.7.3. AASHTO Notional Load

Manufactures continuously strive to provide the trucking industry with efficient single-unit vehicles capable of transporting increased payloads with trucks having shortened wheelbases. Truck configurations have been indentified within the United States capable of causing unexpectedly large load effects for a single-unit vehicle that complies with the Federal Bridge Formula. In recognition of this trend, AASHTO has provided a Notional Rating Load (NRL) in the MBE that depicts an 8-axle single-unit vehicle with an 80,000 pound gross vehicle weight. Figure 4.7.3-1 provides an illustration of the NRL. This Manual is considering the NRL to be a Special Hauling Vehicle, since the NRL represents an unanticipated vehicle configuration that complies with the Federal Bridge Formula while causing load effects the Federal Bridge Formula was intended to prevent. It should be noted the NRL does not comply with the Illinois Vehicle Code. In order to comply with the designated axle configuration, the GVW would have to be limited to 62,000 pounds. Therefore, an individual permit would be required for it to operate on Illinois roads and bridges.

Since the NRL configuration is not allowed by the Illinois Vehicle Code, vehicles similar to the NRL have not been identified as operating within the State of Illinois. However, when performing a Legal Load Rating, the engineer should be aware such loads are known to exist nationwide, and the NRL should be utilized in the bridge rating if vehicles similar to the NRL are known to be operating in the vicinity of the bridge.

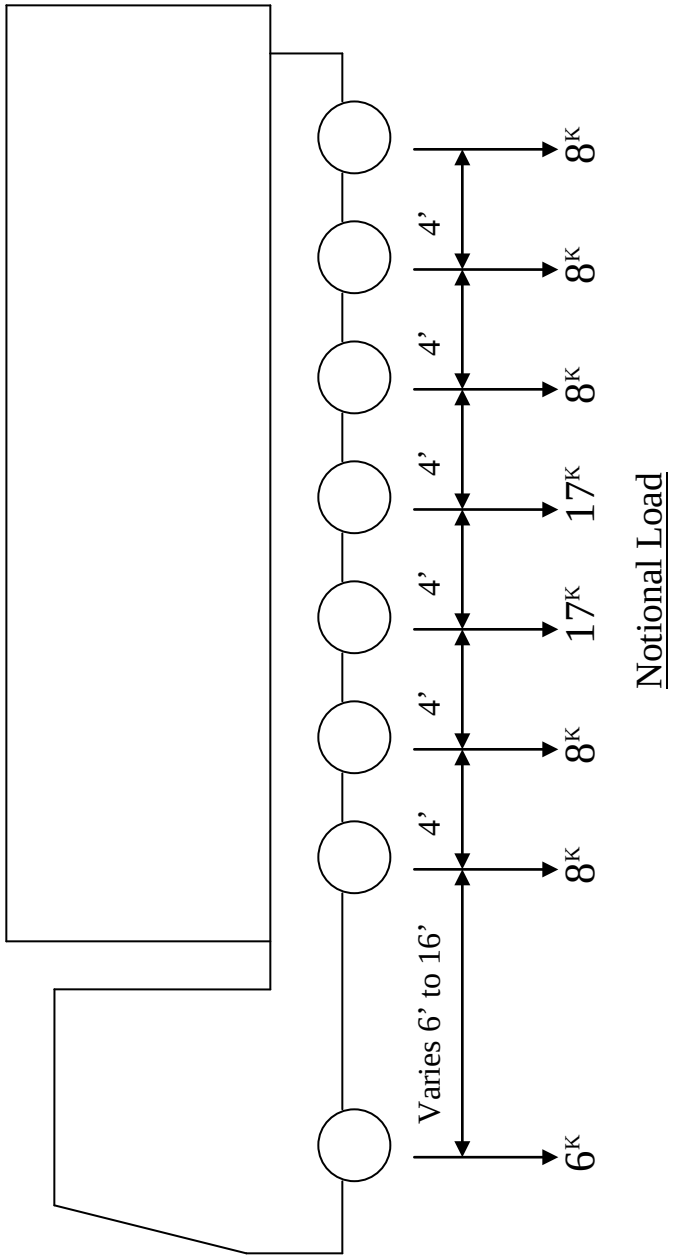

AASHTO NOTIONAL RATING LOAD

Figure 4.7.3-1

4.8 Quality Control and Quality Assurance

4.8.1 General

Quality Control and Quality Assurance (QC/QA) are established procedures used to ensure the Bridge Load Ratings are accomplished in a manner that provides correct and appropriate load-carrying capacities. QC/QA are defined as follows:

Quality Control (QC): Established procedures used for ensuring the accuracy of rating calculations, detecting and correcting analytical errors, reviewing existing structure information for correctness and verifying that rating specifications, applied loads and assumptions are appropriate for the analyzed load-carrying members.

Quality Assurance (QA): Established procedures used for verifying that Quality Control procedures have been followed and are effective for ensuring completed ratings are correct and appropriate.

QC procedures must ensure:

- Bridge Load Ratings are certified by an Illinois Licensed Structural Engineer as correct and appropriate.
- All Bridge Load Ratings are accomplished by utilizing the services of an individual rater and checker.
- The qualifications of staff performing and checking Bridge Load Ratings are appropriate.
- Documentation is maintained to record calculations, rating assumptions, rating specifications used and the identity of the rater and checker.

QA procedures must ensure:

- All established QC procedures have been followed, especially certification of the Bridge Load Rating by an Illinois Licensed Structural Engineer.
- Load-carrying capacities derived from the performance of the Bridge Load Rating are appropriate for the rated bridge in consideration of the structure type and condition.

- The rating has been certified and documented using the Structure Load Rating Summary, Form BBS 2795, included on the IDOT website.

4.8.2 Staff Qualifications

QC/QA procedures for ensuring Bridge Load Ratings are performed in a correct and appropriate manner must include contributions from an individual rater, checker and reviewer. All individuals must be knowledgeable in regard to the application of the bridge load rating specifications provided by the American Association of State Highway and Transportation Officials (AASHTO) Manual for Bridge Evaluation (MBE). Each individual must have engineering knowledge, education, training and experience relative to the design or structural evaluation of the specific bridge type being rated, and they should be familiar with the application of AASHTO bridge load rating specifications. At least one of the individuals must be an Illinois Licensed Structural Engineer and act as rater, checker or reviewer.

4.8.2.1 Rater

The rater is the individual directly responsible for the performance of analyses and associated calculations to determine the safe capacity of the main load-carrying members of a bridge. This individual must possess the knowledge to apply the appropriate rating specifications. The actions of the rater contribute to the QC for the Bridge Load Rating.

4.8.2.2 Checker

The checker is the individual responsible for performing a full and in-depth technical review of the rater's load rating calculations, assumptions and application of specifications. The actions of the checker contribute to the QC for the Bridge Load Rating.

4.8.2.3 Reviewer

The reviewer is the individual providing oversight to ensure the QC procedures were utilized during the Bridge Load Rating and to verify that they were sufficient for

determining correct and appropriate safe load-carrying capacities for the main structural members. The reviewer should be an Illinois Licensed Structural Engineer or Licensed Professional Engineer having experience relative to the design and function of the rated bridge. The actions of the reviewer contribute to the QA for the Bridge Load Rating.

4.8.2.4 Engineer of Record

The engineer of record is the Illinois Licensed Structural Engineer who performed the Bridge Load Rating or directly supervised personnel performing the rating. Since the engineer of record is certifying the Bridge Load Rating to be correct and appropriate, it is highly desirable that the engineer of record be included in the rating process as the rater, checker or reviewer. Structure Load Rating Summary form BBS 2795 provides a means for identifying the engineer of record.

4.8.3 Controlling Member

Section 4.2 of this Manual provides information related to the selection of main load-carrying members for various bridge types. When performing a Bridge Load Rating, it is essential to identify all main load-carrying members that must be rated and to determine which of them has the least capacity to carry the live load used in the analysis. This main load-carrying member with the least capacity for carrying live load is the Controlling Member.

4.8.4 Rating Documentation

The Structure Load Rating Summary (SLRS) (Form BBS 2795) provides a means for documenting the results of a Bridge Load Rating. The form is not intended for documenting every finding of the load rating. The purpose of the form is to provide documentation that a Bridge Load Rating was performed and to briefly summarize its findings. This form should be kept in the individual bridge file maintained by the jurisdictional agency for each owned structure, and must be submitted to IDOT by Local Agencies requesting concurrence with Bridge Load Ratings performed by Consulting Engineers. Although IDOT does not require that all rating computations be submitted with the SLRS Form 2795, rating computations should be maintained for future reference by the engineering staff responsible for the Bridge Load Rating.

Appendix

Section 1 ***Repairs*** ***A1***

Section 3 ***Inspection*** ***A3***

Code of Federal Regulations 23 CFR 650(C) – NBIS *A3-1*

Web Resources *A3-2*

Definitions *A3-3*

Acronyms *A3-4*

FCM Inspection Plan Template *A3-5*

AASHTO Fatigue Categories Tables *A3-6*

AASHTO/AWS D1.5 Bridge Welding Code – Section 6.7.6.2

Magnetic Particle Yoke Lifting Requirements *A3-7*

IDOT Major Structures *A3-8*

BridgeWatch User Manual *A3-9*

Bridge File Organization and Checklist *A3-10*

FHWA 23 Metrics Guidelines *A3-11*

Section 4 ***Ratings and Permits*** ***A4***

FHWA Policy Memorandum:"Bridge Load Ratings for the National Bridge Inventory" *A4-1*

Guidelines for Estimating Strand Loss in PPC Deck Beam Bridges *A4-2*

Rating and Posting for Non-analytically Evaluated Bridges *A4-3*

Modeling Bridges with AASTHOWare Bridge Rating (Virtis®) *A4-4*

Appendix

A3-1 Code of Federal Regulations 23 CFR 650(C) – NBIS

Code of Federal Regulations (CFR)

Title 23: Highways
PART 650—BRIDGES, STRUCTURES, AND HYDRAULICS

Subpart C—National Bridge Inspection Standards

Contents

§ 650.301 Purpose.
§ 650.303 Applicability.
§ 650.305 Definitions.
§ 650.307 Bridge inspection organization.
§ 650.309 Qualifications of personnel.
§ 650.311 Inspection frequency.
§ 650.313 Inspection procedures.
§ 650.315 Inventory.
§ 650.317 Reference manuals.

SOURCE: 69 FR 74436, Dec. 14, 2004, unless otherwise noted.

§ 650.301 Purpose.

This subpart sets the national standards for the proper safety inspection and evaluation of all highway bridges in accordance with 23 U.S.C. 151.

§ 650.303 Applicability.

The National Bridge Inspection Standards (NBIS) in this subpart apply to all structures defined as highway bridges located on all public roads.

§ 650.305 Definitions.

Terms used in this subpart are defined as follows:

American Association of State Highway and Transportation Officials (AASHTO) Manual . "The Manual for Bridge Evaluation," First Edition, 2008, published by the American Association of State Highway and Transportation Officials (incorporated by reference, *see* § 650.317).

Bridge. A structure including supports erected over a depression or an obstruction, such as water, highway, or railway, and having a track or passageway for carrying traffic or other moving loads, and having an opening measured along the center of the roadway of more than 20 feet between undercopings of abutments or spring lines of arches, or extreme ends of openings for multiple boxes; it may also include multiple pipes, where the clear distance between openings is less than half of the smaller contiguous opening.

Bridge inspection experience. Active participation in bridge inspections in accordance with the NBIS, in either a field inspection, supervisory, or management role. A combination of bridge design, bridge maintenance, bridge construction and bridge inspection experience, with the predominant amount in bridge inspection, is acceptable.

Bridge inspection refresher training. The National Highway Institute "Bridge Inspection Refresher Training Course" [1] or other State, local, or federally developed instruction aimed to improve quality of inspections, introduce new techniques, and maintain the consistency of the inspection program.

[1] The National Highway Institute training may be found at the following URL: *http://www.nhi.fhwa.dot.gov./*

Bridge Inspector's Reference Manual (BIRM). A comprehensive FHWA manual on programs, procedures and techniques for inspecting and evaluating a variety of in-service highway bridges. This manual may be purchased from the U.S. Government Printing Office, Washington, DC 20402 and from National Technical Information Service, Springfield, Virginia 22161, and is available at the following URL: *http://www.fhwa.dot.gov/bridge/bripub.htm.*

Complex bridge . Movable, suspension, cable stayed, and other bridges with unusual characteristics.

Comprehensive bridge inspection training. Training that covers all aspects of bridge inspection and enables inspectors to relate conditions observed on a bridge to established criteria (see the Bridge Inspector's Reference Manual for the recommended material to be covered in a comprehensive training course).

Critical finding. A structural or safety related deficiency that requires immediate follow-up inspection or action.

Damage inspection. This is an unscheduled inspection to assess structural damage resulting from environmental factors or human actions.

Fracture critical member (FCM). A steel member in tension, or with a tension element, whose failure would probably cause a portion of or the entire bridge to collapse.

Fracture critical member inspection. A hands-on inspection of a fracture critical member or member components that may include visual and other nondestructive evaluation.

Hands-on. Inspection within arms length of the component. Inspection uses visual techniques that may be supplemented by nondestructive testing.

Highway. The term "highway" is defined in 23 U.S.C. 101(a)(11).

In-depth inspection. A close-up, inspection of one or more members above or below the water level to identify any deficiencies not readily detectable using routine inspection procedures; hands-on inspection may be necessary at some locations.

Initial inspection. The first inspection of a bridge as it becomes a part of the bridge file to provide all Structure Inventory and Appraisal (SI&A) data and other relevant data and to determine baseline structural conditions.

Legal load. The maximum legal load for each vehicle configuration permitted by law for the State in which the bridge is located.

Load rating. The determination of the live load carrying capacity of a bridge using bridge plans and supplemented by information gathered from a field inspection.

National Institute for Certification in Engineering Technologies (NICET). The NICET provides nationally applicable voluntary certification programs covering several broad engineering technology fields and a number of specialized subfields. For information on the NICET program certification contact: National Institute for Certification in Engineering Technologies, 1420 King Street, Alexandria, VA 22314-2794.

Operating rating. The maximum permissible live load to which the structure may be subjected for the load configuration used in the rating.

Professional engineer (PE). An individual, who has fulfilled education and experience requirements and passed rigorous exams that, under State licensure laws, permits them to offer engineering services directly to the public. Engineering licensure laws vary from State to State, but, in general, to become a PE an individual must be a graduate of an engineering program accredited by the Accreditation Board for Engineering and Technology, pass the Fundamentals of Engineering exam, gain four years of experience working under a PE, and pass the Principles of Practice of Engineering exam.

Program manager. The individual in charge of the program, that has been assigned or delegated the duties and responsibilities for bridge inspection, reporting, and inventory. The program manager provides overall leadership and is available to inspection team leaders to provide guidance.

Public road. The term “public road” is defined in 23 U.S.C. 101(a)(27).

Quality assurance (QA). The use of sampling and other measures to assure the adequacy of quality control procedures in order to verify or measure the quality level of the entire bridge inspection and load rating program.

Quality control (QC). Procedures that are intended to maintain the quality of a bridge inspection and load rating at or above a specified level.

Routine inspection. Regularly scheduled inspection consisting of observations and/or measurements needed to determine the physical and functional condition of the bridge, to identify any changes from initial or previously recorded conditions, and to ensure that the structure continues to satisfy present service requirements.

Routine permit load. A live load, which has a gross weight, axle weight or distance between axles not conforming with State statutes for legally configured vehicles,

authorized for unlimited trips over an extended period of time to move alongside other heavy vehicles on a regular basis.

Scour. Erosion of streambed or bank material due to flowing water; often considered as being localized around piers and abutments of bridges.

Scour critical bridge. A bridge with a foundation element that has been determined to be unstable for the observed or evaluated scour condition.

Special inspection. An inspection scheduled at the discretion of the bridge owner, used to monitor a particular known or suspected deficiency.

State transportation department. The term “State transportation department” is defined in 23 U.S.C. 101(a)(34).

Team leader. Individual in charge of an inspection team responsible for planning, preparing, and performing field inspection of the bridge.

Underwater diver bridge inspection training. Training that covers all aspects of underwater bridge inspection and enables inspectors to relate the conditions of underwater bridge elements to established criteria (see the Bridge Inspector's Reference Manual section on underwater inspection for the recommended material to be covered in an underwater diver bridge inspection training course).

Underwater inspection. Inspection of the underwater portion of a bridge substructure and the surrounding channel, which cannot be inspected visually at low water by wading or probing, generally requiring diving or other appropriate techniques.

[69 FR 74436, Dec. 14, 2004, as amended at 74 FR 68379, Dec. 24, 2009]

§ 650.307 Bridge inspection organization.

(a) Each State transportation department must inspect, or cause to be inspected, all highway bridges located on public roads that are fully or partially located within the State's boundaries, except for bridges that are owned by Federal agencies.

(b) Federal agencies must inspect, or cause to be inspected, all highway bridges located on public roads that are fully or partially located within the respective agency responsibility or jurisdiction.

(c) Each State transportation department or Federal agency must include a bridge inspection organization that is responsible for the following:

(1) Statewide or Federal agencywide bridge inspection policies and procedures, quality assurance and quality control, and preparation and maintenance of a bridge inventory.

(2) Bridge inspections, reports, load ratings and other requirements of these standards.

(d) Functions identified in paragraphs (c)(1) and (2) of this section may be delegated, but such delegation does not relieve the State transportation department or Federal agency of any of its responsibilities under this subpart.

(e) The State transportation department or Federal agency bridge inspection organization must have a program manager with the qualifications defined in § 650.309(a), who has been delegated responsibility for paragraphs (c)(1) and (2) of this section.

§ 650.309 Qualifications of personnel.

(a) A program manager must, at a minimum:

(1) Be a registered professional engineer, or have ten years bridge inspection experience; and

(2) Successfully complete a Federal Highway Administration (FHWA) approved comprehensive bridge inspection training course.

(b) There are five ways to qualify as a team leader. A team leader must, at a minimum:

(1) Have the qualifications specified in paragraph (a) of this section; or

(2) Have five years bridge inspection experience and have successfully completed an FHWA approved comprehensive bridge inspection training course; or

(3) Be certified as a Level III or IV Bridge Safety Inspector under the National Society of Professional Engineer's program for National Certification in Engineering Technologies (NICET) and have successfully completed an FHWA approved comprehensive bridge inspection training course, or

(4) Have all of the following:

(i) A bachelor's degree in engineering from a college or university accredited by or determined as substantially equivalent by the Accreditation Board for Engineering and Technology;

(ii) Successfully passed the National Council of Examiners for Engineering and Surveying Fundamentals of Engineering examination;

(iii) Two years of bridge inspection experience; and

(iv) Successfully completed an FHWA approved comprehensive bridge inspection training course, or

(5) Have all of the following:

(i) An associate's degree in engineering or engineering technology from a college or university accredited by or determined as substantially equivalent by the Accreditation Board for Engineering and Technology;

(ii) Four years of bridge inspection experience; and

(iii) Successfully completed an FHWA approved comprehensive bridge inspection training course.

(c) The individual charged with the overall responsibility for load rating bridges must be a registered professional engineer.

(d) An underwater bridge inspection diver must complete an FHWA approved comprehensive bridge inspection training course or other FHWA approved underwater diver bridge inspection training course.

§ 650.311 Inspection frequency.

(a) *Routine inspections.* (1) Inspect each bridge at regular intervals not to exceed twenty-four months.

(2) Certain bridges require inspection at less than twenty-four-month intervals. Establish criteria to determine the level and frequency to which these bridges are inspected considering such factors as age, traffic characteristics, and known deficiencies.

(3) Certain bridges may be inspected at greater than twenty-four month intervals, not to exceed forty-eight-months, with written FHWA approval. This may be appropriate when past inspection findings and analysis justifies the increased inspection interval.

(b) *Underwater inspections.* (1) Inspect underwater structural elements at regular intervals not to exceed sixty months.

(2) Certain underwater structural elements require inspection at less than sixty-month intervals. Establish criteria to determine the level and frequency to which these members are inspected considering such factors as construction material, environment, age, scour characteristics, condition rating from past inspections and known deficiencies.

(3) Certain underwater structural elements may be inspected at greater than sixty-month intervals, not to exceed seventy-two months, with written FHWA approval. This may be appropriate when past inspection findings and analysis justifies the increased inspection interval.

(c) *Fracture critical member (FCM) inspections.* (1) Inspect FCMs at intervals not to exceed twenty-four months.

(2) Certain FCMs require inspection at less than twenty-four-month intervals. Establish criteria to determine the level and frequency to which these members are inspected considering such factors as age, traffic characteristics, and known deficiencies.

(d) Damage, in-depth, and special inspections. Establish criteria to determine the level and frequency of these inspections.

§ 650.313 Inspection procedures.

(a) Inspect each bridge in accordance with the inspection procedures in the AASHTO Manual (incorporated by reference, *see* § 650.317).

(b) Provide at least one team leader, who meets the minimum qualifications stated in § 650.309, at the bridge at all times during each initial, routine, in-depth, fracture critical member and underwater inspection.

(c) Rate each bridge as to its safe load-carrying capacity in accordance with the AASHTO Manual (incorporated by reference, *see* § 650.317). Post or restrict the bridge in accordance with the AASHTO Manual or in accordance with State law, when the maximum unrestricted legal loads or State routine permit loads exceed that allowed under the operating rating or equivalent rating factor.

(d) Prepare bridge files as described in the AASHTO Manual (incorporated by reference, *see* § 650.317). Maintain reports on the results of bridge inspections together with notations of any action taken to address the findings of such inspections. Maintain relevant maintenance and inspection data to allow assessment of current bridge condition. Record the findings and results of bridge inspections on standard State or Federal agency forms.

(e) Identify bridges with FCMs, bridges requiring underwater inspection, and bridges that are scour critical.

(1) Bridges with fracture critical members. In the inspection records, identify the location of FCMs and describe the FCM inspection frequency and procedures. Inspect FCMs according to these procedures.

(2) Bridges requiring underwater inspections. Identify the location of underwater elements and include a description of the underwater elements, the inspection frequency and the procedures in the inspection records for each bridge requiring underwater inspection. Inspect those elements requiring underwater inspections according to these procedures.

(3) Bridges that are scour critical. Prepare a plan of action to monitor known and potential deficiencies and to address critical findings. Monitor bridges that are scour critical in accordance with the plan.

(f) *Complex bridges.* Identify specialized inspection procedures, and additional inspector training and experience required to inspect complex bridges. Inspect complex bridges according to those procedures.

(g) *Quality control and quality assurance.* Assure systematic quality control (QC) and quality assurance (QA) procedures are used to maintain a high degree of accuracy and consistency in the inspection program. Include periodic field review of inspection teams, periodic bridge inspection refresher training for program managers and team leaders, and independent review of inspection reports and computations.

(h) *Follow-up on critical findings.* Establish a statewide or Federal agency wide procedure to assure that critical findings are addressed in a timely manner. Periodically notify the FHWA of the actions taken to resolve or monitor critical findings.

§ 650.315 Inventory.

(a) Each State or Federal agency must prepare and maintain an inventory of all bridges subject to the NBIS. Certain Structure Inventory and Appraisal (SI&A) data must be collected and retained by the State or Federal agency for collection by the FHWA as requested. A tabulation of this data is contained in the SI&A sheet distributed by the FHWA as part of the "Recording and Coding Guide for the Structure Inventory and Appraisal of the Nation's Bridges," (December 1995) together with subsequent interim changes or the most recent version. Report the data using FHWA established procedures as outlined in the "Recording and Coding Guide for the Structure Inventory and Appraisal of the Nation's Bridges."

(b) For routine, in-depth, fracture critical member, underwater, damage and special inspections enter the SI&A data into the State or Federal agency inventory within 90 days of the date of inspection for State or Federal agency bridges and within 180 days of the date of inspection for all other bridges.

(c) For existing bridge modifications that alter previously recorded data and for new bridges, enter the SI&A data into the State or Federal agency inventory within 90 days after the completion of the work for State or Federal agency bridges and within 180 days after the completion of the work for all other bridges.

(d) For changes in load restriction or closure status, enter the SI&A data into the State or Federal agency inventory within 90 days after the change in status of the structure for State or Federal agency bridges and within 180 days after the change in status of the structure for all other bridges.

§ 650.317 Reference manuals.

(a) The materials listed in this subpart are incorporated by reference in the corresponding sections noted. These incorporations by reference were approved by the Director of the Federal Register in accordance with 5 U.S.C. 552(a) and 1 CFR part 51. These materials are incorporated as they exist on the date of the approval, and notice of any change in these documents will be published in the FEDERAL REGISTER. The materials are available for purchase at the address listed below, and are available for inspection at the National Archives and Records Administration (NARA). These materials may also be reviewed at the Department of Transportation Library, 1200 New Jersey Avenue, SE., Washington, DC 20590, (202) 366-0761. For information on the availability of these materials at NARA call (202) 741-6030, or go to the following URL: *http://www.archives.gov/federal_register/code_of_federal_regulations/ibr_locations.htm* .

In the event there is a conflict between the standards in this subpart and any of these materials, the standards in this subpart will apply.

(b) The following materials are available for purchase from the American Association of State Highway and Transportation Officials, Suite 249, 444 N. Capitol Street, NW., Washington, DC 20001, (202) 624-5800. The materials may also be ordered via the AASHTO bookstore located at the following URL: *http://www.transportation.org* .

(1) The Manual for Bridge Evaluation, First Edition, 2008, AASHTO, incorporation by reference approved for §§ 650.305 and 650.313.

(2) [Reserved]

[74 FR 68379, Dec. 24, 2009]

Appendix

A3-2 Web Resources

Web Resources

Federal Government Offices

US Department of Transportation (USDOT)
http://www.dot.gov/

Federal Highway Administration (FHWA)
https://www.fhwa.dot.gov/

Federal Highway Administration (FHWA - Bridge Technology)
http://www.fhwa.dot.gov/bridge/

United States Coast Guard
http://www.uscg.mil/

Occupational Safety and Health Administration (OSHA)
http://www.osha.gov/oshdir/il.html

United States Corps of Engineers (USCOE)

St Louis District
http://www.mvs.usace.army.mil/

Rock Island District
http://www.mvr.usace.army.mil/

Chicago District
http://www.lrc.usace.army.mil/

State Government Offices

State of Illinois
http://www.illinois.gov

Illinois Department of Transportation (IDOT)
http://idot.illinois.gov/

Bureau of Bridges and Structures – Documents, Manuals, and Procedures
http://www.idot.illinois.gov/doing-business/procurements/engineering-architectural-professional-services/consultants-Resources/index

Bureau of Bridges and Structures - NBIS and Bridge Inspection Information
http://www.idot.illinois.gov/doing-business/procurements/engineering-architectural-professional-services/Consultants-Resources/index

Bureau of Bridges and Structures – Forms
http://idot.illinois.gov/home/resources/Forms-Folder/b

IDOT Region / IDOT District
http://idot.illinois.gov/about-idot/idot-regions/index

Office of Planning and Programming
http://idot.illinois.gov/transportation-system/transportation-management/index

Illinois State Police
http://www.isp.state.il.us/

Illinois Department of Professional Regulation (IDPR)
http://www.idfpr.com/

Illinois Department of Natural Resources (IDNR)
http://www.dnr.illinois.gov/

Illinois Department of Labor
http://www.state.il.us/agency/idol/

Illinois State Toll Highway Authority (ISTHA)
http://www.illinoistollway.com/homepage

County Government Offices

Illinois Association of County Engineers
http://www.iaceng.org

Municipal Government Offices

Illinois Municipal League
http://www.iml.org/

Chicago Department of Transportation
http://www.cityofchicago.org/city/en/depts/cdot.html

Federal Government Publications / Manuals / Regulations

Code of Federal Regulations (23 CFR 650C)
http://www.ecfr.gov/cgi-bin/text-idx?c=ecfr&sid=416ea8c3b7835043f3342c9af47423af&rgn=div5&view=text&node=23:1.0.1.7.28&idno=23#23:1.0.1.7.28.3

National Bridge Inspection Standards (NBIS) – FHWA
http://www.fhwa.dot.gov/bridge/nbis.htm

National Bridge Inventory
http://www.fhwa.dot.gov/bridge/nbi.htm

Recording and Coding Guide for the Structure Inventory and Appraisal of the Nation's Bridges
http://www.fhwa.dot.gov/bridge/mtguide.pdf

FHWA - 23 Metrics
http://flh.fhwa.dot.gov/programs/fabs/documents/metrics-and-commentary.pdf

FHWA – 23 Metrics – Plans of Corrective Action
http://flh.fhwa.dot.gov/programs/fabs/documents/plan-of-corrective-action.pdf

Inspection of Fracture Critical Bridge Members (Report No. FHWA-IP-86-26)
http://isddc.dot.gov/OLPFiles/FHWA/009349.pdf

Bridge Inspector's Manual for Movable Bridges (FHWA)
(Currently Out of Print)

Bridge Inspector's Reference Manual (BIRM)
http://www.nhi.fhwa.dot.gov/training/nhistoresearchresults.aspx?get=&course_no=130055&keyword=&title=&pubnumyr=&pubnumsq=&format=ALL

Culvert Inspection Manual (FHWA)
http://isddc.dot.gov/OLPFiles/FHWA/006625.pdf

Load Rating Guidance and Examples for Bolted and Riveted Gusset Plates in Truss Bridges
FHWA Publication FHWA-IF-09014
http://bridges.transportation.org/Documents/FHWA-IF-09-014LoadRatingGuidanceandExamplesforGussetsFebruary2009rev3.pdf

FHWA - Hydraulic Publications
http://www.fhwa.dot.gov/engineering/hydraulics/library_sub.cfm?keyword=007

Evaluating Scour at Bridges (HEC 18), Fifth Edition. April 2012 (FHWA-HIF-12-003)
http://www.fhwa.dot.gov/engineering/hydraulics/pubs/hif12003.pdf

FHWA publication, HEC 20, "Stream Stability at Highway Structures", FHWA-HIF-12-004
http://www.fhwa.dot.gov/engineering/hydraulics/pubs/hif12004.pdf

FHWA publication, HEC 23, Volumes 1 & 2 "Bridge Scour and Stream Stability Countermeasures", FHWA-NHI-09-111 & 112
Volume 1: http://www.fhwa.dot.gov/engineering/hydraulics/pubs/09111/09111.pdf
Volume 2: http://www.fhwa.dot.gov/engineering/hydraulics/pubs/09111/09112.pdf

Underwater Inspection of Bridges (FHWA)
http://isddc.dot.gov/OLPFiles/FHWA/009738.pdf

FHWA Technical Advisories
http://www.fhwa.dot.gov/techadvs.htm

FHWA Technical Advisory T5140.29
Load-carrying Capacity Considerations of Gusset Plates in Non-load-path-redundant Steel Truss Bridges
http://www.fhwa.dot.gov/bridge/t514029.cfm

FHWA Technical Advisory T5140.31
Inspection of Gusset Plates Using Non-Destructive Evaluation Technologies
http://www.fhwa.dot.gov/bridge/t514031.cfm

FHWA Technical Advisory T5140.23
Evaluating Scour at Bridges
http://www.fhwa.dot.gov/engineering/hydraulics/policymemo/t514023.cfm

Gusset Plate Inspection Methods
Digital Imaging Method, Oregon DOT / FHWA
http://library.state.or.us/repository/2009/200903241458232/index.pdf

State Government Publications / Manuals / Regulations

Bureau of Bridges and Structures – Documents, Manuals, and Procedures
http://www.idot.illinois.gov/doing-business/procurements/engineering-architectural-professional-services/Consultant-Resources/index

Bureau of Bridges and Structures - NBIS and Bridge Inspection Information
http://www.idot.illinois.gov/doing-business/procurements/engineering-architectural-professional-services/Consultant-Resources/index

Bureau of Bridges and Structures – Forms
http://idot.illinois.gov/home/resources/Forms-Folder/b

IDOT Bridge Information Website
http://wrc.dot.il.gov/bridgeinformation/main.aspx

Structure Information and Procedure (SIP) Manual
Illinois Structure Information System (ISIS)
http://idot.illinois.gov/Assets/uploads/files/Transportation-System/Manuals-Guides-&-Handbooks/Highways/ISIS_Manual_Internet.pdf

Structures Information Management System - County (SIMS County)
http://www.idot.illinois.gov/transportation-system/local-transportation-partners/county-engineers-and-local-public-agencies/LPA-Project-Development-and-Implementation/sims

Bureau of Local Roads and Streets Manual
http://www.idot.illinois.gov/Assets/uploads/files/Doing-Business/Manuals-Guides-&-Handbooks/Highways/Local-Roads-and-Streets/Local%20Roads%20and%20Streets%20Manual.pdf

Bureau of Local Roads and Streets Forms
http://idot.illinois.gov/home/resources/Forms-Folder/l

Bureau of Local Roads and Streets - Technology Transfer Center
http://www.idot.illinois.gov/transportation-system/local-transportation-partners/county-engineers-and-local-public-agencies/technology-transfer-center/index

All Bridge Designers (ABD) Memorandum 10.2, "Load Rating Guidance for Bolted and Riveted Gusset Plates in Steel Truss Bridges"
http://idot.illinois.gov/Assets/uploads/files/Doing-Business/Memorandums-&-Letters/Highways/Bridges/ABD-Memos/ABD102.pdf

BridgeWatch
https://ildot.bridgewatch.us/main/admin-login.html;jsessionid=5E5F4B15A8F19621923DBAD9DA5DAE53
[Requires authorized User Log-In]

Bureau of Local Roads and Streets (BLRS) Manual, Section 6.4.
Bridge Load Carrying Capacity Rerating Program
http://www.idot.illinois.gov/Assets/uploads/files/Doing-Business/Manuals-Guides-&-Handbooks/Highways/Local-Roads-and-Streets/Local%20Roads%20and%20Streets%20Manual.pdf

AASHTO Publications / Manuals

American Association of State Highway Transportation Officials (AASHTO)
http://www.transportation.org/Pages/default.aspx

AASHTO/AWS D1.5 Bridge Welding Code, 6th Edition [For Purchase Only]
https://bookstore.transportation.org/Item_details.aspx?id=1800

AASHTO LRFD Bridge Design Specification
Customary U.S. Units, 7th Edition [For Purchase Only]
https://bookstore.transportation.org/item_details.aspx?ID=2211

AASHTOWare Bridge Software [For Purchase Only]
http://www.aashtoware.org/Bridge/Pages/default.aspx

AASHTOWare Bridge Rating [For Purchase Only]
http://www.aashtoware.org/Bridge/Pages/Rating.aspx?PID=3

AASHTOWare Bridge Management [For Purchase Only]
http://www.aashtoware.org/Bridge/Pages/Management.aspx?PID=2

Manual for Bridge Evaluation (AASHTO) [For Sale Only]
https://bookstore.transportation.org/item_details.aspx?id=1750

AASHTO Manual for Bridge Element Inspection, 1st Edtion [For Purchase Only]
https://bookstore.transportation.org/collection_detail.aspx?id=129

AASHTO Movable Bridge Inspection Evaluation and Maintenance Manual
http://aashtodesign.com/aashto-movable-bridge-inspection-evaluation-and-maintenance-manual

Training / Courses

National Highway Institute (NHI)
http://www.nhi.fhwa.dot.gov/default.aspx

NHI Course Number FHWA-NHI-130091, “Underwater Bridge Inspection”
http://www.nhi.fhwa.dot.gov/training/course_search.aspx?&course_no=130091

Stream Stability and Scour at Highway Bridges (Course NHI 135046)
http://www.nhi.fhwa.dot.gov/training/course_search.aspx?&course_no=135046

Stream Stability and Scour at Highway Bridges for Bridge Inspectors (Course NHI 135047)
http://www.nhi.fhwa.dot.gov/training/course_search.aspx?&course_no=135047

Countermeasure Design for Bridge Scour and Stream Instability (Course NHI 135048)
http://www.nhi.fhwa.dot.gov/training/course_search.aspx?&course_no=135048

Plan of Action (Course NHI 135085)
http://www.nhi.fhwa.dot.gov/training/course_search.aspx?&course_no=135085

Stream Stability Concepts (Course NHI 135086)
http://www.nhi.fhwa.dot.gov/training/course_search.aspx?&course_no=135086

Scour at Highway Bridges: Concepts and Definitions (Course FHWA-NHI-135087)
http://www.nhi.fhwa.dot.gov/training/course_search.aspx?&course_no=135087

Introduction to Safety Inspection of In-Service Bridges (FHWA-NHI-130101)
(Mandatory Prerequisite to 130055)
http://www.nhi.fhwa.dot.gov/training/course_search.aspx?&course_no=130101A

Safety Inspection of In-Service Bridges (FHWA-NHI-130055)
http://www.nhi.fhwa.dot.gov/training/course_search.aspx?&course_no=130055

Fracture Critical Inspection Techniques for Steel Bridges (FHWA-NHI-130078)
http://www.nhi.fhwa.dot.gov/training/course_search.aspx?&course_no=130078

Bridge Inspection Refresher Training (FHWA-NHI-130053)
http://www.nhi.fhwa.dot.gov/training/course_search.aspx?&course_no=130053

Associations / Institutes / Societies

Structural Engineers Association of Illinois (SEAOI)
http://www.seaoi.org/

National Society of Professional Engineer's (NSPE)
http://www.nspe.org/

Illinois Society of Professional Engineers (ISPE)
http://www.illinoisengineer.com/

Accreditation Board of Engineering and Technology (ABET)
http://www.abet.org/

National Institute for Certification in Engineering Technologies (NICET)
http://www.nicet.org/

American Society of Nondestructive Testing (ASNT)
https://www.asnt.org/

American Society for Testing Materials
http://www.astm.org/

Appendix

A3-3 Definitions

DEFINITIONS

A

AASHTO - American Association of State Highway and Transportation Officials, name changed from AASHO (American Association of State Highway Officials) in 1973

American Association of State Highway and Transportation Officials (AASHTO) Manual - "Manual for Bridge Evaluation," published by the American Association of State Highway and Transportation Officials (incorporated by reference into 23 CFR 650)

abutment - part of bridge substructure at either end of bridge which transfers loads from superstructure to foundation and provides lateral support for the approach roadway embankment

ADT - Average Daily Traffic

ADTT - Average Daily Truck Traffic

aggradation - progressive raising of a streambed by deposition of sediment

anchorage - the complete assemblage of members and parts, embedded in concrete, rock or other fixed material, designed to hold a portion of a structure in correct position

anchor bolt - a metal rod or bar commonly threaded and fitted with a nut and washer at one end only, used to secure in a fixed position upon the substructure the bearings of a bridge, the base of a column, a pedestal, shoe, or other member of a structure

anchor span - the span that counterbalances and holds in equilibrium the cantilevered portion of an adjacent span; also called the back span; see CANTILEVER BEAM, GIRDER, or TRUSS

appraisal rating - a judgment of a bridge component's adequacy in comparison to current standards

approach - the part of the roadway immediately before and after the bridge structure

approach pavement - an approach which has a cross section that is either the same as or slightly wider than the bridge deck width

approach slab - a reinforced concrete slab placed on the approach embankment adjacent to and usually resting upon the abutment back wall; the function of the approach slab is to carry wheel loads on the approaches directly to the abutment, thereby transitioning any approach roadway misalignment due to approach embankment settlement

appurtenance - an element that contributes to the general functionality of the bridge site (e.g., lighting, signing)

apron - a form of scour (erosion) protection consisting of timber, concrete, riprap, paving, or other construction material placed adjacent to abutments and piers to prevent undermining

arch - a curved structure element primarily in compression that transfers vertical loads through inclined reactions to its end supports

arch rib - the main support element used in open spandrel arch construction; also known as arch ring

armor - a secondary steel member installed to protect a vulnerable part of another member, e.g., steel angles placed over the edges of a joint; also scour protection such as rip rap

as-built plans - plans made after the construction of a project, showing all field changes to the final design plans (i.e.. showing how the bridge was actually built)

ASTM - American Society for Testing and Materials

axle load - the load borne by one axle of a traffic vehicle, a movable bridge, or other motive equipment or device and transmitted through a wheel or wheels

B

backfill - material, usually soil or coarse aggregate, used to fill the unoccupied portion of a substructure excavation such as behind an abutment stem and backwall

backstay - cable or chain attached at the top of a tower and extending to and secured upon the anchorage to resist overturning stresses exerted upon the tower by a suspended span

backwall - the topmost portion of an abutment above the elevation of the bridge seat, functioning primarily as a retaining wall with a live load surcharge; it may serve also as a support for the extreme end of the bridge deck and the approach slab

backwater - the back up of water in a stream due to a downstream obstruction or constriction

bank - sloped sides of a waterway channel or approach roadway, short for embankment

bascule bridge - a bridge over a waterway with one or two leaves which rotate from a horizontal to a near- vertical position, providing unlimited overhead clearance

base metal - the surface metal of a steel element to be incorporated in a welded joint; also known as structure metal, parent metal

base plate - steel plate, whether cast, rolled or forged, connected to a column, bearing or other member to transmit and distribute its load to the substructure

batten plate - a plate with two or more fasteners at each end used in lieu of lacing to tie together the shapes comprising a built-up member

batter - the inclination of a surface in relation to a horizontal or a vertical plane; commonly designated on bridge detail plans as a ratio (e.g., 1:3, H:V); see RAKE

battered pile - a pile driven in an inclined position to resist horizontal forces as well as vertical forces

bay - the area of a bridge floor system between adjacent multi-beams or between adjacent floor beams

beam - a linear structural member designed to span from one support to another and support vertical loads

bearing - a support element transferring loads from superstructure to substructure while permitting limited movement capability

bearing capacity - the load per unit area which a structural material, rock, or soil can safely carry

bearing failure - crushing of material under extreme compressive load

bearing pile - a pile which provides support through the tip (or lower end) of the pile

bearing plate - a steel plate, which transfers loads from the superstructure to the substructure

bearing pressure - the bearing load divided by the area to which it is applied

bearing seat - a prepared horizontal surface at or near the top of a substructure unit upon which the bearings are placed

bearing stiffener - a vertical web stiffener at the bearing location

bearing stress - see BEARING PRESSURE

bedding - the soil or backfill material used to support pipe culverts

bedrock - the undisturbed rock layer below the surface soil

bench mark - an established reference point with known elevation and coordinates, used to document dimensions, elevations or position movement

bending moment - the internal force within a beam resulting from transverse loading

bent - a substructure unit made up of two or more column or column-like members connected at their top-most ends by a cap, strut, or other member holding them in their correct positions

berm - the line that defines the location where the top surface of an approach embankment or causeway is intersected by the surface of the side slope

bituminous concrete - a mixture of aggregate and liquid asphalt or bitumen, which is compacted into a dense mass

blanket - a streambed protection against scour placed adjacent to abutments and piers

BMS - Bridge Management System

bolster - a block-like member used to support a bearing on top of a pier cap or abutment bridge seat; see PEDESTAL

bond - in reinforced concrete, the grip of the concrete on the reinforcing bars, which prevents slippage of the bars relative to the concrete mass

bond stress - a term commonly applied in reinforced concrete construction to the stress developed by a force tending to produce movement or slippage at the interface between the concrete and the reinforcement bars

bowstring truss - a general term applied to a truss of any type having a polygonal arrangement of its top chord members conforming to or nearly conforming to the arrangement required for a parabolic truss; a truss with a curved top chord

box beam - a hollow structural beam with a square, rectangular, or trapezoidal cross-section that supports vertical loads and provides torsional rigidity

box culvert - a culvert of rectangular or square cross-section

box girder - a hollow, rectangular or trapezoidal shaped girder, a primary member along the longitudinal axis of the bridge, which provides good torsional rigidity

bracing - a system of secondary members that maintains the geometric configuration of primary members

bracket - a projecting support fixed upon two intersecting members to strengthen and provide rigidity to the connection

breastwall - the portion of an abutment between the wings and beneath the bridge seat; the breast wall supports the superstructure loads, and retains the approach fill; see STEM

bridge - a structure including supports erected over a depression or an obstruction, such as water, highway, or railway, and having a track or passageway for carrying traffic or other moving loads, and having an opening measured along the center of the roadway of more than 20 feet between undercopings of abutments or spring lines of arches, or extreme ends of openings for multiple boxes; it may also include multiple pipes, where the clear distance between openings is less than half of the smaller contiguous opening

bridge deficiency - a defect in a bridge component or member that makes the bridge less capable or less desirable for use

bridge inspection experience - active participation in bridge inspections in accordance with the NBIS, in either a field inspection, supervisory, or management role. A combination of bridge design, bridge maintenance, bridge construction and bridge inspection experience, with the predominant amount in bridge inspection, is acceptable.

bridge inspection refresher training - the National Highway Institute "Bridge Inspection Refresher Training Course" or other State, local, or federally developed instruction aimed to improve quality of inspections, introduce new techniques, and maintain the consistency of the inspection program.

***Bridge Inspector's Reference Manual (BIRM)* -** a comprehensive FHWA manual on programs, procedures and techniques for inspecting and evaluating a variety of in-service highway bridges.

bridge pad - the raised, leveled area upon which the pedestal, masonry plate or other corresponding element of the superstructure bears on the substructure; also called bridge seat bearing area

bridge seat - the top surface of an abutment or pier upon which the superstructure span is placed and supported; for an abutment it is the surface forming the support for the superstructure and from which the backwall rises; for a pier it is the entire top surface

bridge site - the position or location of a bridge and its surrounding area

bridging - a carpentry term applied to the cross–bracing fastened between timber beams to increase the rigidity of the floor construction, limit differential deflection and minimize the effects of impact and vibration

brittle fracture - the failure of a steel member occurring without warning, prior to plastic deformation

brush curb - a narrow curb, 9 inches or less in width, which prevents a vehicle from brushing against the railing or parapet

buckle - to fail by an inelastic change in alignment (deflection) as a result of compression in axial loaded members

built-up member - a column or beam composed of plates and angles or other structural shapes united by bolting, riveting or welding to enhance section properties

bulb t-girder - a t-shaped concrete girder with a bulb shape at the bottom of the girder cross section

bulkhead - a retaining wall-like structure commonly composed of driven sheet piles or a barrier of wooden timbers or reinforced concrete members

buoyancy - upward pressure exerted by the fluid in which an object is immersed

butt joint - a joint between two pieces of metal that have been connected in the same plane

buttress - a bracket-like wall, of full or partial height, projecting from another wall; the buttress strengthens and stiffens the wall against overturning forces; all parts of a buttress act in compression

buttressed wall - a retaining wall designed with projecting buttresses to provide strength and stability

butt weld - a weld joining two plates or shapes end to end; also splice weld

C

cable - a tension member comprised of numerous individual steel wires or strands twisted and wrapped in such a fashion to form a rope of steel; see SUSPENSION BRIDGE

cable band - a steel casting with clamp bolts which fixes a floor system suspender cable to the catenary cable of a suspension bridge

cable-stayed bridge - a bridge in which the superstructure is directly supported by cables, or stays, passing over or attached to towers located at the main piers

caisson - a rectangular or cylindrical chamber for keeping water or soft ground from flowing into an excavation

camber - the slightly arched or convex curvature provided in beams to compensate for dead load deflection; in general, a structure built with perfectly straight lines appears slightly sagged

cantilever - a structural member that has a free end projecting beyond a support; length of span overhanging the support

cantilever abutment - an abutment that resists lateral earth pressure through the opposing cantilever action of a vertical stem and horizontal footing

cantilever bridge - a general term applying to a bridge having a superstructure incorporating cantilever design

cantilever span - a superstructure span composed of two cantilever arms, or of a suspended span supported by one or two cantilever arms

cap - the topmost portion of a pier or a pile bent serving to distribute the loads upon the columns or piles and to hold them in their proper relative positions; see PIER CAP, PILE CAP

cap beam - the top member in a bent that ties together the supporting members

capstone - the topmost stone of a masonry pillar, column or other structure requiring the use of a single capping element

carbon steel - steel (iron with dissolved carbon) owing its properties principally to its carbon content; ordinary, unalloyed steel

cast-in-place (C.I.P.) - the act of placing and curing concrete within formwork to construct a concrete element in its final position

cast iron - relatively pure iron, smelted from iron ore, containing 1.8 to 4.5% free carbon and cast to shape

catch basin - a receptacle, commonly box shaped and fitted with a grilled inlet and a pipe outlet drain, designed to collect the rainwater and floating debris from the roadway surface and retain the solid material so that it may be periodically removed

catenary - the curve obtained by suspending a uniformly loaded rope or cable between two points

cathode - the negatively charged pole of a corrosion cell that accepts electrons and does not corrode

cathodic protection - a means of preventing metal from corroding by making it a cathode through the use of impressed direct current or by attaching a sacrificial anode

catwalk - a narrow walkway for access to some part of a structure **causeway -** an elevated roadway crossing a body of water

cement mortar - a mixture of sand and cement with enough water to make it plastic

cement paste - the plastic combination of cement and water that supplies the cementing action in concrete

centerline of bearings - a horizontal line that passes through the centers of the bearings, used in abutment/pier layout and beam erection

center of gravity - the point at which the entire mass of a body acts; the balancing point of an object

centroid - that point about which the static moment of all the elements of area is equal to zero

chain drag - a chain or a series of short medium weight chains attached to a T-shaped handle; used as a preliminary technique for sounding a large deck area for delamination

chamfer - an angled edge or corner, typically formed in concrete

channel - a waterway connecting two bodies of water or containing moving water; a rolled steel member having a C-shaped cross section

channel profile - a longitudinal section of a channel along its centerline

check - a crack in wood occurring parallel with the grain and through the rings of annual growth

chloride - an ingredient in deicing agents that can damage concrete and steel bridge elements

chord - a generally horizontal member of a truss

circular arch - an arch in which the intrados surface has a constant radius

clearance - the unobstructed vertical or horizontal space provided between two objects

clear headroom - the vertical clearance beneath a bridge structure available for navigational use

clear span - the unobstructed space or distance between support elements of a bridge or bridge member

clip angle - see CONNECTION ANGLE

closed spandrel arch - a stone, brick or reinforced concrete arch span having spandrel walls to retain the spandrel fill or to support either entirely or in part the floor system of the structure when the spandrel is not filled

coarse aggregate - aggregate that stays on a sieve of 5 mm (¼") square opening

coating - a material that provides a continuous film over a surface in order to protect or seal it; a film formed by the material

coefficient of thermal expansion - the unit change in dimension produced in a material by a change of one degree in temperature

cofferdam - a temporary dam-like structure constructed around an excavation to exclude water; see SHEET PILE COFFERDAM

column - a general term applying to a vertical member resisting compressive stresses and having, in general, a considerable length in comparison with its transverse dimensions

column bent - a bent shaped pier that uses columns incorporated with a cap beam

compaction - the process by which a sufficient amount of energy (compressive pressure) is applied to soil or other material to increase its density

complex bridge - movable, suspension, cable stayed, tied arch, concrete segmental, and other bridges with unusual characteristics (Illinois definition)

component - a general term reserved to define a bridge deck, superstructure or substructure

composite action - the contribution of a concrete deck to the moment resisting capacity of the superstructure beam when the superstructure beams are not the same material as the deck

composite construction - a method of construction whereby a cast-in-place concrete deck is mechanically attached to superstructure members by shear connectors

comprehensive bridge inspection training - training that covers all aspects of bridge inspection and enables inspectors to relate conditions observed on a bridge to established criteria (see the Bridge Inspector's Reference Manual for the recommended material to be covered in a comprehensive training course).

compression - a type of stress involving pressing together; tends to shorten a member; opposite of tension

compression failure - buckling, crushing, or collapse caused by compression stress

compression flange - the part of a beam that is compressed due to a bending moment

compression seal joint - a joint consisting of a neoprene elastic seal squeezed into the joint opening

concentrated load - a force applied over a small contact area; also known as point load

concrete - a stone-like mass made from a mixture of aggregates and cementing material, which is moldable prior to hardening; see BITUMINOUS CONCRETE and PORTLAND CEMENT CONCRETE

concrete beam - a structural member of reinforced concrete designed to carry bending loads

concrete pile - a pile constructed of reinforced concrete either precast and driven into the ground or cast-in- place in a hole bored into the ground

concrete tee team - "T" shaped section of reinforced concrete; cast-in-place monolithic deck and beam system

condition rating - a judgment of a bridge component condition in comparison to its original as-built condition

connection angle - a piece of angle serving to connect two elements of a member or two members of a structure; also known as clip angle

consolidation - the time dependent change in volume of a soil mass under compressive load caused by water slowly escaping from the pores or voids of the soil

construction joint - a pair of adjacent surfaces in reinforced concrete where two pours have met, reinforcement steel extends through this joint

continuous beam - a general term applied to a beam that spans uninterrupted over one or more intermediate supports

continuous bridge - a bridge designed to extend without joints over one or more interior supports

continuous footing - a common footing that is underneath a wall, or columns

continuous span - spans designed to extend without joints over one or more intermediate supports

continuous truss - a truss without hinges having its chord and web members arranged to continue uninterrupted over one or more intermediate points of support

continuous weld - a weld extending throughout the entire length of a connection

contraction - the thermal action of the shrinking of an object when cooled; opposite of expansion

coping - a course of stone laid with a projection beyond the general surface of the masonry below it and forming the topmost portion of a wall; a course of stone capping the curved or V-shaped extremity of a pier, providing a transition to the pier head proper, when so used it is commonly termed the “starling coping”, "nose coping," the "cutwater coping" or the "pier extension coping"

corbel - a piece constructed to project from the surface of a wall, column or other portion of a structure to serve as a support for another member

core - a cylindrical sample of concrete or timber removed from a bridge component for the purpose of destructive testing to determine the condition of the component

corrosion - the general disintegration of metal through oxidation

corrugated - an element with alternating ridges and valleys

counter - a truss web member that undergoes stress reversal and resists only live load tension; see WEB MEMBERS

counterfort - a bracket-like wall connecting a retaining wall stem to its footing on the side of the retained material to stabilize the wall against overturning; a counterfort, as opposed to a buttress, acts entirely in tension

counterforted abutment - an abutment that develops resistance to bending moment in the stem by use of counterforts. This permits the breast wall to be designed as a horizontal beam or slab spanning between counterforts, rather than as a vertical cantilever slab

counterforted wall - a retraining wall designed with projecting counterforts to provide strength and stability

counterweight - a weight which is used to balance the weight of a movable member; in bridge applications counterweights are used to balance a movable span so that it rotates or lifts with minimum resistance. Also sometimes used in continuous structures to prevent uplift

couplant - a viscous fluid material used with ultrasonic gages to enhance transmission of sound waves

couple - two forces that are equal in magnitude, opposite in direction, and parallel with respect to each other

coupon - a sample of steel taken from an element in order to test material properties

cover - the clear thickness of concrete between a reinforcing bar and the surface of the concrete; the depth of backfill over the top of a pipe or culvert

covered bridge - an indefinite term applied to a wooden bridge having its roadway protected by a roof and enclosing sides

cover plate - a plate used in conjunction with a flange or other structural shapes to increase flange section properties in a beam, column, or similar member

crack - a break without complete separation of parts; a fissure

cracking (reflection) - visible cracks in an overlay indicating cracks in the concrete underneath

crack initiation - the beginning of a crack usually at some microscopic defect

crack propagation - the growth of a crack due to energy supplied by repeated stress cycles

creep - an inelastic deformation that occurs under a constant load, below the yield point, and increases with time

creosote - an oily liquid obtained by the distillation of coal or wood tar and used as a wood preservative

crib - a structure consisting of a foundation grillage combined with a superimposed framework providing compartments or coffers which are filled with gravel, concrete or other material satisfactory for supporting the structure to be placed thereon

cribbing - a construction consisting of wooden, metal or reinforced concrete units so assembled as to form an open cellular-like structure for supporting a superimposed load or for resisting horizontal or overturning forces acting against it.

cribwork - large timber cells that are submerged full of concrete to make an underwater foundation

critical finding - a structural or safety related deficiency that requires immediate follow-up inspection or action

cross - transverse bracings between two main longitudinal members; see DIAPHRAGM, BRACING

cross frame - steel elements placed in "X" shaped patterns to act as stiffeners between the main carrying superstructure members

cross girders - transverse girders, supported by bearings, which support longitudinal beams or girders

cross-section - the shape of an object cut transversely to its length

cross-sectional area - the area of a cross-section

crown - the highest point of the transverse cross section of a roadway, pipe or arch; also known as soffit or vertex

crown of roadway - the vertical dimension describing the total amount the surface is convexed or raised from gutter to centerline; this is sometimes termed the cross fall or cross slope of roadway

culvert - a drainage structure beneath an embankment (e.g., corrugated metal pipe, concrete box culvert)

curb - a low barrier at the side limit of the roadway used to guide the movement of vehicles

curb inlet - see SCUPPER

curtain wall - a term commonly applied to a thin wall between main columns designed to withstand only secondary loads. Also the wall portion of a buttress or counterfort abutment that spans between the buttresses or counterforts

curvature - the degree of curving of a line or surface

curved girder - a girder that is curved in the horizontal plane in order to adjust to the horizontal alignment of the bridge

cutoff wall - vertical wall at the end of an apron or slab to prevent scour undermining

cutwater - a sharp-edged structure, facing the water channel current, built around a bridge pier to protect if from the flow of water and debris in the water

cyclic stress - stress that varies with the passage of live loads; see STRESS RANGE

D

damage inspection - this is an unscheduled inspection to assess structural damage resulting from environmental factors or human actions

dead load - a static load due to the weight of the structure itself

debris - material including floating wood, trash, suspended sediment or bed load moved by a flowing stream

deck - that portion of a bridge which provides direct support for vehicular and pedestrian traffic, supported by a superstructure

deck arch - an arch bridge with the deck above the top of the arch

deck bridge - a bridge in which the supporting members are all beneath the roadway

decking - bridge flooring installed in panels, e.g., timber planks

deck joint - a gap allowing for rotation or horizontal movement between two spans or an approach and a span

deficiency - see BRIDGE DEFICIENCY

deflection - elastic movement of a structural member under a load

deformation - distortion of a loaded structural member; may be elastic or inelastic

deformed bars - concrete reinforcement consisting of steel bars with projections or indentations (deformations) to increase the mechanical bond between the steel and concrete

degradation - general progressive lowering of a stream channel by scour

delamination - surface separation of concrete into layers; separation of glulaminated timber plies

design load - the force for which a structure is designed; the most severe combination of loads

deterioration - decline in quality over a period of time due to chemical or physical degradation

diagonal - a sloping structural member of a truss or bracing system

diagonal stay - a cable support in a suspension bridge extending diagonally from the tower to the roadway to add stiffness to the structure and diminish the deformations and undulations resulting from traffic service

diagonal tension - the tensile force due to horizontal and vertical shear in a beam

diaphragm - a transverse member placed within a member or superstructure system to distribute stresses and improves strength and rigidity; see BRACING

diaphragm wall - a wall built transversely to the longitudinal centerline of a spandrel arch serving to tie together and reinforce the spandrel walls, together with providing a support for the floor system in conjunction with the spandrel walls; also known as cross wall

differential settlement - uneven settlement of individual or independent elements of a substructure; tilting in the longitudinal or transverse direction due to deformation or loss of foundation material

dike - an earthen embankment constructed to retain or redirect water; when used in conjunction with a bridge, it prevents stream erosion and localized scour and/or so directs the stream current such that debris does not accumulate; see SPUR

discharge - the volume of fluid per unit of time flowing along a pipe or channel

displacement induced stress - stresses caused by differential deflection of adjacent parts

distributed load - a load uniformly applied along the length of an element or component of a bridge

ditch - a trough-like excavation made to collect water

diver - a specially trained individual who inspects the underwater portion of a bridge substructure and the surrounding channel

dolphin - a group of piles driven close together or a caisson placed to protect portions of a bridge exposed to possible damage by collision with river or marine traffic

dowel - a length of bar embedded in two parts of a structure to hold the parts in place and to transfer stress

drainage - a system designed to remove water from a structure

drainage area - an area in which surface run-off collects and from which it is carried by a drainage system; also known as catchment area

drain hole - hole in a box shaped member or a wall to provide means for the exit of accumulated water or other liquid; also known as drip hole; see WEEP HOLE

drain pipes - pipes that carry storm water

drawbridge - a general term applied to a bridge over a navigable body of water having a movable superstructure span of any type

drift bolt - a short length of metal bar used to connect and hold in position wooden members placed in contact; similar to a dowel

drift pin - tapered steel rod used by ironworkers to align bolt holes

drip notch - a recess cast on the underside of an overhang that prevents water from following the concrete surface onto the supporting beams

drop inlet - a type of inlet structure that conveys the water from a higher elevation to a lower outlet elevation smoothly without a free fall at the discharge

duct - the hollow space where a prestressing tendon is placed in a post-tensioned prestressed concrete girder

ductile - capable of being molded or shaped without breaking; plastic

ductile fracture - a fracture characterized by plastic deformation

ductility - the ability to withstand non−elastic deformation without rupture

dummy member - truss member that carries no primary loads; may be included for bracing or for appearance

E

E - modulus of elasticity of a material; Young's modulus; the stiffness of a material

efflorescence - a deposit on concrete or brick caused by crystallization of carbonates brought to the surface by moisture in the masonry or concrete

elastic - capable of sustaining deformation without permanent loss of shape

elastic deformation - non-permanent deformation; when the stress is removed, the material returns to its original shape

elasticity - the property whereby a material changes its shape under the action of loads but recovers its original shape when the loads are removed

elastomer - a natural or synthetic rubber-like material

elastomeric pad - a synthetic rubber pad used in bearings that compresses under loads and accommodates horizontal movement by deforming

electrolyte - a medium of air, soil, or liquid carrying ionic current between two metal surfaces, the anode and the cathode

electrolytic cell - a device for producing electrolysis consisting of the electrolyte and the electrodes

electrolytic corrosion - corrosion of a metal associated with the flow of electric current in an electrolyte

elevation view - a drawing of the side view of a structure

elliptic arch - an arch in which the intrados surface is a full half of the surface of an elliptical cylinder; this terminology is sometimes incorrectly applied to a multicentered arch

elongation - the elastic or plastic extension of a member

embankment - a mound of earth constructed above the natural ground surface to carry a road or to prevent water from passing beyond desirable limits; also known as bank

end block - in a prestressed concrete I-beam, the widened beam web at the end to provide adequate anchorage bearing for the post tensioning steel and to resist high shear stresses; similarly, the solid end diaphragm of a box beam

end post - the end compression member of a truss, either vertical or inclined in position and extending from top chord to bottom chord

end section - a concrete or steel appurtenance attached to the end of a culvert for the purpose of hydraulic efficiency, embankment retention or anchorage

end span - a span adjacent to an abutment

epoxy - a synthetic resin which cures or hardens by chemical reaction between components which are mixed together shortly before use

epoxy coated reinforcement - reinforcement steel coated with epoxy; used to prevent corrosion

equilibrium - in statics, the condition in which the forces acting upon a body are such that no external effect (or movement) is produced

equivalent uniform load - a load having a constant intensity per unit of its length producing an effect equal to that of a live load consisting of vehicle axle or wheel concentrations spaced at varying distances

erosion - wearing away of soil by flowing water not associated with a channel; see SCOUR

expansion - an increase in size or volume

expansion bearing - a bearing designed to permit longitudinal or lateral movements resulting from temperature changes and superimposed loads with minimal transmission of horizontal force to the substructure; see BEARING

expansion dam - the part of an expansion joint serving as an end form for the placing of concrete at a joint; also applied to the expansion joint device itself; see EXPANSION JOINT

expansion joint - a joint designed to permit expansion and contraction movements produced by temperature changes, loadings or other forces

expansion rocker - a bearing device at the expansion end of a beam or truss that allows the longitudinal movements resulting from temperature changes and superimposed loads through a tilting motion

expansion roller - a cylinder so mounted that by revolution it facilitates expansion, contraction or other movements resulting from temperature changes, loadings or other forces

expansion shoe - expansion bearing, generally of all metal construction

exterior girder - an outermost girder supporting the bridge floor

eyebar - a member consisting of a rectangular bar with enlarged forged ends having holes for engaging connecting pins

F

failure - a condition at which a structure reaches a limit state such as cracking or deflection where it is no longer able to perform its usual function; collapse; fracture

falsework - a temporary wooden or metal framework built to support the weight of a structure during the period of its construction and until it becomes self-supporting

fascia - an outside, covering member designed on the basis of architectural effect rather than strength and rigidity, although its function may involve both

fascia girder - an exposed outermost girder of a span sometimes treated architecturally or otherwise to provide an attractive appearance

fatigue - the tendency of a member to fail at a stress below the yield point when subjected to repetitive loading

fatigue crack - any crack caused by repeated cyclic loading at a stress below the yield point

fatigue damage - member damage (crack formation) due to cyclic loading

fatigue life - the length of service of a member subject to fatigue, based on the number of cycles it can undergo

fender - a structure that acts as a buffer to protect the portions of a bridge exposed to floating debris and water- borne traffic from collision damage; sometimes called an ice guard in regions with ice floes

fender pier - a pier-like structure which performs the same service as a fender but is generally more substantially built; see GUARD PIER

field coat - a coat of paint applied after the structure is assembled and its joints completely connected; quite commonly a part of the field erection procedure; field painting

fill - material, usually earth, used to change the surface contour of an area, or to construct an embankment

filler - a piece used primarily to fill a space beneath a batten, splice plate, gusset, connection angle, stiffener or other element; also known as filler plate

filler metal - metal prepared in wire, rod, electrode or other form to be fused with the structure metal in the formation of a weld

filler plate - see FILLER

fillet - a curved portion forming a junction of two surfaces that would otherwise intersect at an angle

fillet weld - a weld of triangular or fillet shaped cross−section between two pieces at right angles

fine aggregate - sand or grit for concrete or mortar that passes a No. 4 sieve (4.75 mm)

finger dam - expansion joint in which the opening is spanned by meshing steel fingers or teeth

fish belly - a term applied to a girder or a truss having its bottom flange or its bottom chord constructed either haunched or bow−shaped with the convexity downward; see LENTICULAR TRUSS

fixed beam - a beam with a fixed end

fixed bearing - a bearing that allows only rotational movement; see BEARING

fixed bridge - a bridge having constant position, i.e., without provision for movement to create increased navigation clearance

fixed end - movement is restrained

fixed span - a superstructure span having its position practically immovable, as compared to a movable span

fixed support - a support that will allow rotation only, no longitudinal movement

flange - the (usually) horizontal parts of a rolled I-shaped beam or of a built-up girder extending transversely across the top and bottom of the web

flange angle - an angle used to form a flange element of a built-up girder, column, strut or similar member

floating bridge - see PONTOON BRIDGE

floating foundation - used to describe a soil-supported raft or mat foundation with low bearing pressures; sometimes applied to a "foundation raft" or "foundation grillage"

flood frequency - the average time interval in years in which a flow of a given magnitude will recur

flood plain - area adjacent to a stream or river subject to flooding

floor - see DECK

floorbeam - a primary horizontal member located transversely to the general bridge alignment

floor system - the complete framework of members supporting the bridge deck and the traffic loading

flow capacity - maximum flow rate that a channel, conduit, or culvert structure is hydraulically capable of carrying

flux - a material that protects the weld from oxidation during the fusion process

footbridge - a bridge designed and constructed to provide means of traverse for pedestrian traffic only; also known as pedestrian bridge

footing - the enlarged, lower portion of a substructure, which distributes the structure load either to the earth or to supporting piles; the most common footing is the concrete slab; footer is a colloquial term for footing

foot wall - see TOE WALL

force - an influence that tends to accelerate a body or to change its movement

forms - the molds that hold concrete in place while it is hardening; also known as form work, shuttering; see LAGGING, STAY-IN-PLACE FORMS

form work - see FORMS

foundation - the supporting material upon which the substructure portion of a bridge is placed

foundation excavation - the excavation made to accommodate a footing for a structure; also known as foundation pit

foundation failure - failure of a foundation by differential settlement or by shear failure of the soil

foundation grillage - a construction consisting of steel, timber, or concrete members placed in layers; each layer is perpendicular to those above and below it and the members within a layer are generally parallel, producing a crib or grid-like effect. Grillages are usually placed under very heavy concentrated loads

foundation load - the load resulting from traffic, superstructure, substructure, approach embankment, approach causeway, or other incidental load increment imposed upon a given foundation area

foundation pile - see PILE

foundation pit - see FOUNDATION EXCAVATION

foundation seal - a mass of concrete placed underwater within a cofferdam for the base portion of structure to close or seal the cofferdam against incoming water; see TREMIE

fracture - see BRITTLE FRACTURE

fracture critical member (FCM) - a steel member in tension, or with a tension element, whose failure would probably cause a portion of or the entire bridge to collapse

fracture critical member inspection - a hands-on inspection of a fracture critical member or member components that may include visual and other nondestructive evaluation

frame - a structure which transmits bending moments from the horizontal beam member through rigid joints to vertical or inclined supporting members

framing - the arrangement and connection of the component members of a bridge superstructure

free end - movement is not restrained

friction pile - a pile that provides support through friction resistance between the pile and the surrounding earth along the lateral surface of the pile

friction roller - a roller placed between members intended to facilitate change in their relative positions by reducing the frictional resistance to translation movement

frost heave - the upward movement of, or force exerted by, soil due to freezing of retained moisture

frost line - the depth to which soil may be frozen

functionally obsolete – a bridge that has deck geometry, load carrying capacity, clearance or approach roadway alignment that no longer meets the criteria for the system of which the bridge is a part

G

gabion - rock filled wire baskets used to retain earth and provide erosion control

galvanic action - electrical current between two unlike metals

galvanize - to coat with zinc

gauge - the distance between parallel lines of rails, rivet holes, etc; a measure of thickness of sheet metal or wire; also known as gage

geometry - shape or form; relationship between lines or points

girder - a horizontal flexural member that is the main or primary support for a structure; any large beam, especially if built up

girder bridge - a bridge whose superstructure consists of two or more girders supporting a separate floor system as differentiated from a multi-beam bridge or a slab bridge

girder span - a span in which the major longitudinal supporting members are girders

glue laminated - a member created by gluing together two or more pieces of lumber

grade - the fall or rise per unit horizontal length; see GRADIENT

grade crossing - a term applicable to an intersection of two highways, two railroads or a railroad and a highway at a common grade or elevation; now commonly accepted as meaning the last of these combinations

grade intersection - the location where two roadway slopes meet in profile; to provide a smooth transition from one to the other they are connected by a vertical curve and the resulting profile is a sag or a crest

grade separation - roadways crossing each other at different elevations; see OVERPASS, UNDERPASS

gradient - the rate of inclination of the roadway and/or sidewalk surface(s) from the horizontal, applying to a bridge and its approaches; it is commonly expressed as a percentage relation (ratio) of horizontal to vertical dimensions

gravity abutment - a thick abutment that resists horizontal earth pressure through its own dead weight

gravity wall - a retaining wall that is prevented from overturning or sliding by its own dead weight

grid flooring - a steel floor system comprising a lattice pattern that may or may not be filled with concrete

grillage - assembly of parallel beams, usually steel or concrete, placed side by side, often in layers with alternating directions; see FOUNDATION GRILLAGE

groin - a wall built out from a river bank to check scour

grout - mortar having a sufficient water content to render it free-flowing, used for filling (grouting) the joints in masonry, for fixing anchor bolts and for filling cored spaces; usually a thin mix of cement, water and sometimes sand or admixtures

grouting - the process of filling in voids with grout

guard pier - a pier-like structure built to protect a swing span in its open position from collision with passing vessels or water-borne debris; may be equipped with a rest pier upon which the swing span in its open position may be latched; see FENDER PIER

guardrail - a safety feature element intended to redirect an errant vehicle

guide rail - see GUARDRAIL

gunite - the process of blowing Portland cement mortar or concrete onto a surface using compressed air

gusset plate - a plate that connects the members of a structure and holds them in correct position at a joint

gutter - a paved ditch; area adjacent to a roadway curb used for drainage

guy - a cable member used to anchor a structure in a desired position

H

H Loading - a combination of loads used to represent a two-axle truck developed by AASHTO

hairline cracks - very narrow cracks that form in the surface of concrete due to tension caused by loading

hammerhead pier - a pier with a single cylindrical or rectangular shaft and a relatively long, transverse cap; also known as a tee pier or cantilever pier

hand hole - hole provided in component plate of built-up box section to permit access to the interior for construction and maintenance purposes

hand rail - commonly applies only to sidewalk railing presenting a latticed, barred, balustered or other open web construction

hands-on - inspection within arm's length of the component. Inspection uses visual techniques that may be supplemented by nondestructive testing

hands-on access - close enough to the member or component so that it can be touched with the hands and inspected visually

hanger - a tension member serving to suspend an attached member; allows for expansion between a cantilevered and suspended span

haunch - an increase in the depth of a member usually at points of support; the outside areas of a pipe between the spring line and the bottom of the pipe

haunched girder - a horizontal beam whose cross sectional depth varies along its length

H-beam - a rolled steel member having an H-shaped cross-section (flange width equals beam depth) commonly used for piling; also H-pile

head - a measure of water pressure expressed in terms of an equivalent weight or pressure exerted by a column of water; the height of the equivalent column of water is the head

head loss - the loss of energy between two points along the path of a flowing fluid due to fluid friction; reported in feet of head

headwall - a concrete structure at the ends of a culvert to retain the embankment slopes, anchor the culvert, and prevent undercutting

headwater - the source or the upstream waters of a stream

heat treatment - any of a number of various operations involving controlled heating and cooling that are used to impart specific properties to metals; examples are tempering, quenching, and annealing

heave - the upward motion of soil caused by outside forces such as excavation, pile driving, moisture or soil expansion; see FROST HEAVE

heel - the portion of a footing behind the stem

helical - having the form of a spiral

high carbon steel - carbon steel containing 0.5 to 1.5% dissolved carbon

highway - the term 'highway' includes:
A) a road, street, and parkway;
B) a right-of-way, bridge, railroad-highway crossing, tunnel, drainage structure, sign, guardrail, and protective structure, in connection with a highway; and
C) a portion of any interstate or international bridge or tunnel and the approaches thereto, the cost of which is assumed by a State transportation department, including such facilities as may be required by the United States Customs and Immigration Services in connection with the operation of an international bridge or tunnel

hinge - a point in a structure at which a member is free to rotate

hinged joint - a joint constructed with a pin, cylinder segment, spherical segment or other device permitting rotational movement

honeycomb - an area in concrete where mortar has separated and left spaces between the coarse aggregate, usually caused by improper vibration during concrete construction

horizontal alignment - a roadway's centerline or baseline alignment in the horizontal plane

horizontal curve - a roadway baseline or centerline alignment defined by a radius in the horizontal plane

Howe truss - a truss of the parallel chord type with a web system composed of vertical (tension) rods at the panel points with an X pattern of diagonals

HS Loading - a combination of loads developed by AASHTO used to represent a truck and trailer

hybrid girder - a girder whose flanges and web are made from steel of different grades

hydraulics - the mechanics of fluids

hydrology - study of the accumulation and flow of water from watershed areas

I

I-beam - a structural member with a cross−sectional shape similar to the capital letter "I"

ice guard - see FENDER

Illinois Licensed Professional Engineer – see PROFESSIONAL ENGINEER (PE)

Illinois Licensed Structural Engineer – see STRUCTURAL ENGINER (SE)

impact - A factor that describes the effect on live load due to dynamic and vibratory effects of a moving load; in bridge design, a load based on a percentage of live load to include dynamic and vibratory effects; in fracture mechanics, a rapidly applied load, such as a collision or explosion

incomplete fusion - a weld flaw where the weld metal has not combined metallurgically with the base metal

in-depth inspection - a close-up, inspection of one or more members above or below the water level to identify any deficiencies not readily detectable using routine inspection procedures; hands-on inspection may be necessary at some locations

indeterminate stress - stress in a structural member which cannot be calculated directly; it is computed by the iterative application of mathematical equations, usually with an electronic computer; indeterminate stresses arise in continuous span and frame type structures

individual column footing - footing supporting one column

inelastic compression - compression beyond the yield point

initial inspection - the first inspection of a bridge as it becomes a part of the bridge file to provide all Structure Inventory and Appraisal (SI&A) data and other relevant data and to determine baseline structural conditions.

inlet - an opening in the floor of a bridge leading to a drain; roadway drainage structure which collects surface water and transfers it to pipes

inspection frequency - the frequency with which the bridge is inspected -- normally every two years

integral abutment - an abutment cast monolithically with the end diaphragm of the deck; such abutments usually encase the ends of the deck beams and are pile supported

integral deck - a deck which is monolithic with the superstructure; concrete tee beam bridges have integral decks

interior girder - any girder between exterior or fascia girders

interior span - a span of which both supports are intermediate substructure units

intermittent weld – a noncontinuous weld commonly composed of a series of short welds separated by spaces of equal length

inventory item - data contained in the structure file pertaining to bridge identification, structure type and material, age and service, geometric data, navigational data, classification, load rating and posting, proposed improvements, and inspections

inventory rating - the capacity of a bridge to withstand loads under normal service conditions based on 55% of yield strength

invert elevation - the bottom or lowest point of the internal surface of the transverse cross section of a pipe or culvert

isotropic - having the same material properties in all directions, e.g., steel

J

jacking - the lifting of elements using a type of jack (e.g., hydraulic), sometimes acts as a temporary support system

jack stringer - the outermost stringer supporting the bridge floor in a panel or bay

jacket - a protective shell surrounding a pile made of fabric, concrete or other material

jersey barrier - a concrete barrier with sloping front face that was developed by the New Jersey Department of Transportation

joint - in masonry, the space between individual stones or bricks; in concrete, a division in continuity of the concrete; in a truss, point at which members of a truss are joined

K

keeper plate - a plate, which is connected to a sole plate, designed to prohibit a beam from becoming dislodged from the bearing

key - a raised portion of concrete on one face of a joint that fits into a depression on the adjacent face

king-post - the vertical member in a "king-post" type truss; also known as king rod

king-post truss - two triangular panels with a common center vertical; the simplest of triangular system trusses

kip - a kilo pound (1000 lb.); convenient unit for structural calculations

knee brace - a short member engaging at its ends two other members that are joined to form a right angle or a near-right angle to strengthen and stiffen the connecting joint

knee wall - a return of the abutment backwall at its ends to enclose the bridge seat on three of its sides; also called cheek wall

knife edge - a condition in which corrosion of a steel member has caused a sharp edge

knuckle - an appliance forming a part of the anchorage of a suspension bridge main suspension member permitting movement of the anchorage chain

K-truss - a truss having a web system wherein the diagonal members intersect the vertical members at or near the mid-height; the assembly in each panel forms a letter "K"

L

L-abutment - a cantilever abutment with the stem flush with the toe of the footing, forming an "L" in cross section

laced column - a riveted, steel built-up column of usually four angles or two channels tied together laterally with lacing

lacing - small flat plates, usually with one rivet at each end, used to tie individual sections of built up members; see LATTICE

lagging - horizontal members spanning between piles to form a wall; forms used to produce curved surfaces; see FORMS

lamellar tear - incipient cracking parallel to the face of a steel member

laminated timber - timber planks glued together face to face to form a larger member; see GLUE LAMINATED

lane loading - a design loading which represents a line of trucks crossing over a bridge

lap joint - a joint between two members in which the end of one member overlaps the end of the other

lateral - a member placed approximately perpendicular to a primary member

lateral bracing - the bracing assemblage engaging a member perpendicular to the plane of the member; intended to resist transverse movement and deformation; also keeps primary parallel elements in truss bridges and girder bridges aligned; see BRACING

lattice - a crisscross assemblage of diagonal bars, channels, or angles on a truss; also known as latticing, lacing

lattice truss - in general, a truss having its web members inclined but more commonly the term is applied to a truss having two or more web systems composed entirely of diagonal members at any interval and crossing each other without reference to vertical members

leaching - the action of removing substances from a material by passing water through it

leaf - the movable portion of a bascule bridge that forms the span of the structure

legal load - the maximum legal load for each vehicle configuration permitted by law for the State in which the bridge is located

lenticular truss - a truss having parabolic top and bottom chords curved in opposite directions with their ends meeting at a common joint; also known as a fish belly truss

levee - an embankment built to prevent flooding of low-lying land

leveling course - a layer of bituminous concrete placed to smooth an irregular surface

light-weight concrete - concrete of less than standard unit weight; may be no-fines concrete, aerated concrete, or concrete made with lightweight aggregate

link - a hanger plate in a pin and hanger assembly whose shape is similar to an eyebar, e.g., the head (at the pinhole) is wider than the shank

link and roller - a movable bridge element consisting of a hinged strut–like link fitted with a roller at its bottom end, supported upon a shoe plate or pedestal and operated by a thrust strut serving to force it into a vertical position and to withdraw it therefrom; when installed at each outermost end of the girders or the trusses of a swing span their major function is to lift them to an extent that their camber or droop will be removed and the arms rendered free to act as simple spans; when the links are withdrawn to an inclined position fixed by the operating mechanism the span is free to be moved to an open position

live load - a temporary dynamic load such as vehicular traffic that is applied to a structure; also accompanied by vibration or movement affecting its intensity

load - a force carried by a structure component

load factor design - a design method used by AASHTO, based on limit states of material and arbitrarily increased loads

load indicating washer - a washer with small projections on one side, which compress as the bolt is tightened; gives a direct indication of the bolt tension that has been achieved

load rating - the determination of the live load carrying capacity of a bridge using bridge plans and supplemented by information gathered from a field inspection

load and resistance factor design (LRFD) - design method used by AASHTO, based on limit states of material with increased loads and reduced member capacity based on statistical probabilities

local buckling - localized buckling of a beam's plate element, can lead to failure of member

longitudinal bracing - bracing that runs lengthwise with a bridge and provides resistance against longitudinal movement and deformation of transverse members

loss of prestress - loss of prestressing force due to a variety of factors, including shrinkage and creep of the concrete, creep of the prestressing tendons, and loss of bond

lower chord - the bottom horizontal member of a truss

luminaire - a lighting fixture

M

main beam - a horizontal structural member which supports the span and bears directly on a column or wall

maintenance - basic repairs performed on a facility to keep it at an adequate level of service

maintenance and protection of traffic - the management of vehicular and pedestrian traffic through a construction zone to ensure the safety of the public and the construction workforce; MPT; TRAFFIC PROTECTION

marine borers - mollusks and crustaceans that live in water and destroy wood by digesting it

masonry - that portion of a structure composed of stone, brick or concrete block placed in courses and usually cemented with mortar

masonry cement - Portland cement and lime used to make mortar for masonry construction

masonry plate - a steel plate placed on the substructure to support a superstructure bearing and to distribute the load to the masonry beneath

mattress - a flexible scour protection blanket composed of interconnected timber, gabions, or concrete units.

meander - a twisting, winding action from side to side; characterizes the serpentine curvature of a narrow, slow flowing stream in a wide flood plain

median - separation between opposing lanes of highway traffic; also known as median strip

member - an individual angle, beam, plate, or built component piece intended ultimately to become an integral part of an assembled frame or structure

metal corrosion - oxidation of metal by electro-galvanic action involving an electrolyte (moisture), an anode (the metallic surface where oxidation occurs), a cathode (the metallic surface that accepts electrons and does not corrode), and a conductor (the metal piece itself)

midspan - a reference point half–way between the supports of a beam or span

military loading - a loading pattern used to simulate heavy military vehicles passing over a bridge

mill scale - dense iron oxide on iron or steel that forms on the surface of metal that has been forged or hot worked

modular joint - a bridge joint designed to handle large movements consisting of an assembly of several strip or compression seals

moisture content - the amount of water in a material expressed as a percent by weight **moment -** the couple effect of forces about a given point; see BENDING MOMENT **monolithic -** forming a single mass without joints

mortar - a paste of portland cement, sand, and water laid between bricks, stones or blocks

movable bridge - a bridge having one or more spans capable of being raised, turned, lifted, or slid from its normal service location to provide a clear navigation passage; see BASCULE BRIDGE, VERTICAL LIFT BRIDGE, PONTOON BRIDGE, RETRACTILE DRAW BRIDGE, ROLLING LIFT BRIDGE, and SWING BRIDGE

movable span - a general term applied to a superstructure span designed to be swung, lifted or otherwise moved longitudinally, horizontally or vertically, usually to provide increased navigational clearance

moving load - a live load which is moving, for example, vehicular traffic

MPT - see MAINTENANCE AND PROTECTION OF TRAFFIC

MSE - mechanically stabilized earth; see REINFORCED EARTH

N

nail laminated - a laminated member produced by nailing two or more pieces of timber together face to face

NBIS - National Bridge Inspection Standards, first established in 1971 to set national policy regarding bridge inspection frequency, inspector qualifications, report formats, and inspection and rating procedures

NCHRP - National Cooperative Highway Research Program

NICET - National Institute for Certification in Engineering Technologies, the NICET provides nationally applicable voluntary certification programs covering several broad engineering technology fields and a number of specialized subfields. For information on the NICET program certification contact: National Institute for Certification in Engineering Technologies, 1420 King Street, Alexandria, VA 22314–2794.

NDE - nondestructive evaluation

NDT - nondestructive testing; any testing method of checking structural quality of materials that does not damage them

necking - the elongation and contraction in area that occurs when a ductile material is stressed

negative bending - bending of a member that causes tension in the surface adjacent to the load, e.g., moment at interior supports of a span or at the joints of a frame

negative moment - bending moment in a member such that tension stresses are produced in the top portions of the member; typically occurs in continuous beams and spans over the intermediate supports

neoprene - a synthetic rubber-like material used in expansion joints and elastomeric bearings

neutral axis - the internal axis of a member in bending along which the strain is zero; on one side of the neutral axis the fibers are in tension, on the other side the fibers are in compression

nose - a projection acting as a cut water on the upstream end of a pier; see STARLING

notch effect - stress concentration caused by an abrupt discontinuity or change in section

O

offset - a horizontal distance measured at right angles to a survey line to locate a point off the line

on center - a description of a typical dimension between the centers of the objects being measured

open spandrel arch - a bridge that has open spaces between the deck and the arch members allowing "open" visibility through the bridge

open spandrel ribbed arch - a structure in which two or more comparatively narrow arch rings, called ribs, function in the place of an arch barrel; the ribs are rigidly secured in position by arch rib struts located at intervals along the length of the arch; the arch ribs carry a column type open spandrel construction which supports the floor system and its loads

operating rating - the capacity of a bridge to withstand loads based on 75% of yield strength; the maximum permissible live load to which the structure may be subjected for the load configuration used in the rating

operator's house - the building containing control devices required for opening and closing a movable bridge span

orthotropic - having different properties in two or more directions at right angles to each other (e.g., wood); see ANISOTROPY

outlet - in hydraulics, the discharge end of drains, sewers, or culverts

out-of-plane distortion - distortion of a member in a plane other than that which the member was designed to resist

overlay - see WEARING SURFACE

overload - a weight greater than the structure is designed to carry

overpass - bridge over a roadway or railroad

overturning - tipping over; rotational movement

oxidation - the chemical breakdown of a substance due to its reaction with oxygen from the air

oxidized steel - rust

P

pack - a steel plate inserted between two others to fill a gap and fit them tightly together; also known as packing; fill; filler plate

pack rust - rust forming between adjacent steel surfaces in contact which tends to force the surfaces apart due to the increase in material volume

paddleboard - striped, paddle-shaped signs or boards placed on the roadside in front of a narrow bridge as a warning of reduced roadway width

panel -the portion of a truss span between adjacent points of intersection of web and chord members

panel point - the point of intersection of primary web and chord members of a truss

parabolic arch - an arch in which the intrados surface is a segment of a symmetrical parabolic surface (suited to concrete arches)

parabolic truss - a polygonal truss having its top chord and end post vertices coincident with the arc of a parabola, its bottom chord straight and its web system either triangular or quadrangular; also known as a parabolic arched truss

parapet - a low wall along the outmost edge of the roadway of a bridge to protect vehicles and pedestrians

pedestal - concrete or built-up metal member constructed on top of a bridge seat for the purpose of providing a specific bearing seat elevation

pedestal pier - one or more piers built in block-like form that may be connected by an integrally built web between them; when composed of a single, wide block–like form, it is called a wall or solid pier

pedestrian bridge - see FOOT BRIDGE

penetration - when applied to creosoted lumber, the depth to which the surface wood is permeated by the creosote oil; when applied to pile driving; the depth a pile tip is driven into the ground

physical testing - the testing of bridge members in the field or laboratory

pier - a substructure unit that supports the spans of a multi-span superstructure at an intermediate location between its abutments

pier cap - the topmost horizontal portion of a pier that distributes loads from the superstructure to the vertical pier elements

pile - a shaft-like linear member which carries loads to underlying rock or soil strata

pile bent - a row of driven or placed piles extending above the ground surface supporting a pile cap; see BENT

pile bridge - a bridge carried on piles or pile bents

pile cap - a slab or beam which acts to secure the piles in position laterally and provides a bridge seat to receive and distribute superstructure loads

pile foundation - a foundation supported by piles in sufficient number and to a depth adequate to develop the bearing resistance required to support the substructure load

pile pier - see PILE BENT

piling - collective term applied to group of piles in a construction; see PILE, SHEET PILES

pin - a cylindrical bar used to connect elements of a structure

pin-connected truss - a general term applied to a truss of any type having its chord and web members connected at each panel point by a single pin

pin and hanger - a hinged connection detail designed to allow for expansion and rotation between a cantilevered and suspended span at a point between supports.

pin joint - a joint in a truss or other frame in which the members are assembled upon a single cylindrical pin

pin packing - arrangement of truss members on a pin at a pinned joint

pin plate - a plate rigidly attached upon the end of a member to develop the desired bearing upon a pin or pin- like bearing, and secure additional strength and rigidity in the member; doubler plate

pintle - a relatively small steel pin engaging the rocker of an expansion bearing, in a sole plate or masonry plate, thereby preventing sliding of the rocker

pipe - a hollow cylinder used for the conveyance of water, gas, steam etc.

piping - removal of fine particles from within a soil mass by flowing water

plain concrete - concrete with no structural reinforcement except, possibly, light steel to reduce shrinkage and temperature cracking

plan and profile - a drawing that shows both the roadway plan view and profile view in the same scale; see PLAN VIEW, PROFILE

plan view - drawing that represents the top view of the road or a structure

plastic deformation - permanent deformation of material beyond the elastic range

plate - a flat sheet of metal which is relatively thick; see SHEET STEEL

plate girder - a large I-shaped beam composed of a solid web plate with flange plates attached to the web plate by flange angles or fillet welds

plug weld - a weld joining two members produced by depositing weld metal within holes cut through one or more of the members; also known as slot weld

pneumatic caisson - an underwater caisson in which the working chamber is kept free of water by compressed air at a pressure nearly equal to the water pressure outside it

pointing - the compacting of the mortar into the outermost portion of a joint and the troweling of its exposed surface to secure water tightness or desired architectural effect; replacing deteriorated mortar

ponding - accumulation of water

pontoon bridge - a bridge supported by floating on pontoons moored to the riverbed; a portion may be removable to facilitate navigation

pony truss - a through truss without top chord lateral bracing

pop-out - conical fragment broken out of a concrete surface by pressure from reactive aggregate particles

portable bridge - a bridge that may be readily erected for a temporary communication-transport service and disassembled and reassembled at another location

portal - the clear unobstructed space of a through truss bridge forming the entrance to the structure

portal bracing - a system of sway bracing placed in the plane of the end posts of the trusses

portland cement - a fine dry powder made by grinding limestone clinker made by heating limestone in a kiln; this material reacts chemically with water to produce a solid mass

portland cement concrete - a mixture of aggregate, portland cement, water, and usually chemical admixtures

positive moment - a force applied over a distance that causes compression in the top fiber of a beam and tension in the bottom fiber

post - a member resisting compressive stresses, located vertical to the bottom chord of a truss and common to two truss panels; sometimes used synonymously for vertical; see COLUMN

posting - a limiting dimension, speed, or loading indicating larger dimensions, higher speeds, or greater loads cannot be safely taken by the bridge

post-stressing - see POSTTENSIONING

posttensioning - a method of prestressing concrete in which the tendons are stressed after the concrete has been cast and hardens

pot bearing - a bearing type that allows for multi-dimensional rotation by using a piston supported on an elastomer contained on a cylinder ("pot"), or spherical bearing element

pot holes - irregular shaped, disintegrated areas of bridge deck or roadway pavement caused by the failure of the surface material

Pratt truss - a truss with parallel chords and a web system composed of vertical posts with diagonal ties inclined outward and upward from the bottom chord panel points toward the ends of the truss; also known as N-truss

precast concrete - concrete members that are cast and cured before being placed into their final positions on a construction site

prestressed concrete - concrete with strands, tendons, or bars that are stressed before the live load is applied

prestressing - applying forces to a structure to deform it in such a way that it will withstand its working loads more effectively; see POSTTENSIONING, PRETENSIONING

pretensioning - a method of prestressing concrete in which the strands are stressed before the concrete is placed; strands are released after the concrete has hardened, inducing internal compression into the concrete

primary member - a member designed to resist flexure and distribute primary live loads and dead loads

priming coat - the first coat of paint applied to the metal or other material of a bridge; also known as base coat, or primer

probing - investigating the location and condition of submerged foundation material using a rod or shaft of appropriate length; checking the surface condition of a timber member for decay using a pointed tool, e.g., an ice pick

Professional Engineer (PE) - an individual, who has fulfilled education and experience requirements and passed rigorous exams that, under State licensure laws, permits them to offer engineering services directly to the public. Engineering licensure laws vary from State to State, but, in general, to become a PE an individual must be a graduate of an engineering program accredited by the Accreditation Board for Engineering and Technology, pass the Fundamentals of Engineering exam, gain four years of experience working under a PE, and pass the Principles of Practice of Engineering exam

profile - a section cut vertically along the center line of a roadway or waterway to show the original and final ground levels

program manager - the individual in charge of the program, that has been assigned or delegated the duties and responsibilities for bridge inspection, reporting, and inventory. The program manager provides overall leadership and is available to inspection team leaders to provide guidance

protective system - a system used to protect bridges from environmental forces that cause steel and concrete to deteriorate and timber to decay, typically a coating system

PS&E - Plans, Specifications, and Estimate; the final submission of the designers to the owner

public road. - the term ``public road'' means any road or street under the jurisdiction of and maintained by a public authority and open to public travel

punching shear - shear stress in a slab due to the application of a concentrated load

Q

quality assurance (QA) - the use of sampling and other measures to assure the adequacy of quality control procedures in order to verify or measure the quality level of the entire bridge inspection and load rating program

quality control (QC) - procedures that are intended to maintain the quality of a bridge inspection and load rating at or above a specified level

queen-post truss - a parallel chord type of truss having three panels with the top chord occupying only the length of the center panel

R

railing - a fence-like construction built at the outermost edge of the roadway or the sidewalk portion of a bridge to protect pedestrians and vehicles; see HANDRAIL

rake - an angle of inclination of a surface in relation to a vertical plane; also known as batter

ramp - an inclined traffic-way leading from one elevation to another

range of stress - the algebraic difference between the minimum and maximum stresses in a member

raveling - the consistent loss of aggregate from a pavement resulting in a poor riding surface

reaction - the resistance of a support to a load

rebar - see REINFORCING BAR

redundancy - the quality of a bridge that enables it to perform its design function in a damaged state.

redundant member - a member in a bridge which renders it a statically indeterminate structure; the structure would be stable without the redundant member whose primary purpose is to reduce the stresses carried by the determinate structure

rehabilitation - significant repair work to a structure

reinforced concrete - concrete with steel reinforcing bars embedded in it to supply increased tensile strength and durability

reinforced concrete pipe - pipe manufactured of concrete reinforced with steel bars or welded wire fabric

Reinforced Earth - proprietary retaining structure made of earth and steel strips connected to concrete facing; the steel strips are embedded in backfill and interlock with the facing; see MSE

reinforcement - rods or mesh embedded in concrete to strengthen it

reinforcing bar - a steel bar, plain or with a deformed surface, which bonds to the concrete and supplies tensile strength to the concrete

relaxation - a decrease in stress caused by creep

residual stress - a stress that is trapped in a member after it is formed into its final shape

resistivity of soil - an electrical measurement in ohm-cm that estimates the corrosion activity potential of a given soil

resurfacing - a layer of wearing surface material that is put over the approach or deck surface in order to create a more uniform riding surface

Retained Earth - proprietary retaining structure made of weld wire fabric strips connected to concrete facing; see MSE

retaining wall - a structure designed to restrain and hold back a mass of earth

rib - curved structural member supporting a curved shape or panel

rigger - an individual who erects and maintains scaffolding or other access equipment such as that used for bridge inspection

rigid frame - a structural frame in which bending moment is transferred between horizontal and vertical or inclined members by joints

rigid frame bridge - a bridge with moment resisting joints between the horizontal portion of the superstructure and vertical or inclined legs

rigid frame pier - a pier with two or more columns and a horizontal beam on top constructed monolithically to act like a frame

rip-rap - stones, blocks of concrete or other objects placed upon river and stream beds and banks, lake, tidal or other shores to prevent scour by water flow or wave action

rivet - a one-piece metal fastener held in place by forged heads at each end

riveted joint - a joint in which the assembled members are fastened by rivets

roadway - the portion of the road intended for the use of vehicular traffic

roadway shoulder - drivable area immediately adjoining the traveled roadway

rocker bearing - a bridge support that accommodates expansion and contraction of the superstructure through a tilting action

rocker bent - a bent hinged or otherwise articulated at one or both ends to provide the longitudinal movements resulting from temperature changes and superimposed loads

rolled shape - forms of rolled steel having "I", "H", "C", "Z" or other cross sectional shapes

rolled-steel section - any hot-rolled steel section including wide flange shapes, channels, angles, etc.

roller - a steel cylinder intended to provide longitudinal movements by rolling contact

roller bearing - a single roller or a group of rollers so installed as to permit longitudinal movement of a structure

roller nest - a group of steel cylinders used to facilitate the longitudinal movements resulting from temperature changes and superimposed loads

rolling lift bridge - a bridge of bascule type devised to roll backward and forward upon supporting girders when operated through an "open and closed" cycle

routine inspection - regularly scheduled inspection consisting of observations and/or measurements needed to determine the physical and functional condition of the bridge, to identify any changes from initial or previously recorded conditions, and to ensure that the structure continues to satisfy present service requirements.

routine permit load - a live load, which has a gross weight, axle weight or distance between axles not conforming with State statutes for legally configured vehicles, authorized for unlimited trips over an extended period of time to move alongside other heavy vehicles on a regular basis.

runoff - the quantity of precipitation that flows from a catchment area past a given point over a certain period

S

sacrificial anode - the anode in a cathodic protection system

sacrificial coating - a coating over the base material to provide protection to the base material; examples include galvanizing on steel and aluclading on aluminum

sacrificial protection - see CATHODIC PROTECTION

sacrificial thickness - additional material thickness provided for extra service life of a member in an aggressive environment

saddle - a member located upon the topmost portion of the tower of a suspension bridge which acts as a bearing surface for the catenary cable passing over it

safe load - the maximum load that a structure can support with an appropriate factor of safety

safety belt - a belt worn in conjunction with a safety line to prevent falling a long distance when working at heights; no longer acceptable as fall protection under OSHA rules

safety curb - a curb between 9 inches and 24 inches wide serving as a limited use refuge or walkway for pedestrians crossing a bridge

safety factor - the difference between the ultimate strength of a member and the maximum load it is expected to carry

safety harness - harness with shoulder, leg, and waist straps of approved OSHA design used as personal fall protection in conjunction with appropriate lanyards and tie off devices

sag - to sink or bend downward due to weight or pressure

scaling - the gradual disintegration of a concrete surface due to the failure of the cement paste caused by chemical attack or freeze/thaw cycles

scour - removal of a streambed or bank area by stream flow; erosion of streambed or bank material due to flowing water; often considered as being localized around piers and abutments of bridges

scour critical bridge - a bridge with a foundation element that has been determined to be unstable for the observed or evaluated scour condition.

scour protection - protection of submerged material by steel sheet piling, rip rap, concrete lining, or combination thereof

scuba - self-contained underwater breathing apparatus; a portable breathing device for free swimming divers

scupper - an opening in the deck of a bridge to provide means for water accumulated upon the roadway surface to drain

seam weld - a weld joining the edges of two members placed in contact; in general, it is not a stress-carrying weld

seat - a base on which an object or member is placed

seat angle - a piece of angle attached to the side of a member to provide support for a connecting member either temporarily during its erection or permanently; also known as a shelf angle

secondary member - a member that does not carry calculated live loads; bracing members

section loss - loss of a member's cross sectional area usually by corrosion or decay

section view - an internal representation of a structure element as if a slice was made through the element

seepage - the slow movement of water through a material

segmental - constructed of individual pieces or segments which are collectively joined to form the whole

segmental arch - a circular arch in which the intrados is less than a semi-circle

segregation - in concrete construction, the separation of large aggregate from the paste during placement

seismic - a term referring to earthquakes (e.g., seismic forces)

service load design - AASHTO's description for Working Stress Design

settlement - the movement of substructure elements due to changes in the soil properties

shear - the load acting across a beam near its support

shear connectors - devices that extend from the top flange of a beam and are embedded in the above concrete slab, forcing the beam and the concrete to act as a single unit

shear spiral - a coil-shaped component welded to the top flange of a beam, as a shear connector

shear stress - the shear force per unit of cross−sectional area; also referred to as diagonal tensile stress

shear stud - a type of shear connector in the form of a road with a head that is attached to a beam with an automatic stud-welding gun

sheet pile cofferdam - a wall-like barrier composed of driven piling constructed to surround the area to be occupied by a structure and permit dewatering of the enclosure so that the excavation may be performed in the open air

sheet piles - flattened Z-shaped interlocking piles driven into the ground to keep earth or water out of an excavation or to protect an embankment

sheet piling - a general or collective term used to describe a number of sheet piles installed to form a crib, cofferdam, bulkhead, etc.; also known as sheeting

sheet steel - steel in the form of a relatively thin sheet or plate; for flat rolled steel, specific thicknesses vs. widths are classified by AISI as bar, strip, sheet or plate

shelf angle - see SEAT ANGLE

shim - a thin plate inserted between two elements to fix their relative position and to transmit bearing stress

shoe - a steel or iron member, usually a casting or weldment, beneath the superstructure bearing that transmits and distributes loads to the substructure bearing area

shop - a factory or workshop

shop drawings - detailed drawings developed from the more general design drawings used in the manufacture or fabrication of bridge components

shoring - a strut or prop placed against or beneath a structure to restrain movement; temporary soil retaining structure

shoulder abutment - a cantilever abutment extending from the grade line of the road below to that of the road overhead, usually set just off the shoulder; see FULL HEIGHT ABUTMENT

shoulder area - see ROADWAY SHOULDER

shrinkage – a reduction in volume caused by moisture loss in concrete or timber while drying

sidewalk - the portion of the bridge floor area serving pedestrian traffic only

sidewalk bracket - frame attached to and projecting from the outside of a girder to serve as a support for the sidewalk stringers, floor and railing or parapet

sight distance - the length of roadway ahead that is easily visible to the driver; required sight distances are defined by AASHTO's "A Policy on Geometric Design of Highways and Streets"

silt - very finely divided siliceous or other hard rock material removed from its mother rock through erosive action rather than chemical decomposition

simple span - beam or truss with two unrestraining supports near its ends

S-I-P forms - see STAY-IN-PLACE FORMS, FORMS

skew angle - the angle produced when the longitudinal members of a bridge are not perpendicular to the substructure; the skew angle is the acute angle between the alignment of the bridge and a line perpendicular to the centerline of the substructure units

slab - a wide beam, usually of reinforced concrete, which supports load by flexure

slab bridge - a bridge having a superstructure composed of a reinforced concrete slab constructed either as a single unit or as a series of narrow slabs placed parallel with the roadway alignment and spanning the space between the supporting substructure units

slide - movement on a slope because of an increase in load or a removal of support at the toe; also known as landslide

slip form - to form concrete by advancing a mold

slope - the inclination of a surface expressed as a ratio of one unit of rise or fall for so many horizontal units

slope protection - a thin surfacing of stone, concrete or other material deposited upon a sloped surface to prevent its disintegration by rain, wind or other erosive action; also known as slope pavement

slot weld - see PLUG WELD

slump - a measurement taken to determine the stiffness of concrete; the measurement is the loss in height after a cone-shaped mold is lifted

soffit - underside of a bridge deck; also see INTRADOS

soldier beam - a steel pile driven into the earth with its projecting butt end used as a cantilever beam

soldier pile wall - a series of soldier beams supporting horizontal lagging to retain an excavated surface; commonly used in limited right-of-way applications

soil interaction structure - a subsurface structure that incorporates both the strength properties of a flexible structure and the support properties of the soil surrounding the structure

sole plate - a plate attached to the bottom flange of a beam that distributes the reaction of the bearing to the beam

solid sawn beam – a section of tree cut to the desired size at a saw mill

sounding - determining the depth of water by an echo-sounder or lead line; tapping a surface to detect delaminations (concrete) or decay (timber)

spall - depression in concrete caused by a separation of a portion of the surface concrete, revealing a fracture parallel with or slightly inclined to the surface

span - the distance between the supports of a beam; the distance between the faces of the substructure elements; the complete superstructure of a single span bridge or a corresponding integral unit of a multiple span structure; see CLEAR SPAN

spandrel - the space bounded by the arch extrados and the horizontal member above it

spandrel column - a column constructed on the rib of an arch span and serving as a support for the deck construction of an open spandrel arch; see OPEN SPANDREL ARCH

spandrel fill - the fill material placed within the spandrel space of a closed spandrel arch

spandrel tie - a wall or a beam-like member connecting the spandrel walls of an arch and securing them against bulging and other deformation; in stone masonry arches the spandrel tie walls served to some extent as counterforts

spandrel wall - a wall built on the extrados of an arch filling the space below the deck; see TIE WALLS

special inspection - an inspection scheduled at the discretion of the bridge owner, used to monitor a particular known or suspected deficiency

specifications - a detailed description of requirements, materials, tolerances, etc., for construction which are not shown on the drawings; also known as specs

spider - inspection access equipment consisting of a bucket or basket which moves vertically on wire rope, driven by an electric or compressed air motor

spillway - a channel used to carry water away from the top of a slope to an adjoining outlet

splice - a structural joint between members to extend their effective length

spread footing - a foundation, usually a reinforced concrete slab, which distributes load to the earth or rock below the structure

spring line - the horizontal line along the face of an abutment or pier at which the intrados of an arch begins

spur - a projecting jetty-like construction placed adjacent to an abutment or embankment to prevent scour

stage - inspection access equipment consisting of a flat platform supported by horizontal wire-rope cables; the stage is then slid along the cables to the desired position; a stage is typically 20 inches wide, with a variety of lengths available

staged construction - construction performed in phases, usually to permit the flow of traffic through the site

statics - the study of forces and bodies at rest

station - 100 feet (U.S. customary); 100 meters (metric)

stationing - a system of measuring distance along a baseline

stay-in-place forms - a corrugated metal sheet for forming deck concrete that will remain in place after the concrete has set; the forms do not contribute to deck structural capacity after the deck has cured; see FORMS, S.I.P FORMS

stay plate - a tie plate or diagonal brace to prevent movement

steel - an alloy of iron, carbon, and various other elements

stem - the vertical wall portion of an abutment retaining wall, or solid pier; see BREASTWALL

stiffener - a small member attached to another member to transfer stress and to prevent buckling

stiffening girder - a girder incorporated in a suspension bridge to distribute the traffic loads uniformly among the suspenders and reduce local deflections

stiffening truss - a truss incorporated in a suspension bridge to distribute the traffic loads uniformly among the suspenders and reduce local deflections

stirrup - U-shaped bar used as a connection device in timber and metal bridges; U-shaped bar placed in concrete to resist diagonal tension (shear) stresses

stone masonry - the portion of a structure composed of stone, generally placed in courses with mortar

straight abutment - an abutment whose stem and wings are in the same plane or whose stem is included within a length of retaining wall

strain - the change in length of a body produced by the application of external forces, measured in units of length; this is the proportional relation of the amount of change in length divided by the original length

strand - a number of wires grouped together usually by twisting

strengthening - adding to the capacity of a structural member **stress -** the force acting across a unit area in a solid material

stress concentration - local increases in stress caused by a sudden change of cross section in a member

stress range - the variation in stress at a point with the passage of live load, from initial dead load value to the maximum additional live load value and back

stress raiser - a detail that causes stress concentration

stress reversal - change of stress type from tension (+) to compression (−) or vice versa

stress sheet - a drawing showing all computed stresses resulting from the application of a system of loads together with the design composition of the individual members resulting from the application of assumed unit stresses for the material to be used in the structure

stress-laminated timber – consists of multiple planks mechanically clamped together to perform as one unit

stringer - a longitudinal beam spanning between transverse floorbeams and supporting a bridge deck

strip seal joint - a joint using a relatively thin neoprene seal fitted into the joint opening

structural analysis - engineering computation to determine the carrying capacity of a structure

Structural Engineer (SE) - an individual, who has fulfilled education and experience requirements and passed rigorous exams that, under Illinois State licensure laws, permits them to offer engineering services directly to the public. To become an SE an individual must be a graduate of an engineering program accredited by the Accreditation Board for Engineering and Technology, pass the Fundamentals of Engineering exam, gain four years of experience working under an SE, and pass the Structural Engineering exam

structural member - an individual piece, such as a beam or strut, which is an integral part of a structure

structural redundancy - the ability of an interior continuous span to resist total collapse by cantilever action in the event of a fracture

structural shapes - the various types of rolled iron and steel having flat, round, angle, channel, "I", "H", "Z" and other cross-sectional shapes adapted to heavy construction

structural stability - the ability of a structure to maintain its normal configuration, not collapse or tip in any way, under existing and expected loads

structural tee - a tee-shaped rolled member formed by cutting a wide flange longitudinally along the centerline of web

structurally deficient – bridges where 1) significant load carrying elements are found to be in poor or worse condition due to deterioration and/or damage or, 2) the adequacy of the waterway opening provided by the bridge is determined to be extremely insufficient to the point of causing intolerable traffic interruptions

structure - something, such as a bridge, that is designed and built to sustain a load

strut - a member acting to resist axial compressive stress; usually a secondary member

stub abutment - an abutment within the topmost portion of an embankment or slope having a relatively small vertical height and usually pile supported; stub abutments may also be founded on spread footings

sub-panel - a truss panel divided into two parts by an intermediate web member, generally a subdiagonal or a hanger

substructure - the abutments and piers built to support the span of a bridge superstructure

superelevation - the difference in elevation between the inside and outside edges of a roadway in a horizontal curve; required to counteract the effects of centrifugal force

superimposed dead load - dead load that is applied to a compositely designed bridge after the concrete deck has cured; for example, the weight of parapets or railings placed after the concrete deck has cured

superstructure - the entire portion of a bridge structure that primarily receives and supports traffic loads and in turn transfers these loads to the bridge substructure

surface corrosion - rust that has not yet caused measurable section loss

suspended span - a simple span supported from the free ends of cantilevers

suspender - a vertical wire cable, metal rod, or bar connecting the catenary cable of a suspension bridge or an arch rib to the bridge floor system, transferring loads from the deck to the main members

suspension bridge - a bridge in which the floor system is supported by catenary cables that are supported upon towers and are anchored at their extreme ends

suspension cable - a catenary cable which is one of the main members upon which the floor system of a suspension bridge is supported; a cable spanning between towers

swale - a drainage ditch with moderately sloping sides

sway anchorage - a guy, stay cable or chain attached to the floor system of a suspension bridge and anchored upon an abutment or pier to increase the resistance of the suspension span to lateral movement; also known as sway cable

sway bracing - diagonal brace located at the top of a through truss, transverse to the truss and usually in a vertical plane, to resist transverse horizontal forces

sway frame - a complete panel or frame of sway bracing

swing span bridge - a movable bridge in which the span rotates in a horizontal plane on a pivot pier, to permit passage of marine traffic

T

tack welds - small welds used to hold member elements in place during fabrication or erection

tail water - water ponded below the outlet of a waterway, thereby reducing the amount of flow through the waterway; see HEADWATER

team leader - individual in charge of an inspection team responsible for planning, preparing, and performing field inspection of the bridge

tee beam - a rolled steel section shaped like a "T"; reinforced concrete beam shaped like the letter "T"

temperature steel - reinforcement in a concrete member to prevent cracks due to stresses caused by temperature changes

temporary bridge - a structure built for emergency or interim use, intended to be removed in a relatively short time

tendon - a prestressing cable, strand, or bar

tensile force - a force caused by pulling at the ends of a member; see TENSION

tensile strength - the maximum tensile stress at which a material fails

tension - stress that tends to pull apart material

thermal movement - contraction and expansion of a structure due to a change in temperature

three-hinged arch - an arch that is hinged at each support and at the crown

through arch - an arch bridge in which the deck passes between the arches

through girder bridge - normally a two-girder bridge where the deck is between the supporting girders

tie - a member carrying tension

tie plate - relatively short, flat member carrying tension forces across a transverse member; for example, the plate connecting a floor beam cantilever to the main floor beam on the opposite side of a longitudinal girder; see STAY PLATE

tie rod - a rod-like member in a frame functioning to transmit tensile stress; also known as tie bar

tie walls - one of the walls built at intervals above an arch ring connecting and supporting the spandrel walls; any wall designed to serve as a restraining member to prevent bulging and distortion of two other walls connected thereby; see DIAPHRAGM WALL

timber - wood suitable for construction purposes

toe - the front portion of a footing from the intersection of the front face of the wall or abutment to the front edge of the footing; the line where the side slope of an embankment meets the existing ground

toe of slope - the location defined by the intersection of the embankment with the surface existing at a lower elevation; also known as toe

toe wall - a relatively low retaining wall placed near the "toe−of−slope" location of an embankment to protect against scour or to prevent the accumulation of stream debris; also known as footwall

ton - a unit of weight equal to 2,000 pounds

torsion - twisting about the longitudinal axis of a member

torsional rigidity - a beam's capacity to resist a twisting force along the longitudinal axis

tower - a pier or frame supporting the catenary cables of a suspension bridge

traffic control - modification of normal traffic patterns by signs, cones, flagmen, etc.

transducer - a device that converts one form of energy into another form, usually electrical into mechanical or the reverse; the part of ultrasonic testing device which transmits and receives sound waves

transverse bracing - the bracing assemblage engaging the columns of bents and towers in planes transverse to the bridge alignment that resists the transverse forces tending to produce lateral movement and deformation of the columns

transverse girder - see CROSS GIRDER

travel way - the roadway

trestle - a bridge structure consisting of spans supported on braced towers or frame bents

truck loading - a combination of loads used to simulate a single truck passing over a bridge

truss - a jointed structure made up of individual members primarily carrying axial loads arranged and connected in triangular panels

truss bridge - a bridge having a pair of trusses for a superstructure

trussed beam - a beam stiffened to reduce its deflection by a steel tie-rod that is held at a short distance from the beam by struts

truss panel - see PANEL

tubular sections - structural steel tubes, rectangular, square or circular; also known as hollow sections

tubular truss - a truss whose chords and struts are composed of pipes or cylindrical tubes

turnbuckle - a long, cylindrical, internally threaded nut with opposite hand threads at either end used to connect the elements of adjustable rod and bar members

two-hinged arch - a rigid frame that may be arch-shaped or rectangular with hinges at both supports

U

ultimate strength - the highest stress that a material can withstand before breaking

ultrasonic thickness gage - an instrument used to measure the thickness of a steel element using a probe which emits and receives sound waves

ultrasonic testing - nondestructive testing of a material's integrity using sound waves

underpass - the lowermost feature of a grade separated crossing; see OVERPASS

underwater diver bridge inspection training - training that covers all aspects of underwater bridge inspection and enables inspectors to relate the conditions of underwater bridge elements to established criteria (see the Bridge Inspector's Reference Manual section on underwater inspection for the recommended material to be covered in an underwater diver bridge inspection training course).

underwater inspection - inspection of the underwater portion of a bridge substructure and the surrounding channel, which cannot be inspected visually at low water by wading or probing, generally requiring diving or other appropriate techniques.

uniform load - a load of constant magnitude along the length of a member

unit stress - the force per unit of surface or cross–sectional area

uplift - a negative reaction or a force tending to lift a beam, truss, pile, or any other bridge element upwards

upper chord - the top longitudinal member of a truss

V

vaulted abutment - an abutment in which the space between wings, abutment stem, approach slab, and footings is hollow.

vertical - describes the axis of a bridge perpendicular to the underpass surface

vertical alignment - a roadway's centerline or baseline alignment in the vertical plane

vertical clearance - the distance between the structure and the underpass

vertical curve - a sag or crest in the profile of a roadway, usually in the form of a parabola, to transition between grades

vertical lift bridge - a bridge in which the span moves up and down while remaining parallel to the roadway

viaduct - a series of spans carried on piers at short intervals

vibration - the act of vibrating concrete to compact it

Vierendeel truss - a truss with only chords and verticals joined with rigid connections designed to transfer moment

voided slab - a precast concrete deck unit cast with cylindrical voids to reduce dead load

voids - an empty or unfilled space in concrete

W

wale, waler - horizontal bracing running along the inside walls of a sheeted pit or cofferdam

Warren truss - a triangular truss consisting of sloping members between the top and bottom chords and no verticals; members form the letter W

water/cement ratio - the weight of water divided by the weight of portland cement in concrete; this ratio is a major factor in the strength of concrete

waterproofing membrane - an impervious layer placed between the wearing surface and the concrete deck, used to protect the deck from water and corrosive chemicals that could damage it

waterway opening - the available width for the passage of water beneath a bridge

wearing surface - the topmost layer of material applied upon a roadway to receive the traffic loads and to resist the resulting disintegrating action; also known as wearing course

web - the portion of a beam located between and connected to the flanges; the stem of a dumbbell type pier

web crippling - damage caused by high compressive stresses resulting from concentrated loads

web members - the intermediate members of a truss, not including the end posts, usually vertical or inclined

web plate - the plate forming the web element of a plate girder, built-up beam or column

web stiffener - a small member welded to a beam web to prevent buckling of the web

weephole - a hole in a concrete retaining wall to provide drainage of the water in the retained soil

weld - a joint between pieces of metal at faces that have been made plastic and caused to flow together by heat or pressure

weldability - the degree to which steel can be welded without using special techniques, such as pre-heating

welded bridge structure - a structure whose metal elements are connected by welds

welded joint - a joint in which the assembled elements and members are connected by welds

welding - the process of making a welded joint

weld layer - a single thickness of weld metal composed of beads (runs) laid in contact to form a pad weld or a portion of a weld made up of superimposed beads

weld metal - fused filler metal added to the fused structure metal to produce a welded joint or a weld layer

weld penetration - the depth beneath the original surface to which the structure metal has been fused in the making of a fusion weld; see PENETRATION

weld sequence - the order of succession required for making the welds of a built-up piece or the joints of a structure, to minimize distortion and residual stresses

weld toe - particularly in a filet weld, the thin end of the taper furthest from the center of the weld cross section

wheel load - the load carried by and transmitted to the supporting structure by one wheel of a traffic vehicle, a movable bridge, or other motive equipment or device; see AXLE LOAD

weep hole - a hole in a concrete element (abutment backwall or retaining wall) used to drain water from behind the element; any small hole installed for drainage

Whipple truss - a double-intersecting through Pratt truss where the diagonals extend across two panels

wide flange - a rolled I-shaped member having flange plates of rectangular cross section, differentiated from an S-beam (American Standard) in that the flanges are not tapered

wind bracing - the bracing systems that function to resist the stresses induced by wind forces

wind lock - a lateral restraining device found on steel girder and truss bridges

wingwall - the retaining wall extension of an abutment intended to restrain and hold in place the side slope material of an approach roadway embankment

wire rope - steel cable of multiple strands which are composed of steel wires twisted together

X Y Z

X-ray testing - nondestructive testing technique used for detecting internal flaws by passing X-rays through a material to film or other detector

Appendix

A3-4 Acronyms

Acronyms

AADT	Annual Average Daily Traffic
AASHTO	American Association of State Highway Transportation Officials
ABD	All Bridge Designers
ABET	Accreditation Board of Engineering and Technology
ASNT	American Society of Nondestructive Testing
ASTM	American Society for Testing Materials
AWS	American Welding Society
BBS	Bureau of Bridges and Structures
BIRM	Bridge Inspector's Reference Manual
BIS	Bridge Inspection System
BLRS	Bureau of Local Roads and Streets
BMS	Bridge Management System
BMU	Bridge Management Unit
BPT	Bridge Project Tracking
BSAP	Bridge Scour Assessment Procedure
CFR	Code of Federal Regulations
DM	D-Meter Thickness Measurement
DT	Dye Penetrant Testing
EIT	Engineer In Training
FCM	Fracture Critical Member
FHWA	Federal Highway Administration
HEC	Hydraulic Engineering Circular
IDNR	Illinois Department of Natural Resources
IDOT	Illinois Department of Transportation

IRIS	Illinois Roadway Information System
ISIS	Illinois Structure Information System
ISTHA	Illinois State Toll Highway Authority
LRFD	Load Resistance Factor Design
MBE	Manual for Bridge Evaluation
MMIS	Maintenance Management Information System
MT	Magnetic Particle Testing
NBI	National Bridge Inventory
NBIS	National Bridge Inspection Standards
NCET	National Certification in Engineering Technologies
NDE	Non-destructive Evaluation
NDT	Non-destructive Testing
NEXRAD	Next Generation Radar
NHI	National Highway Institute
NHS	National Highway System
NOAA	National Oceanic and Atmospheric Administration
NSPE	National Society of Professional Engineers
NWS	National Weather Service
OSHA	Occupational Safety and Health Administration
POA	Plan of Action
PPI	Preliminary Pin Inspection
PPS	Program Planning System
PT	Post-tensioned Tendons
QA	Quality Assurance
QC	Quality Control
QC/QA	Quality Control and Quality Assurance
RT	Radiographic Testing

SBIP	Small Bridge Inspection Program
SES	Scour Evaluation Study
SI&A	Structure Inventory and Appraisal
SIMS	Structure Information Management System
SIP	Structure Information and Procedure
SPI	Supplemental Pin Inspection
SQL	Structured Query Language
STRAHNET	Strategic Highway Network
USC	United States Code
USDOT	United States Department of Transportation
USGS	United States Geological Survey
UT	Ultrasonic Testing
VT	Visual Testing

Appendix

A3-5 FCM Inspection Plan Template

MLK Approach Bridge over I-55/70 W.B., Missouri Avenue and Railroads

East St. Louis, IL

Structure No. 082-6003

June 27, 2012

Fracture Critical Member Inspection Plan

Prepared for
Illinois Department of Transportation

Team Leader: <<insert name here>>

INSTRUCTIONS: (DELETE THIS BOX) Replace the photo and update the text on this sheet.

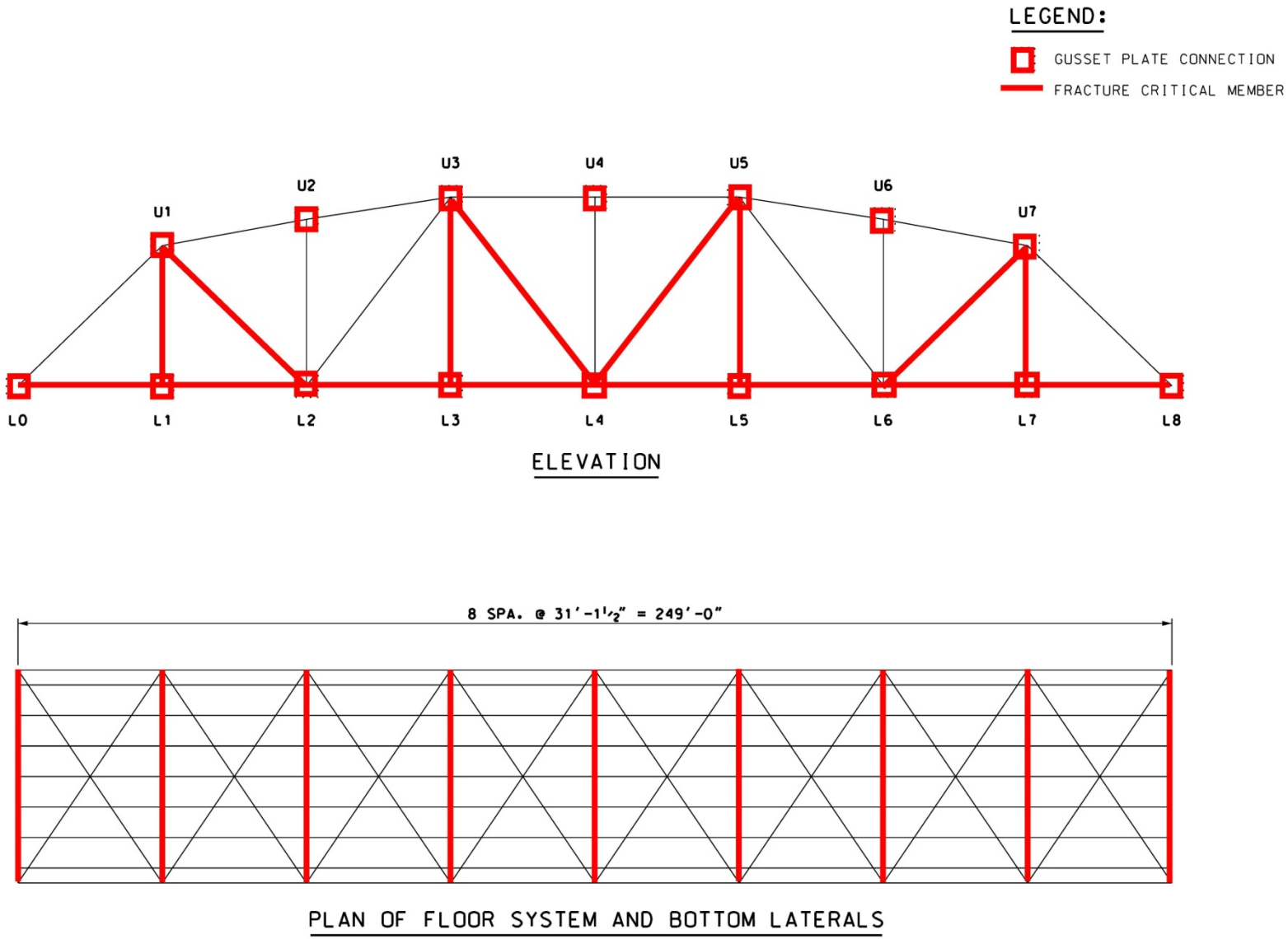

Fracture Critical Member Sketch

INSTRUCTIONS: (DELETE THIS BOX) Replace this sketch with a sketch for the subject bridge. Floorbeams spaced >15' are considered fracture critical.

Fracture Critical Member Inventory						
Span	Fracture Critical Member		Fatigue Sensitive Details			Inspection Procedures for FCMs
	Member	Description	Fatigue Detail Description	Member Detail	AASHTO Fatigue Category	
38	L0-L1, L1-L2, L2-L3, L3-L4, L4-L5, L5-L6, L6-L7, L7-L8	Truss Bottom Chord	Built-up steel member	Net section of steel member and riveted connection	D	Inspect entire length of the members, including the riveted connections. **Special Feature Inspection: Not Required**
38	U1-L1, U7-L7	Truss Verticals	Wide flange steel member	Net section of steel member and riveted connection	D	Inspect entire length of the members, including the riveted connections. **Special Feature Inspection: Not Required**
38	U1-L2, L2-U3, U3-L4, L4-U5, U5-L6, L6-U7	Truss Diagonals	Built-up steel member	Net section of steel member and riveted connection	D	Inspect entire length of the members, including the riveted connections. **Special Feature Inspection: Not Required**
38	FB0, FB1, FB2, FB3, FB4, FB5, FB6, FB7	Floorbeams	Wide flange steel member	Tension flange of floorbeam and connection to truss	A	Inspect the tension flanges and the floorbeam hangers. **Special Feature Inspection: Not Required**
38	Panel Points: U1 thru U7, L0 thru L8	Gusset Plates	Steel plate	Gusset plate and net section of rivets in connection	D	Inspect all gusset plates for section loss, buckling, rust pack, and integrity of rivets. **Special Feature Inspection: Not Required**

INSTRUCTIONS: (DELETE THIS BOX) List each of the fracture critical members, grouping them as appropriate. Expand table as necessary.

Fracture Critical Inspection Scope and Frequency	Perform Fracture Critical Member Inspection with each Routine Inspection at a **maximum interval of 24 months**. Hands-on inspection of all FCM's is required with emphasis on tension members and fatigue sensitive details. All previously noted defects shall be verified and recorded to determine if the defect has changed over time.
FCM Inspection Procedures	1. Modify this Fracture Critical Member Inspection Plan as member conditions or inspection requirements change. Add a line at the top of the Revision History row at the bottom of this table to describe the revision(s). Place a copy of the revised Fracture Critical Member Inspection Plan in the bridge file. 2. **Report Critical Inspection Findings to the Team Leader on site immediately. If Team Leader concurs that a particular defect is a Critical Inspection Finding contact <<enter District/Agency Program Manager name, phone number and e-mail address here>> immediately.** Refer to the *Structural Services Manual Section 3.3.10* for guidance on what constitutes a Critical Inspection Finding. 3. Hands-on inspection required on all surfaces of all FCMs including base metal, welds, bolts and rivets. 4. Hands-on inspection required on all surfaces of any connections to FCMs including base metal, welds, bolts and rivets in the vicinity of any connections. 5. Clean FCMs as required to expose the area to be inspected. Clean dirt/debris using a broom, shovel, or heavy duty vacuum. Clean corrosion product in order to determine what the remaining section is. Report excessive/hazardous debris accumulation to XXXXX XXXXX at XXX.XXX.XXXX so that the bridge can be scheduled for washing. 6. Measure section remaining with a calibrated ultrasonic thickness guage. In order to improve accuracy of plate thicknesses by this method, clean a ½" diameter area of paint and corrosion product using a wire brush or a "flapper" type sanding disc to expose bare steel at the location where thickness is to be measured. After taking the measurement, clean the area of dirt/dust/couplant and paint the bare metal using a spray paint "paint+primer" type product to prevent additional corrosion. Be sure to note the nominal thickness of the plate from an area close by that has no section loss. 7. When taking photos of small defects take a close-up photo and a wider angle photo from the same perspective for context. 8. Losses in FCMs representing less than 3% of the design section property are not required to be recorded. Take pictures of these types of defects for the "Paint" item in the Defect Table. 9. Losses in FCMs representing greater than 3% of the design section property are required to be recorded in the Defect Table and on a sketch with enough detail to inform live load rating calculations. 10. Cracks shall be documents through the use of photos and sketches. By visual inspection, mark the visible end of the crack with a permanent marker or paint pen and date the mark. Cracks in critical areas should be recommended for follow up NDT. Report all cracks to the Team Leader on site for immediate evaluation. If a crack is encountered on a particular detail that is repeated throughout the bridge the Team Leader shall notify all of the inspection teams to inspect for similar defects at these details. 11. A gusset report is on file for this bridge. Gusset plates shall be compared to the latest gusset plate report. Any changed

	conditions observed in the field shall be noted. 12. For all of the required reporting, use the latest versions of the forms.
NDT	1. UT inspection of XX pins required.
Access	1. Access to upper portions of truss members by man-lift with a minimum 40' reach. Man-lift shall not be used over live traffic lanes and two separate lane closures with be required. 2. Access to floor system components by underbridge inspection unit. A unit with a 50' horizontal reach will allow access to the entire width of the structure from one side of the bridge. 3. Note that aerial power lines run along the south face of the bridge approximately 20 feet from the truss.
Traffic Control	1. Inspection and traffic control activities only allowed between 10am and 3pm due to high traffic volumes. 2. Maintain a single lane of traffic at all times. 3. Two-lane bridge requires flaggers. 4. Posted speed limit = 50 MPH. 5. Use latest IDOT Highway Standard 701xxx-xx 6. Notify District Bridge maintenance Engineer at XXX.XXX.XXXX for closure approval.
Revision History	1. Modified 5/25/2012 by Tom Inspector, IDOT: added inspection and traffic control hour restrictions ~~2. Created 5/16/2010 by Joe Inspector, Inspection Consultant, Inc.~~

Appendix

A3-6 AASHTO Fatigue Categories

deck plate details and 4350 for all other details, based on Category C. Thus, finite life design may produce more economical designs on lower-volume roadways.

Table 6.6.1.2.3-1—Detail Categories for Load-Induced Fatigue

Description	Category	Constant A (ksi^3)	Threshold $(\Delta F)_{TH}$ ksi	Potential Crack Initiation Point	Illustrative Examples
Section 1—Plain Material away from Any Welding					
1.1 Base metal, except noncoated weathering steel, with rolled or cleaned surfaces. Flame-cut edges with surface roughness value of 1,000 μ-in. or less, but without re-entrant corners.	A	250×10^8	24	Away from all welds or structural connections	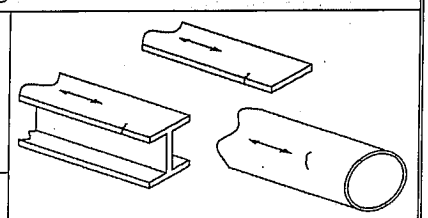
1.2 Noncoated weathering steel base metal with rolled or cleaned surfaces designed and detailed in accordance with FHWA (1989). Flame-cut edges with surface roughness value of 1,000 μ-in. or less, but without re-entrant corners.	B	120×10^8	16	Away from all welds or structural connections	
1.3 Member with re-entrant corners at copes, cuts, block-outs or other geometrical discontinuities made to the requirements of AASHTO/AWS D1.5, except weld access holes.	C	44×10^8	10	At any external edge	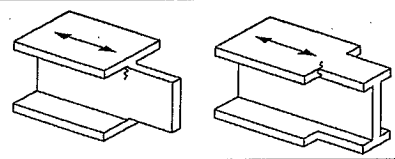
1.4 Rolled cross sections with weld access holes made to the requirements of AASHTO/AWS D1.5, Article 3.2.4.	C	44×10^8	10	In the base metal at the re-entrant corner of the weld access hole	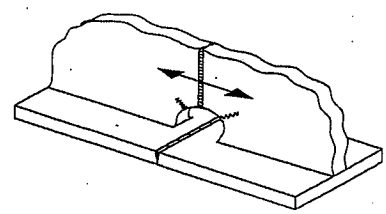
1.5 Open holes in members (Brown et al., 2007).	D	22×10^8	7	In the net section originating at the side of the hole	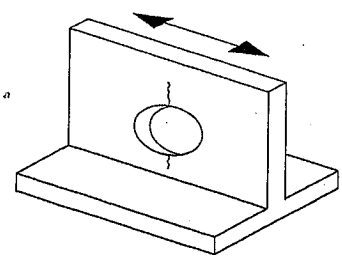
Section 2—Connected Material in Mechanically Fastened Joints					
2.1 Base metal at the gross section of high-strength bolted joints designed as slip-critical connections with pretensioned high-strength bolts installed in holes drilled full size or subpunched and reamed to size—e.g., bolted flange and web splices and bolted stiffeners. (Note: see Condition 2.3 for bolt holes punched full size; see Condition 2.5 for bolted angle or tee section member connections to gusset or connection plates.)	B	120×10^8	16	Through the gross section near the hole	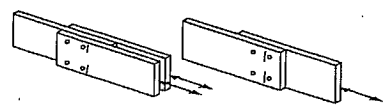

continued on next page

Table 6.6.1.2.3-1 (continued)—Detail Categories for Load-Induced Fatigue

Description	Category	Constant A (ksi^3)	Threshold $(\Delta F)_{TH}$ ksi	Potential Crack Initiation Point	Illustrative Examples
Section 2—Connected Material in Mechanically Fastened Joints (continued)					
2.2 Base metal at the net section of high-strength bolted joints designed as bearing-type connections but fabricated and installed to all requirements for slip-critical connections with pretensioned high-strength bolts installed in holes drilled full size or subpunched and reamed to size. (Note: see Condition 2.3 for bolt holes punched full size; see Condition 2.5 for bolted angle or tee section member connections to gusset or connection plates.)	B	120×10^8	16	In the net section originating at the side of the hole	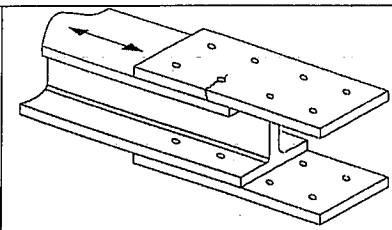
2.3 Base metal at the net section of all bolted connections in hot dipped galvanized members (Huhn and Valtinat, 2004); base metal at the appropriate section defined in Condition 2.1 or 2.2, as applicable, of high-strength bolted joints with pretensioned bolts installed in holes punched full size (Brown et al., 2007); and base metal at the net section of other mechanically fastened joints, except for eyebars and pin plates, e.g., joints using ASTM A307 bolts or non-pretensioned high-strength bolts. (Note: see Condition 2.5 for bolted angle or tee section member connections to gusset or connection plates).	D	22×10^8	7	In the net section originating at the side of the hole or through the gross section near the hole, as applicable	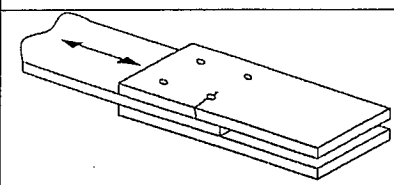
2.4 Base metal at the net section of eyebar heads or pin plates (Note: for base metal in the shank of eyebars or through the gross section of pin plates, see Condition 1.1 or 1.2, as applicable.)	E	11×10^8	4.5	In the net section originating at the side of the hole	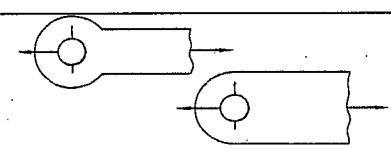
2.5 Base metal in angle or tee section members connected to a gusset or connection plate with high-strength bolted slip-critical connections. The fatigue stress range shall be calculated on the effective net area of the member, $A_e = UA_g$, in which $U=(1-\bar{x}/L)$ and where A_g is the gross area of the member. $\bar{x}$ is the distance from the centroid of the member to the surface of the gusset or connection plate and L is the out-to-out distance between the bolts in the connection parallel to the line of force. The effect of the moment due to the eccentricities in the connection shall be ignored in computing the stress range (McDonald and Frank, 2009).	See applicable Category above	See applicable Constant above	See applicable Threshold above	Through the gross section near the hole, or in the net section originating at the side of the hole, as applicable	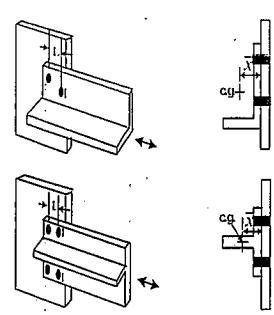

continued on next page

Table 6.6.1.2.3-1 (continued)—Detail Categories for Load-Induced Fatigue

Description	Category	Constant A (ksi^3)	Threshold $(\Delta F)_{TH}$ ksi	Potential Crack Initiation Point	Illustrative Examples
2.5 (continued) The fatigue category shall be taken as that specified for Condition 2.1. For all other types of bolted connections, replace A_g with the net area of the member, A_n, in computing the effective net area according to the preceding equation and use the appropriate fatigue category for that connection type specified for Condition 2.2 or 2.3, as applicable.					
Section 3—Welded Joints Joining Components of Built-Up Members					
3.1 Base metal and weld metal in members without attachments built up of plates or shapes connected by continuous longitudinal complete joint penetration groove welds back-gouged and welded from the second side, or by continuous fillet welds parallel to the direction of applied stress.	B	120×10^8	16	From surface or internal discontinuities in the weld away from the end of the weld	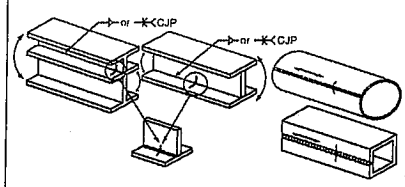
3.2 Base metal and weld metal in members without attachments built up of plates or shapes connected by continuous longitudinal complete joint penetration groove welds with backing bars not removed, or by continuous partial joint penetration groove welds parallel to the direction of applied stress.	B′	61×10^8	12	From surface or internal discontinuities in the weld, including weld attaching backing bars	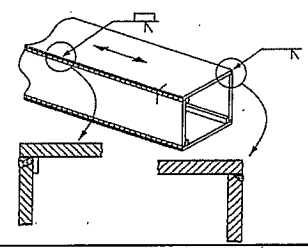
3.3 Base metal and weld metal at the termination of longitudinal welds at weld access holes made to the requirements of AASHTO/AWS D1.5, Article 3.2.4 in built-up members. (Note: does not include the flange butt splice).	D	22×10^8	7	From the weld termination into the web or flange	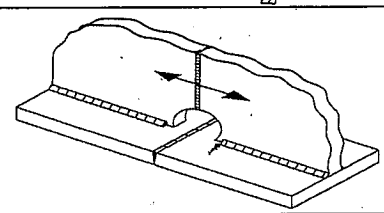
3.4 Base metal and weld metal in partial length welded cover plates connected by continuous fillet welds parallel to the direction of applied stress.	B	120×10^8	16	From surface or internal discontinuities in the weld away from the end of the weld	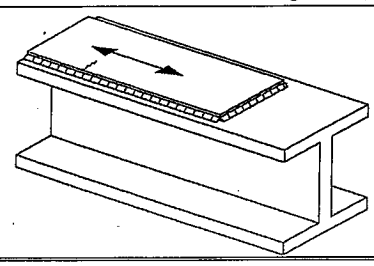

continued on next page

Table 6.6.1.2.3-1 (continued)—Detail Categories for Load-Induced Fatigue

Description	Category	Constant A (ksi^3)	Threshold $(\Delta f)_{TH}$ ksi	Potential Crack Initiation Point	Illustrative Examples
Section 3—Welded Joints Joining Components of Built-Up Members (continued)					
3.5 Base metal at the termination of partial length welded cover plates having square or tapered ends that are narrower than the flange, with or without welds across the ends, or cover plates that are wider than the flange with welds across the ends:				In the flange at the toe of the end weld or in the flange at the termination of the longitudinal weld or in the edge of the flange with wide cover plates	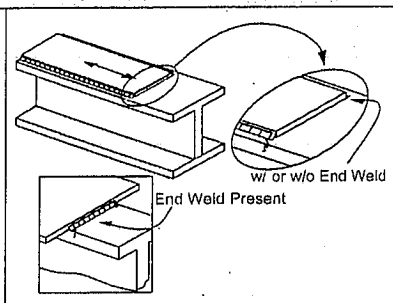
Flange thickness ≤ 0.8 in.	E	11×10^8	4.5		
Flange thickness > 0.8 in.	E′	3.9×10^8	2.6		
3.6 Base metal at the termination of partial length welded cover plates with slip-critical bolted end connections satisfying the requirements of Article 6.10.12.2.3.	B	120×10^8	16	In the flange at the termination of the longitudinal weld	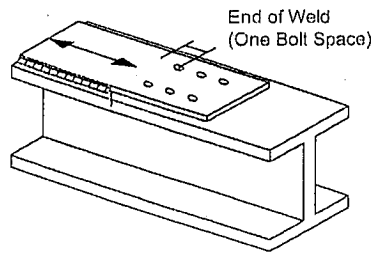
3.7 Base metal at the termination of partial length welded cover plates that are wider than the flange and without welds across the ends.	E′	3.9×10^8	2.6	In the edge of the flange at the end of the cover plate weld	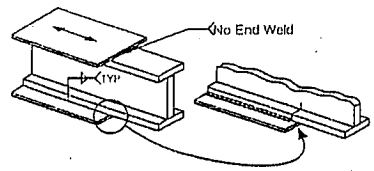
Section 4—Welded Stiffener Connections					
4.1 Base metal at the toe of transverse stiffener-to-flange fillet welds and transverse stiffener-to-web fillet welds. (Note: includes similar welds on bearing stiffeners and connection plates).	C′	44×10^8	12	Initiating from the geometrical discontinuity at the toe of the fillet weld extending into the base metal	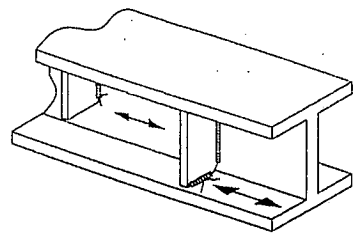
4.2 Base metal and weld metal in longitudinal web or longitudinal box-flange stiffeners connected by continuous fillet welds parallel to the direction of applied stress.	B	120×10^8	16	From the surface or internal discontinuities in the weld away from the end of the weld	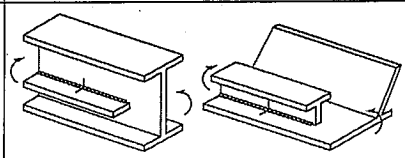

continued on next page

Table 6.6.1.2.3-1 (continued)—Detail Categories for Load-Induced Fatigue

Description	Category	Constant A (ksi^3)	Threshold $(\Delta f)_{TH}$ ksi	Potential Crack Initiation Point	Illustrative Examples
Section 4—Welded Stiffener Connections (continued)					
4.3 Base metal at the termination of longitudinal stiffener-to-web or longitudinal stiffener-to-box flange welds:					
With the stiffener attached by fillet welds and with no transition radius provided at the termination:				In the primary member at the end of the weld at the weld toe	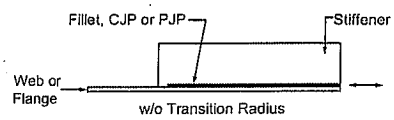
Stiffener thickness < 1.0 in.	E	11×10^8	4.5		
Stiffener thickness ≥ 1.0 in.	E′	3.9×10^8	2.6		
With the stiffener attached by welds and with a transition radius R provided at the termination with the weld termination ground smooth:					
$R \geq 24$ in.	B	120×10^8	16	In the primary member near the point of tangency of the radius	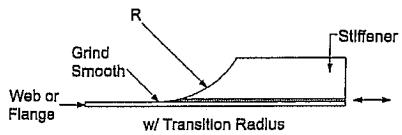
24 in. > $R \geq 6$ in.	C	44×10^8	10		
6 in. > $R \geq 2$ in.	D	22×10^8	7		
2 in. > R	E	11×10^8	4.5		
Section 5—Welded Joints Transverse to the Direction of Primary Stress					
5.1 Base metal and weld metal in or adjacent to complete joint penetration groove welded butt splices, with weld soundness established by NDT and with welds ground smooth and flush parallel to the direction of stress. Transitions in thickness or width shall be made on a slope no greater than 1:2.5 (see also Figure 6.13.6.2-1).				From internal discontinuities in the filler metal or along the fusion boundary or at the start of the transition	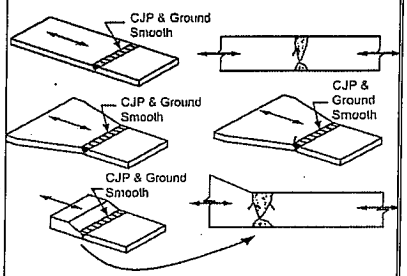
$F_y < 100$ ksi	B	120×10^8	16		
$F_y \geq 100$ ksi	B′.	61×10^8	12		
5.2 Base metal and weld metal in or adjacent to complete joint penetration groove welded butt splices, with weld soundness established by NDT and with welds ground parallel to the direction of stress at transitions in width made on a radius of not less than 2 ft with the point of tangency at the end of the groove weld (see also Figure 6.13.6.2-1).	B	120×10^8	16	From internal discontinuities in the filler metal or discontinuities along the fusion boundary	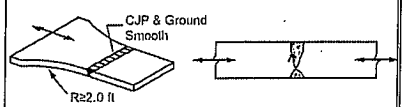

continued on next page

Table 6.6.1.2.3-1 (continued)—Detail Categories for Load-Induced Fatigue

Description	Category	Constant A (ksi^3)	Threshold $(\Delta f)_{TH}$ ksi	Potential Crack Initiation Point	Illustrative Examples
5.3 Base metal and weld metal in or adjacent to the toe of complete joint penetration groove welded T or corner joints, or in complete joint penetration groove welded butt splices, with or without transitions in thickness having slopes no greater than 1:2.5 when weld reinforcement is not removed. (Note: cracking in the flange of the "T" may occur due to out-of-plane bending stresses induced by the stem).	C	44×10^8	10	From the surface discontinuity at the toe of the weld extending into the base metal or along the fusion boundary	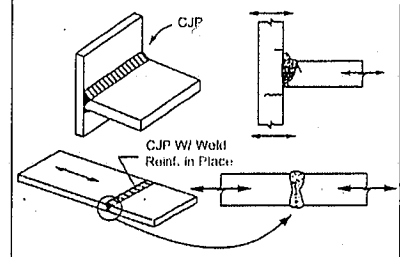
5.4 Base metal and weld metal at details where loaded discontinuous plate elements are connected with a pair of fillet welds or partial joint penetration groove welds on opposite sides of the plate normal to the direction of primary stress.	C as adjusted in Eq. 6.6.1.2.5-4	44×10^8	10	Initiating from the geometrical discontinuity at the toe of the weld extending into the base metal or initiating at the weld root subject to tension extending up and then out through the weld	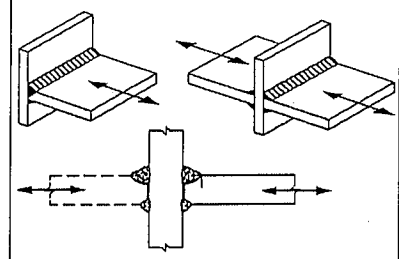
Section 6—Transversely Loaded Welded Attachments					
6.1 Base metal in a longitudinally loaded component at a transversely loaded detail (e.g. a lateral connection plate) attached by a weld parallel to the direction of primary stress and incorporating a transition radius R with the weld termination ground smooth.				Near point of tangency of the radius at the edge of the longitudinally loaded component or at the toe of the weld at the weld termination if not ground smooth	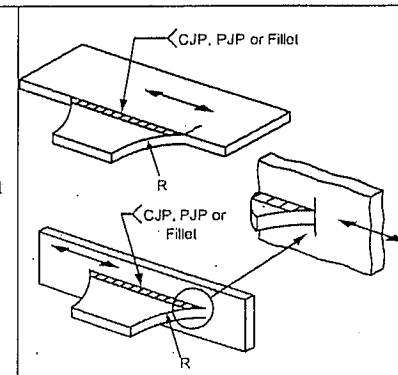
$R \geq 24$ in.	B	120×10^8	16		
24 in. > $R \geq 6$ in.	C	44×10^8	10		
6 in. > $R \geq 2$ in.	D	22×10^8	7		
2 in. > R	E	11×10^8	4.5		
For any transition radius with the weld termination not ground smooth (Note: Condition 6.2, 6.3 or 6.4, as applicable, shall also be checked.)	E	11×10^8	4.5		

continued on next page

Table 6.6.1.2.3-1 (continued)—Detail Categories for Load-Induced Fatigue

Description	Category	Constant A (ksi^3)	Threshold $(\Delta f)_{TH}$ ksi	Potential Crack Initiation Point	Illustrative Examples
Section 6—Transversely Loaded Welded Attachments (continued)					
6.2 Base metal in a transversely loaded detail (e.g. a lateral connection plate) attached to a longitudinally loaded component of equal thickness by a complete joint penetration groove weld parallel to the direction of primary stress and incorporating a transition radius R, with weld soundness established by NDT and with the weld termination ground smooth:					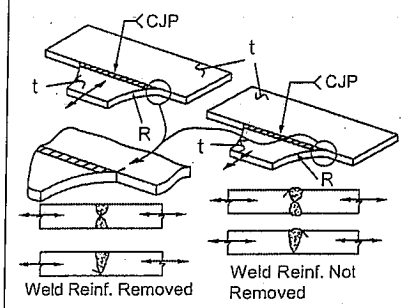
With the weld reinforcement removed:					
$R \geq 24$ in.	B	120×10^8	16	Near points of tangency of the radius or in the weld or at the fusion boundary of the longitudinally loaded component or the transversely loaded attachment	
24 in. > $R \geq 6$ in.	C	44×10^8	10		
6 in. > $R \geq 2$ in.	D	22×10^8	7		
2 in. > R	E	11×10^8	4.5		
With the weld reinforcement not removed:				At the toe of the weld either along the edge of the longitudinally loaded component or the transversely loaded attachment	
$R \geq 24$ in.	C	44×10^8	10		
24 in. > $R \geq 6$ in.	C	44×10^8	10		
6 in. > $R \geq 2$ in.	D	22×10^8	7		
2 in. > R	E	11×10^8	4.5		
(Note: Condition 6.1 shall also be checked.)					
6.3 Base metal in a transversely loaded detail (e.g. a lateral connection plate) attached to a longitudinally loaded component of unequal thickness by a complete joint penetration groove weld parallel to the direction of primary stress and incorporating a weld transition radius R, with weld soundness established by NDT and with the weld termination ground smooth:				At the toe of the weld along the edge of the thinner plate In the weld termination of small radius weld transitions At the toe of the weld along the edge of the thinner plate	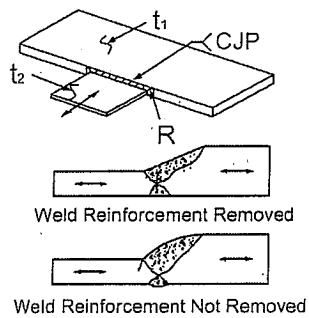
With the weld reinforcement removed:					
$R \geq 2$ in.	D	22×10^8	7		
$R < 2$ in.	E	11×10^8	4.5		
For any weld transition radius with the weld reinforcement not removed (Note: Condition 6.1 shall also be checked.)	E	11×10^8	4.5		

continued on next page

Table 6.6.1.2.3-1 (continued)—Detail Categories for Load-Induced Fatigue

Description	Category	Constant A (ksi^3)	Threshold $(\Delta f)_{TH}$ ksi	Potential Crack Initiation Point	Illustrative Examples
Section 6—Transversely Loaded Welded Attachments (continued)					
6.4 Base metal in a transversely loaded detail (e.g. a lateral connection plate) attached to a longitudinally loaded component by a fillet weld or a partial joint penetration groove weld, with the weld parallel to the direction of primary stress (Note: Condition 6.1 shall also be checked.)	See Condition 5.4				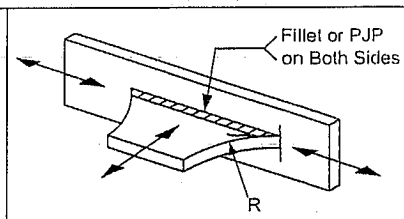
Section 7—Longitudinally Loaded Welded Attachments					
7.1 Base metal in a longitudinally loaded component at a detail with a length L in the direction of the primary stress and a thickness t attached by groove or fillet welds parallel or transverse to the direction of primary stress where the detail incorporates no transition radius:				In the primary member at the end of the weld at the weld toe	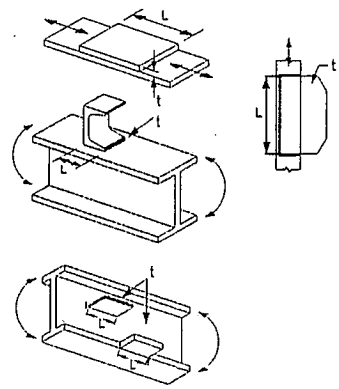
$L < 2$ in.	C	44×10^8	10		
2 in. $\leq L \leq 12t$ or 4 in	D	22×10^8	7		
$L > 12t$ or 4 in.					
$t < 1.0$ in.	E	11×10^8	4.5		
$t \geq 1.0$ in.	E′	3.9×10^8	2.6		
(Note: see Condition 7.2 for welded angle or tee section member connections to gusset or connection plates.)					
7.2 Base metal in angle or tee section members connected to a gusset or connection plate by longitudinal fillet welds along both sides of the connected element of the member cross-section. The fatigue stress range shall be calculated on the effective net area of the member, $A_e = UA_g$, in which $U = (1 - \bar{x}/L)$ and where A_g is the gross area of the member. $\bar{x}$ is the distance from the centroid of the member to the surface of the gusset or connection plate and L is the maximum length of the longitudinal welds. The effect of the moment due to the eccentricities in the connection shall be ignored in computing the stress range (McDonald and Frank, 2009).	E	11×10^8	4.5	Toe of fillet welds in connected element	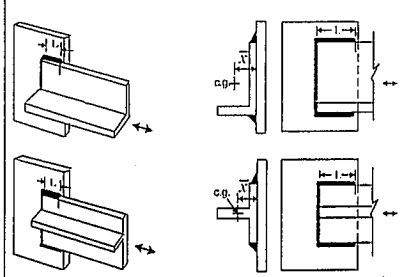

continued on next page

Table 6.6.1.2.3-1 (continued)—Detail Categories for Load-Induced Fatigue

Description	Category	Constant A (ksi^3)	Threshold $(\Delta f)_{TH}$ ksi	Potential Crack Initiation Point	Illustrative Examples
Section 8—Miscellaneous					
8.1 Rib to Deck Weld—One-sided 80% (70% min) penetration weld with root gap ≤ 0.02 in. prior to welding Allowable Design Level 1, 2, or 3	C	44×10^8	10	See Figure	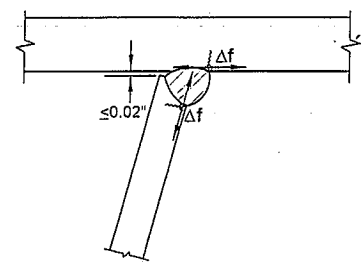
8.2 Rib Splice (Welded)—Single groove butt weld with permanent backing bar left in place. Weld gap > rib wall thickness Allowable Design Level 1, 2, or 3	D	22×10^8	7	See Figure	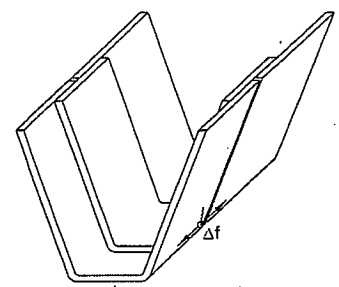
8.3 Rib Splice (Bolted)—Base metal at gross section of high strength slip critical connection Allowable Design Level 1, 2, or 3	B	120×10^8	16	See Figure	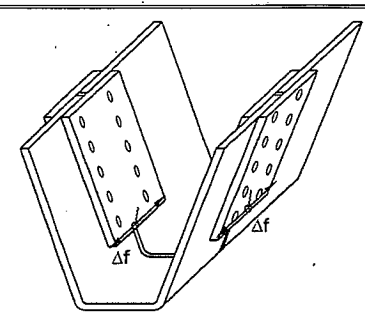
8.4 Deck Plate Splice (in Plane)—Transverse or Longitudinal single groove butt splice with permanent backing bar left in place Allowable Design Level 1, 2, or 3	D	22×10^8	7	See Figure	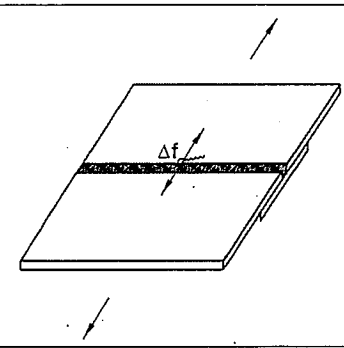
8.5 Rib to FB Weld (Rib)—Rib wall at rib to FB weld (fillet or CJP) Allowable Design Level 1, 2, or 3	C	44×10^8	10	See Figure	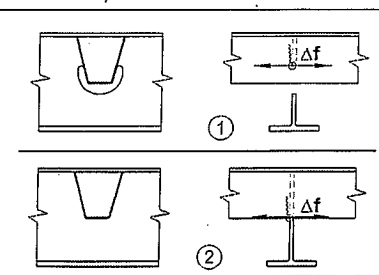

continued on next page

Table 6.6.1.2.3-1 (continued)—Detail Categories for Load-Induced Fatigue

Description	Category	Constant A (ksi^3)	Threshold $(\Delta f)_{TH}$ ksi	Potential Crack Initiation Point	Illustrative Examples
8.6 Rib to FB Weld (FB Web)—FB web at rib to FB weld (fillet, PJP, or CJP) Allowable Design Level 1 or 3	C (see Note 1)	44×10^8	10	See Figure	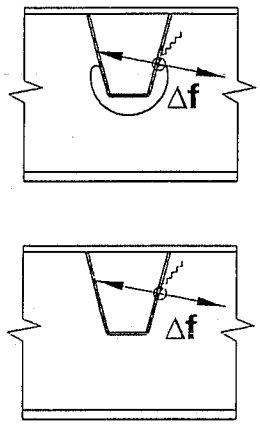
8.7 FB Cutout—Base metal at edge with "smooth" flame cut finish as per AWS D1.5 Allowable Design Level 1 or 3	A	250×10^8	24	See Figure	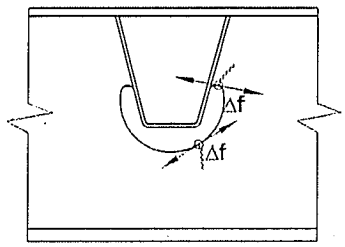
8.8 Rib Wall at Cutout—Rib wall at rib to FB weld (fillet, PJP, or CJP) Allowable Design Level 1 or 3	C	44×10^8	10	See Figure	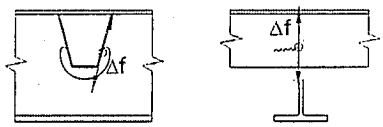
8.9 Rib to Deck Plate at FB Allowable Design Level 1 or 3	C	44×10^8	10	See Figure	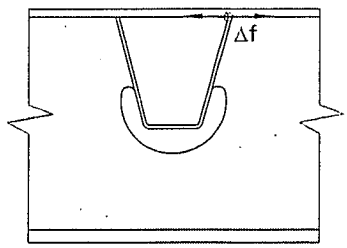
Note 1: Where stresses are dominated by in-plane component at fillet or PJP welds, Eq. 6.6.1.2.5-4 shall be considered. In this case, Δf should be calculated at the mid-thickness and the extrapolation procedure as per Article 9.8.3.4.3 need not be applied.					
Section 9—Miscellaneous					
9.1 Base metal at stud-type shear connectors attached by fillet or automatic stud welding		44×10^8	10	At the toe of the weld in the base metal	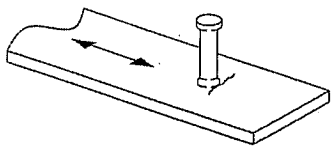

continued on next page

Table 6.6.1.2.3-1 (continued)—Detail Categories for Load-Induced Fatigue

Description	Category	Constant A (ksi^3)	Threshold $(\Delta F)_{TH}$ ksi	Potential Crack Initiation Point	Illustrative Examples
Section 9—Miscellaneous (continued)					
9.2 Nonpretensioned high-strength bolts, common bolts, threaded anchor rods, and hanger rods with cut, ground, or rolled threads. Use the stress range acting on the tensile stress area due to live load plus prying action when applicable.				At the root of the threads extending into the tensile stress area	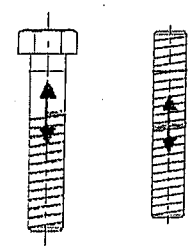
(Fatigue II) Finite Life	E′	3.9×10^8	N/A		
(Fatigue I) Infinite Life	D	N/A	7		

Table 6.6.1.2.3-2—75-yr $(ADTT)_{SL}$ Equivalent to Infinite Life

Detail Category	75-yrs $(ADTT)_{SL}$ Equivalent to Infinite Life (trucks per day)
A	530
B	860
B′	1035
C	1290
C′	745
D	1875
E	3530
E′	6485

[*This page is intentionally left blank. —ed.*]

Appendix

A3-7 AASHTO/AWS D1.5 Bridge Welding Code

Section 6.7.6.2Yoke Lifting Requirements

AASHTO/AWS D1.5 Bridge Welding Code 2010, with 2011 and 2012 Interims

Lifting requirements for verification of proper current using the yoke method

6.7.6.2 The yoke method shall be performed in conformance with ASTM E 709, and the standard of acceptance shall be in conformance with 6.26.

(1) Testing by the yoke method shall be performed using half-wave rectified DC or AC DC, DC Pulsed, or AC.

(2) Electromagnetic yokes shall have lifting forces conforming to the following requirements:

Yoke Pole Leg Spacing (YPS), mm [in]		
Current Type	50 ≤ YPS < 100 [2 ≤ YPS < 4]	100 ≤ YPS< 150 [4 ≤ YPS ≤ 6]
AC	45 N [10 lb]	45 N [10 lb]
Half-Wave Rectified DC or DC Pulsed	135 N [30 lb]	225 N [50 lb]

Appendix

A3-8 IDOT Major Structures

Major Structures

In-depth Inspections by the Bureau of Bridges and Structures

District	Structure Number	Bridge Name	Feature Carried	Feature Crossed
1	099-0008	Smith	I-55 SB	Des Plaines R.
1	099-0009	Smith	I-55 NB	Des Plaines R.
1	099-0056	Des Plaines	I-80 EB	Des Plaines R.
1	099-0057	Des Plaines	I-80 WB	Des Plaines R.
2	008-6000	Savanna-Sabula	US 52	Mississippi R.
2	081-0011	LeClaire	I-80	Mississippi R.
2	081-0106	Rock Island	I-280	Mississippi R.
2	081-9905	Centennial	US 67	Mississippi R.
2	098-6003	Gateway	US 30	Mississippi R.
3	032-0099	Morris	IL 47	Illinois R.
3	050-0237	Shippingsport	IL 351	Illinois R.
3	050-0070	Seneca	IL 170	Illinois R.
3	050-0079	Peru	IL 251	Illinois R.
3	050-0088	Utica	IL 178	Illinois R.
3	050-0180	Veterans Memorial/Ottawa	IL 23 & 71	Illinois R.
3	050-0191	A. Lincoln Memorial	I-39, US 51	Illinois R.
3	050-0219	Marseilles	CH 15	Illinois R.
3	078-0001	Hennepin	I-180	Illinois R.
3	078-0006	Spring Valley	IL 89	Illinois R.
4	062-0003	Lacon	IL 17	Illinois R.
4	062-0036	Henry	IL 18	Illinois R.
4	063-0002	Scott Lucas/Havana	US 136	Illinois R.
4	090-0001	Murray Baker	I-74	Illinois R.
4	090-0030	Cedar Street	IL 8, 29 & 116	Illinois R.
4	090-0070	McCluggage (old)	US 24 & 150 EB	Illinois R.
4	090-0108	Shade-Lohmann	I-474 EB	Illinois R.
4	090-0109	Shade-Lohmann	I-474 WB	Illinois R.
4	090-0114	John T. McNaughton/Pekin	IL 9	Illinois R.
4	090-0115	McCluggage (new)	US 24 & 150 WB	Illinois R.
4	090-0122	Bob Michel	Franklin Street	Illinois R.
6	001-0019	Quincy Memorial	US 24 EB	Mississippi R.
6	001-0068	Quincy Bayview	US 24 WB	Mississippi R.
6	009-0001	Beardstown	US 67 & IL 100	Illinois R.
6	034-0062	Keokuk-Hamilton	US 136	Mississippi R.
6	069-0016	Meredosia	IL 104	Illinois R.
6	075-0122	Valley City Eagle	I-72 EB	Illinois R.
6	075-0123	Valley City Eagle	I-72 WB	Illinois R.
6	086-0001	Florence	IL 100 & 106	Illinois R.
7	058-0120	William B. Sands Memorial	IL 121	N&W Railroad
7	093-0021	Mt. Carmel	IL 15	Wabash R.
8	031-0001	Joe Page	IL 100	Illinois R.
8	060-0035	Chain of Rocks	I-270	Mississippi R.
8	060-0036	Chain of Rocks Canal	I-270 EB	Chain of Rocks Canal
8	060-0037	Chain of Rocks Canal	I-270 WB	Chain of Rocks Canal
8	060-0255	Clark	US 67	Mississippi R.
8	060-6002	McKinley	Salisbury Street	Mississippi R.

District	Structure Number	Bridge Name	Feature Carried	Feature Crossed
8	082-6001	Martin Luther King Memorial	M. L. King Mem.	Mississippi R.
9	002-0005	Old Cairo	US 60 & 62	Mississippi R.
9	002-0022	New Cairo	I-57	Mississippi R.
9	064-0035	Metropolis-Paducah	I-24	Ohio R.
9	097-0003	Grayville	I-64 EB	Wabash R.
9	097-0004	Grayville	I-64 WB	Wabash R.

Appendix

A3-9 BridgeWatch User Manual

BridgeWatch

Overview:

BridgeWatch® is a real-time, web-based, bridge monitoring software application developed by USEngineering Solutions to afford transportation officials and asset managers an early warning of hazards to their bridge infrastructure. BridgeWatch collects real-time data from sources such as the NWS, NOAA, NRCS, and USGS to compare against client-specified thresholds and will send alert notifications if any thresholds are exceeded. Alert notifications are distributed immediately via electronic mediums (email/sms/fax, etc.) and clients can login to BridgeWatch for a command-and-control view of their data, infrastructure, geography, and alert specifics to respond according to their Plans of Action (POAs).

Interface:

BridgeWatch offers an intuitive interface for users to view and interact with information. The interface consists of:

1) **Watch List**: The Watch List displays structures experiencing alert conditions. Users can select structures from the list to view alert details.

2) **Geography Filter**: Users can interact with the Geo-Spatial Display to view general areas and structures in each area utilizing the series of drop-down menus.

3) **Search Tool:** The Search Tool enables users to query for structures, gages, or user profiles.

4) **Data Sources**: The Data Sources buttons enable users to select information about structures, users, and official real-time meteorological, hydrologic and seismologic sources.

5) **Informational Display**: The Informational Display is used to publish detailed information about individual structures, profiles, or gages. Detailed information is displayed in a tabular format for ease of user interaction.

6) **Geo-Spatial Display**: The Geo-Spatial Display allows users to interact with static geographic boundaries such as towns, counties, political boundaries, watersheds, basins-of-influence, or any other user defined areas. Dynamic data sets such as real-time meteorological, hydrologic and seismologic overlays can also be displayed.

7) **Admin Interface**: Users who have administrative privileges are able to access the system's Admin Interface. This interface is partitioned into three categories: Management, Notification, and Simulation. Within each respective category, users can manage profiles, create reports, and access archived data. Users can also simulate training alerts and broadcast real-time messages to others.

©2012 All Rights Reserved

Interface:

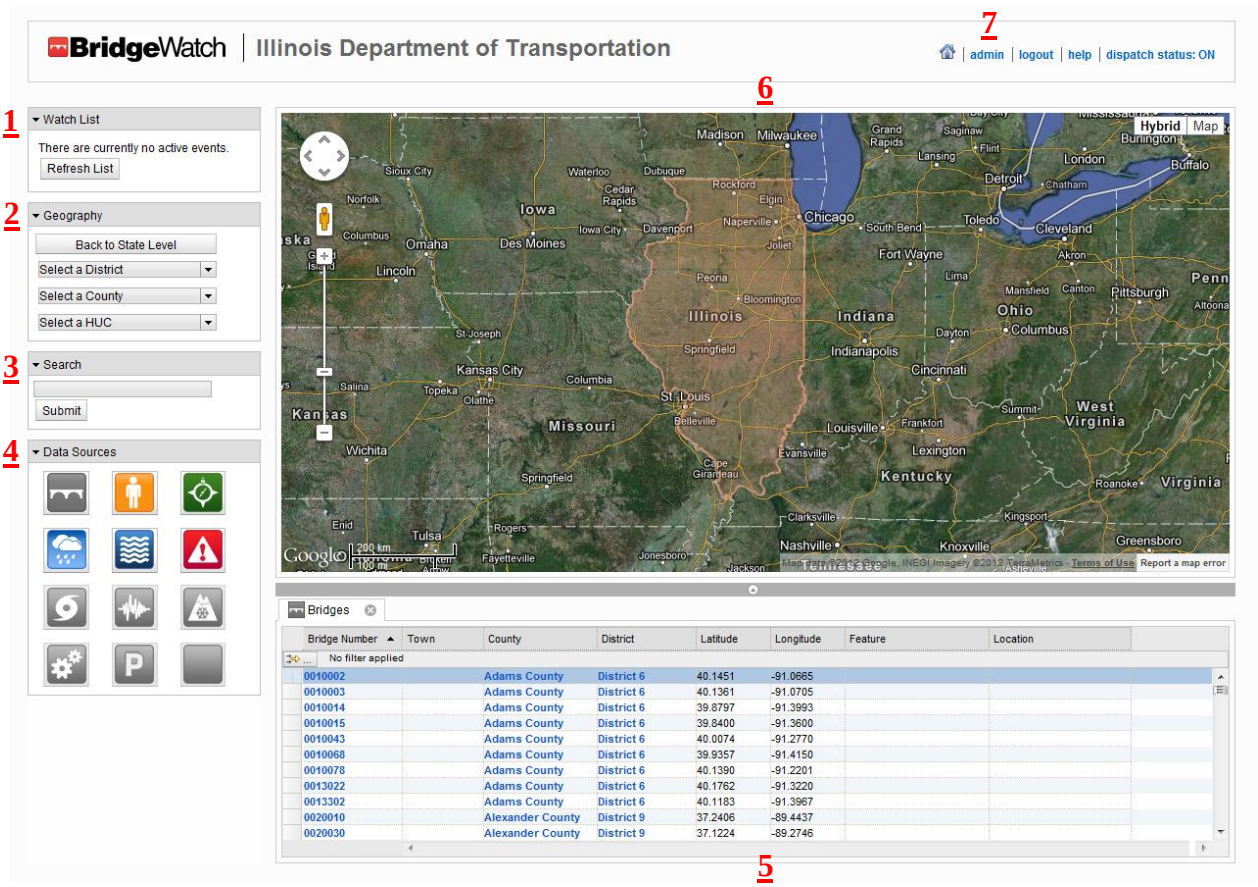

Data Tabs:

Data becomes visible through a series of detail screens in tabular format once a user selects a structure via the Geo-Spatial Display, Geography Filter, Search Tool, Structures, or Navigation Data Source buttons. Options will also appear to allow for zooming to the specifics of each structure and for displaying basins-of-influence.

A structure detail screen consists of a series of five tabs (General, Data Sources, File, Alerts and Tickets). Below is an example of the “General” tab highlighting database information for a particular bridge.

©2012 All Rights Reserved

General Tab:

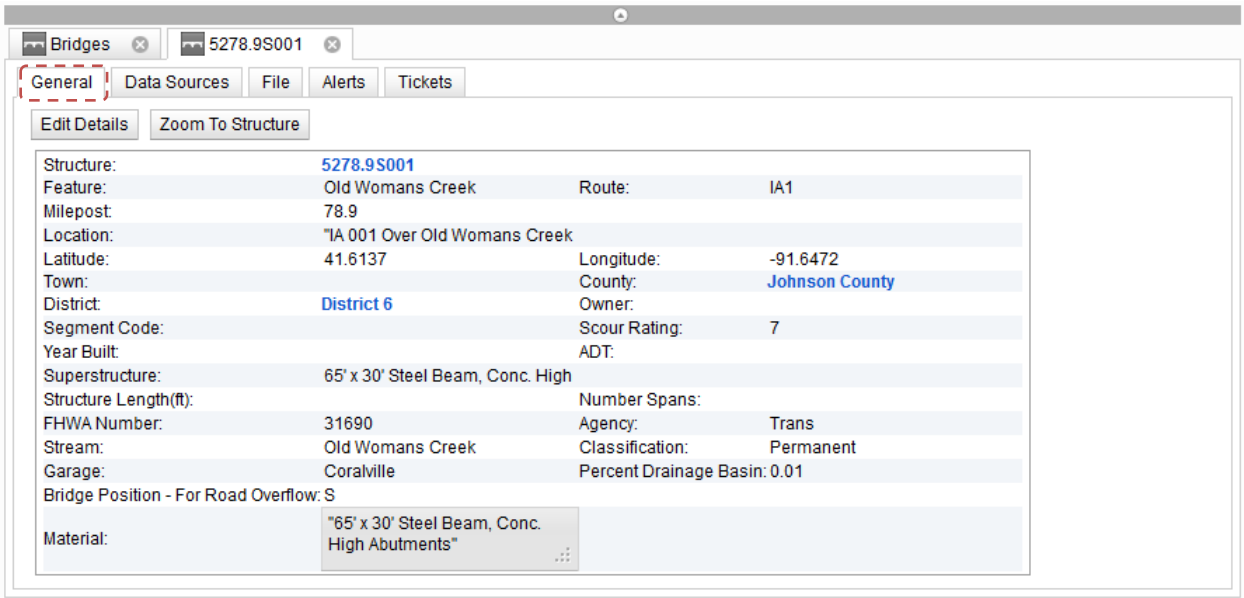

The “Data Sources” tab allows the user to display USGS gages and NOAA/NWS NEXRAD stations that are associated with the selected structure. Users can access sub-tabs and select data sources to obtain real-time information and thresholds related to that structure. For example, once a USGS gage is selected, users can view current hydrographs for discharge and height measurements, view peak discharge values, and display the list of structures that have been related to the gage.

Data Sources Tab:

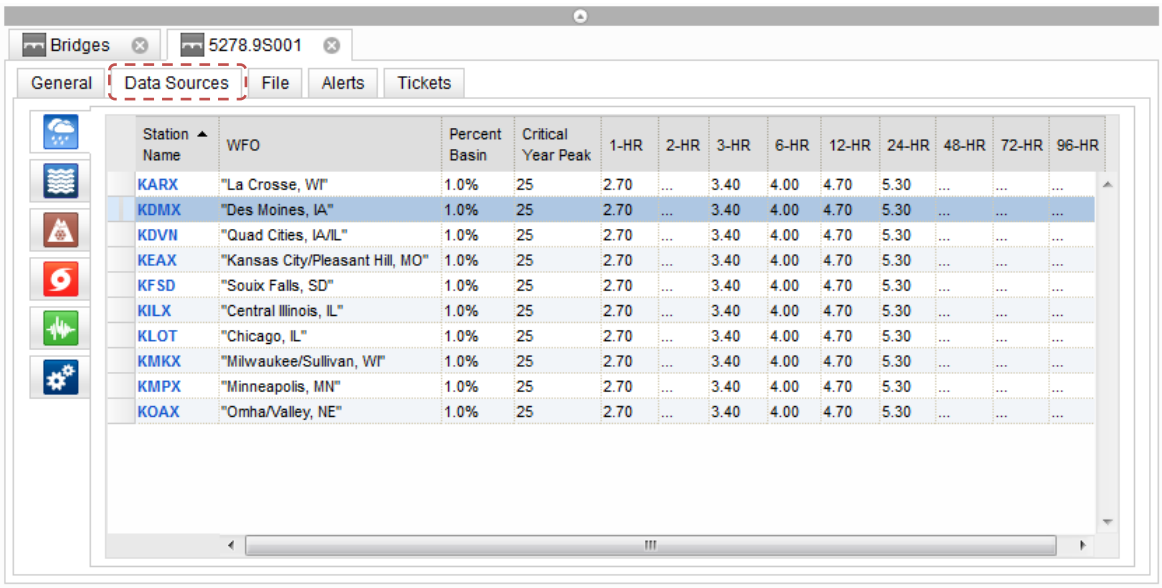

Station Name	WFO	Percent Basin	Critical Year Peak	1-HR	2-HR	3-HR	6-HR	12-HR	24-HR	48-HR	72-HR	96-HR
KARX	"La Crosse, WI"	1.0%	25	2.70	...	3.40	4.00	4.70	5.30	...	...	...
KDMX	"Des Moines, IA"	1.0%	25	2.70	...	3.40	4.00	4.70	5.30	...	...	...
KDVN	"Quad Cities, IA/IL"	1.0%	25	2.70	...	3.40	4.00	4.70	5.30	...	...	...
KEAX	"Kansas City/Pleasant Hill, MO"	1.0%	25	2.70	...	3.40	4.00	4.70	5.30	...	...	...
KFSD	"Souix Falls, SD"	1.0%	25	2.70	...	3.40	4.00	4.70	5.30	...	...	...
KILX	"Central Illinois, IL"	1.0%	25	2.70	...	3.40	4.00	4.70	5.30	...	...	...
KLOT	"Chicago, IL"	1.0%	25	2.70	...	3.40	4.00	4.70	5.30	...	...	...
KMKX	"Milwaukee/Sullivan, WI"	1.0%	25	2.70	...	3.40	4.00	4.70	5.30	...	...	...
KMPX	"Minneapolis, MN"	1.0%	25	2.70	...	3.40	4.00	4.70	5.30	...	...	...
KOAX	"Omha/Valley, NE"	1.0%	25	2.70	...	3.40	4.00	4.70	5.30	...	...	...

©2012 All Rights Reserved

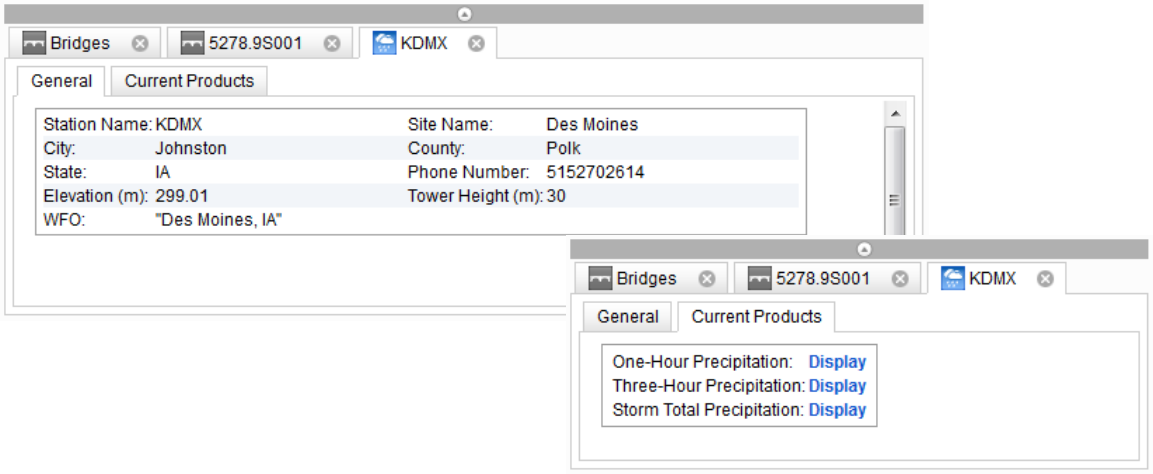

Tabs also delineate data where documents, alerts, tickets, and even navigational information can be viewed, stored, and updated. Users can select the "File" tab to access sub-tabs containing Images, Inspection Reports, Plans of Action (POAs), Site Plans, and any other supported files. Each document can be viewed within the informational display area by clicking on the "Show" button.

File Tab:

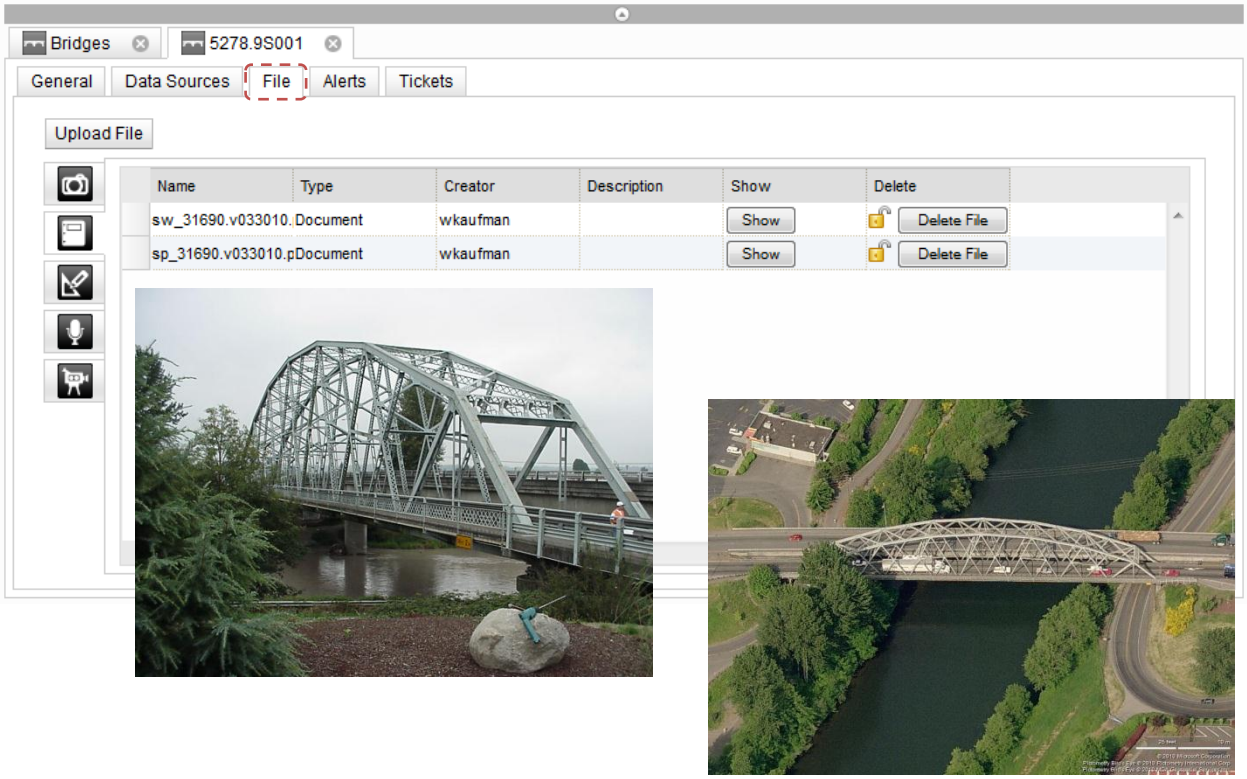

©2012 All Rights Reserved

To add files to data tabs:

1) Select the “Upload File” button
2) Name the file
3) Select “Type”
4) Give a Description of the file
5) Select “Browse” and find the file to upload
6) Select “Upload” and the file will be uploaded to the server.

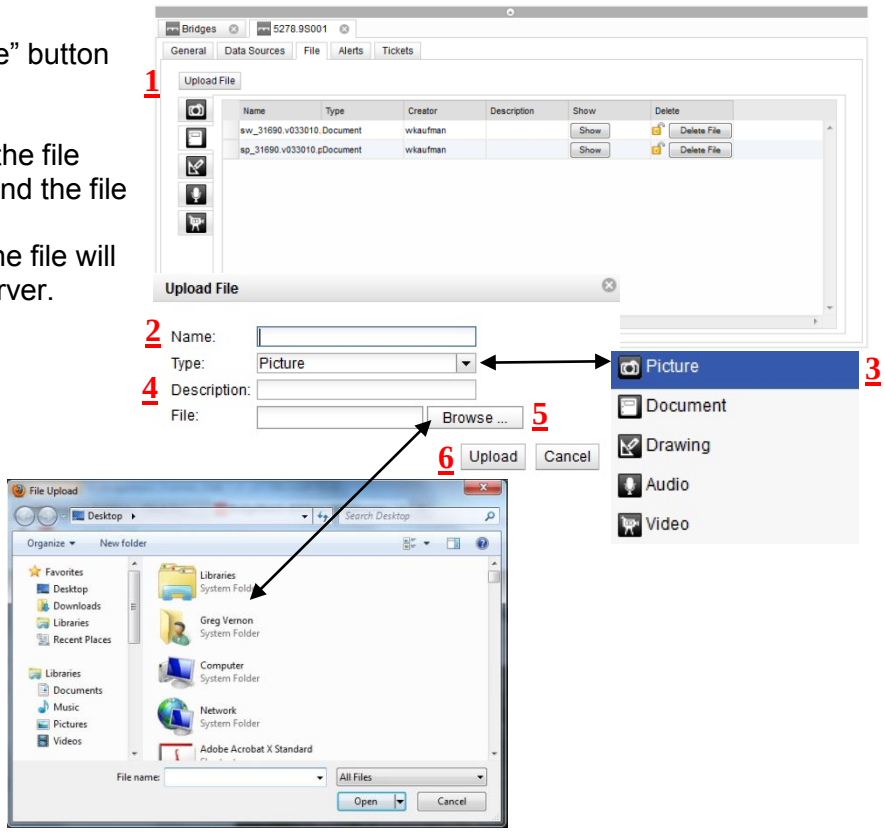

Alerts are documented and stored in the “Alerts” tab when an alert is triggered. Users can view alert history for radars, gages, devices, and simulations. Users can also overlay radar alerts on the Geo-spatial Display. An active alert will be represented in the Geo-Spatial Display with a red bridge icon.

Alerts Tab:

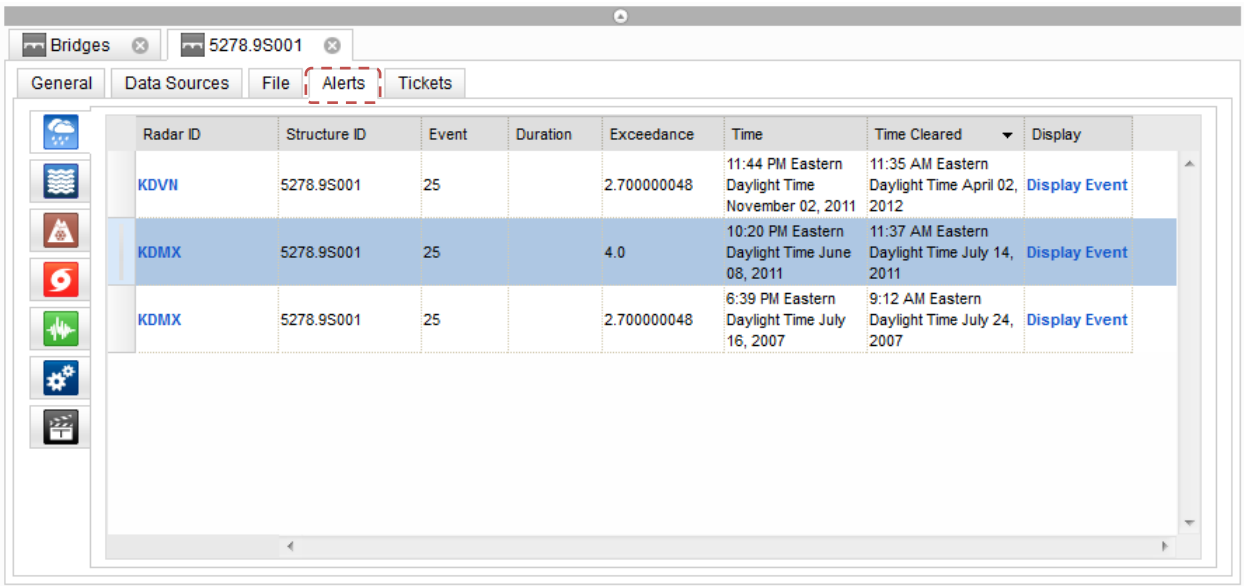

©2012 All Rights Reserved

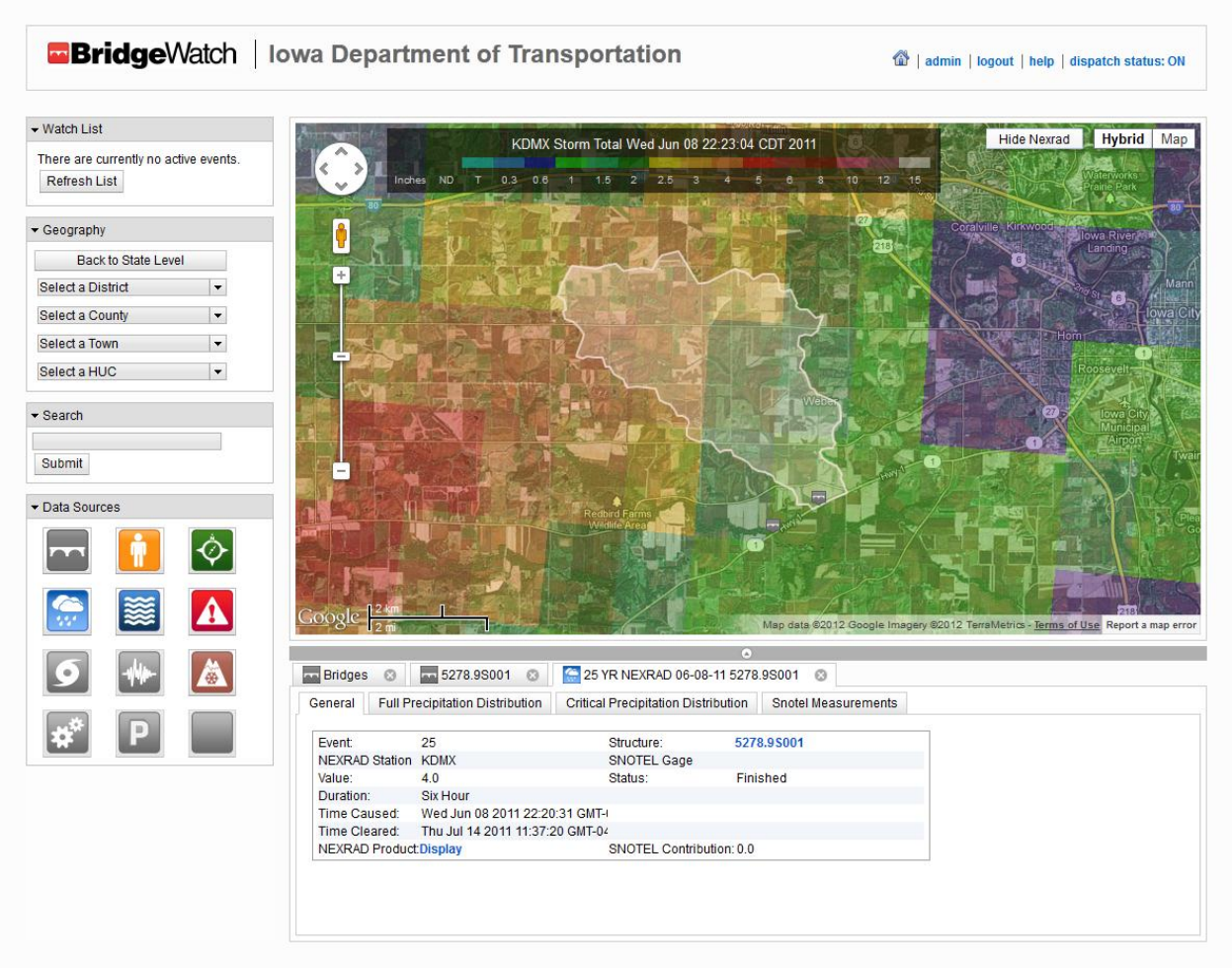

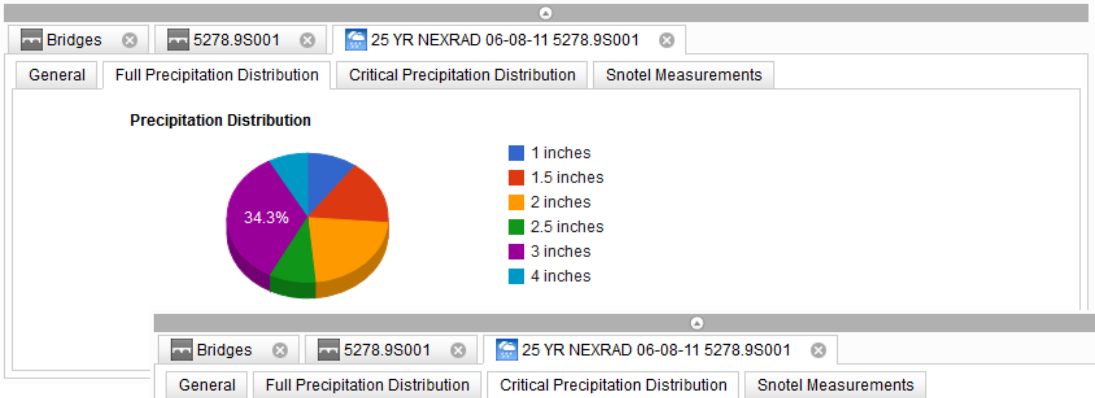

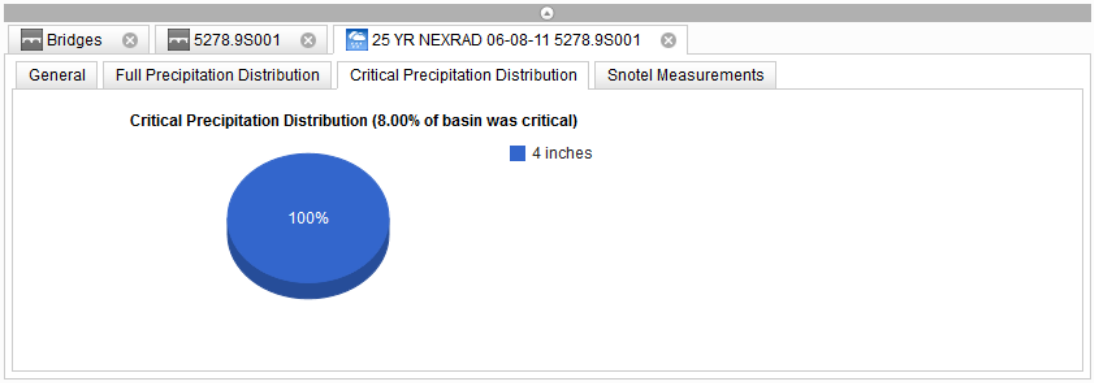

©2012 All Rights Reserved

The “Tickets” tab allows users to document the condition and status of structures. Users initiate tickets by choosing one of five types: Information, Maintenance, Inspection, Monitor, or Closure. Once the type of ticket has been selected, the user fills out the ticket, adds an attachment, and can even select other users to whom the ticket will be distributed. Once submitted, the ticket is considered to be open and will be represented on the map with a color-coded status to enable users to quickly identify the progression to their Plan of Action (POA). A ticket will remain open until the author of the ticket or an administrator closes it.

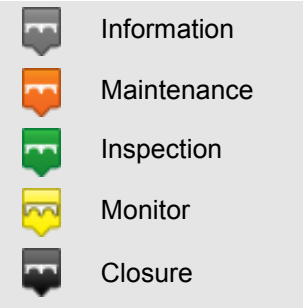

Tickets Tab:

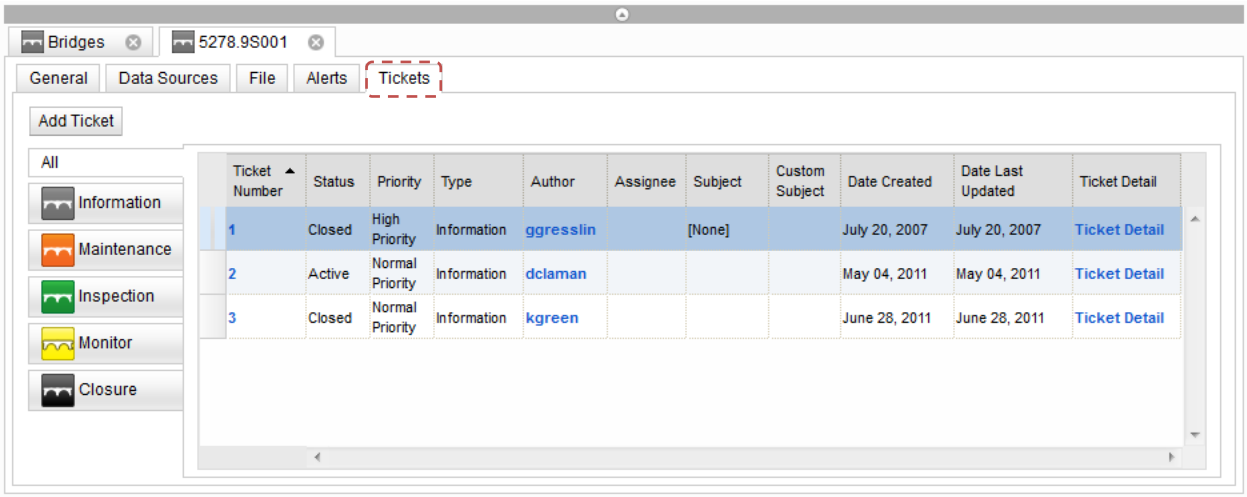

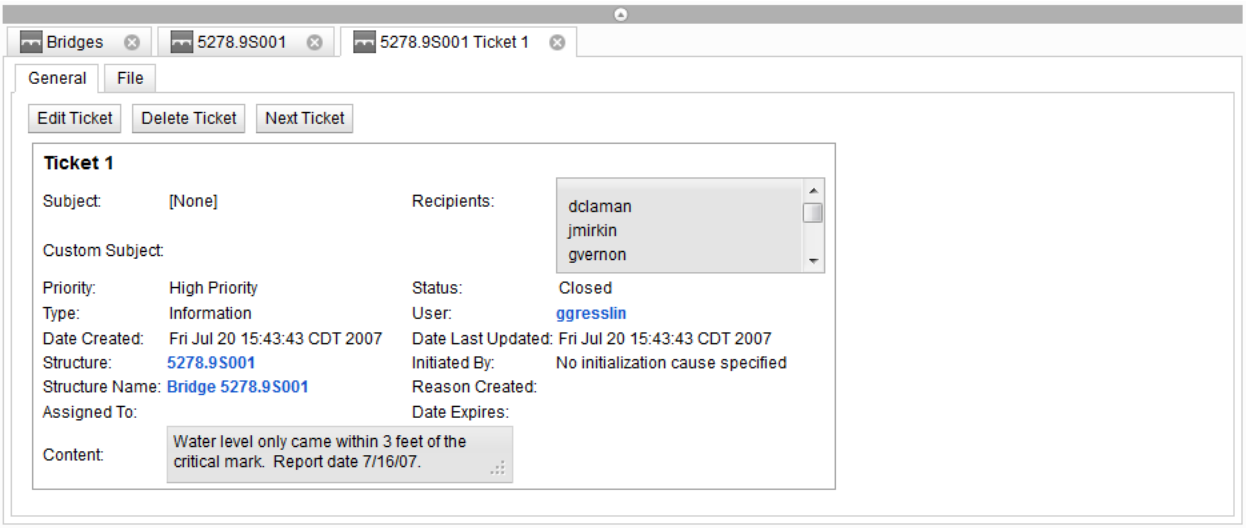

©2012 All Rights Reserved

Data Sources:

The Data Sources window has several selectable buttons with logical icons representing their respective data source. Users can choose the respective data source layer to overlay on the Geo-Spatial Display by selecting the corresponding button.

The **Structure** button allows the user to view all of the structures and query a bridge by primary identification number, county, and region.

The **User** button enables users to display a list of other users and their contact information. By clicking on a username hyperlink, the profile belongin to that username appears with the username, assigned area, contacts and subscriptions. Users have the ability to edit their individual profile through the interface.

The **Navigation** button provides users with an easy way to navigate between sites and addresses. The display allows users to select their starting point, destination, and whether they want to view the directions within the system, on Google Maps or Bing Maps. Directions are generated once the “Get Directions” button has been selected.

The **NEXRAD** button enables users to perform a real-time meteorological review. Users can select local NWS radar sites and one of the three precipitation products to overlay. These products are the one hour, three hour, and storm total accumulated precipitation estimates.

Users can perform a real-time hydrologic review using USGS streamflow data. When the **USGS** button is selected, users are able to view gages and structures within hydrologic units or query gage sites for the current discharge and height measurements.

The **NWS Warnings** button enables users to view active system-aggregated NWS products such as Flash Flood (FFW) and Flood Warnings (FLW).

NRCS snow data is available when users select the **SNOTEL** button. Users can interact and query SNOTEL sites to review precipitation, accumulated precipitation, snow-to-water equivalency, and temperature.

The **SLOSH** button allows users to overlay NOAA storm surge data over coastlines. Probabilistic storm surge for impending tropical systems can also be displayed.

©2012 All Rights Reserved

The **Seismic** button enables users to view seismic data from USGS and visualize energy propagation within the Geo-Spatial Display.

The **Devices** button enables users to view monitoring instruments that are specific to the client.

Admin Interface:

Users with administrative privileges are able to utilize advanced features for managing and querying data through the Admin Interface. This interface is partitioned into three categories: Management, Notification, and Simulation. Within each respective category, users can manage profiles, create reports, and access archived data. Users can also simulate training alerts and broadcast real-time messages to others.

Management:

Management provides administrators with the capability to add new users, edit existing profiles, or delete individuals. Administrators can use this feature to easily update contact information and alerts subscriptions.

Notification:

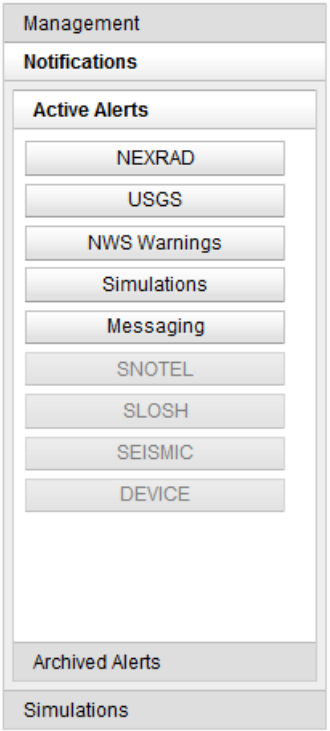

The majority of the Notification group contains all active and archived alerts that are processed by BridgeWatch. Notification also offers interactive features such as messaging.

“Active Alerts” provides administrators the ability to view all NEXRAD, USGS, NWS Warnings, or Simulated Events. With this function, administrators can simultaneously view, document, and close individual or multiple structure alerts.

The “Archived Alerts” provides administrators the ability to view all inactive NEXRAD, USGS, and NWS Warnings and display a history of all alerts that have occurred over the life of the system. Data is displayed in tabular format and can be exported to an Excel® file with a single click.

“Messaging” allows an administrator to quickly distribute information to other users. Administrators can quickly select individual or multiple users, the form of contact (email, sms, fax,

©2012 All Rights Reserved

etc.) and submit for instant delivery.

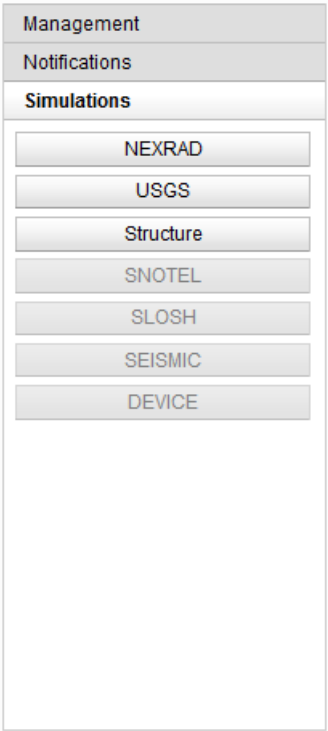

Simulation:

The Simulation “NEXRAD,” “USGS,” and “Structure” buttons are selected when a user wants to conduct training sessions. Administrators can create a simulated NEXRAD, USGS, or Structure event to test the effectiveness of current Plans of Action (POAs), inspection team response, and/or visualize influence of data source-driven events.

©2012 All Rights Reserved

Appendix

A3-10 Bridge File Organization and Checklist

Note: AASHTO is currently updating the Manual for Bridge evaluation (MBE). This Appendix will be updated when the new MBE is published.

Appendix

A3-11 FHWA 23 Metrics Guidelines

III. Compliance Metrics and Assessment Levels

<u>Metric #1:</u> 23 CFR 650.307 Bridge inspection organization

650.307 (a), (c), (d) & (e) – Bridge inspection organization
Does the State transportation department have an organization that inspects or causes to be inspected, all highway bridges on public roads, except for bridges that are owned by Federal agencies?

Compliance (C): Yes.

Substantial Compliance (SC): Organizational roles and responsibilities are not clearly defined and documented for all criteria, even if the program is functioning consistently as assessed by the additional 22 metrics. State has a designated Program Manager that has been delegated the responsibility for the NBIS.

Non-Compliance (NC): Organizational roles and responsibilities are not clearly defined and documented. State does not have a designated Program Manager that has been delegated the responsibility for the NBIS.

Conditional Compliance (CC): Adhering to approved plan of corrective action.

Criteria: There are clearly defined and documented organizational roles and responsibilities for each of the following that are functioning as assessed by the additional 22 metrics: Bridge inspection policies and procedures, Quality control and quality assurance, Preparation and maintenance of a bridge inventory, Bridge inspections, Reports, Load ratings, Delegation of authority policies and procedures.

State transportation department has an organization as described by the AASHTO MBE.

Assessment Levels

Minimum: Based on Division Office Bridge staff's knowledge and awareness of Agency's bridge inspection program.

Intermediate: Verify delegation procedures exist and are being monitored. Verify that policies exist and roles/responsibilities are understood.

In-depth: Same as intermediate. Verification involves interviews with personnel and sampling of policies and procedures to see if they are being followed. Includes field and file review.

<u>Metric #2:</u> 23 CFR 650.309 Qualifications of personnel – Program Manager

650.309 (a) - Program Manager:
Does the Program Manager meet the requirements in paragraphs 650.309 (a) & 650.313 (g)?

Compliance (C): Yes.

Substantial Compliance (SC): If needed, Program Manager is scheduled for comprehensive bridge inspection training within next 12 months. If needed, periodic bridge inspection refresher training as defined by a State's Quality Control/Quality Assurance (QC/QA) program to be completed by Program Manager within next 12 months.

Non-Compliance (NC): No.

Conditional Compliance (CC): Adhering to approved plan of corrective action.

Criteria: PE registration or ten years of bridge inspection experience and successfully completed an FHWA approved comprehensive bridge inspection training and periodic bridge inspection refresher training. Refer to the NBIS Q&A website for Program Manager guidance.

Assessment Levels

Minimum: Based on Division Office Bridge staff's knowledge and awareness of Program Manager.

Intermediate: Verify qualifications of Program Manager through interview.

In-depth: Verify qualifications of Program Manager through interview and review of documented qualifications.

<u>Metric #3:</u> 23 CFR 650.309 Qualifications of personnel – Team Leader(s)

650.309 (b) - Team leader(s)
Do the Team Leaders meet the requirements in paragraph 650.309 (b) & 650.313 (g)?

Compliance (C): Yes.

Substantial Compliance (SC): Team Leaders who have not had periodic bridge inspection refresher training as defined in a State's QC/QA program are scheduled to complete the training within the next 12 months.

Non-Compliance (NC): No.

Conditional Compliance (CC): Adhering to approved plan of corrective action.

Criteria: (1) PE registration; or (2) five years of bridge inspection experience; or (3) NICET Level III or IV Bridge Safety Inspector; or (4) Bachelor's degree in engineering from ABET accredited college or university, successfully passed the Fundamentals of Engineering Exam, and two years of bridge inspection experience; or (5) Associate Degree in engineering from ABET accredited college or university and four years of bridge inspection experience.

In addition to the above five criteria, the following two apply to all: successfully completed an FHWA approved comprehensive bridge inspection training and periodic bridge inspection refresher training.

Assessment Levels

Minimum: Based on Division Office Bridge staff's knowledge and awareness of Agency's process for monitoring Team Leader qualifications. Division has a current list of qualified team leaders from the program manager.

Intermediate: Review the current list of Team Leaders and their NBIS qualifications, including but not limited to dates of comprehensive and refresher training. If applicable, randomly sample using a MOE of 15% and a LOC of 80% and interview to assess qualifications of team leaders.

In-depth: Review the current list of all Team Leaders and their NBIS qualifications, including but not limited to dates of comprehensive and refresher training. Randomly sample using MOE of 15% and a LOC of 90% to verify qualifications of the Team Leaders through interviews including review of documented qualifications.

Note: For all assessment levels, enter total number of team leaders in reporting database.

<u>Metric #4:</u> 23 CFR 650.309 Qualifications of personnel – Load Rating Engineer

650.309 (c) - Individual Responsible for Load Ratings:
Does the individual responsible for load ratings meet the requirement of paragraph 650.309 (c)?

Compliance (C): Yes.

Substantial Compliance (SC): NA.

Non-Compliance (NC): No.

Conditional Compliance (CC): Adhering to approved plan of corrective action.

Criteria: PE registration.

Assessment Levels

Minimum: Based on Division Office Bridge staff's knowledge and awareness of individual responsible for load ratings.

Intermediate: Verify qualifications of individual responsible for load ratings at the State Transportation Department through interview. If applicable, randomly sample using a MOE of 15% and a LOC of 80% and interview to assess qualifications of individuals delegated the load rating function under 650.307(c).

In-depth: Verify qualifications of individual responsible for load ratings at the State Transportation Department through interview and review of documented qualifications. If applicable, randomly sample using a MOE of 15% and a LOC of 90% to interview and review documented qualifications to assess qualifications of individuals delegated the load rating function under 650.307(c).

<u>Metric #5:</u> 23 CFR 650.309 Qualifications of personnel – UW Bridge Inspection Diver

650.309 (d) - Underwater Bridge Inspection Diver:
Does the underwater bridge inspection diver(s) reviewed meet the requirements of paragraph 650.309 (d)?

Compliance (C): Yes.

Substantial Compliance (SC): NA.

Non-Compliance (NC): No.

Conditional Compliance (CC): Adhering to approved plan of corrective action.

Criteria: Successfully completed a FHWA approved comprehensive bridge inspection training course, or a FHWA approved underwater bridge inspection diver training course.

Assessment Levels

Minimum: Based on Division Office Bridge staff's knowledge and awareness of Agency's process for monitoring underwater bridge inspection diver qualifications. Division has a current list of underwater team leaders/inspectors including dates of comprehensive and refresher training.

Intermediate: Verify qualifications of a random sample using a MOE of 15% and a LOC of 80% and interview to assess qualifications from the current list of underwater team leaders/inspectors which may include supporting documentation.

In-depth: Verify qualifications of a random sample using a MOE of 15% and a LOC of 90% to interview and review qualifications from the current list of underwater team leaders/inspectors and supporting documentation.

<u>Metric #6:</u> Routine inspection frequency – Lower risk bridges* Metric revised 3/19/12

650.311 (a) – Routine inspections – Have lower risk bridges been inspected at regular intervals not to exceed (NTE) 24 months, or NTE 48 months when adhering to FHWA approved criteria?

Population: Lower risk bridges for the entire state or selected geographic/owner subset that are open to traffic, and whose inspection dates have changed since the previous year's State NBI submission or whose inspections are overdue. *Lower risk bridges are defined for this metric as those with superstructure and substructure, or culvert, condition ratings of fair or better, and not requiring state legal load restriction.

Compliance Levels

Compliance (C): All bridges in the population are inspected within the required NTE 24 or 48 month interval, as applicable, unless documented unusual circumstances have caused a 1-month delay for any inspections. All sampled 1-month delayed bridge inspections are documented for unusual circumstances.

Substantial Compliance (SC): At least 90% of bridges in the population are inspected within the required NTE 24 or 48 month interval plus one month, as applicable, and 100% are inspected within the required interval plus four months. All bridges with extended inspections conform to FHWA approved criteria.

Non-Compliance (NC): Substantial compliance criteria are not met.

Conditional Compliance (CC): Adhering to a FHWA approved plan of corrective action (PCA).

Criteria: Percent of lower risk bridges in the population that are inspected in accordance with the NTE 24 or 48 month interval.

Assessment Levels

Regardless of planned assessment level, review of this metric is progressive beginning with the Minimum level.

Minimum: If a PCA is currently in effect, monitor the PCA. Otherwise, review Metric 6 ART Report, which may require detailed examination and resolution of results as explained below. Review current list of bridges approved for extended interval, as applicable.

Where a SC snapshot is indicated in the Report and all bridges are inspected within a 25 or 49 month interval, as applicable, randomly sample bridges with 25 and 49 month intervals using Intermediate criteria and review for documentation of unusual circumstances. Where substantial changes in procedures have occurred that may reasonably show improved performance, consider supplemental analysis using current data as described in the Intermediate level.

Intermediate: Randomly sample bridges with inspections at 25 and 49-month intervals using Intermediate criteria and review for documentation of unusual circumstances.

If appropriate after review of the Report, obtain current data for recently performed inspections from the State DOT and analyze frequency intervals. Data should include the most recent and previous inspections, previous frequency, other data as needed for the analysis, and must cover at least 6 consecutive months or 25% of the bridge population being reviewed.

In-depth: Similar to Intermediate, but use In-depth sampling criteria to randomly sample bridges with inspections at 25 and 49-month intervals.

Commentary for Metric #6

Population: The population is defined to eliminate reassessment of the same inspection interval for the same bridge in successive review years. It also includes bridges indicated by the submitted data to be overdue for inspection – those that were due prior to the NBI submission date but did not have a new inspection date submitted. The analysis includes the 90/180 day NBI allowance for entering data and an additional 30 days for State compiling of the submittal.

Risk classification is based on the bridge's super/substructure condition and required load restrictions, determined using NBI Items 41, 63, 64, and 70. Using these items will help identify posted bridges that do not require load restriction, and therefore are lower risk. All bridges meeting approved extended interval NTE 48 month criteria are considered lower risk. Criteria used:

> Metric #6 – Lower risk bridges criteria: (NBI Item 59 and 60, or 62)>4 <u>and either</u> (NBI Item 70=5 and Item 63≠5) <u>or</u> (Item 41≠ B, P, or R)

Bridges adhering to FHWA approved extended frequency criteria are assumed to be lower risk.

Compliance levels: Compliance levels are based on several cumulative thresholds, which allow consideration of unusual circumstances that can make the completion of inspections within the required month impractical or inefficient. The percentages used in the summary of the Metric 6 ART Report are numerical representations of the compliance level thresholds.

For Compliance (C), while all bridges are expected to meet the meet the NTE 24/48 month interval, the summary uses 85% for that count, and 100% for 25/49 months. This allows 15% to have been inspected 1 month late without further analysis and still be assessed as C if the state has a process in place to document late inspections for unusual circumstances. However, if the 85% NTE 24/48 months is not met, a random sample of those bridges inspected in the $25^{th}/49^{th}$ month should be used to determine if unusual circumstances are documented. If all sampled bridges are documented, then the metric can be assessed as C.

As identified in the preamble of the NBIS regulation, severe weather, concern for inspector safety, concern for inspection quality, the need to optimize scheduling with other bridges, or other unique situations may be justifiable cause to push the inspection interval into the $25^{th}/49^{th}$ month. Such circumstances need to be documented. The thresholds also allow for flexibility so that structures previously inspected earlier than scheduled can get back on the original schedule.

An assessment of C can also be made if there are intervals that exceed the $25^{th}/49^{th}$ month and prior approval has been provided by FHWA.

For an assessment of Substantial Compliance (SC), the thresholds allow up to 10% of inspections to have been done after the $25^{th}/49^{th}$ month but 100% must be done by the $28^{th}/52^{nd}$ month. If these thresholds are exceeded as shown in the Metric 6 ART Report snapshot, further review of the data as described below may be necessary.

Also note that for SC, a 50% threshold is included in the Metric 6 ART Report for the NTE 24/48 month interval. The intent of this threshold is to convey an expectation that at least half of inspections should be done on time. Failure to meet the 50% threshold should not by itself result in a non-compliance determination; it may indicate other issues for which further investigation is needed.

Assessment Levels: Regardless of planned assessment level, the review of this metric begins at the Minimum level with the Metric 6 ART Report (described below). The Report must be reviewed and, at a minimum, the overdue inspections identified must be resolved. See below for additional Report review details.

For the Intermediate and In-depth levels, random sampling of 25/49 month interval inspections is required. This sampling is done to make sure that unusual circumstances leading to late inspections are documented.

Where warranted, the review can include obtaining the most recent inspection data from the state and performing a supplemental interval analysis. Such analysis should be done after consultation with the State DOT and if there is a reasonable chance that current inspections will reveal a higher level of compliance. BSE assistance is available if such an analysis is needed.

Metric 6 ART Report: The Report combines the "Push Button" delinquent inspection report that was included in ART for the 2011 review year and the frequency interval report (provided separately for the 2011 review). When accessed from within ART, the Report includes all bridges for the metric population, and is intended to be based on the most recent and previous April NBI submissions. The Report can also be run from the UPACS NBI reports page in Staffnet, where some filtering options for population subsets, such as State DOT or local agency bridges, are provided.

Depending on the summary result, the review may require detailed examination and resolution or overriding of the data. The Report is based on NBI data, which has some known limitations for determining compliance. A few of examples are border bridges where the other state has inspection responsibility, where the timing of submitting NBI data has missed an inspection, or the bridge has been replaced or work has been performed that changes the inspection schedule.

The interval and overdue status of individual bridges can be viewed on the data tab. Based on Division Office Bridge Staff review, the status of a bridge can be overridden using the appropriate code. This will usually be the result of the examples mentioned above. The snapshot on the summary tab will automatically update with the override codes.

The data tab includes generated random numbers that can be used to develop the $25^{th}/49^{th}$ month random sample.

Background/ changes for 2012*: This metric is revised to assess routine inspection intervals for lower risk bridges. Extended routine inspection interval bridges (2011 Metric #7), are considered lower risk and are included in this metric. Routine inspection intervals for higher risk bridges are assessed under revised Metric #7. These revisions allow for a simpler assessment process by combining similar risk inspections, and will allow a greater focus on higher risk bridges (Metric #7).*

Inspection interval thresholds used to determine compliance levels have been revised.

Review of the establishment of criteria to determine level and frequency for bridges that require inspection at less than 24 month intervals have been moved to Metric #11. Review of inspection dates to verify that bridge records match the data recorded in the NBI has been moved from this metric to Metric #22. Inspection quality (i.e. does the inspection meet acceptable routine inspection procedures as described in the MBE) is assessed under Metric #12 instead of this metric.

Metric #7: Routine inspection frequency – Higher risk bridges* Metric revised 3/19/12

650.311 (a) – Routine inspections – Have higher risk bridges been inspected at regular intervals not to exceed (NTE) 24 months?

Population: Higher risk bridges for the entire state or selected geographic/owner subset that are open to traffic and whose inspection dates have changed since the previous year's State NBI submission or whose inspections are overdue. *Higher risk bridges are defined for this metric as those with a superstructure or substructure, or culvert, condition rating of poor or worse, or are state legal load restricted.

Compliance Levels

Compliance (C): All bridges in the population are inspected within the required NTE 24 month interval, unless documented unusual circumstances have caused a 1-month delay for any inspections. All sampled 1-month delayed bridge inspections are documented for unusual circumstances.

Substantial Compliance (SC): At least 95% of bridges in the population are inspected within the required NTE 24 month interval plus one month, and 100% are inspected within the required interval plus four months.

Non-Compliance (NC): Substantial compliance criteria are not met.

Conditional Compliance (CC): Adhering to a FHWA approved plan of corrective action (PCA).

Criteria: Percent of higher risk bridges in the population that are inspected in accordance with the NTE 24 month interval.

Assessment Levels

Regardless of planned assessment level, review of this metric is progressive beginning with the Minimum level.

Minimum: If a PCA is currently in effect, monitor the PCA. Otherwise, review Metric 7 ART Report, which may require detailed examination and resolution of results.

Where a SC snapshot is indicated in the Report and all bridges are inspected within a 25 month interval, randomly sample bridges with 25 month intervals using Intermediate criteria and review for documentation of unusual circumstances (explained further in commentary). Where substantial changes in procedures have occurred that may reasonably show improved performance, consider supplemental analysis using current data as described in the Intermediate level.

Intermediate: Randomly sample bridges with routine inspections at 25 month intervals using Intermediate criteria and review for documentation of unusual circumstances.

If appropriate after review of the Report, obtain current data for recently performed inspections from the State DOT and analyze frequency intervals. Data should include the most recent and previous inspections, previous frequency, other data as needed for the analysis, and must cover at least 6 consecutive months or 25% of the bridge population being reviewed.

In-depth: Similar to intermediate, but use In-depth sampling criteria to randomly sample bridges with inspections at 25 month intervals.

Commentary for Metric #7

Population: The population is defined to eliminate reassessment of the same inspection interval for the same bridge in successive review years. It also includes bridges indicated by the submitted data to be overdue for inspection – those that were due prior to the NBI submission date but did not have a new inspection date submitted. The analysis includes the 90/180 day NBI allowance for entering data and an additional 30 days for State compiling of the submittal.

Risk classification is based on the bridge's super/substructure condition and required load restrictions, determined using NBI Items 41, 63, 64, and 70. Using these items will help eliminate posted bridges that do not actually require load restriction, and therefore are lower risk. Criteria used:

> Metric #7 – Higher risk bridges criteria: (NBI Item 59 or 60, or 62)<5 <u>or</u> NBI Item 70<5 <u>or</u> Item 63=5 <u>or</u> (Item 41= B, P, or R)

Bridges adhering to FHWA approved extended frequency criteria are assumed to be lower risk.

Compliance levels: Compliance levels are based on several cumulative thresholds, which allow factoring in unusual circumstances that can make the completion of inspections within the required month impractical or inefficient. The percentages used in the summary of the Metric 7 ART Report are numerical representations of the compliance level thresholds.

For Compliance (C), while all bridges are expected to meet the meet the NTE 24 month interval, the summary uses 95% for that count, and 100% for 25 months. This allows 5% to have been inspected one month late without further analysis and still be assessed as C if the state has a process in place to document late inspections for unusual circumstances. However, if the 95% threshold is not met, a random sample of those bridges inspected in the 25th month should be used to determine if unusual circumstances are documented. If all sampled bridges are documented, then the metric can be assessed as C.

As identified in the preamble of the NBIS regulation, severe weather, concern for inspector safety, concern for inspection quality, the need to optimize scheduling with other bridges, or other unique situations may be justifiable cause to push the inspection interval into the 25th month. Such circumstances need to be documented. The thresholds also allow for flexibility so that structures previously inspected earlier than scheduled can get back on the original schedule.

An assessment of C can also be made if there are intervals that exceed the 25th month and prior approval has been provided by FHWA.

For an assessment of Substantial Compliance (SC), the thresholds allow up to 5% of inspections to have been done after the 25th month but 100% must be done by the 28th month. If these thresholds are exceeded as shown in the Metric 7 ART Report snapshot, further review of the data as described below may be necessary.

Also note that for SC, a 50% threshold is included in the Metric 7 ART Report for the NTE 24 month interval. The intent of this threshold is to convey an expectation that at least half of inspections should be done on time. Failure to meet the 50% threshold should not by itself result in a non-compliance determination; it may indicate other issues for which further investigation is needed.

Assessment Levels: Regardless of planned assessment level, the review of this metric begins at the Minimum level with the Metric 7 ART Report (described below). The Report must be reviewed and, at a minimum, the overdue inspections identified must be resolved. See below for additional Report review details.

For the Intermediate and In-depth levels, random sampling of 25 month interval inspections is required. This sampling is done to make sure that unusual circumstances leading to late inspections are documented.

Where warranted, the review can include obtaining the most recent inspection data from the state and performing a supplemental interval analysis. Such analysis should be done after consultation with the State DOT's and if there is a reasonable chance that current inspections will reveal a higher level of compliance. BSE assistance is available if such an analysis is needed.

Metric 7 ART Report: The Report combines the "Push Button" delinquent inspection report that was included in ART for the 2011 review year and the frequency interval report (provided separately for the 2011 review). When accessed from within ART, the Report includes all bridges for the metric population, and is intended to be based on the most recent and previous April NBI submissions. The Report can also be run from the UPACS NBI reports page in Staffnet, where some filtering options for population subsets, such as State DOT or local agency bridges, are provided.

Depending on the summary result, the review may require detailed examination and resolution or overriding of the data. The Report is based on NBI data, which has some known limitations for determining compliance. A few of examples are border bridges where the other state has inspection responsibility, where the timing of submitting NBI data has missed an inspection, or the bridge has been replaced or work has been performed that changes the inspection schedule.

The interval and overdue status of individual bridges can be viewed on the data tab. Based on Division Office Bridge Staff review, the status of a bridge can be overridden using the appropriate code. This will usually be the result of the examples mentioned above. The snapshot on the summary tab will automatically update with the override codes.

The data tab includes generated random numbers that can be used to develop the 25th month random sample.

Background/ changes for 2012*: This metric is revised to assess routine inspection intervals for higher risk bridges. Extended routine inspection interval bridges (2011 Metric #7), are considered lower risk and are included in Metric #6. These revisions allow for a simpler assessment process by combining similar risk inspections, and will allow a greater focus on higher risk bridges.*

Inspection interval thresholds for used to determine compliance levels have been revised.

Review of the establishment of criteria to determine level and frequency for bridges that require inspection at less than 24 month intervals have been moved to Metric #11. Review of inspection dates to verify that bridge records match the data recorded in the NBI has been moved from this metric to Metric #22. Inspection quality (i.e. does the inspection meet acceptable routine inspection procedures as described in the MBE) is assessed under Metric #12 instead of this metric.

Metric #8: Underwater inspection frequency – Lower risk bridges* Metric revised 3/19/12

650.311 (b) – Underwater (UW) inspections – Have lower risk bridges that require an UW inspection (NBIS definition) been inspected at regular intervals not to exceed (NTE) 60 months, or NTE 72 months when adhering to FHWA approved UW criteria?

Population: Lower risk bridges for the entire state or selected geographic/owner subset that require UW inspections, are open to traffic, and whose inspection dates have changed since the previous year's State NBI submission or whose inspections are overdue. *Lower risk bridges are defined for this metric as those with a substructure or culvert condition rating of fair or better, and evaluated as not scour critical.

Compliance Levels

Compliance (C): All bridges in the population are inspected within the required NTE 60 or 72 month interval, as applicable, unless documented unusual circumstances have caused a 1-month delay for any inspections. All sampled 1-month delayed inspections are documented for unusual circumstances.

Substantial Compliance (SC): At least 90% of bridges in the population are inspected within the required NTE 60 or 72 month interval plus one month, as applicable, and 100% are inspected within the required interval plus four months. All bridges with extended inspections conform to FHWA approved criteria.

Non-Compliance (NC): Substantial compliance criteria are not met.

Conditional Compliance (CC): Adhering to a FHWA approved PCA.

Criteria: Percent of lower risk UW inspection bridges in the population that are inspected in accordance with the NTE 60 or 72 month interval.

Assessment Levels

Regardless of planned assessment level, review of this metric is progressive beginning with the Minimum level.

Minimum: If a PCA is currently in effect, monitor the PCA. Otherwise, review Metric 8 ART Report, which may require detailed examination and resolution of results as explained below. Review current list of bridges approved for extended UW interval, as applicable.

Where a SC snapshot is indicated in the Report and all bridges are inspected within a 61 or 73 month interval, as applicable, randomly sample bridges with 61 or 73 month intervals using Intermediate criteria and review for documentation of unusual circumstances. Where substantial changes in procedures have occurred that may reasonably show improved performance, consider supplemental analysis using current data as described in the Intermediate level.

Intermediate: Randomly sample bridges with inspections at 61 or 73 month intervals using Intermediate criteria and review for documentation of unusual circumstances.

If appropriate after review of the Report, obtain current data for recently performed UW inspections from the state DOT and analyze frequency intervals. Data should include the most recent and previous inspections, previous frequency, other data as needed for the analysis, and must cover at least 12 consecutive months or 25% of the bridge population being reviewed.

In-depth: Similar to intermediate, but use In-depth sampling criteria to randomly sample bridges with UW inspections at 61 or 73 month intervals.

Commentary for Metric #8

Population: The population is defined to eliminate reassessment of the same inspection interval for the same bridge in successive review years. It also includes bridges indicated by the submitted data to be overdue for inspection – those that were due prior to the NBI submission date but did not have a new inspection date submitted. The analysis includes the 90/180 day NBI allowance for entering data and an additional 30 days for State compiling of the submittal.

Risk classification is based on substructure/culvert condition and scour vulnerability. All bridges meeting approved extended underwater interval NTE 72 month criteria are considered lower risk. Criteria used:

> Metric #8 – Lower risk bridges criteria: (NBI Item 60 or 62)>4 <u>and</u> (NBI Item 113≠ 0, 1, 2, 3, or U)

Bridges adhering to FHWA approved extended frequency criteria are assumed to be lower risk.

Compliance levels: Compliance levels are based on several cumulative thresholds, which allow consideration of unusual circumstances that can make the completion of inspections within the required month impractical or inefficient. The percentages used in the summary of the Metric 8 ART Report are numerical representations of the compliance level thresholds.

For Compliance (C), while all bridges are expected to meet the meet the NTE 60/72 month interval, the summary uses 85% for that count, and 100% for 61/73 months. This allows 15% to have been inspected late without further analysis and still be assessed as C if the state has a process in place to document late inspections for unusual circumstances. However, if the 85% threshold is not met, a random sample of those bridges inspected in the 61st/73rd month should be used to determine if unusual circumstances are documented. If all sampled bridges are documented, then the metric can be assessed as C.

As identified in the preamble of the NBIS regulation, severe weather, concern for inspector safety, concern for inspection quality, the need to optimize scheduling with other bridges, or other unique situations may be justifiable cause to push the inspection interval into the 61st/73rd month. Such circumstances need to be documented. The thresholds also allow for flexibility so that structures previously inspected earlier than scheduled can get back on the original schedule.

An assessment of C can also be made if there are intervals that exceed the 61st/73rd month and prior approval has been provided by FHWA.

For an assessment of Substantial Compliance (SC), the thresholds allow up to 10% of inspections to have been done after the 61st/73rd month but 100% must be done by the 64th/76th month. If these thresholds are exceeded as shown in the Metric 8 ART Report snapshot, further review of the data as described below may be necessary.

Also note that for SC, a 50% threshold is included in the Metric 8 ART Report for the NTE 60/72 month interval. The intent of this threshold is to convey an expectation that at least half of inspections should be done on time. Failure to meet the 50% threshold should not by itself result in a non-compliance determination; it may indicate other issues for which further investigation is needed.

Assessment Levels: Regardless of planned assessment level, the review of this metric begins at the Minimum level with the Metric 8 ART Report (described below). The Report must be reviewed and, at a minimum, the overdue inspections identified must be resolved. See below for additional Report review details.

For the Intermediate and In-depth levels, random sampling of 61/73 month interval inspections is required. This sampling is done to make sure that unusual circumstances leading to late inspections are documented.

Where warranted, the review can include obtaining the most recent inspection data from the state and performing a supplemental interval analysis. Such analysis should be done after consultation with the State DOT's and if there is a reasonable chance that current inspections will reveal a higher level of compliance. BSE assistance is available if such an analysis is needed.

Metric 8 ART Report: The Report combines the "Push Button" delinquent inspection report that was included in ART for the 2011 review year and the frequency interval report (provided separately for the 2011 review). When accessed from within ART, the Report includes all bridges for the metric population, and is intended to be based on the most recent and previous April NBI submissions. The Report can also be run from the UPACS NBI reports page in Staffnet, where some filtering options for population subsets, such as State DOT or local agency bridges, are provided.

Depending on the summary result, the review may require detailed examination and resolution or overriding of the data. The Report is based on NBI data, which has some known limitations for determining compliance. A few of examples are border bridges where the other state has inspection responsibility, where the timing of submitting NBI data has missed an inspection, or the bridge has been replaced or work has been performed that changes the inspection schedule.

The interval and overdue status of individual bridges can be viewed on the data tab. Based on Division Office Bridge Staff review, the status of a bridge can be overridden using the appropriate code. This will usually be the result of the examples mentioned above. The snapshot on the summary tab will automatically update with the override codes.

The data tab includes generated random numbers that can be used to develop the 61st/73rd month random sample.

Background/ changes for 2012*: This metric is revised to assess UW inspection intervals for lower risk bridges. Extended UW inspection interval bridges (2011 Metric #9), are considered lower risk and are included in this metric. UW inspection intervals for higher risk bridges are assessed under revised Metric #9. These revisions allow for a simpler assessment process by combining similar risk inspections, and will allow a greater focus on higher risk bridges (Metric #9).*

Inspection interval thresholds for used to determine compliance levels have been revised.

Review of the establishment of criteria to determine level and frequency for bridges that require UW inspection at less than 60 month intervals have been moved to Metric #11. Review of inspection dates to verify that bridge records match the data recorded in the NBI has been moved from this metric to Metric #22. Inspection quality (i.e. does the inspection meet acceptable UW inspection procedures as described in the MBE) is assessed under Metric #12 instead of this metric.

<u>Metric #9:</u> Underwater inspection frequency – Higher risk bridges* Metric revised 3/19/12

650. 311 (b) – Underwater (UW) inspections – Have higher risk bridges that require an UW inspection (NBIS definition) been inspected at regular intervals not to exceed (NTE) 60-months?

Population: Higher risk bridges for the entire state or selected geographic/owner subset that require UW inspections, are open to traffic, and whose inspection dates have changed since the previous year's State NBI submission or whose inspections are overdue. *Higher risk bridges are defined for this metric as those with a substructure or culvert condition rating of poor or worse, or evaluated as scour critical.

Compliance Levels

Compliance (C): All bridges in the population are inspected within the required NTE 60 month interval, unless documented **unusual circumstances** have caused a 1-month delay for any inspections. All sampled 1-month delayed inspections are documented for unusual circumstances.

Substantial Compliance (SC): At least 95% of bridges in the population are inspected within the required NTE 60 month interval plus one month, and 100% are inspected within the required interval plus four months.

Non-Compliance (NC): Substantial compliance criteria are not met.

Conditional Compliance (CC): Adhering to a FHWA approved plan of corrective action (PCA).

Criteria: Percent of higher risk UW inspection bridges in the population that are inspected in accordance with the NTE 60 month interval.

Assessment Levels

Regardless of planned assessment level, review of this metric is progressive beginning with the Minimum level.

Minimum: If a PCA is currently in effect, monitor the PCA.

Otherwise, review Metric 9 ART Report, which may require detailed examination and resolution of results.

Where a SC snapshot is indicated in the Report and all bridges are inspected within a 61 month UW interval, randomly sample bridges with 61 month intervals using Intermediate criteria and review for documentation of unusual circumstances.

Where substantial changes in procedures have occurred that may reasonably show improved performance, consider supplemental analysis using current data as described in the Intermediate level.

Intermediate: Randomly sample bridges with UW inspections at 61 month intervals using Intermediate criteria and review for documentation of unusual circumstances.

If appropriate after review of the Report, obtain current data for recently performed UW inspections from the state DOT and analyze frequency intervals. Data should include the most recent and previous inspections, previous frequency, other data as needed for the analysis, and must cover at least 12 consecutive months or 25% of the bridge population being reviewed.

In-depth: Similar to intermediate, but use In-depth sampling criteria to randomly sample bridges with UW inspections at 61 month intervals.

Commentary for Metric #9

Population: The population is defined to eliminate reassessment of the same inspection interval for the same bridge in successive review years. It also includes bridges indicated by the submitted data to be overdue for inspection – those that were due prior to the NBI submission date but did not have a new inspection date submitted. The analysis includes the 90/180 day NBI allowance for entering data and an additional 30 days for State compiling of the submittal.

Risk classification is based on substructure/culvert condition and scour vulnerability. Criteria used:

> Metric #9 – Higher risk bridges criteria: (NBI Item 60 or 62)<5 <u>or</u> (NBI Item 113= 0, 1, 2, 3, or U)

Bridges adhering to FHWA approved extended UW frequency criteria are assumed to be lower risk.

Compliance levels: Compliance levels are based on several cumulative thresholds, which allow factoring in unusual circumstances that can make the completion of inspections within the required month impractical or inefficient. The percentages used in the summary of the Metric 9 ART Report are numerical representations of the compliance level thresholds.

For Compliance (C), while all bridges are expected to meet the meet the NTE 60 month interval, the summary uses 95% for that count, and 100% for 61 months. This allows 5% to have been inspected late without further analysis and still be assessed as C if the state has a process in place to document late inspections for unusual circumstances. However, if the 95% threshold is not met, a random sample of those bridges inspected in the 61st month should be used to determine if unusual circumstances are documented. If all sampled bridges are documented, then the metric can be assessed as C.

As identified in the preamble of the NBIS regulation, severe weather, concern for inspector safety, concern for inspection quality, the need to optimize scheduling with other bridges, or other unique situations may be justifiable cause to push the inspection interval into the 61st month. Such circumstances need to be documented. The thresholds also allow for flexibility so that structures previously inspected earlier than scheduled can get back on the original schedule.

An assessment of C can also be made if there are intervals that exceed the 61st month and prior approval has been provided by FHWA.

For an assessment of Substantial Compliance (SC), the thresholds allow up to 5% of inspections to have been done after the 61st month but 100% must be done by the 64th month. If these thresholds are exceeded as shown in the Metric 9 ART Report snapshot, further review of the data as described below may be necessary.

Also note that for SC, a 50% threshold is included in the Metric 9 ART Report for the NTE 60 month interval. The intent of this threshold is to convey an expectation that at least half of inspections should be done on time. Failure to meet the 50% threshold should not by itself result in a non-compliance determination; it may indicate other issues for which further investigation is needed.

Assessment Levels: Regardless of planned assessment level, the review of this metric begins at the Minimum level with the Metric 9 ART Report (described below). The Report must be reviewed and, at a minimum, the overdue inspections identified must be resolved. See below for additional Report review details.

For the Intermediate and In-depth levels, random sampling of 61 month interval inspections is required. This sampling is done to make sure that unusual circumstances leading to late inspections are documented.

Where warranted, the review can include obtaining the most recent inspection data from the state and performing a supplemental interval analysis. Such analysis should be done after consultation with the State DOT's and if there is a reasonable chance that current inspections will reveal a higher level of compliance. BSE assistance is available if such an analysis is needed.

Metric 9 ART Report: The Report combines the "Push Button" delinquent inspection report that was included in ART for the 2011 review year and the frequency interval report (provided separately for the 2011 review). When accessed from within ART, the Report includes all bridges for the metric population, and is intended to be based on the most recent and previous April NBI submissions. The Report can also be run from the UPACS NBI reports page in Staffnet, where some filtering options for population subsets, such as State DOT or local agency bridges, are provided.

Depending on the summary result, the review may require detailed examination and resolution or overriding of the data. The Report is based on NBI data, which has some known limitations for determining compliance. A few of examples are border bridges where the other state has inspection responsibility, where the timing of submitting NBI data has missed an inspection, or the bridge has been replaced or work has been performed that changes the inspection schedule.

The interval and overdue status of individual bridges can be viewed on the data tab. Based on Division Office Bridge Staff review, the status of a bridge can be overridden using the appropriate code. This will usually be the result of the examples mentioned above. The snapshot on the summary tab will automatically update with the override codes.

The data tab includes generated random numbers that can be used to develop the 61st month random sample.

Background/ changes for 2012*: This metric is revised to assess UW inspection intervals for higher risk bridges. Extended UW inspection interval bridges (2011 Metric #9), are considered lower risk and are included in Metric #8. These revisions allow for a simpler assessment process by combining similar risk inspections, and will allow a greater focus on higher risk bridges.*

Inspection interval thresholds for used to determine compliance levels have been revised.

Review of the establishment of criteria to determine level and frequency for bridges that require UW inspection at less than 60 month intervals have been moved to Metric #11. Review of inspection dates to verify that bridge records match the data recorded in the NBI has been moved from this metric to Metric #22. Inspection quality (i.e. does the inspection meet acceptable routine inspection procedures as described in the MBE) is assessed under Metric #12 instead of this metric.

Metric #10: Inspection frequency – Fracture critical member Metric revised 3/19/12

650. 311 (c) – Fracture critical member (FCM) – Have all FCMs been inspected at regular intervals not to exceed (NTE) 24 months?

Population: Bridges for the entire state or selected geographic/owner subset that have FCMs, are open to traffic, and whose inspection dates have changed since the previous year's State NBI submission or whose inspections are overdue.

Compliance Levels

Compliance (C): All bridges in the population are inspected within the required NTE 24 month interval, unless documented unusual circumstances have caused a 1-month delay for any inspections. All sampled 1-month delayed bridge inspections are documented for unusual circumstances.

Substantial Compliance (SC): At least 95% of bridges in the population are inspected within the required NTE 24 month interval plus one month, and 100% are inspected within the required interval plus four months.

Non-Compliance (NC): Substantial compliance criteria are not met.

Conditional Compliance (CC): Adhering to a FHWA approved plan of corrective action (PCA).

Criteria: Percent of FCM bridges in the population that are inspected in accordance with the NTE 24 month interval.

Assessment Levels

Regardless of planned assessment level, review of this metric is progressive beginning with the Minimum level.

Minimum: If a PCA is currently in effect, monitor the PCA.

Otherwise, review Metric 10 ART Report, which may require detailed examination and resolution of results.

Where a SC snapshot is indicated in the Report and all bridges are inspected within a 25 month interval, randomly sample bridges with 25 month intervals using Intermediate criteria and review for documentation of unusual circumstances (explained further in commentary).

Where substantial changes in procedures have occurred that may reasonably show improved performance, consider supplemental analysis using current data as described in the Intermediate level.

Intermediate: Randomly sample bridges with routine inspections at 25 month intervals using Intermediate criteria and review for documentation of unusual circumstances.

If appropriate after review of the Report, obtain current data for recently performed FCM inspections from the state DOT and analyze frequency intervals. Data should include the most recent and previous inspections, previous frequency, other data as needed for the analysis, and must cover at least 6 consecutive months or 25% of the bridge population being reviewed.

In-depth: Similar to intermediate, but use in-depth sampling criteria to randomly sample bridges with FCM inspections at 25 month intervals.

Commentary for Metric #10

Population: The population is defined to eliminate reassessment of the same inspection interval for the same bridge in successive review years. It also includes bridges indicated by the submitted data to be overdue for inspection – those that were due prior to the NBI submission date but did not have a new inspection date submitted. The analysis includes the 90/180 day NBI allowance for entering data and an additional 30 days for State compiling of the submittal.

Compliance levels: Compliance levels are based on several cumulative thresholds, which allow consideration of unusual circumstances that can make the completion of inspections within the required month impractical or inefficient. The percentages used in the summary of the Metric 10 ART Report are numerical representations of the compliance level thresholds.

For Compliance (C), while all bridges are expected to meet the meet the NTE 24 month interval, the summary uses 95% for that count, and 100% for 25 months. This allows 5% to have been inspected late without further analysis and still be assessed as C if the state has a process in place to document late inspections for unusual circumstances. However, if the 95% threshold is not met, a random sample of those bridges inspected in the 25th month should be used to determine if unusual circumstances are documented. If all sampled bridges are documented, then the metric can be assessed as C.

As identified in the preamble of the NBIS regulation, severe weather, concern for inspector safety, concern for inspection quality, the need to optimize scheduling with other bridges, or other unique situations may be justifiable cause to push the inspection interval into the 25th month. Such circumstances need to be documented. The thresholds also allow for flexibility so that structures previously inspected earlier than scheduled can get back on the original schedule.

An assessment of C can also be made if there are intervals that exceed the 25th month and prior approval has been provided by FHWA.

For an assessment of Substantial Compliance (SC), the thresholds allow up to 5% of inspections to have been done after the 25th month but 100% must be done by the 28th month. If these thresholds are exceeded as shown in the Metric 10 ART Report snapshot, further review of the data as described below may be necessary.

Also note that for SC, a 50% threshold is included in the Metric 10 ART Report for the NTE 24 month interval. The intent of this threshold is to convey an expectation that at least half of inspections should be done on time. Failure to meet the 50% threshold should not by itself result in a non-compliance determination; it may indicate other issues for which further investigation is needed.

Assessment Levels: Regardless of planned assessment level, the review of this metric begins at the Minimum level with the Metric 10 ART Report (described below). The Report must be reviewed and, at a minimum, the overdue inspections identified must be resolved. See below for additional Report review details.

For the Intermediate and In-depth levels, random sampling of 25 month interval inspections is required. This sampling is done to make sure that unusual circumstances leading to late inspections are documented.

Where warranted, the review can include obtaining the most recent inspection data from the state and performing a supplemental interval analysis. Such analysis should be done after consultation with the State DOT's and if there is a reasonable chance that current inspections will reveal a higher level of compliance. BSE assistance is available if such an analysis is needed.

Metric 10 ART Report: The Report combines the "Push Button" delinquent inspection report that was included in ART for the 2011 review year and the frequency interval report (provided separately for the 2011 review). When accessed from within ART, the Report includes all bridges for the metric population, and is intended to be based on the most recent and previous April NBI submissions. The Report can also be run from the UPACS NBI reports page in Staffnet, where some filtering options for population subsets, such as State DOT or local agency bridges, are provided.

Depending on the summary result, the review may require detailed examination and resolution or overriding of the data. The Report is based on NBI data, which has some known limitations for determining compliance. A few of examples are border bridges where the other state has inspection responsibility, where the timing of submitting NBI data has missed an inspection, or the bridge has been replaced or work has been performed that changes the inspection schedule.

The interval and overdue status of individual bridges can be viewed on the data tab. Based on Division Office Bridge Staff review, the status of a bridge can be overridden using the appropriate code. This will usually be the result of the examples mentioned above. The snapshot on the summary tab will automatically update with the override codes.

The data tab includes generated random numbers that can be used to develop the 25th month random sample.

Background/ changes for 2012*: Inspection interval thresholds for used to determine compliance levels have been revised.*

Review of the establishment of criteria to determine level and frequency for bridges that require inspection at less than 24 month intervals have been moved to Metric #11. Review of inspection dates to verify that bridge records match the data recorded in the NBI has been moved from this metric to Metric #22. Inspection quality (i.e. does the inspection meet acceptable routine inspection procedures as described in the MBE) is assessed under Metric #12 instead of this metric.

Metric #11: Inspection frequency – Frequency criteria	Metric revised 3/19/12

650.311 (a)(2),(b)(2),(c)2,(d) – Have criteria to determine level of inspection and frequency been established for less than 24-month intervals for 1) routine and 2) FCM inspections, and less than 60-month intervals for 3) underwater inspections. Have criteria to determine level of inspection and frequency been established for 4) damage, 5) in-depth and 6) special inspections?

Population: Bridges for the entire state or selected geographic/owner subset that meet State DOT established criteria, are open to traffic, and whose inspection dates have changed since the previous year's State NBI submission.

Compliance Levels

Compliance (C): All level of inspection and frequency criteria are established. Records for all sampled bridges indicate the appropriate level of inspection and frequency in accordance with the State DOT established criteria.

Substantial Compliance (SC): All level of inspection and frequency criteria are established. Records for less than all sampled bridges indicate the appropriate level of inspection and frequency in accordance with the State DOT established criteria.

Non-Compliance (NC): Substantial compliance criteria are not met.

Conditional Compliance (CC): Adhering to a FHWA approved plan of corrective action (PCA).

Criteria: Criteria to determine level of inspection and frequency established.

Assessment Levels

Minimum: If a PCA is currently in effect, monitor the PCA.

Based on previous review results and the Division Office Bridge staff's knowledge and awareness of Agency's level of inspection and frequency criteria. Division has a copy of the established and approved criteria.

Intermediate: Review State DOT established level of inspection and frequency criteria. Randomly sample bridges that meet the established criteria using Intermediate sampling criteria, and review bridge inspection records for adherence to State DOT established criteria.

In-depth: Similar as intermediate level, but use In-depth sampling criteria.

Commentary for Metric #11

Compliance levels: If sampled bridge records are found that do not adhere to the State DOT established level and frequency criteria, the State PM is to be notified of the finding in writing and the metric should be assessed as Substantial Compliance (SC) (review of sampled bridge records will not result in Non Compliance (NC)).

Reasonable documentation for not following the established State DOT criteria, if allowed by the State DOT criteria, is acceptable and should be counted as adhering to the criteria.

Assessment Levels: For the Intermediate and In-depth levels, a single random sample is to be developed from all 6 State DOT established criteria. The Division Office Bridge staff should attempt to independently use the State DOT established criteria to develop the metric population from NBI data. However, the portion of the population for bridges requiring damage, in-depth and special inspections, will likely need to be obtained from the State DOT and merged with the metric population developed from the other criteria. Where determining the metric population cannot be developed from NBI data, the Division Office Bridge staff should work with the State DOT to develop this population.

Background/ changes for 2012*: This metric is revised to add the review of the establishment of criteria to determine level and frequency for bridges that require more frequent 1) routine, 2) FCM inspections, and 3) underwater inspections.*

Sampling of bridges that adhere to the State DOT established criteria has been added.

Metric #12: Inspection procedures–Quality Inspections	Metric revised 3/19/12

650.313 (a) & (b) – Inspect each bridge in accordance with the procedures in the *Manual for Bridge Evaluation (MBE)*, and provide at least one team leader during each inspection.

Is each bridge inspected with nationally recognized acceptable inspection procedures, with the necessary quality of assessment, rating and documentation? Is one qualified team leader at the bridge at all times during each initial, routine, in-depth, fracture critical member and underwater inspection?

Population: The population for this metric is all bridges sampled in Metrics 13 through 23. The sample to use for evaluating this metric is all bridges selected for field review.

Compliance Levels

Compliance (C): At least 90% of inspection reports have condition codes within generally acceptable tolerances. All notable bridge deficiencies are identified on at least 90% of inspection reports. At least 90% of inspection reports have condition codes supported by narrative that appropriately justifies and documents the rating or condition state assignment. A qualified team leader is on site for 100% of initial, routine, in-depth, fracture critical member, or underwater inspections performed.

Substantial Compliance (SC): At least 80% of inspection reports have condition codes within generally acceptable tolerances. At least 80% of inspection reports have all notable bridge deficiencies identified on inspection reports. At least 80% of inspection reports have condition codes supported by narrative that appropriately justifies and documents the rating or condition state assignment. A qualified team leader is on site for 100% of initial, routine, in-depth, fracture critical member, or underwater inspections.

Non-Compliance (NC): Substantial compliance criteria are not met.

Conditional Compliance (CC): Adhering to a FHWA approved plan of corrective action (PCA).

Criteria: Inspect bridges using nationally recognized acceptable inspection procedures, and provide quality inspection reports and condition assessments in accordance with the MBE. A qualified team leader is present at all initial, routine, in-depth, fracture critical member or underwater inspections.

Assessment Levels

Minimum: For all bridges selected for field reviews within the review year, perform field reviews to compare inspection reports with actual bridge conditions to evaluate: 1) accuracy of condition codes, 2) thoroughness of inspections to identify and accurately determine significance of deficiencies, and 3) adequacy of documentation and appropriate justification of determined ratings.

Intermediate: In addition to the minimum level, review selected bridge records and reports to ensure a qualified team leader, as approved by the program manager, was present at each inspection. Unannounced field verification of some ongoing inspections may be performed to observe team leader presence and inspection procedures used.

In-depth: Increase the number of records and bridges to review in the field in accordance with in-depth sampling criteria. Use unannounced field verification of some ongoing inspections to observe team leader presence and inspection procedures. Request information on inspection rates for each team leader and review for reasonableness.

Commentary for Metric #12

Metric 12 is assessing whether or not the bridge inspections being performed are thorough, yielding accurate results, well documented, and conducted by a qualified team leader. This is primarily intended to be assessed by reviewing inspection reports, and comparing those to the actual site conditions observed by the Division Office Bridge staff during the field reviews. It should be noted that Metric 22 is also assessed during every field review. Metric 12, as noted below, is focusing on the four main condition codes resulting from the inspection, whereas Metric 22 assesses other NBI data items associated with the bridge record (and intentionally excludes the condition items already assessed under Metric 12). Metric 12 is focused on inspection quality, whereas Metric 22 is focused on the quality of bridge data in the NBI.

Nationally recognized acceptable inspection procedures are listed in the MBE, and further detailed in the *Bridge Inspectors' Reference Manual* (BIRM), and the comprehensive training course.

Population: The process for identifying bridges to be reviewed for this metric is further explained in the *Field Review Guidance* in Chapter 2 of the Bridge Program Manual.

Compliance Levels: *Generally acceptable tolerances* for condition assessments are when the inspector determined NBI condition codes are within one value of the review team's (FHWA/State), and/or the inspector determined element level data are in the proper conditions states, with elements and quantities properly determined. Properly determined element level data should identify at least 80% of the elements and quantities, be generally supportive of the NBI condition codes, and any actual Condition State 4 condition must be accounted for and described in the report. <u>Until element level data is required for reporting to the NBI, only evaluate the main component NBI condition codes, Items 58, 59, 60 and 62, for this metric when determining compliance</u>. Any findings in element level data should be discussed with the State, but should not influence the compliance determination.

Percentages for measuring compliance should be determined based on the number of bridges field reviewed. For example, one bridge may have current inspection reports for routine, fracture critical and underwater inspections. This package of three reports should be considered one data point. The result of the three inspections should yield one resulting superstructure condition code, for example. If the three reports are judged to have the four condition codes within acceptable tolerances, it would be a positive data point toward compliance.

In another scenario, if 20 bridges selected for field review had 25 current NBIS inspection reports (five are inspections other than routine), the denominator to use for the percentage calculation should be 20 (not 25). If 18 of the 20 bridges had condition codes within acceptable tolerances (18/20, or 90%), the determination for this factor would be compliant. Each of the factors associated with percentages – condition codes, identified notable deficiencies, suitable documentation, qualified team leader presence – should be calculated in this way, independent from each other. If three of the four factors met compliance thresholds, but all notable deficiencies were only identified on 16 of the 20 bridges (80%), the metric compliance level would be substantial compliance.

Notable bridge deficiencies are those leading to NBI component ratings of 5 or less, or require some kind of immediate action.

Appropriate justification of determined ratings means the lower the value of the condition code, the amount of documentation increases to thoroughly describe its location, extent and significance. While a condition code of 6 may normally warrant fairly concise narrative, as the condition worsens more is required, which will probably also include photos, sketches, measurements, etc., to fully document the identified deficiencies and support the assigned condition rating.

Assessment Levels: Information on the inspection rates of team leaders should be used to determine if there appears to be any evidence that inspection quality might be compromised. If it is determined that inspection team leaders are performing more than 10 inspections per day, it may be very difficult for them to provide a quality inspection. Therefore, their work may need to be targeted for more focused review. The review could be as simple as driving to each bridge to see if there is enough time in one day just to access all of them. If it can be determined it is impossible to inspect the number of bridges in a day that the team leader has signed for, then compliance with this metric should be questioned.

Comparing the team leader designated on the inspection report to an approved list of team leaders provided by the program manager will provide evidence that a qualified team leader was present. If you become aware that there is a problem with the qualifications of a team leader(s), this should be assessed under Metric 3 and explained accordingly.

Background for 2012 changes: Revised this metric to incorporate 650.313(a), which requires bridges to be inspected according to recognized standards, instead of just (b), which requires a team leader to be present during the inspection. This metric now considers the quality of inspections performed under the NBIS. Also, modified SC criteria to remove reduced qualifications of team leader as this is covered by Metric 3, and added a commentary section to give further insight into the intended meaning of certain terms or concepts. Sampling and assessments for this metric were changed to recognize that this metric can only be meaningfully assessed by reviewing bridges in the field, and also acknowledging the annual NBIP review expectation that a minimum number of field reviews are to be performed each year.

<u>Metric #13:</u> 23 CFR 650.313 Inspection procedures – Load Rating

650.313 (c) - Rate each bridge
Has each bridge been rated to its safe load carrying capacity in accordance with the AASHTO Manual?

Compliance (C): Yes.

Substantial Compliance (SC): 100% of all bridges with NBI condition ratings of 4-Poor or less for Deck (item 58), Superstructure (item 59), Substructure (item 60), Culvert (item 62), NBI appraisal ratings of 3-Serious or less for Structural Evaluation (item 67), load restricted bridges (NBI item 41 coded as P or R), bridges with temporary supports (NBI item 41 coded as D or E), and bridges with fracture critical members have a load rating in accordance with the AASHTO Manual. At least 95% of all other bridges have a load rating in accordance with the AASHTO Manual.

Non-Compliance (NC): Less than 100% of bridges with NBI condition ratings of 4 or less for items 58, 59, 60 or 62, NBI appraisal ratings of 3 or less for item 67, load restricted bridges, bridges with temporary supports, and bridges with fracture critical members have a load rating in accordance with the AASHTO Manual. Less than 95% of all other bridges have a load rating in accordance with the AASHTO Manual.

Conditional Compliance (CC): Adhering to approved plan of corrective action.

Criteria: Percent of bridges that have a load rating in accordance with the AASHTO Manual.

Assessment Levels

Minimum: Based on Division Office Bridge staff's knowledge and awareness of Agency's load rating practices. Generate standard NBI reports related to load ratings and review results. Division should have a copy of state legal and permit load laws and regulations to ensure consistency with State policies and procedures.

Intermediate: Generate standard NBI reports related to load ratings and review results. Randomly sample using a MOE of 15% and a LOC of 80% to review bridge records to ensure load rating calculations exist and the design, legal, and routine permit loads in the records match the data recorded in the inventories. Review legal and permit load laws and regulations to ensure consistency with State policies and procedures. The sample should be selected to ensure a review of higher risk bridges (see note below). Site visits of some bridges should be performed to verify condition of bridge is as stated in load rating.

In-depth: Generate standard NBI reports related to load ratings and review results. Randomly sample using a MOE of 15% and a LOC of 90% to review bridge records to ensure load rating calculations exist and the design, legal, and routine permit loads in the records match the data recorded in the inventories. The sample should be selected to ensure a review of higher risk bridges (see note below). At least ten percent of the sampled bridges should be field reviewed to ensure assumptions made in the load rating are valid. Perform checks on some load ratings to verify load rating calculations and

methodology. Review legal and permit load laws and regulations to ensure consistency with State policies and procedures.

Note: Higher risk bridge records include ones with NBI condition ratings of 4 or less for items 58, 59, 60, or 62, an appraisal rating of 3 or less for item 67, load restricted bridges, bridges with temporary supports or bridges with FCMs.

<u>Metric #14:</u> 23 CFR 650.313 Inspection procedures – Post or Restrict

650.313 (c) – Post or restrict the bridge
Have all bridges been posted or restricted in accordance with the AASHTO Manual or in accordance with State law, when the maximum unrestricted legal loads or State routine permit loads exceed that allowed under the operating rating or equivalent rating factor?

Compliance (C): Yes.

Substantial Compliance (SC): From the sample reviewed, posting deficiencies are limited to acts of sign vandalism or impact damage.

Non-Compliance (NC): Bridges requiring load restrictions are not properly posted and posting deficiencies are not addressed.

Conditional Compliance (CC): Adhering to approved plan of corrective action.

Criteria: Proper posting of bridges and promptly addressing posting deficiencies.

Assessment Levels

Minimum: Based on Division Office Bridge staff's knowledge and awareness of Agency's load posting practices and the consistency of the practices with posting laws and regulations. Generate standard NBI reports related to load postings and review results. Division should have a list of posted bridges and what the posting or restriction for load signing is at the bridge site.

Intermediate: Generate standard NBI reports related to load postings and review results. Randomly sample using a MOE of 15% and a LOC of 80% to review bridge records for confirmation that the load posting signs are in place and match the posting levels in the calculations and SI&A. May perform site visits of some sampled bridges to verify the posting signs exist and match the current load rating information.

In-depth: Generate standard NBI reports related to load postings and review results. Randomly sample using a MOE of 15% and a LOC of 90% to review bridge records for confirmation that the load posting signs are in place and match the posting levels in the calculations and SI&A. Perform site visits of some sampled bridges to verify the posting signs exist and match the current load rating information.

<u>Metric #15:</u> 23 CFR 650.313 Inspection procedures – Bridge Files

650.313 (d) – Prepare bridge files
Have bridge files been prepared as described in the AASHTO Manual i.e., maintain reports on the results of bridge inspections together with notations of any action taken to address the findings of such inspections, maintain relevant maintenance and inspection data to allow assessment of current bridge condition, and record the findings and results of bridge inspections on standard forms.

Compliance (C): Yes.

Substantial Compliance (SC): All bridges selected for sampling have files and include the most recent bridge inspection on the standard form. At least 90% of files sampled have significant bridge file components as listed in the metric.

Non-Compliance (NC): Any bridge selected for sampling does not have a file or the file does not include the most recent bridge inspection on the standard form. Less than 90% of files sampled have significant bridge file components.

Conditional Compliance (CC): Adhering to approved plan of corrective action.

Criteria: Percent of bridge files missing significant bridge file components that include:

Inspection History
SI&A sheets
Bridge load rating & posting recommendations, including load rating calculations or load test data, dates and signing recommendations, traffic data
Photographs
Maintenance & repair history
Inspection requirements and procedures - special equipment needed or features to be inspected.
Flood data, waterway adequacy, channel cross sections, underwater inspection reports, scour data and assessments, POAs.

Assessment Levels

Minimum: Based on Division Office Bridge staff's knowledge and awareness of Agency's practices.

Intermediate: Randomly sample using a MOE of 15% and a LOC of 80% to review bridge records to ensure the significant bridge record components exist. May perform site visits to verify bridge record contents.

In-depth: Randomly sample using a MOE of 15% and a LOC of 90% to review bridge records to ensure the significant bridge record components exist. Must perform site visits of some bridges to verify the accuracy of bridge file components.

<u>Note:</u> The same sample may be used when verifying the accuracy of the data during the assessment of metric #22 (650.3315(a)).

<u>Metric #16:</u> 23 CFR 650.313 Inspection procedures – Fracture Critical Members

650.313 (e) (1) – Bridges with fracture critical members (FCMs)
Are the location of FCMs identified and the FCM inspection frequency and procedures described in the inspection records for each bridge requiring a fracture critical member inspection? Are FCMs inspected according to these procedures?

Compliance (C): Yes.

Substantial Compliance (SC): At least 95% of files sampled of bridges with FCMs have the FCMs properly identified and the inspection frequencies, procedures and conditions of FCMs described.

Non-Compliance (NC): Less than 95% of files sampled of bridges with FCMs have the FCMs properly identified and the inspection frequencies, procedures and conditions of FCMs described.

Conditional Compliance (CC): Adhering to approved plan of corrective action.

Criteria: Bridges with the locations of FCMs identified and inspection frequencies, procedures and conditions of FCMs described. Refer back to Metric 10 if not following the procedures as inspections would not be valid and therefore inspection frequency is not met.

Assessment Levels

Minimum: Based on Division Office Bridge staff's knowledge and awareness of Agency's identification of FCMs and inspection procedures. Division has the list of bridges with FCMs and identifies bridges with written procedures.

Intermediate: Randomly sample using a MOE of 15% and a LOC of 80% to review records of bridges with FCMs to ensure they are properly identified, inspection frequency is listed, procedures are complete, conditions are described, and procedures are followed during FCM inspections.

In-depth: Randomly sample using a MOE of 15% and a LOC of 90% to review records of bridges with FCMs to ensure they are properly identified, inspection frequency is listed, procedures are complete, conditions are described, and procedures are followed during FCM inspections. Site review some bridges with FCMs and/or observe some FCM inspections to ensure procedures are being followed.

Metric #17: **Inspection procedures - Underwater**	Metric revised 3/19/12

650.313 (e) (2) – Bridges requiring underwater inspections – Are the location of underwater elements identified and the underwater elements, the inspection frequency, and the procedures described in the inspection records for each bridge requiring an underwater inspection? Are those elements requiring underwater inspections inspected according to these procedures?
Population: All bridges requiring underwater inspections.

Compliance Levels

Compliance (C): All bridges requiring underwater inspections have written inspection procedures which clearly identify the location of all underwater elements, including physical scour countermeasures, specify the frequency of inspection, describe any specific risk factors, and clearly detail inspection methods and equipment to be employed. Those procedures are being followed which produce thorough inspections yielding accurate condition assessments.

Substantial Compliance (SC): 90% of all bridges requiring underwater inspections have written inspection procedures which clearly identify the location of all underwater elements, including physical scour countermeasures, specify the frequency of inspection, describe any specific risk factors, and clearly detail inspection methods and equipment to be employed. Those procedures are being followed which produce thorough inspections yielding accurate condition assessments.

Non-Compliance (NC): Substantial compliance criteria are not met.

Conditional Compliance (CC): Adhering to approved plan of corrective action.

Criteria: Bridges requiring underwater inspections have acceptable written underwater inspection procedures, and evidence that the procedures are being followed.

Assessment Levels

Minimum: Based on Division Office Bridge staff's knowledge and awareness of the State's written underwater inspection procedures, and how well they are being followed. Division requests a current list of bridges requiring underwater inspection, and requests verification from the State DOT whether procedures have been developed for each of those bridges and the procedures are being used.

Intermediate: Randomly sample the selected bridge population using intermediate assessment sampling criteria. The sample should include some bridges that are scour critical, have unknown foundations, have a substructure rating of 4 or less, as well as bridges that require inspection at less than 60 months, as applicable. Review records, procedures and inspection reports to ensure acceptable written inspection procedures have been developed for these bridges, and the inspection procedures are followed during underwater inspections as documented in the underwater inspection report. Include some field reviews.

In-depth: Randomly sample the selected bridge population using in-depth assessment sampling criteria. In addition to the Intermediate Assessment measures, field review some bridges during underwater inspections to ensure procedures are being followed. Review NBI bridge data to check independently if any bridges, currently not identified as requiring underwater inspections, may require underwater inspection.

Commentary for Metric #17

Compliance Levels: *Specific risk factors* include waterway features such as rapid stream flows, significant debris accumulation, constricted waterway openings, soft or unstable streambeds, meandering channels, etc., which may promote scour and undermining of substructure elements. Water conditions which may affect the inspection such as black water, or rapid stream flows should also be identified and accounted for in the inspection methods. Water environment and structural systems or materials which may combine for accelerated deterioration of the bridge elements should be identified such as highly corrosive water, unprotected steel members, timber piling in the presence of teredos or limnoria, etc. By identifying these conditions or risk factors, the underwater inspectors can appropriately prepare for, and perform, a thorough inspection. Accordingly, the Division Office Bridge staff should, for those bridges selected from this metric for field review, look for any evidence of risk factors or unique circumstances or conditions at each site. Then evaluate whether the underwater inspection procedures developed for these bridges adequately address these items, and also whether the inspection reports adequately address them, as appropriate. Bridges sampled, but not field reviewed, should have the inspection procedures and the inspection reports evaluated likewise, but recognizing that there is no field assessment in this case.

Criteria: *Acceptable written underwater inspection procedures* are those procedures required in the NBIS for specific types of more complex inspections, in this case for underwater elements, to address those items that need to be communicated to the inspection team leader to insure a successful inspection. These inspections must be planned and prepared for, taking into account identified underwater elements, physical scour countermeasures, needed access, inspection equipment, structural details, hydraulic features and characteristics, risk factors (as detailed above), inspection methods and frequencies, and the required qualifications of inspecting personnel. Other items that may be addressed, if applicable, are: special contracting procedures prior to inspection (Coast Guard, etc.), scheduling considerations (lake draw down, canal dry time, etc.). The AASHTO MBE, Section 4, has general considerations regarding inspection plans. An owner may have general overall inspection procedures in their bridge inspection manual which address common aspects of underwater inspections; however, each bridge with elements requiring underwater inspection must have written inspection procedures specific to each bridge which address items unique to that bridge. The prior inspection report, by itself, does not suffice for the required procedures. It is valuable to review for previous inspection findings, but does not serve the same purpose as the inspection procedures. The inspection report records what an inspector <u>actually did</u>, what was looked at, and what was found. Procedures lay out what <u>should be done</u>, looked at, etc. However, the required procedures may be incorporated into the report, many times as an introductory section, and this is certainly an acceptable practice.
The assessment of this metric considers the risks of bridges which cross over waterways. The proper development of good inspection procedures, and concerted attention to follow those procedures, will mitigate most of those risks. In addition, the risk of scour for scour critical bridges, or bridges with unknown foundations, is mitigated by development and implementation of a scour plan of action (POA) for each bridge. This specific risk mitigation element is more specifically addressed in Metric 18, yet we recognize we considered this in developing how we evaluate this metric.

Background for 2012 changes: Risk is incorporated into this metric by reviewing the risk items associated with bridges having underwater elements, which includes scour. This change is made in conjunction with a change to modify the compliance threshold percentages used in the 2011 metrics

baseline for the risk categories in Metrics 8 & 9 (underwater inspection frequencies). The most significant risks are now being addressed under multiple metrics, as deemed appropriate depending on the type of risk. The risk associated with the underwater elements is assessed in this metric by looking at the bridge, examining whether the developed inspection procedures are adequate, and if the report documents a thorough inspection was done in accordance with the prescribed procedures. The 2011 metrics evaluated risk by assessing if 100% of inspections were done on time for the riskier bridges. This change more appropriately identifies risks and evaluates measures to mitigate those risks.

In addition, the Commentary section was added to give more specific insight into the intent of the metric, and incorporate the content from a relevant 2011 NBIP Q&A.

<u>Metric #18:</u> 23 CFR 650.313 Inspection procedures – Scour Critical Bridges

650.313 (e) (3) - Bridges that are scour critical
Has a plan of action (POA) been prepared to monitor known and potential deficiencies and to address critical findings? Have bridges that are scour critical been monitored in accordance with the plan?

Compliance (C): Yes.

Substantial Compliance (SC): NA.

Non-Compliance (NC): Less than 100%.

Conditional Compliance (CC): Adhering to approved plan of corrective action.

Criteria: Bridges with POAs.

Assessment Levels

Minimum: Based on Division Office Bridge staff's knowledge and awareness of Agency's identification of scour critical bridges and POA status. Generate standard NBI reports related to scour critical bridges and review results considering knowledge of the POA status for scour critical bridges. Division has a list of scour critical bridges which describes if there is a developed and implemented POA in the bridge record.

Intermediate: Generate standard NBI reports related to scour critical bridges and review results considering knowledge of the POA status for scour critical bridges. Randomly sample using a MOE of 15% and a LOC of 80% to review records of scour critical bridges to ensure a scour analysis exists and POAs are developed and implemented. Review monitoring procedures.

In-depth: Generate standard NBI reports related to scour critical bridges and review results. Randomly sample using a MOE of 15% and a LOC of 90% to review records of scour critical bridges. Review monitoring procedures. Verify through interviews and/or site visits that some of the sampled scour critical bridges have monitoring procedures and the POA is implemented.

<u>Metric #19:</u> 23 CFR 650.313 Inspection procedures – Complex Bridges

650.313 (f) – Complex bridges
Have specialized inspection procedures, and additional inspector training and experience required to inspect complex bridges been identified? Are complex bridges inspected according to those procedures?

Compliance (C): Yes.

Substantial Compliance (SC): At least 95% of complex bridges have specialized procedures and additional inspector training and experience required to inspect complex bridges have been identified.

Non-Compliance (NC): Less than 95% of complex bridges have specialized procedures and additional inspector training and experience required to inspect complex bridges have been identified.

Conditional Compliance (CC): Adhering to approved plan of corrective action.

Criteria: Complex bridges have documented inspection procedures and are inspected in accordance with those procedures.

Assessment Levels

Minimum: Based on Division Office Bridge staff's knowledge and awareness of Agency's complex bridge inspection procedures. The Division has a list of complex bridges and completed procedures are in the bridge record.

Intermediate: Generate and review list of complex bridges. Randomly sample using a MOE of 15% and a LOC of 80% to review records of complex bridges to ensure specialized inspection procedures, training, and experience required to inspect complex bridges are identified. Review inspection procedures in the records which should include some site review verification.

In-depth: Generate and review list of complex bridges. Randomly sample using a MOE of 15% and a LOC of 90% to review records of complex bridges to ensure specialized inspection procedures, training, and experience required to inspect complex bridges are identified. Review procedures of some of the sampled complex bridges. Perform some site reviews or observe complex bridge inspection(s) to ensure established procedures are being followed.

<u>Metric #20:</u> 23 CFR 650.313 Inspection procedures – QC/QA

650.313 (g) – Quality control and quality assurance
Are systematic quality control (QC) and quality assurance (QA) procedures used to maintain a high degree of accuracy and consistency in the inspection program? Are periodic field review of inspection teams, periodic bridge inspection refresher training for program managers and team leaders, and independent review of inspection reports and computations included in the procedures?

Compliance (C): Yes.

Substantial Compliance (SC): Periodic field reviews of inspection teams, as required by the QC/QA procedures, were documented for at least 90% of the bridge records sampled. At least 80% of program managers and team leaders have attended periodic bridge inspection refresher training as defined in State's QC/QA procedures or will complete the necessary training within 12 months. At least 95% of inspection reports and load rating computations sampled were reviewed in accordance with the QC/QA procedures.

Non-Compliance (NC): No QC/QA policy and procedures exist. Periodic field reviews of inspection teams, as required by the QC/QA procedures, were documented for less than 90% of the bridge records sampled. Less than 80% of program managers and team leaders have attended periodic bridge inspection refresher training as defined in State's QC/QA procedures or are delinquent by more than 12 months. Less than 95% of inspection reports and load rating computations sampled are reviewed in accordance with the QC/QA procedures.

Conditional Compliance (CC): Adhering to approved plan of corrective action.

Criteria: Documented QC/QA policies and procedures. Percent of periodic field reviews of inspection teams documented. Percent of staff receiving refresher training. Percent of inspection reports and load rating computations sampled.

Assessment Levels

Minimum: Based on Division Office Bridge staff's knowledge and awareness of Agency's QC/QA program. The Division has a current copy of the state's QC/QA procedures.

Intermediate: Request list of bridge inspection records that were reviewed in the field by the Agency and compare to established sampling rate in their procedures. Review QC/QA procedures. Request list of Program Manager and all Team Leaders, including dates of latest refresher training and compare with frequency established. Randomly sample using a MOE of 15% and a LOC of 80% to review records to ensure inspection reports and load ratings are independently reviewed per established QC/QA procedures.

In-depth: Request list of bridge inspection records that were reviewed in the field by the Agency and compare to established sampling rate in their procedures. Review QC/QA procedures.
Request list of Program Manager and all Team Leaders, including dates of latest refresher training and compare with frequency established. Randomly sample using a MOE of 15% and a LOC of 90% to

review records to ensure inspection reports and load ratings are independently reviewed per established QC/QA procedures. Participate in QA reviews on some bridges to ensure established procedures are being followed.

Note: *Intermediate and in-depth assessments for this metric require information from the intermediate or in-depth assessments performed on metric #2 & #3 (650.309 (a) & 650.309 (b)).*

<u>Metric #21:</u> 23 CFR 650.313 Inspection procedures – Critical Findings

650.313 (h) – Follow-up on critical findings
Has a statewide procedure been established to assure that critical findings are addressed in a timely manner? Is FHWA periodically notified of the actions taken to resolve or monitor critical findings?

Compliance (C): Yes.

Substantial Compliance (SC): Critical finding procedures are followed 100% of the time for NHS bridges. Critical finding procedures are followed for at least 95% of the time for non-NHS bridges. These include notifying the FHWA.

Non-Compliance (NC): No procedures developed. Critical finding procedures are followed less than 100% of the time for NHS bridges. Critical finding procedures are followed for less than 95% of the time for non-NHS bridges. FHWA is not periodically notified.

Conditional Compliance (CC): Adhering to approved plan of corrective action.

Criteria: Documented policies and procedures. Methods for monitoring critical findings and inspection reviews of resolutions. Frequency of notification adhered to.

Assessment Levels

Minimum: Based on Division Office Bridge staff's knowledge and awareness of Agency's critical finding procedures. Review actions taken to resolve or monitor critical findings that have been submitted. Verify notification frequency matches the established procedures.

Intermediate: Review actions taken to resolve or monitor critical findings that have been submitted periodically. Verify notification frequency matches the established criteria. Review established critical finding procedures. Randomly sample using a MOE of 15% and a LOC of 80% to review records, including NHS and non-NHS bridges with critical findings, to ensure issues are properly documented and addressed. There should be some site visits of critical findings to verify status of documentation and if procedures were followed.

In-depth: Review actions taken to resolve or monitor critical findings that have been submitted periodically. Verify notification frequency and documentation follows established critical finding procedures. Randomly sample using a MOE of 15% and a LOC of 90% to review records, including NHS and non-NHS bridges with critical findings, to ensure issues are properly documented and addressed. Perform some site visits of critical findings to verify status of documentation and if procedures were followed.

Metric #22: Inventory – Prepare and Maintain	Metric revised 3/19/12

650.315 (a) – Prepare and maintain an inventory - Does the State prepare and maintain an inventory of all bridges subject to the NBIS?

Population: The population of bridges for this metric is all bridges identified as sample bridges for Metrics 13 through 23. The sample to use for evaluating this metric is all bridges selected for field review.

Compliance Levels

Compliance (C): At least 95% of all the inventory items reviewed are within the acceptable tolerances. Identified items which are not within the acceptable tolerances have been corrected. Errors identified in the safety checks and persistent error reports have been resolved.

Substantial Compliance (SC): At least 90% of the inventory items reviewed are within the acceptable tolerances. Errors identified in the safety checks and persistent error reports have been resolved.

Non-Compliance (NC): Substantial compliance criteria are not met.

Conditional Compliance (CC): Adhering to a FHWA approved plan of corrective action (PCA).

Criteria: An inventory of all bridges subject to the NBIS is maintained. Data collected matches what is required for the Structure Inventory and Appraisal. Data is recorded according to FHWA procedures and is available for collection by FHWA as requested.

Assessment Levels

Minimum: Based on Division Office Bridge staff's knowledge and awareness of Agency's program. Verify Structure Inventory and Appraisal items in the NBI against the information in the bridge file and actual field conditions for the 15 NBI items identified on the Field Review Form. Review the safety related checks and persistent error reports generated during the NBI submittal process.

Intermediate: Same as the minimum level assessment with an additional 10 NBI items from the list of 60 NBI items selected by Division Office Bridge staff based on their knowledge and awareness of the program to evaluate the accuracy of the data. Review the safety related checks and persistent error reports generated during the NBI submittal process.

In-depth: Same as minimum level, but verify 20 additional items from the list of 60 (15 minimum + 20 intermediate) NBI data items against the information in the bridge file and actual field conditions to verify proper coding for the bridges which are selected for field review; or perform an intermediate level review on 30 bridges. Review the safety related checks and persistent error reports generated during the NBI submittal process.

Commentary for Metric #22

Metric 22 is focused on assessing the quality of bridge data in the NBI. This is primarily intended to be assessed by reviewing the NBI data and comparing it to the actual site conditions observed by the Division Office Bridge staff during the field reviews. It should be noted that Metric 12 is also assessed during every field review. Metric 12 is focusing on the four main condition codes resulting from the inspection, whereas Metric 22 assesses other NBI data items associated with the bridge record (and intentionally excludes the condition items already assessed under Metric 12).

Acceptable Tolerance is defined as the allowable variance for an NBI item as identified in the NBIP Field Review Form. These tolerances were developed for the NBIP assessment process based upon safety, access limitations and time constraints during the field review and are to be used in accessing compliance.

Population: The process for identifying bridges to be reviewed for this metric is further explained in the *Fields Review Guidance* in Chapter 2 of the Bridge Program Manual.

If more than 20 bridges are identified for field review, the Division Office Bridge staff may choose to review all of them for this metric or they may limit it to the minimum of 20.

Criteria: During the field review of each bridge, verify that the NBI data which is reported to FHWA is properly coded and reflects what is present in the field. If an item cannot be verified in the field, compare NBI data with available information in the bridge record components. An example of an item which may be difficult to verify in the field is Year Built.

Assessment Levels: The NBIP Field Review Checklist, identifies 15 items which are to be reviewed at the minimum level for each field reviewed bridge.

At the intermediate level the review will include the 15 items identified at the minimum level and 10 additional items. The 10 items to be selected are from the additional list of 60 SI&A items identified in the NBIP Field Review Form. The Division Office Bridge staff shall select the 10 items based upon their knowledge of the program.

Note from T. Everett added 4/12/12: This should say 20 instead of 30. It will be corrected in a future update.

At the in-depth level the review will include the 15 items identified at the minimum level and ~~30~~ additional items. The ~~30~~ items to be selected are from the additional list of 60 SI&A items identified in the NBIP Field Review Form. The Division Office Bridge staff shall select the ~~30~~ items based upon their knowledge of the program.

Regardless of assessment level, review the safety related checks and persistent error reports generated during the NBI submittal process. These reports were developed based on the following criteria in order to identify situations that may reflect an inconsistency in coding, a coding error, or situations that require follow-up:

(1) Item 64 between 2.7 metric tons and 19.9, Item 41 = A, Item 43b<>19, and Item 103 is blank; and

(2) Any bridge with Item 41 coded B.

Errors in the current year file submittal report are expected to be addressed the following year, although a

more timely resolution is optimal. Significant errors and the errors in the two year persistent report are expected to be resolved immediately.

General: When calculating the percentage of items which are within tolerance identified in the NBIP Field Review Form, it is to be the total number of items properly coded divided by total number of items reviewed. For example, if you are performing a minimum level review (15 items) on 20 bridges and you find that after reviewing all the bridges 35 items were improperly coded, the percentage meeting the acceptable tolerance is 88 percent.

15 items per bridge x 20 bridges = 300 items

300 items - 35 items incorrectly coded = 265 item coded correctly

265/300 *100 = 88.3%

If it is determined that at least 95% of the items were coded within the acceptable tolerances, the compliance determination of 'Compliant' is appropriate if the state agrees to resolve all items found to be outside the acceptable tolerance and confirms that the issue is an isolated case. The intent is that all the NBI data is as accurate as possible, so even if a small percentage of errors are found, they should be corrected.

When field verifying NBI data, such as Item 54 – Minimum Vertical Underclearance, it is important not to jeopardize safety. If it is not practical to determine actual field measurements without additional resources, lane closures, flaggers, etc., use your judgment to determine if the measurement appears reasonable. For example, measure the vertical underclearance in the shoulder area of a busy roadway so that it can be compared to Item 54 to determine if it is reasonable. At no time should the review team's or the traveling public's safety be jeopardized.

Background for 2012 changes: The changes to this metric were implemented to improve the method used by the NBIP assessment process to assess the quality of the NBI data. A standardized field review checklist is now provided which will improve FHWA's consistency of the field review. Sampling and assessments for this metric were changed to recognize that this metric can only be meaningfully assessed by reviewing bridges in the field, and also acknowledging the annual NBIP review expectation that a minimum number of field reviews are to be performed each year.

Metric #23: 23 CFR 650.315 Inventory – Update Data

650.315 (b), (c) & (d) – Updating data in the inventory
Does the State enter the SI&A data in the inventory within 90 days of the date for State bridges and within 180 days of the date for all other bridges for inspections, bridge modifications and load restriction or closure status?

Compliance (C): Yes.

Substantial Compliance (SC): At least 98% of all bridges have had inventory data updated in the State's inventory in accordance with NBIS criteria. At most 2% of all bridges have had inventory data updated in the State's inventory no more than 4 months beyond the NBIS criteria.

Non-Compliance (NC): Greater than 2% of all bridges have had inventory data updated in the State's inventory beyond the NBIS criteria. Any bridge delinquent for being updated in the State's inventory by more than 4 months beyond the NBIS criteria.

Conditional Compliance (CC): Adhering to approved plan of corrective action.

Criteria: An inventory of all bridges subject to the NBIS is maintained. Data collected matches what is required for the Structure Inventory and Appraisal. Data is reported according to FHWA procedures and is available for collection by FHWA as requested.

Assessment Levels

Minimum: Based on Division Office Bridge Staff's knowledge and awareness of Agency's program. Generate standard reports on current data and review results.

Intermediate: Generate standard reports on current data and review results. Randomly sample using a MOE of 15% and a LOC of 80% to review records of State-owned and other-owned bridges, and verify data is input into the State's inventory within 90 days for State bridges and 180 days for other bridges.

In-depth: Generate standard reports on current data and review results. Randomly sample using a MOE of 15% and a LOC of 90% to review records of State-owned and other-owned bridges, and verify data is input into the State's inventory within 90 days for State bridges and 180 days for other bridges. Should check year built and initial inspection dates to verify reporting times meet regulation requirements.

Note: The 4 months include 30 days when concerns of severe weather, concern for bridge inspector safety, concern for inspection quality, the need to optimize scheduling with other bridges, and or other unique situations may be cause to adjust the scheduled inspection date.
Note: The criteria for the standard report for current data consider 90/180 days for data update. The criteria for the historic data report consider 10 years of NBI data comparing frequency and inspection dates. Standard report may only give an indicator there is a problem with this metric or metric #6, #7, #8, #9, #10, or #11. Further review may be needed to verify that a deficiency exists.

State Involvement in Review Process:

The NBIS compliance review is the responsibility of the FHWA. While it is FHWA's review, the State should be invited to participate, especially in the field portions. The involvement of State bridge inspection personnel, especially those in a leadership role, has proven over the years to benefit not only the review, but also the relationship between the FHWA Division and State DOT. Reviewing items together fosters a common understanding of the issues, and helps speed acceptance of results and implementation of any needed improvements in the program. It can also be informative to hold interviews with inspection personnel to discuss inspection practices, best practices, inspector needs, etc. Many parts of the review may not readily lend themselves to such cooperative participation, such as data or file reviews, but when it is feasible the State should participate. FHWA must maintain the leadership role in the review and be responsible for documenting the findings. State participation in the review should be acknowledged, but it should be clear that this is FHWA's assessment of NBIS compliance, not a joint FHWA/State assessment.

Because the metrics are assessed as discrete elements of the program, many times the assessment of one or more metrics may be completed well before another metric assessment has even begun. Whenever possible, share the results of each assessment as soon as possible during the year with the State personnel responsible for the bridge inspection program. Assessments are normally a somewhat iterative process. For example, the Division reviews NBI data that indicates some bridges weren't inspected on time. The DBE furnishes the information to the State to verify the data and determine the specific circumstances. The State may provide the DBE with documentation showing the bridges were inspected, but the dates were incorrectly entered. The DBE can then make any necessary corrections to the assessment. The intent here is to make sure the data and facts are clear, even if the State objects to the eventual compliance determination.

Another goal of this process is to allow the State time to respond to compliance determinations, and develop any necessary plans of corrective actions or implementation plans, before the end of the review year. Accordingly, plan to have all assessments finalized with compliance determinations at the 9-month mark, or December 31, as it is currently laid out in the performance year. That allows January through March to get all PCAs or IPs approved, which would move those metrics requiring PCAs to conditional compliance. This designation is significant because it indicates there is an agreed upon plan in place to accomplish the needed improvements in the program.

Appendix

A4-1 FHWA Policy Memorandum:"Bridge Load Ratings for the National Bridge Inventory"

FHWA Policy Memorandum:

"Bridge Load Ratings for the National Bridge Inventory"

Subject: **ACTION**: Bridge Load Ratings for the National Bridge Inventory

Date: November 5, 1993

From: Chief, Bridge Division
Office of Engineering

Reply to Attn of: HNG-33

To: Regional Federal Highway Administrators
Federal Lands Highway Program Administrator

The 1988 Recording and Coding Guide for the Structure Inventory and Appraisal of the Nation's Bridges (Coding Guide) called for the National Bridge Inventory (NBI) updated data for 1993 to report the inventory and operating ratings (Items 64 and 66) in an equivalent HS loading regardless of the loading used to calculate the ratings. To date, not all States have fully complied. This memorandum is a reminder of the requirement, and further discusses the conversion of non-HS ratings to equivalent HS ratings for NBI purposes, and the analysis methods being used to load rate bridges.

Bridge load ratings reported to the NBI weigh heavily in the determination of the Sufficiency Rating. Load ratings are also relied upon and used extensively by the FHWA and others in the preparation of highway needs studies, Congressional reporting, cost allocation studies, truck size and weight studies, and numerous other bridge management tasks. The Department of Defense uses NBI load ratings to determine the adequacy of bridges on defense highways to safely carry special military loadings. States, in addition, use the ratings in prioritizing projects, distributing bridge funds to local governments, posting bridges, and issuing load permits. These uses require that bridge load ratings are reliable, uniformly consistent, and current.

The factors for converting various loadings to an equivalent HS loading are provided in the Coding Guide's Item 67 and Appendix B (paragraph b of the Sufficiency Rating Formula). These factors are neither consistent nor sufficiently accurate to give a reasonable equivalent HS load for inventory and operating ratings, and should not be used for that purpose. Rating calculations using an HS vehicle shall be used, or alternately, current load ratings may be converted to equivalent HS ratings by more exact methods which consider span configuration, continuity, and other appropriate factors.

The National Bridge Inspection Standards (NBIS), 23 CFR 650.303(c), prescribes that load ratings be in accordance with the AASHTO "Manual for the Maintenance Inspection of Bridges, 1983." The most recent version of that AASHTO Manual is the "Manual for Condition Evaluation of Bridges." It was adopted by AASHTO and will be published in December.

Item 64, page 41 of the Coding Guide, advises the States and other bridge owners to anticipate that the FHWA will require a single uniform method to be used to calculate the operating and inventory ratings

reported to the NBI. The AASHTO Manual provides a choice of load rating methods. The methods include the new load and resistance factor (LRFD) rating method, in addition to the traditional allowable stress (AS) and load factor (LF) methods. The AASHTO Manual recognizes that a wide range of ratings may result depending on the method of rating, but it does not address the issue of inconsistency in results using the load rating method.

Of the three rating methods, the LF method is the most suitable for use as a national standard. The AS and LRFD methods are less suitable because of inconsistencies or potential variability in the rating methods. For these reasons, the FHWA has chosen the LF method as the standard for computing load ratings reported to the NBI. The States may, however, elect to use LF, AS or LRFD to establish load limits for purposes of load posting.

The States should be advised that the inventory and operating ratings reported to the NBI for all bridges constructed, replaced, or rehabilitated after January 1, 1994, shall be based on the LF method of rating. In addition, the load ratings of all bridges that require updating in conformity with the AASHTO Manual shall be based on the LF method. The AASHTO Manual states that

". . . As part of every inspection cycle, bridge load ratings should be reviewed and updated to reflect any relevant changes in condition or dead load noted during the inspection." Because of the Federal emphasis on the National Highway System, LF based inventory and operating ratings for bridges on that system shall be reported to the FHWA with the 1995 NBI update.

Apparent discrepancies in load ratings being reported by some States suggests that load rating practices and frequency of review may, in those cases, be at variance with the NBIS and the AASHTO Manual. Regional and Division Offices are, therefore, requested to include load rating practices in their 1994 NBIS reviews, and to report on the practices and status of bridge load rating in each State.

Original Signed by

Stanley Gordon

Follow-up Memorandum:

Subject: **ACTION**: Bridge Load Ratings for the National Bridge Inventory Date: December 22, 1993

From: Chief, Bridge Division Reply to Attn of: HNG-33
Office of Engineering

To: Regional Federal Highway Administrators
Federal Lands Highway Program Administrator

This is a follow-up to our memorandum dated November 5 on the subject topic in which we announced that the FHWA has chosen the load factor method as the standard for computing inventory and operating

ratings for the National Bridge Inventory (NBI). It was also advised that, while load factor ratings are required for the NBI, States may elect to use other methods for the purpose of load posting, such as the allowable stress or LRFD method.

From the reaction to our memorandum, there are a number of concerns and technical issues being raised about the rating of bridges using the load factor method. Some of these will be addressed by the AASHTO "Manual for Condition Evaluation of Bridges" due to be published and distributed this month by AASHTO. However, we would appreciate receiving any comments and suggestions that your office or the divisions may receive from the States.

The AASHTO condition evaluation manual provides guidance on load factor ratings, but not for prestressed, wood and masonry bridges. However, this office is working with the AASHTO Subcommittee on Bridges to develop guidance for bridges built with those materials. Information on the rating of prestressed concrete bridges is also available in the 1989 AASHTO "Guide Specifications for Strength Evaluation of Existing Steel and Concrete Bridges." Our draft guidance has been prepared, and after being reviewed and coordinated with AASHTO, it will be sent to field offices for application by the States.

There have also been concerns expressed about meeting the schedules for rating new or NHS bridges or for those in need of rerating because of condition, replacement or rehabilitation. Our schedule was established in order to complete within a reasonable period of time the rating of all bridges in the NBI, starting with NHS bridges, for an HS (MS in metric terms) vehicle load by the load factor method. If a State is unable to comply with the schedule established in our November 5 memorandum, it is requested that the Division Office discuss the issue with the appropriate State officials and agree upon a plan for accomplishing the load rating of bridges within a reasonable time frame.

An acceptable plan should indicate an active program for rating/rerating bridges beginning in FY 1994, and for the entering of ratings into the NBI beginning with the FY 1995 NBI update due April 1, 1995. The plan should also reflect a concerted effort to complete the ratings for NHS bridges by the FY 1996 NBI update due April 1, 1996. Please advise us of any agreed upon plans for completing the load rating of bridges on a schedule other than that specified in our November 5 memorandum.

Original Signed by

Stanley Gordon

Appendix

A4-2 Guidelines for Estimating Strand Loss in PPC Deck Beam Bridges

GUIDELINES FOR ESTIMATING STRAND LOSS IN PPC DECK BEAM BRIDGES

Prestressed strands incorporated in the PPC Deck Beams shall be disregarded during analysis for load carrying capacity based on the following observed conditions:

LONGITUDINAL CRACKS

1) Cracks observed in the middle area of the beam underside, with or without rust stains or other discoloration of the concrete adjacent to the cracks:
   Disregard all strands from all rows of strands that may be located adjacent to the cracks.

2) Cracks observed along the edges of the beam underside, with or without rust stains or other discoloration of the concrete adjacent to the cracks:
   Disregard at least the strands located adjacent to the edge of the beam in the bottom row of strands. When the crack is extensive in length and its location varies in distance from the beam edge, disregard additional interior strands from all rows of strands that may be intersected by the crack.

3) Two longitudinal cracks observed crossing or meeting:
   Disregard all strands in all rows of strands located between the cracks and one strand from all rows of strands located adjacent to the outer edge of the cracks.

   Note: The intent is to disregard all strands that could intersect the crack and be exposed to air and moisture.

DETERIORATION

1) Exposed strands observed with sound concrete adjacent to and above the exposed strands:
   Disregard exposed strands only.

2) Exposed strands observed with unsound concrete adjacent to and above the exposed strands:
   Disregard exposed strands and all strands located in rows above and immediately adjacent to the area of unsound concrete.

3) Exposed reinforcement bars observed (#3 or #4 stirrups typically extending less than 1-foot in from the sides of the beam):
   Disregard the strands located in the lower row directly above the exposed stirrups. If the concrete is found to be unsound adjacent to the exposed reinforcement bars, disregard all strands in all rows located above the area of unsound concrete.

4) Exposed wire mesh or full width reinforcement stirrup bars observed on bottom of beam:

Judge whether or not the wire mesh or reinforcement bars are in contact with the strands.

- If in contact, disregard all strands in the lower row directly above the exposed wire mesh or stirrups.
- If not in contact but the concrete adjacent to the exposed wire mesh or stirrups is found to be unsound, disregard all strands located above the area of unsound concrete.
- If not in contact and concrete adjacent to the exposed wire mesh or stirrups is sound, do not disregard strands during analysis.

5) Areas of delaminated concrete observed:
Remove all delaminated concrete to determine the depth of concrete deterioration.
   - If reinforcement stirrup bars, wire mesh or strands are exposed, treat as in "1" through "4" above.
   - If no reinforcement, mesh or strands are exposed but there are indications that the exposed concrete is unsound within the affected area, disregard all strands located in the rows of strands above the area.
   - If no reinforcement, mesh or strands are exposed in the affected area and concrete in the area is found to be sound, do not disregard strands in analysis.

6) Wet or stained areas observed on bottom or side of beams:
Closely inspect the wet or stained area to determine the soundness of the concrete.
   - If close inspection indicates that concrete is unsound or delaminated, treat as in "5" above.
   - If close inspection confirms that the concrete is sound, do not disregard strands in analysis.

   Note: Wet and/or rust stained areas should be watched closely. These areas will be the next areas to experience significant deterioration.

Appendix

A4-3 Rating and Posting for Non-analytically Evaluated Bridges

Rating and Posting for Non-analytically Evaluated Bridges

Under unusual circumstances the rating engineer may recommend loading restrictions for structures without a mathematical structural analysis, aka, “gross load posting”. This will only be allowed for uncertain conditions where load capacity calculations are impossible or are not believed to truly characterize the structure. In such cases the engineer may specify a “gross load posting” based on sound “engineering judgment”. Detailed justification for such load ratings must be included with all requests for concurrence with consultant ratings. The IDOT Bureau of Bridges and Structures will make the final determination on the appropriateness of these rating recommendations.

Assigned Inventory and Operating Ratings must be consistent with the required weight limit posting or legal-load restriction assigned under gross load posting. The Load Rating Method (ISIS Item 65) will be reported to the ISIS as “LFD”. When gross load posting is utilized, the HS20 Operating and Inventory rating factors will be reported as 50% and 30%, respectively, of the recommended 5 or More Axle Combination weight limit posting divided by 20. When a single weight limit posting is recommended, the HS20 Operating and Inventory rating factors will be reported as 88% and 52%, respectively, of that value divided by 20. A bridge the engineer does not feel requires posting but may not be utilized by overloads, should be assigned an operating rating factor of 0.90 (a rule-of-thumb lower limit for non-posted bridges) and an inventory rating factor of 0.54.

Suggested HS20 Rating Factors and Required Posting Tonnage for Non-analytically Evaluated Bridges*

Structure Condition	"HS" Rating Factors		Weight Limit Postings (Tons)		
	Inventory	Operating	Single Unit	3 or 4 Axle Combinations	5 or More Axle Combinations
Good to Excellent - No signs of structural deterioration or distress.	1.00	1.66	No Posting Required		
Fair - Initial evidence of structural deterioration or distress. (No restrictions required)	0.75	1.25	No Posting Required		
Poor - Some structural distress. (Legal Loads Only restriction)	0.54	0.90	No Posting Required		
Serious - Advanced structural deterioration or distress evident. (Load posting required)	0.375	0.625	15**	20**	25**
	0.21	0.35	8**	12**	14**
Critical - Severe structural deterioration or distress evident. (Posting for very light trucks and automobiles only)	0.13	0.22	5		
	0.075	0.13	3		

* - Weight limit values are presented only as examples to illustrate the relationship to corresponding HS20 load rating factors. The Operating and Inventory Rating values should be 50% and 30%, respectively, of the recommended "5 or More Axle Combination" weight limit posting. When a single weight limit posting is recommended, use 88% and 52%, respectively, of the recommended weight limit posting. The minimum value for "combination" type vehicle postings are 12 Tons for 3 or 4 Axle and 14 Tons for 5 or More Axle combinations, which is an estimated typical minimum empty weight for these truck configurations.

** - The engineer may alternatively recommend a single weight limit posting (8 Tons and 15 Tons in this example)

Appendix

A4-4 Modeling Bridges with AASTHOWare Bridge Rating (Virtis®)

Modeling Bridges with AASHTOWare Bridge Rating (Virtis®)

I. Conversion of Ratings of Existing Bridge Inventory to Virtis

A. Develop and maintain a priority list of bridges and culverts not yet rated utilizing the Virtis Bridge Load Rating software. Priority is generally based on the highway functional classification (Interstate, arterial, etc.) and truck traffic volume. In addition, bridges that must be structurally evaluated for a proposed overlay or rehabilitation, damage, etc., should be modeled in Virtis for both existing as well as proposed structural characteristics.

B. Obtain plans or detailed field information and any damage inspection reports for the structure(s) to be rated and review the Illinois Structure Information System (ISIS) structure record(s). Some of the ISIS data will need to be entered in the Virtis model.

C. Create a Virtis Bridge Model –

1. In-service bridge – Set up a bridge data file in the Virtis "Ratings" database folder and, using the plans and other information, enter structural data to reflect the current details and conditions. This can be done by creating a new Bridge Model from scratch or by copying a similar model, renaming and modifying it.

2. Proposed new bridge design (new Structure Number assigned) – The Virtis model, may be set up in the Ratings database by Ratings Unit personnel or by Design Unit personnel in the Virtis "Design" database. When complete, Design Unit rating models will be submitted to the Bridge Ratings Unit for review and inclusion in the Ratings database.

3. Proposed reconstruction or rehabilitation (pre-existing Structure Number retained) – A Virtis model for the existing structure should first be developed. A separate Superstructure Definition(s) including the proposed rehabilitation is then created. The name for the proposed Superstructure Definition will include a suffix indicating it is proposed and not yet built (e.g., 2-Span Continuous WPG (proposed). Upon completion of construction, the Virtis model should be modified, with the formerly "proposed" Superstructure Definition(s) activated and the original Superstructure Definition(s) deleted.

D. Execute the rating analysis in Virtis.

E. Document the rating results in a summary report to be placed in the Ratings Unit file and update the Virtis Tracking Database. The Virtis Tracking Database provides a repository of useful Virtis and LARS bridge rating information.

II. Bridge Model Setup – Only one Virtis bridge model will be developed for each structure uniquely identified by an ISIS Structure Number. Each bridge model includes all of the separate superstructure units, called "Superstructure Definitions", included under the Structure Number. The superstructure units are separated by joints at piers that interrupt the structural continuity of the overall structure. Joints at a locations where a hinge or link & pin system joins discontinuous ends of the superstructure members are included within a Superstructure Definition.

Superstructures with longitudinal joints should be modeled as a single unit if it seems probable the joint may be eliminated in the future. Otherwise, they may be modeled as separate Superstructure Definitions if desired.

A. Bridge Explorer – Bridge Explorer contains a listing of all bridge models included in a Virtis database. A limited number of information fields are displayed for each bridge including the sequential BID number, Bridge Id, Bridge Name, Facility Carried, etc. By default the 500 most recently entered bridges are listed in ascending order. The number of bridges displayed and sort order may be changed by selecting, from the menu, View / Preferences / Bridge Explorer tab. For the Ratings Database, it is recommended the number of records displayed be set to more than the expected maximum number of bridges to be modeled. It is also recommended that the bridge list be sorted in descending order, showing the most recently entered bridge models first.

B. Analysis

1. Vehicles:

   Standard Vehicles – Inventory and Operating Load Factor and Allowable Stress Ratings (LFR & ASR) are computed using the HS20 truck when performing the Design Load Rating. For Load and Resistance Factor Ratings the HL-93 loading is used. Legal Load and Routine Permit Ratings are based on truck configurations standardized according to IDOT policy. Within Virtis these vehicles are designated as follows:

Vehicle Type	Rating Type	Virtis Vehicle Name
2-Axle Single Unit	Legal Load	Type 2 (IL/15.75T)
3-Axle Single Unit	Legal Load	Type 3 (IL/22T)
4-Axle Combination	Legal Load	Type 3-S1 (IL/29.75T)
5-Axle/36T Combination	Legal Load	Type 3-S2 (IL/40.75T)
5-Axle/40T Combination	Legal Load	Type 3-S2 (IL/40T)
3-Axle/34T Single Unit	Permit	Type 3 (IL/34T)
4-Axle/38T Single Unit	Permit	Type 4 (IL/38T)
5-Axle/50T Combination	Permit	Type 3-S2 (IL/50T)
6-Axle/60T Combination	Permit	Type 3-S3 (IL/60T)

   The default loading for typical rating analyses to be performed by a user should be set in View / Preferences / Analysis. An analysis varying from the default may be set to use the pre-configured vehicles from the menu at Bridge / Analysis Settings. Vehicles are defined in and selectable from the Vehicles section of the Virtis Library.

   Special Vehicles – When a need arises to perform a Virtis Special Permit Rating the proposed permit vehicle will need to be created under “Vehicles” in Library Explorer. Within the Vehicles Library, entries for Base Vehicles have been created, which can be modified to model specific permit vehicles. Also, Virtis has provision for entry and analysis of Non-Standard Gage vehicles. Special vehicles entered for a single special or permit analysis should be deleted from the Library when the analysis is completed.

2. Method – For in-service bridges designed according to the Load Factor Design (LFD) or Allowable Stress Design (ASD) methods, the load ratings are

normally computed using the Load Factor Rating (LFR) analysis. Typically, load ratings for a bridge designed according to the Load Resistance Factor Design (LRFD) method should be computed using Load Resistance Factor Rating (LRFR).

3. Member Selection – Load rating analysis can be initiated from the Bridge Model "tree" by right-clicking various tree elements (listed below) and selecting "Analyze":

   - Member Alternative.
   - Member and Superstructure Definition. Only those Member Alternatives pre-selected by checking both "Existing" *and* "Current" in the applicable Member window will be analyzed.
   - Bridge ID, Bridge Alternatives, Superstructures and Superstructure Alternatives. Analysis will be performed on Superstructure Definitions linked under Superstructure Alternatives. Note: Only Superstructure Definitions judged as potentially critical to the overall bridge rating should be linked.

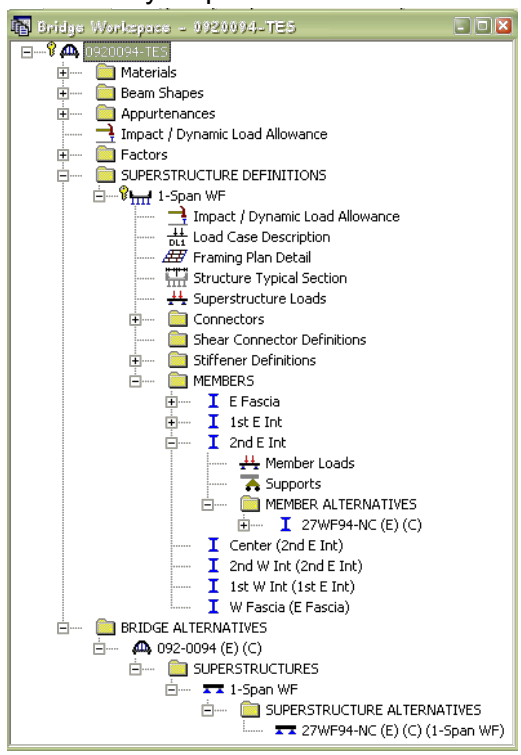

4. Rating analysis of one or more bridges may be initiated by selecting them from Bridge Explorer, right-clicking one of the selected bridges and then selecting "Rate". For a bridge to be rated in this way, it must have a Superstructure Definition linked under Bridge Alternatives. Additionally, a truss or girder-floorbeam-stringer type bridge model must be checked out before the analysis will run from Bridge Explorer.

5. Points of Interest (POI) – Generally, a Virtis Member Alternative should be set, under Control Options, to generate POI's at section change points. This will direct the analysis to automatically analyze locations where the structural cross-section changes. There are two instances when an explicitly defined POI would be designated:

   - To specify a point-of-interest that will transfer to the Bentley-LARS analysis system used by the Bridge Ratings Unit for evaluation of overweight permit loads on groups of bridges – LARS does not automatically generate an analysis at member section change locations. A section change location potentially critical to the overall load rating of the member must therefore be explicitly identified. This should be done in the Virtis model prior to its export to LARS.
   - To significantly reduce length of time to perform the analysis – After the critical locations along a member have been determined, the analysis may be restricted to only analyze those points. This reduces the overall

analysis time since the program will no longer analyze each tenth point and all section changes. This becomes more of a benefit when the number of continuous spans becomes greater.

Typical point of interest locations are at steel flange plate transitions, theoretical coverplate ends (Bridge Manual – Figure 3.3.6.1), reinforcement terminations, composite zone boundaries, and deterioration locations. It should also be specified which side of the POI (left or right) is being analyzed. When the POI is related to reinforcement in concrete or composite zones, it should be located approximately 0.1' away, on the weak side of the section change.

6. Haunch – Normally, use the minimum haunch height (0.5") plus any additional that may be justified in consideration of span length, beam camber, etc. Some of the typical values for haunch height are: steel WF – 0.5"; steel plate girder – 0.75"; P/S beams – 0.5". These values may be increased at the discretion of the rater.
7. Additional Self-load – This is only input for steel beams. Leave it blank for all other types. Normally, use a value between 10% and 20%, but greater or lesser values may be used if the rater judges it to be appropriate.
8. Deck Reinforcement – It must be specified for continuous prestressed concrete I-beams and bulb-tees and for steel composite beams when the deck is connected to the beams by shear connectors for the full length of the beam. It should *not* be included for steel composite beams non-composite over the interior supports unless originally included in the composite beam design, or for non-composite superstructures.
9. Sustained Modular Ratio Factor – Leave at default value of 3.
10. Deck Exposure Factor – This is a factor similar to crack control but for LRFD/LRFR. It is normally set at 0.75.
11. Live Load Distribution – For interior beams, the live-load distribution factor (LLDF) is computed according to the AASHTO Standard or LRFD Specifications. Exterior beams and beams adjacent to longitudinal deck joints shall have the LLDF computed using a simple span analogy, also referred to as "lever-rule", with wheels placed to obtain the highest possible value. For interior beams where curbs or other barriers on the deck prevent wheels from being located directly over them, the simple-span analogy may be used if desired. For LRFR, the LLDF may be calculated by the either the rigorous or simplified methods presented in the AASTHO LRFD specifications or using the simplification of the IDOT Bridge Manual. It should be noted that the computations by the Virtis software utilize the rigorous method. It is recommended, for load rating purposes, that the method producing the lowest values for the LLDF be used.
12. Future Wearing Surface – Only include when performing a design evaluation. The final model to be kept in the Ratings database should reflect the bridge as it actually exists or will be constructed in the field. It is recommended that the Load Case used for future wearing surface evaluation be deleted from the Virtis model.
13. Bridge Deck Concrete Overlays – The concrete overlay should be entered as a wearing surface. As a routine practice, the "Total deck thickness" recorded

in the Structure Typical Section window and the deck "Structural Thickness", under "Deck Profile", shall be the thickness of the original slab remaining after scarification. In special cases, as determined by the BBS, the concrete overlay may be included with the original deck slab in the Structural Thickness so in the analysis it is part of the deck structure, therefore contributing to composite deck action.

C. Bridge ID Window:

1. Bridge ID – Record the Structure Number without hyphen (e.g., 0580017).
2. NBI Structure ID – Record the 7 digit IDOT Structure Number with hyphen. (e.g., 058-0017)
3. (Bridge) Name –
   a. Record the initials of the rater and the most recent checker separated by a "/" (if applicable). e.g., (TES/MKT). The initials of no more than two individuals should be included.
   b. Within parentheses, type the name of the structure, e.g., (Red Skelton Bridge) or (I-57NB over Cache R.). Common or logical abbreviations should be utilized to keep the length of this field as short as reasonably possible.
   c. In a second set of parentheses record an abbreviation for the structural type of the main spans of the bridge, e.g., continuous concrete slab = (CCS), prestressed concrete bulb-tee = (PST), etc. This provides assistance when looking for an example structure.
4. Description – Record pertinent information about the structure: Type of structure, main member designations w/number and spacings; deck thickness, width, parapets/rails, wearing surface; construction information pertinent to the load rating; designer identification. Note: This information can be very useful and time saving for future evaluations.)

   Example:

   3-Span continuous w/6 lines of non-composite 33WF130 @ 7'-2 1/2"oc.
   Deck: 7 1/2" slab + 2 1/4" MSC WS; 42'-0"o-o; 38'-6" rdwy; GM parapets w/R-17 alum. rails.

   Constr: Orig. 1970 - FAI 24, Sec. 64-2B-1, Sta. 94+63.00, Contr. #28061; Rehab. 2002 - Sec. 64(1,2,2-1,3-1,3)RS-1,BSM, Contr. #98619 (1/2" deck scarification & 2-1/4" MS concrete overlay).

   Designer: Bridge Office (F. Stone/G. Roncancio)
5. Inventory Fields – These fields relate to NBIS Items of the same name, e.g., Location (Item 9), Length (Item 49), Route Number (Item 1A&B), etc. The presence of this information facilitates searching and organization of bridge models. These fields should be recorded to the extent possible. It is also recommended the "Elevation" field under the "Global Reference Point" tab be coded for a location over the principal feature crossed along the profile grade line, especially since this information is not readily available elsewhere in an electronic format.
6. Default Units – Select "US Customary" or "SI / Metric". This will establish the units for all subsequently created Superstructure Definitions and Member Al-

ternatives. The units for Superstructures and Members created prior to a unit change in this field will not be affected. Therefore, if it is desired to change these from their original unit designation it will have to be performed individually for each separate Superstructure and Member.

In all cases, prior to final analysis and storage in the Ratings database, *all unit defaults in a model must be changed to U.S. Customary* to insure ratings for special/permit vehicles are reported in U.S. tons rather than in metric tons.

It is recommended that Default Units always be set to US Customary. If useful, SI / Metric units could then be temporarily set from the toolbar for entry of metric hard-coded fields such as new bridge deck widths & thicknesses. *Special Note: Elements with metric designations on designs, but manufactured and supplied according to U.S. Customary measurements (soft converted), such as steel & prestressed concrete beams, reinforcement, etc., should be entered in Virtis using the equivalent U.S. Customary size or element. This also applies to pre-existing dimensions in rehabilitation/reconstruction plans, such as beam spacings, deck dimensions, etc..*

D. Materials, Beam Shapes, Appurtenances

Select applicable items by doing a “Copy from Library”. e.g., Double-click “Structural Steel”, then click “Copy from Library” and select the desired structural steel type.

If a desired item is not available in the Library, it should normally be created there. To do this, call up Library Explorer, select the appropriate folder in the list, create a new item and fill in the data for it. This may also be done by copying and modifying an existing item and saving it as new. The new item will now be available to select and add to the bridge model.

E. Impact / Dynamic Load Allowance – This can be used to initially modify the impact factor for all Superstructure Definitions yet to be created. Modifying the impact factor at this location will not change the impact factors for Superstructure Definitions that already exist.

F. Factors – The Virtis default load and resistance factors may be modified for LFD, LRFD and LRFR. Use of this facility is extremely rare.

G. SUPERSTRUCTURE DEFINITIONS – Double-click the Superstructure Definitions folder and select the appropriate superstructure type. The possibilities are Girder System, Girder Line, Floor System, Floor Line, Truss System and Truss Line. Use a “System” definition if possible and practical. RC-Slabs and some odd configurations will have to be modeled as Line Girders. Curved girder structures should be modeled as a Girder System if modifications can be made to make the individual beam lines approximately the same lengths as in the plans or if the degree of curvature and beam configuration is such that it can be reasonably modeled according to the longest interior beam line.

1. Girder System Superstructure

a. ‘Girder System Superstructure Definition’ Window

i. Under the Definition tab record a logical descriptive name for the Superstructure Definition, e.g., 2-Span Continuous WF. Select Default Units and Member Alt. Types and enter Number of spans, Number of

girders and Span Lengths. For prestressed members enter 70% for the Average humidity. Selections under the Analysis tab should be left at their default settings and the Engine tab should be ignored.

ii. Frame Structure Simplified Definition – By selecting this check box, input of a frame structure is enabled. It opens selection boxes in the Superstructure Definition Window to designate which supports are framed and creates a Frame Connections tab in the Framing Plan Details window. It is primarily intended to provide for system computation of the frame (rotational) constant for a concrete or steel superstructure framed into a concrete pier. Framing into a steel pier column may be specified by separately calculating the rotational spring constant and entering it under the Frame Connections tab or for each of the Members under the "Elastic" tab of the Supports window.

iii. Deck Type – When a deck type other than concrete is to be specified it must be selected upon initial creation of the Superstructure Definition and may not be changed later. The choices are Concrete (default), Timber & Generic.

b. Impact / Dynamic Load Allowance – This can be used to initially modify the impact factor for all Member Alternatives yet to be created. Modifying the impact factor here will not change the impact factors for Member Alternatives that already exist.

c. Load Case Description – Type a Load Case Name for each general load case classification, such as "Sidewalks/Parapets/ Rails", "Wearing Surface", "Curb", etc. The Description field may be left blank. Assign Stage 1 for loadings applied to the superstructure before the deck-slab hardens or Stage 2 for superimposed loads applied after placement of the deck. Under Type, select the appropriate loading type, usually either "D,DW" for wearing surfaces or "D,DC" for other dead loads.

d. Framing Plan Detail

i. Layout tab – Record the skew at each support, negative for RHA, positive for LHA and Girder Spacing. Girder Spacing Orientation is usually entered as "Perpendicular to girder". When flared beam lines are to be entered, "Along support" must be selected.

ii. Diaphragms – Under the Diaphragms tab, enter the diaphragm/cross frame spacing for each girder bay. Diaphragm entry can be copied from one girder bay to another. The Diaphragm Wizard may be used in many cases, which can significantly reduce data entry effort. The diaphragm loads are typically left blank for steel girder systems since these loads are included in the Additional Self Load value described later.

iii. Frame Connections (for Frame Structures only) – Enter information related to moment restraining frame connections in rigid-frame type bridges.

iv. Schematic View – With the program focus on Framing Plan Detail folder (highlighted), the Framing Plan View can be called up using the "View schematic" icon on the toolbar or by selecting "Schematic" in the Bridge menu. This provides a good graphical check for Framing Plan Detail entry.

e. Structural Typical Section

i. Deck – Enter the dimensions for distances from the deck edges to the superstructure definition reference line (usually the Profile Grade line from the plans) and the deck overhangs measured from the centerline of the outside beams. *Note: These dimensions are to the edge of deck and not necessarily to the outside of the parapets.* The Superstructure definition reference line must also be assigned, "within", "to the left of" or "to the right of" the deck as applicable.

ii. Deck (cont'd) – Select the material for Deck concrete. For Total deck thickness, enter the thickness of the deck slab taking into account any scarification performed. "Deck crack control parameter" (ASR & LFR) and the "Deck exposure factor" (LRFR) are typically 130 kips/in and 0.75, respectively, which is for the top reinforcement in the deck-slab based on severe exposure conditions. Enter "Sustained modular ratio factor", which is typically 3.0 for steel beams and 2.0 for concrete members.

iii. Parapet / Median / Railing / Generic / Sidewalk – Select the Name and Load Case for whatever appurtenances are supported by the deck as well as their locations and orientations relative to the deck edges. *Note: Parapets and sidewalks commonly slightly overhang the edge of deck requiring input of a negative offset.* Concrete parapets with non-vertical back faces should be entered under "Median" so the back slope may be modeled, which cannot be done under Parapet. Sidewalks are usually entered under the Parapet or Median tab.

iv. Lane Position – After entering all of the deck appurtenances select the Lane Position tab and click on the Compute button. This will generate the travelways on the deck. The travelways can be manually entered or altered, as appropriate.

v. Wearing Surface – If a wearing surface is present on the deck, enter a name for the material, e.g., Microsilica Concr., Bituminous Concr., etc., a description if desired, thickness, density and applicable Load Case. If the structure is being analyzed for a future wearing surface, simply designate it as FWS or similar. *Note: Remember to eliminate future wearing surface when the model is finalized and is saved in the ratings database.*

vi. Schematic View – From the Bridge Workspace, with the Structure Typical Section folder highlighted, the Bridge Typical Cross Section View can be called up using the "View schematic" icon on the toolbar or by selecting Schematic under the Bridge menu item. This provides a useful graphical check for Structure Typical Section entry.

f. Superstructure Loads – Select the DL Distribution tab (the other tabs are not used in load rating) and make selections as necessary. These are not normally changed from the default values, i.e., 'By tributary area' for Stage 1 and 'Uniformly to all girders' for Stage 2. When dead load distribution must be modified for superimposed (Stage 2) dead loads it should be done by manually entering the appropriate values under Member Loads. This is accomplished by zeroing out the unit weight of the af-

fected dead load element and manually entering the load for each Member assumed to carry the load.

g. Connectors & Shear Connector Definitions (Steel) – Ignore

h. Stiffener Definitions (Steel) – For both transverse & bearing stiffeners enter as indicated on plans. For plate stiffeners, only the thickness and width need be entered. It is recommended that stiffeners be named according to conventional nomenclature, e.g., "PL-1/2x5" (plate), "L-5/8x6x4" (angle). Be sure to correctly indicate whether transverse stiffeners are on one side of the web (*single*) or both sides (*pair*). Bearing stiffeners are not normally included in the load rating of existing, in-service bridges. In contrast to routine in-service load ratings, when checking new bridge designs, the bearing stiffeners should be included in the rating. This is controlled in Virtis by the 'Include bearing stiffeners in rating' check-box under the LFD rating section under the Control Options tab of the Member Alternative Description window.

i. Stress Limits (Prestressed Concrete) – Give a name relative to the material, e.g., "PS Concr.", "6 ksi Concr.", etc. Note: In the Stress Limit Sets table, Virtis erroneously uses $3*\sqrt{f'_{ci}}$ as its default for Initial Allowable Tension. Although this varies from the $7.5*\sqrt{f'_{ci}}$ specified in the IDOT *Prestressed Concrete Manual*, it may be ignored since initial allowable stresses are not relevant to the rating analysis.

j. Prestress Properties (Prestressed Concrete) – Give a name relative to the material, e.g., "PS Strands", "1/2" LR Strands", etc. and select the appropriate Prestress Strand material. All other fields may be ignored or are automatically filled in by the program.

k. Shear Reinforcement Definitions (Reinforced & Prestressed Concrete)

   i. Vertical – Name according to the plan designation, e.g., s1, G1, 3/4" Thr Rod, etc. and enter the appropriate values for Material, Bar size, Number of legs and Inclination. Note: The ¾" diameter threaded rods with f_y=50ksi specified at the ends of PS I-beams should be modeled as #5 reinforcement bars with f_y=60ksi.

   ii. Horizontal (Prestressed Concrete) – Ignore.

l. Bar Mark Definitions (Reinforced Concrete) – The Bar Mark reinforcement information is used in the Schedule-based Girder property input method used for RC Tee and Slab bridges. Name the bars as they are designated on the plans. Bars with a single hook, used at each end of a slab or beam, will have to be differentiated by adding "start" or "end" (or similar) to the bar name. Additionally, enter the appropriate values for the Material, Bar size, Bar type and Dimension fields. Lines of same size reinforcement extended by laps continuously from end to end of a member may be entered as one bar for the full length of the superstructure. Type 2 bar definition should be avoided, since the angled portion of Type 2 bars is ignored by Virtis. A suitable workaround is to define a Type 2 shape using appropriate dimensions in Type 3 model.

m. MEMBERS – Assign a name to the member in the "Member name" box. This Name should be related to its beam number designation in the bridge design plans and location, e.g., 3 - 2nd E Int, etc. Also, for members critical to the overall bridge Inventory and Operating Ratings, suffix

the member name with "-x" (for example, "3 - 2nd E Int-x"). For all members that may be critical to the standard load ratings or permit evaluations select both "Existing" and "Current" boxes, otherwise only check "Current". A member identical in properties and loadings to a previously described member should be marked as such by use of the "Link with" box.. Pedestrian load is normally left blank.

i. Member Loads – Enter the loads not automatically calculated from structure geometry. Member Loads are classified according to Load Case and may be entered as uniform, variably distributed, concentrated and/or settlement.

   (1) Uniform – Linear loads that do not vary along the length of a span or the entire member.

   (2) Distributed – Linear loads that may vary between two points on the member or do not extend the entire distance between supports. e.g., The wearing surface on a variable width roadway surface or the deck over flared beams modeled in Virtis with the beams parallel.

   (3) Concentrated – Point loads at any location along the member, e.g., concrete diaphragms between two concrete beams, or the reaction of an adjacent span on a steel girder cantilevered over a pier.

   (4) Settlement – This value is entered in inches for vertical or horizontal movement or in radians for rotational movement. This can be used for applying the settlement of a support under a continuous member to determine its affect on the member load rating.

ii. Supports – The Support Type may be modified if it's desired to match the locations of expansion and fixed (coded as "Pinned") supports as shown on plans, although this is usually not necessary. For specialized purposes, Virtis provides for modification of support conditions, both with translational & rotational constraints and by applying translational and rotational spring constants. e.g., The "Y" & "Z" constraints would be unchecked where a beam is cantilevered and therefore is free to deflect vertically and rotationally. *Note: Making all bearings pinned or all expansion has no affect on the rating.*

iii. MEMBER ALTERNATIVES

   (a) MEMBER ALTERNATIVE DESCRIPTION Window – Assign a name for the member alternative reflecting the size and type of member used. For steel members, make sure to indicate if the section is composite, non-composite, and if it has cover plates (suffix the member alternative name with "-Comp", "-NC", and "/CP" respectively). Examples: "W24x84-Comp", "42" WPG-NC", "30WF108/CP-NC"

   (b) Description tab

      (i.) Default Units – Select US Customary or SI / Metric as most appropriate for data entry. Prior to performing the

analysis and when the model is finalized Default Units should always be set to US Customary.

(ii.) Girder property input method – Upon initial creation of steel plate and rolled beam or reinforced concrete slab and tee-beam Member Alternatives, the choices are Schedule based and Cross-section based. Schedule based is the default and should always be used. After the Member Alternative has been created the input method cannot be changed. For all other member types, the input method is pre-set and cannot be altered.

(iii.) Additional Self Load – Typically, enter a value between 10% and 20% for most multi-beam steel structures. Higher or lower values may be used relative to the amount of non-primary steel used. If loads from diaphragms or cross-frames are entered separately Additional Self Load should be reduced or omitted as determined by the rater.

(iv.) End bearing locations – Record the distance from the centerline of bearing to the end of the structural member at the left (beginning) and right (end) of the member.

(v.) Default rating method – Load factor (LFD) is the default selection. Allowable stress (ASD) and Load Resistance Factor (LRFR) may also be selected as applicable.

(vi.) Crack control parameter (Z) – This variable is only available for concrete structural members and applicable to LFD rating. Enter a value according to AASHTO Standard Specifications, 8.16.8.4 – Distribution of Flexural Reinforcement. A value of 130 is used for severe exposure conditions and 170 for moderate exposure.

(vii.) Exposure factor – This variable applies to LRFR and is described under Article 5.7.3.4 of the AASHTO LRFD Specifications. A value of 0.75 is used when there is an "increased concern of appearance and/or corrosion" and 1.00 for a "reduced concern(s) of appearance and/or corrosion".

(c) Specs tab – Select the analysis engine program, under the Analysis Module column, to be used for each Analysis Method Type listed (ASD, LFD, LRFD & LRFR). All IDOT bridge rating analyses utilize the AASHTO analysis engine. Under normal circumstances, "System Default", in the Selection Type column, should be selected for all of the Analysis Method Types. The selections under the Spec Version and Factors columns are set as the most recent specification and are unchangeable for System Default. The specifications indicated in these two columns may by modified if the Selection Type is set to "Override".

(d) Factors tab

(i.) LRFR – The Condition Factor and System Factor may be varied to meet the applicable circumstances of the bridge being load rated.

(ii.) ASD Factors – Enter ratios to override the normal allowable stress ratios used for the different structural materials used in the bridge.

(e) Engine tab –Ignore.

(f) Import tab – Ignore.

(g) Control Options tab – This facility enables the user to customize analysis parameters, including points-of-interest, shear and moment computation, etc. Many of the parameters only require change from the default values as decided by the user on a case-by-case basis. Parameters that may be selected vary between analysis methods (LRFD, LRFR, LFD & ASD) and between structural materials (Steel, Prestressed and Reinforced Concrete and Timber). Items that may require revision from default selection or are commonly modified are as follows:

- Points of Interest – These three boxes (Generate at tenth points, section change points & user-defined points) are usually all selected. Once the critical rating points for standard rating, legal-load and posting vehicles are determined, it may be advantageous to explicitly define those locations as points-of-interest and select only the “Generate at user-defined points” box. This will reduce analysis time, especially for members with large numbers of continuous spans.
- Include bearing stiffeners in rating (Steel LFD only) – This is normally unselected for in-service bridges, which is contrary to the default value. When evaluating new designs of bridge members with bearing stiffeners, this field should be selected.
- Allow plastic analysis – For steels with Fy ≤ 70ksi, this box should be checked.
- Ignore long. reinf in negative moment capacity – This should be selected for a longitudinal steel beam when the deck is non-composite in the negative moment portions.

(2) Default Materials – Set to the most common material types for the bridge member being input.

(3) Impact / Dynamic Load Allowance – The Standard Impact Factors and LRFD Dynamic Load Allowance are set according to AASHTO guidelines but may be altered by the user if appropriate. This window is usually ignored.

(4) Live Load Distribution

(a) Standard Tab – In most cases, for Girder, Floor and Truss System Superstructures, the Live Load Distribution Factors (LLDF) are computed by Virtis and used without modification under the selection, "Use Simplified Method". Select "Compute from Typical Section" to generate LLDF values. The LLDF for exterior steel beams uses the lever-rule analogy, which is preset as the desired method under the Bridge Workspace tab of the View/Preferences window. The values for longitudinal beams where a wheel line can't be placed directly above that beam may also be re-computed using the lever rule at the discretion of the rater. Under the "Use Advanced Method" selection, LLDF are entered in separate displays according to Deflection, Moment or Shear selected in the "Action" drop-down box.

(b) LRFD Tab – LLDF may be entered manually but the preferred method is to perform the Virtis computation by clicking on the "Compute from Typical Section…" button.

(5) Hinge Locations (Steel & Reinforced Concrete) – If hinges (including pin & links, suspended bearing & seat, etc.) are present, they should be located using this facility. Hinges in the main girders of a Floor System/Line Superstructure cannot be modeled in Virtis.

(6) Splice Locations (Steel) – This window provides for locating of beam splices but is not used and may be ignored.

(7) Shrinkage / Time (Prestressed Concrete) – For rating purposes this window may be ignored.

(8) Girder Profile (Steel – Plate & Rolled) – Enter the geometric and material properties of the steel beam elements. To model a beam line with both plate and rolled elements the Plate Girder type must be used. Rolled beams with coverplates on the inner surfaces of the flanges may be modeled as equivalent welded plate girders.

(a) Plate girders – Entry is according to widths, thicknesses, start points and lengths. Straight and parabolic haunches can be specified.

(b) Rolled beams – Enter by selecting a steel shape created according to standard beam tables. Most beam shapes are available from the Steel Shapes Standard or Agency tables in the Virtis Library Explorer. If present, cover plates are also entered according to their widths, thicknesses and *effective* start and end points & lengths. *Note: The effective termini of welded coverplates are defined in the IDOT Bridge Manual (Figure 3.3.8-1) as 1½W (coverplate width) from the actual end of the coverplate.*

(9) Cross-Sections (Steel – Built-up) – Assign a descriptive name for the Cross-Section, e.g., "Base-Section", "1 CovPL Section", etc.

(a) Dimensions – Enter the base dimensions and angles of the built-up girder, including web height and thickness, overall girder height. Angles should be selected from what already would have been entered under Steel Beam Shapes. Also to

be specified are girder web and angle materials, web bolt/rivet size and number and angle orientation.

(b) Top & Bottom Cover Plates – Specify Welded or Bolted/Riveted, hole size & number and position, width and thickness of cover plates.

(c) Slab – Enter actual and effective thickness and tributary and effective slab width over the girder and f'c and n for the slab concrete. Slab reinforcement should be ignored unless the deck is composite with the deck in the negative moment areas.

(d) Haunch – Enter the haunch depth and width and specify its point of reference (normally from the top of the top flange).

(10) Cross-Section Ranges (Steel – Built-up) – Enter the locations of the cross-sections previously created. Typically, the end limits of the riveted coverplates are entered at effective locations on the cover plate, one (1) foot from the actual ends. If applicable, enter the limits of the shear connectors. It is not necessary to explicitly describe shear studs and spacings.

(11) Beam Details (Prestressed Concrete):

(a) Span Detail – Select the pre-defined Beam Shape, Girder Material*, and Prestress Properties. "Use Creep" will be set to "No". Set "n" according to the beam concrete f'c (6.7 for f'c=5ksi, 6.4 for f'c=6ksi, etc.). Beam projection past the centerline of bearing is measured parallel to the length of the beam. **Note: If the Concrete Material specified for the Concrete Stress Limit Set, which is entered for this Member Alternative, is changed, the Girder Material will have to be separately changed to match it.*

(b) Continuous Support Detail – Enter the distance parallel to the length of the beam from the centerline of bearing to the centerline of piers.

(c) Stress Limit Ranges – Enter the previously named Stress Limit Set for the beam concrete along with the span and length from end to end of beam.

(d) Slab Interface – Normally no entry is necessary.

(e) Continuity Diagram – Normally, the box marked, "Ignore positive moment at supports in ratings" may be checked. This should not be considered as applicable to the load rating. It may be desired to enter these values when reviewing a bridge design, but the "Ignore…" box should then be checked after the review has been completed.

(12) Strand Layout (Prestressed Concrete) – Normally, the boxes marked, "Strands in rows" and "Symmetry" should be checked (default). For Illinois beams, the Strand Configuration Type will be either Straight/De-bonded or Harped. For Harped strands the harp point measured from the end of the beam will be entered.

The radius of the harp bend is optional (a value of 0.5" is suggested). For both straight and harped strands, select the locations of the strands at midspan. For harped strands, click on the Left end button and select the locations of the harped strands. The relative locations of strands in the cross-section diagram should match, as nearly as practicable, those designated on the original shop plans (if available) for the beam.

(13) Girder Profile (Reinforced Concrete Tee-beams):

(a) Section – Enter the cross-sectional tributary dimensions of the beam and slab at the cross-section diagram. In the "Top Flange" box, enter the concrete Material, Modular Ratio, Eff. widths (Standard & LRFD) and Struct. thickness. The Material and Modular Ratio in the "Other Parts" box will normally be the same as for the Top Flange.

(b) Web – Enter the web depth (dimension between top of slab and bottom of girder stem), depth variation mode (none, straight, parabolic) and range start and length for each cross-section range.

(c) Reinforcement – The reinforcement is entered as unique "Sets", which are denoted by a number (starting at "1"). Each set is defined by entry of a pre-defined Bar Mark designation, orientation ("Invert")*, its vertical placement measured from top or bottom of girder**, the total number of bars within the section, Bar Spacing‡, Side Cover‡, reference Support Number, start Distance & Direction left or right of the reference support, and whether Fully Developed†.

**The "Invert" box only affects bent bars (Type 2 & 3) reversing their vertical orientation, which would place the middle horizontal portion on the bottom instead of on the top.*

***It is recommended, if possible, the location of all bars be measured from the bottom so future modification due to deck slab scarifications & concrete wearing surface is kept to a minimum. This cannot be done for the top bars of haunched beams.*

†Bars should always be marked "Fully Developed", otherwise Virtis/BRASS applies AASHTO development criteria, which produces erroneous results due to BRASS methodology.

‡Because development length criteria must be ignored, what is coded under Bar Spacing and Side Cover becomes irrelevant as well.

(14) Deck Profile (Steel):

(a) Deck Concrete – Click the "Compute from Typical Section" button to generate the values for all of the fields related to the effective deck slab. The information included under this tab is concrete Material, Support Number (related to the range start), Start Distance, range Length, End Distance, Structural Thickness, Effective Flange Width (Standard & LRFD), n. If the superstructure is composite with the deck, the deck concrete di-

mensions must be calculated and entered after the Shear Connector tab information is entered.

(b) Reinforcement – Ignore for steel superstructures unless the deck is composite through the negative moment regions.

(c) Shear Connectors – Enter the Span, Start Distance (from the left CL bearing of the span) and Length for each range of shear connectors. For Connector ID, enter "Composite". It is not necessary to explicitly specify the shear studs and spacings.

(15) Deck Profile (Prestressed Concrete):

(a) Deck Concrete – Click the "Compute from Typical Section" button to generate the values for all of the fields related to the effective deck slab. The information included under this tab is concrete Material, Support Number (related to the range start), Start Distance, range Length, End Distance, Structural Thickness, Effective Flange Width (Standard & LRFD), n.

(b) Reinforcement – For continuous Prestressed Concrete structures Virtis requires reinforcement to be modeled in the slab over the interior supports. Each reinforcement bar group should be entered under this tab. This typically includes one group each of bottom and top slab reinforcement that extends from abutment to abutment and an additional group of top slab reinforcement over each interior support terminating just beyond the inflection points. These latter bars should be located just as they are on the plans. The fields for this tab are, reinforcement Material, Support Number, Start Distance (+ or - ft.) relative to the Support Number, Length, End Distance, Bar Count, Bar Size, Distance from top or bottom of slab, Row (top or bottom of slab), and Bar Spacing. As with reinforced concrete beams, it is preferable to indicate the vertical position of both top and bottom reinforcement by its distance from the bottom of the deck slab.

(16) Haunch Profile (Steel) – There are various haunch entry options for steel beam superstructures, varying according to whether or not the flange is embedded and the points of reference for measurements to be entered. While the dimensions may be varied at any point along the length of a flange, typically they are kept the same for the entire length. Typical average haunch depths are 0.5" – 0.75" for rolled beams and 0.75" to 1.0" for plate girders. The common current deck overhang detail at outer beams cannot be entered exactly as it is. It should therefore be entered as an embedded flange with the dimensions labeled "Z3" and "Z4" both equal to the distance from edge top flange to outer edge of deck, "Y1" as the haunch depth and "Y2" as 0.0.

(17) Haunch Profile (Prestressed Concrete) – In contrast to haunch entry for steel, there is only one entry configuration for prestressed concrete superstructures. Typical average haunch

depths due to beam camber are 0.5” to 1.0”. Haunches at an outer beam should be entered as nearly as possible to the actual detail as shown on the bridge plans.

(18) Lateral Support (Steel) – For concrete decks lateral support should normally be specified for the entire length of the member. Virtis only allows for continuous top flange support and not at point locations. Therefore, the top flange of a floorbeam braced by deck stringers cannot be properly modeled for lateral bracing. In such cases continuous lateral support of the top flange will be specified. (This problem has been submitted to the Virtis program developer for resolution.)

(19) Interior Diaphragms (Prestressed Concrete Boxes) – The locations and weights of the beam diaphragms should be entered so their additional dead load will be accounted for. End diaphragms in box-beams need not be described since their dead load has virtually no affect on the load rating. Remember, only the portion filling the void should be used to calculate the diaphragm weight, not the entire beam cross section.

(20) Stiffener Ranges (Steel):

(a) Transverse Stiffener Ranges – Locations of transverse stiffeners on a steel beam, as previously named and described under Stiffener Definitions, are specified in this window. Entries are the stiffeners (Name), Support Number, Start Distance (measured from designated support), Spacing and Number of Spaces. Entry may be manual or by clicking the “Apply at Diaphragms…” and the “Stiffeners between Diaphragms…” buttons. The schematic profile view of the beam shows the locations of the stiffeners graphically and should be used as a check for the correctness of transverse stiffener data entry.

(b) Longitudinal Stiffener Ranges – Longitudinal stiffeners are defined as plates or angles and located using this window. Location is specified by entering the Support Number, Start Distance (measured from a support), Length (of the stiffener), Y, which is the vertical distance in inches or % web height from the top or bottom flange as indicated under the Measured From column. The steel material must also be entered. The schematic profile view of the beam depicts the stiffeners graphically.

(21) Bearing Stiffener Locations (Steel) – Previously described bearing stiffener plate or angles are located under this window. They are entered according to how many pairs are present and the Offset of each pair relative to the point of bearing.

(22) Shear Reinforcement Ranges (Prestressed Concrete):

(a) Vertical – Select the appropriate previously entered vertical shear reinforcement bars and describe their locations in each span along the beam line starting from the left end of the beam (not centerline bearing). Enter Start Distance, Number of Spaces and Spacing. Shear reinforcement bars should be en-

tered in the sequence in which they are located along the beam and not entered in groups according to bar designation. This is necessary to allow for accurate import from Virtis into a LARS model. The box under "Extends into Deck" must also be checked if it applies. Note: This latter entry determines whether or not the deck is composite with the beams.

(b) Horizontal – Ignore.

(23) Shear Reinforcement Ranges (Reinforced Concrete) – Select the appropriate previously entered vertical shear reinforcement bars and describe their locations along the beam line starting with the centerline of bearing at the leftmost support. Enter Start Distance, Number of Spaces and Spacing.

(24) Points of Interest (POI) – An explicitly defined POI only needs be designated at certain locations. These would be terminations of partial length top reinforcement bars over the interior supports in deck-slabs composite with the superstructure, just beyond the end of interior diaphragms in prestressed concrete box-beams near supports and at locations in concrete beams where the shear stirrup spacing increases. It should also be specified which side of the POI (left or right) is intended to be analyzed. It is not normally necessary to manually specify other structural transitions since they are automatically generated by the Virtis program. The exception to this is when the analysis shows an automatically generated POI to be critical or potentially critical for the overall load rating of the member. This is necessary so the POI location will be included when analyzed by LARS.

(25) Deterioration Profile (Steel) – This may be used to document and analyze deteriorated or damaged locations along a steel member. Deterioration is entered according to % section loss in the web, flanges and/or cover plates. A great deal of discretion must be exercised in utilizing this facility for the evaluation of shear in deteriorated webs. This is because the shear capacity of a beam web typically is controlled by crippling within a relatively large area in the plane of the web.

2. <u>Girder Line Superstructure</u>

a. 'Girder Line Superstructure Definition' Window

Record a logical descriptive name for the Superstructure Definition, e.g., 3-Span Continuous WF and select Default Units & Member Alt. Types. For Reference Line Length record the length of the superstructure between end bearings, most commonly along the Profile Grade line. This value is for information only. Make the appropriate Deck type and Live Load Lanes selections. LRFD Fatigue is normally ignored. Selections under the Analysis tab should be left at their default settings and the Engine tab should be ignored.

b. Impact / Dynamic Load Allowance – Default impact and dynamic load allowance factors may be modified.

c. Load Case Description – See II.G.1.c.

d. Superstructure Loads, Connectors (Steel), Shear Connector Definitions (Steel) – Ignore.

e. Stiffener Definitions (Steel) – See II.G.1.h

f. Stress Limits (Prestressed Concrete) – See II.G.1.i

g. Prestress Properties (Prestressed Concrete) – See II.G.1.j

h. Shear Reinforcement Definitions (Reinforced & Prestressed Concrete) – See II.G.1.k

i. Bar Mark Definitions (Reinforced Concrete) – See II.G.1.l

j. MEMBERS – Assign a Name to the member, preferably related to its beam number (from the plans) and its location, e.g., 3 - 2nd E Int, etc. For members critical to the load rating select both “Existing” and “Current” boxes, otherwise only check “Current”. Also, for critical members, suffix the member name with “-x” (for example, “3 - 2nd-x”). Enter values for Number of spans and Span lengths. The default selection for Member Location is “Interior”, which may be changed to “Exterior” if applicable. Girder spacing should be recorded, though it is for information only. Pedestrian load is normally left blank. Deck concrete crack control parameter (Z) (usually 130k/in) and Deck exposure factor (usually 0.75) should be entered.

   The Frame Member Simplified Definition box should be selected if the superstructure is framed into the pier(s). It opens selection boxes in the Member window to designate which supports are framed. Framing may be specified by separately calculating the rotational spring constant and entering it under the “Elastic” tab of the Supports window.

   i. Member Loads – See II.G.1.m.i

   ii. Supports – See II.G.1.m.ii

   iii. MEMBER ALTERNATIVES

      (1) MEMBER ALTERNATIVES Window – See II.G.1.m.iii.(1)

      (2) Default Materials – See II.G.1.m.iii.(2)

      (3) Impact / Dynamic Load Allowance – See II.G.1.m.iii.(3)

      (4) Live Load Distribution

         (a) Standard Tab – Compute the wheel Live Load Distribution Factors (LLDF) in accordance with the AASHTO Standard Specifications and enter them in the appropriate boxes depending on whether the “Use Simplified Method” or “Use Advanced Method” is selected. For the advanced method, LLDF are entered in separate displays according to Deflection, Moment or Shear selected in the “Action” drop-down box. Most commonly the simplified method is used.

(b) LRFD Tab – LLDF may be entered manually but the preferred method is normally to perform the Virtis computation by clicking on the button, "Compute from Typical Section…"

(5) Hinge Locations (Steel & Reinforced Concrete) – See II.G.1.m.iii.(5)

(6) Splice Locations (Steel) – See II.G.1.m.iii.(6)

(7) Shrinkage / Time (Prestressed Concrete) – See II.G.1.m.iii.(7)

(8) Girder Profile (Steel – Plate & Rolled) – See II.G.1.m.iii.(8)

(9) Cross-Sections (Steel – Built-up) – See II.G.1.m.iii.(9)

(10) Cross-Section Ranges (Steel – Built-up) – See II.G.1.m.iii.(10)

(11) Beam Details (Prestressed Concrete) – See II.G.1.m.iii.(11)

(12) Strand Layout (Prestressed Concrete) – See II.G.1.m.iii.(12)

(13) Girder Profile (Reinforced Concrete Tee) – See II.G.1.m.iii.(13)

(14) Girder Profile (Reinforced Concrete Slab):

(a) Section – Enter the representative width of the slab section to be used (usually 12"). Make a selection in the Concrete Material box and enter Modular Ratio (8.5 for f_c'=3.5ksi). Sacrificial wear thickness is normally left blank.

(b) Web – See II.G.1.m.iii.(13)(b)

(c) Reinforcement – See II.G.1.m.iii.(13)(c)

(15) Deck Profile (Steel):

(a) Deck Concrete – Enter the appropriate values for deck slab Material, Total Thickness and Tributary Widths, and (usually) Structural Thickness. Determine the Effective Flange Width (Std) and Effective Flange Width (LRFD) according to the applicable AASHTO design specifications.

(b) Reinforcement – See II. G.1.m.iii.(14)(b)

(c) Shear Connectors – See II.G.1.m.iii.(14)(c)

(16) Deck Profile (Prestressed Concrete):

(a) Deck Concrete – From the deck plans, enter the appropriate values for deck slab Material, Total Thickness and Tributary Widths, and (usually) Structural Thickness. Determine the Effective Flange Width (Std) based on the AASHTO Standard Specifications. The Effective Flange Width (LRFD) may be entered optionally at present.

(b) Reinforcement – See II.G.1.m.iii.(15)(b)

(17) Haunch Profile (Steel) – See II.G.1.m.iii.(16)

(18) Haunch Profile (Prestressed Concrete) – See II.G.1.m.iii.(17)

(19) Bracing Ranges:

(a) Diaphragms – Enter the locations of diaphragms or cross frames. Entry parameters provided are Start Distance, Spacing and Number of Spaces. In addition there is a field provided for entry of bracing weight (Load). This should always be used for concrete diaphragms and if used for steel diaphragms and cross-frames, the "Additional self load" entered in the Member Alternative Description window should be reduced appropriately.

(b) Lateral Support (Steel only) – See II.G.1.m.iii.(18)

(20) Interior Diaphragms (Prestressed Concrete Boxes) – See II.G.1.m.iii.(19)

(21) Stiffener Ranges (Steel) See II.G.1.m.iii.(20)

(22) Bearing Stiffener Locations (Steel) – See II.G.1.m.iii.(21)

(23) Shear Reinforcement Ranges (Prestressed Concrete) See II.G.1.m.iii.(22)

(24) Shear Reinforcement Ranges (Reinforced Concrete) – See II.G.1.m.iii.(23)

(25) Points of Interest (POI) – See II.G.1.m.iii.(24)

(26) Deterioration Profile (Steel) – See II.G.1.m.iii.(25)

3. **Floor System Superstructure** – Choose from one of three types, Girder-Floorbeam-Stringer, Girder-Floorbeam or Floorbeam-Stringer.

a. Girder/Truss-Floorbeam-Stringer (GFS/TFS)

i. SUPERSTRUCTURE DEFINITION Window – Note: Enter the values for these fields carefully. The Number of main members, spans and stringers fields cannot be changed after clicking the OK or Apply buttons.

(1) Under the Definition tab record a logically descriptive name for the Superstructure Definition, e.g.,2-Span Continuous GFS, 3-Span Cantilever TFS, etc., and record information under Description as desired. Make the appropriate Default Units, Main member configuration, Deck type & Member Alt. Types selections. Select the appropriate values for Number of main members, Main member number of spans and Number of stringers. Check or leave blank, as applicable, the check-boxes labeled Main members support the deck and Stringers frame into floorbeam boxes. Enter the appropriate values for Number of stringer units and the Span Lengths.

(2) Selections under the Analysis tab should be left at their default settings and the Engine tab should be ignored.

ii. Impact / Dynamic Load Allowance – See II.G.1.b.

iii. Load Case Description – See II.G.1.c.

iv. Framing Plan Detail

(1) Under the Layout tab, record the skew (LHA = +, RHA = -), Main Member Spacing (normally perpendicular to members) and Stringer Spacing.

(2) Under the Diaphragms tab, enter the diaphragm/cross frame spacing for each girder bay. Utilizing the Diaphragm Wizard may significantly reduce data entry effort. Diaphragm entry can be copied from one girder bay to another. Entry of diaphragm loads should be accounted for in the Additional self-load values entered under Girder Member Alternatives.

(3) When the focus is on Framing Plan Detail, the Framing Plan View can be called up using the "View schematic" icon on the toolbar or by selecting Schematic under the Bridge menu item. This provides a good graphical check for Framing Plan Detail entry.

v. Structural Typical Section

(1) Deck – Enter the dimensions for distances from the deck edges to the superstructure definition reference line (usually the PG line from the plans), and the distances to the first main member & stringer measured from their centerlines. Note that these dimensions are to the edge of deck and not necessarily to the outside of the parapets. The location of the reference line must also be selected as within or to the left or right of the deck.

(2) Deck (Cont'd) – For the deck concrete, enter the material, slab thickness, crack control parameter (typically 130 k/in) and the sustained modular ratio factor (typically 3.0).

(3) Parapet / Median / Railing / Generic / Sidewalk – See II.G.1.e.iii

(4) Lane Position – See II.G.1.e.iv

(5) Wearing Surface – See II.G.1.e.v

(6) Schematic View - See II.G.1.e.vi

vi. Superstructure Loads – This window is usually ignored. When dead load distribution must be modified for superimposed (Stage 2) dead loads it should be done by manually entering the appropriate values under Member Loads. This is accomplished by zeroing out the unit weight of the affected dead load element and manually entering the load for each Member assumed to carry the load. Also, when the main girders directly support the slab, the weight of deck edge appurtenances (parapet, rail, etc.) should not be distributed to interior stringers due to the relative stiffness of the main girders compared to the stringers.

vii. Connectors – Ignore unless bolts or rivets must be specified for riveted/bolted cover plates, etc.

viii. Shear Connector Definitions – Ignore.

ix. Stiffener Definitions – See II.G.1.h

x. Floorbeam Member Locations – This sets the framing for the floorbeams between the main girders. The Floorbeam Location Wizard significantly reduces data entry effort. The numbering for the floorbeams should match the convention used in the bridge plans, e.g., Flbm 12, Floorbeam 12, etc. The name of the floorbeam critical to the

load rating among all the floorbeams or the floorbeam used as representative should be suffixed with "-x".

xi. STRINGER GROUP DEFINITION GEOMETRY – Each stringer group is a simple-span or multi-span continuous unit, which is applied to the Floor System Geometry as a way of locating the stringer members in the structure. Information includes stringer span lengths and diaphragm locations.

Special Note: Formerly there was a limit of 12 continuous spans in a superstructure. Continuous stringer units with more than 12 spans modeled under that limitation should be re-modeled with the actual number of continuous spans present in the bridge.

xii. MEMBER DEFINITIONS

(1) FLOORBEAM DEFINITIONS –

(a) Floorbeam Definition

(i.) Description Tab – Material Type is set as steel. Select the applicable Girder Type from the pull-down list. Describe the floorbeam length and cantilever lengths as appropriate. Enter an appropriate value for additional self-load, e.g., suggested values – 20% for welded plate, 25-30% for riveted plate, 15% for WF beams, etc. Note: These suggested values should be reduced when diaphragm/cross-frame loads have been specified.

(ii.) Specs Tab – See to II.G.1.m.iii.(1).b

(iii.) Factors Tab – See to II.G.1.m.iii.(1).c

(iv.) Engine Tab – See to II.G.1.m.iii.(1).d

(v.) Control Options Tab – See to II.G.1.m.iii.(1).f

(b) Floorbeam Definition Loads – Usually may be ignored. Loads on floorbeams are from stringer reactions as applied in Floor System Geometry.

(c) Floorbeam Intermediate Supports – Enter, for example, when braces from the main girders or midspan supports at piers or abutments are present.

(d) Default Materials – Enter or modify as appropriate.

(e) Impact / Dynamic Load Allowance – Usually ignored.

(f) Splice Locations – Optional and normally ignored, will not affect load rating.

(g) Floorbeam Profile – Describe the floorbeam according to the Girder Type previously selected.

(h) Deck Profile/Haunch Profile – Usually ignored.

(i) Lateral Support – Refer to II.G.1.m.iii.(18).

(j) Stiffener Ranges – Enter the appropriate stiffeners at the actual locations along the floorbeam.

(k) Points of Interest – Refer to II.G.1.m.iii.(24).

(2) STRINGER DEFINITIONS –

(a) Stringer Definition

(i.) Description Tab – Material Type is set as steel. Select the applicable Girder Type from the pull-down list. Enter an appropriate value for additional self-load. Normally the Stringer Span Lengths will be defined by selecting the button, "Associate with stringer group definition." A separate Stringer Definition will have to be entered for each Stringer Group unit. Note: In order to edit a Stringer Group Definition, the Stringer Definition link will have to be broken by opening its window and selecting the button for "Enter stringer span lengths." The link must be re-established after the Group Definition has been edited.

(ii.) Specs Tab – See to II.G.1.m.iii.(1).b

(iii.) Factors Tab – See to II.G.1.m.iii.(1).c

(iv.) Engine Tab – See to II.G.1.m.iii.(1).d

(v.) Control Options Tab – See to II.G.1.m.iii.(1).f

(b) Stringer Definition Loads – Enter any loads not automatically generated according to the model geometry.

(c) Supports – Usually ignored. Modify if desired.

(d) Default Materials – Enter appropriate values.

(e) Impact / Dynamic Load Allowance – Usually ignored.

(f) Splice Locations – Optional and normally ignored, will not affect load rating.

(g) Stringer Profile – Describe the stringer according to the Girder Type previously selected.

(h) Deck Profile – Record the effective/structural thickness & widths of the deck for composite action with the stringers and the length(s) for which they are appropriate. Reinforcement should be ignored unless the stringer is composite in negative moment regions.

(i) Haunch Profile – Enter the dimensions of the haunch/fillet. Typically the height above the flange is 0.5" for stringers.

(j) Lateral Support – Lateral support should normally be entered as continuous along the entire top flange.

(k) Stiffener Ranges – If present, enter the appropriate stiffeners at the actual locations along the stringer.

(l) Bearing Stiffener Locations – If present, enter the bearing stiffeners.

(m) Points of Interest – See II.G.1.m.iii.(24).

xiii. GIRDER MEMBERS – See II.G.1.m

(1) Girder Member Loads – Enter loads not automatically calculated by Virtis and not transmitted to the main girders through the floor-beams.

(2) Supports – Model the support conditions in accordance with the plans. Note: Hinge/pin & link joints cannot be modeled in Virtis currently. These will have to be entered as a cantilever with a supports released in at least the Y and Z axes with a vertical load representing the dead load reaction of the adjacent suspended span.

(3) GIRDER MEMBER ALTERNATIVES window –

(a) Member Alternative Description

(i.) Description Tab – Record the Additional self load (typically 20-30% for main girders) and the End bearing locations.

(ii.) Specs Tab – See to II.G.1.m.iii.(1).b

(iii.) Factors Tab – See to II.G.1.m.iii.(1).c

(iv.) Engine Tab – See to II.G.1.m.iii.(1).d

(v.) Control Options Tab – See to II.G.1.m.iii.(1).f

(b) Default Materials – Enter appropriate values.

(c) Impact / Dynamic Load Allowance – Usually ignored.

(d) Live Load Distribution –

(i.) Standard Tab – Compute the wheel Live Load Distribution Factors (LLDF) in accordance with the AASHTO Standard Specifications and enter them in the appropriate boxes depending on whether the “Use Simplified Method” or “Use Advanced Method” is selected. For the advanced method, LLDF are entered in separate displays according to Deflection, Moment or Shear selected in the “Action” drop-down box. Most commonly the simplified method is used.

(ii.) LRFD Tab – LLDF may be entered manually but the preferred method is normally to perform the Virtis computation by clicking on the button, “Compute from Typical Section…”

(e) Click the “Compute from Typical Section” button but evaluate the results since Virtis compute wrong values for the Multi-lane Distribution Factor when the roadway width is between 18 ft. and 24 ft.

(f) Splice Locations – Optional and normally ignored, will not affect load rating.

(g) Girder Profile – Describe the main girder as a wide flange, welded plate or riveted built-up plate girder as applicable.

(h) Deck Profile – If applicable, record the effective/structural thickness & widths of the deck for composite action with the main girders and the length(s) for which they are appropriate. Reinforcement should be ignored unless the deck is composite in the negative moment regions.

(i) Haunch Profile – If applicable, enter the dimensions of the haunch/fillet on the girder. Typically the height above the flange is 1" for main girders.

(j) Lateral Support – Lateral support should normally be entered as continuous along the entire top flange even if the deck is not in contact with the top flange.

(k) Stiffener Ranges – If present, enter the appropriate stiffeners at the actual locations along the girder.

(l) Bearing Stiffener Locations – Enter the bearing stiffeners if applicable.

(m) Points of Interest – See II.G.1.m.iii.(24).

(n) Deterioration Profile – See II.G.1.m.iii.(25).

xiv. TRUSSES – Modeling of each truss line in the superstructure is provided by way of text coding. An identical truss line may be linked to one already coded. The truss is modeled according to the detailed description described in the Virtis Truss Command Language User Manual. Additional useful help for modeling trusses may be obtained from the document, Virtis Truss Method of Solution. These documents are available by pressing the F1 key while the program focus is upon an open Truss text input window.

There are a few guidelines to follow when modeling trusses for IDOT:

- Logical names for the truss elements (panel points, members and cross sections) should be used, based on plan designations, relative locations and/or member orientation.
- I-shaped Builtup Sections with laced webs but without top or bottom flange plates should be modeled with flange plates described as very small, e.g., .0001" X .0001". Similar methodology may be necessary in order to be able to create certain AngleBox Sections. *Note: This will be necessary until such a time as this cross-section configuration is recognized as a valid Builtup Section by Virtis.*
- NonDetailed type cross-sections should not be used unless absolutely necessary.

xv. Floor System Geometry – Enter the appropriate stringer groups with the first referenced from the left end and subsequent stringer groups from the end of the previous unit. If groups are mirrored, it is usually horizontally. The "Include in Analysis" boxes should not be checked.

(1) STRINGER UNIT LAYOUT – Here is where the stringer live load distribution factors are input, analysis is performed, and support reactions are computed and input.

(a) Computed Stringer Reactions – After the analysis of the stringers, the Computed Stringer Reactions are viewed, selected and applied to the model.

(b) STRINGER MEMBERS – In this window, name the member relative to its location in the framing plan, e.g., "2 – 1st N Int", etc. Make sure both the "Existing" and "Current" boxes are checked. Check the "Include in analysis" box if it is desired to see the rating results for this member when the entire bridge model is analyzed. Typically however, it is useful to activate for analysis only the one stringer that controls the rating for all the stringers of the floor system.

(i.) Computed Stringer Reactions – Similar to (1)(a) above, except the values are limited to the subject Stringer Member.

(ii.) STRINGER MEMBER ALTERNATIVES – Assign a descriptive name relative to the member cross-section, e.g., 24WF92-Comp., etc. Under the Live Load Distribution tab, enter the Wheel Distribution Factors, preferably using the "Compute from Typical Section" button. Fields under the remaining tabs are optional and may be entered or modified if appropriate and applicable. Run the analysis to produce the stringer reactions and make sure they are added in the Computed Stringer Reactions window(s).

(2) FLOORBEAM MEMBERS – Here will be listed each of the floorbeams for the Superstructure Definition named in accordance with the Floorbeam Member Locations. Each will have to be described by a link to the appropriate Floorbeam Definition. Name the member according to its designation in the framing plan, e.g., "Flbm 15", etc. Make sure both the "Existing" and "Current" boxes are checked. Check the "Include in analysis" box if it is desired to see the rating results for this member when the entire bridge model is analyzed. Typically, however, it is useful to activate for analysis only the one stringer controlling the rating for all the stringers of the floor system.

(a) Floorbeam Stringer Reactions – The Stage 1 and 2 dead load reactions of the stringers on the floorbeams are displayed as computed during the stringer analyses. An option is available to override a Computed Reaction with a User Defined Reaction. The "Advanced" button displays the reactions broken down by Dead load Case.

(b) FLOORBEAM MEMBER ALTERNATIVES – Each floorbeam must have a Member Alternative assigned. The required entries are the Name and selection of the appropriate Floorbeam Definition. The Name should be related to the position of the floorbeam in the overall framing plan, e.g., Sp. 3 2nd E (main girder span #3, 2nd floorbeam from the east span support).

b. Girder/Truss-Floorbeam

i. SUPERSTRUCTURE DEFINITION Window – Note: Enter the values for these fields carefully. The Number of main members and spans fields cannot be changed after the clicking the OK or Apply buttons.

(1) Under the Definition tab record a logically descriptive name for the Superstructure Definition, e.g., 2-Span Continuous GF and record information under Description as desired. Make the appropriate Default Units, Main member configuration, Deck type & Member Alt. Types selections. Select the appropriate values for Number of main members and enter Main member number of spans and Span Lengths.

(2) Selections under the Analysis tab should be left at their default settings and the Engine tab should be ignored.

ii. Impact / Dynamic Load Allowance – See II.G.3.a.ii.

iii. Load Case Description – See II.G.1.c.

iv. Framing Plan Detail – See II.G.3.a.iv.

v. Structural Typical Section – See II.G.3.a.v.

vi. Superstructure Loads – See II.G.3.a.vi.

vii. Connectors & Shear Connector Definitions – Ignore.

viii. Stiffener Definitions – See II.G.3.a.ix.

ix. Floorbeam Member Locations – See II.G.3.a.x.

x. MEMBER DEFINITIONS - FLOORBEAM DEFINITIONS – See II.G.3.a.xii(1).

xi. GIRDER MEMBERS – See II.G.3.a.xiii.

xii. TRUSSES – See II.G.3.a.xiv

xiii. FLOORBEAM MEMBERS – Here will be listed each of the floor-beams, preferably named according to its designation in the framing plan, e.g., “Flbm 15”, etc. Make sure both the “Existing” and “Current” boxes are checked. Check the “Include in analysis” box if it is desired to see the rating results for this member when the entire bridge model is analyzed. FLOORBEAM MEMBER ALTERNATIVES - Each floor-beam must be linked to the appropriate FLOORBEAM DEFINITION. The tabs may usually be ignored.

c. Floorbeam-Stringer

i. SUPERSTRUCTURE DEFINITION Window – Note: Enter the values for these fields carefully. The Number of stringers field cannot be changed after the clicking the OK or Apply buttons.

(1) Under the Definition tab record a logically descriptive name for the Superstructure Definition, e.g., 3-Span Continuous FS and record information under Description as desired. Make the appropriate Default Units, Main member configuration, Deck type & Member Alt. Types selections. Enter the appropriate values for Number of

support lines, Number of stringers, Number of stringer units and Span Lengths and check or leave blank the Stringers frame into floorbeam check-box.

(2) Selections under the Analysis tab should be left at their default settings and the Engine tab should be ignored.

ii. Impact / Dynamic Load Allowance – See II.G.1.b.

iii. Load Case Description – See II.G.1.c.

iv. Framing Plan Detail

(1) Record the skew (LHA = +, RHA = -).

(2) Record the Member Spacing Orientation, usually Perpendicular to member.

(3) Record the Stringer Spacing.

(4) With the Framing Plan Detail folder active, the Framing Plan View can be called up using the "View schematic" icon on the toolbar or by selecting Schematic under the Bridge menu item. This provides a good graphical check for Framing Plan Detail entry.

v. Structural Typical Section – See II.G.3.a.v.

vi. Superstructure Loads – See II.G.3.a.vi.

vii. Connectors & Shear Connector Definitions – Ignore.

viii. Stiffener Definitions – See II.G.1.h.

ix. Floorbeam Member Locations – See II.G.3.a.x.

x. STRINGER GROUP DEFINITION GEOMETRY – See II.G.3.a.xi.

xi. MEMBER DEFINITIONS

(1) FLOORBEAM DEFINITIONS – See II.G.3.a.xii(1).

(2) STRINGER DEFINITIONS – See II.G.3.a.xii(2).

xii. Floor System Geometry – See II.G.3.a.xv.

4. **Floor Line Superstructure** – Choose from one of three types, Girder-Floorbeam-Stringer, Girder-Floorbeam or Floorbeam-Stringer. (Refer to applicable portions of Girder Line Superstructure (II.G.2) and Floor System Superstructure (II.G.3) for guidance.)

III. Special Considerations:

A. Reinforced Concrete Superstructures

1. The Girder property input method under the Description tab of the Member Alternative should always be set to "Schedule based". *Note: Concrete structures rated prior to the introduction of the schedule based input in Virtis v. 5.2 should be converted to schedule based input.*

2. Under Bar Mark Definitions, reinforcement bars should be named according to their plan designation. Hooked bars at the beginning and end of the Member Alternative will have to be additionally designated as start/end or similar and defined so the hook is at the start or end of the bar. Lines of same size reinforcement extended by laps continuously from end to end of a member

should be designated as a single bar end to end of the superstructure. This will avoid the possibility that reinforcement bar area would be improperly increased at a potential rating control point.

3. Main reinforcement should be marked "Fully Developed" in the Girder Profile.
4. Use modular ratio (Es/Ec) rounded up to the nearest tenth. e.g., 8.5 for f'c=3.5ksi, 6.7 for f'c=5ksi, 6.4 for f'c=6ksi, etc.
5. Shear reinforcement in beams must be properly described in the model.
6. Metric Rebars – IDOT uses hard converted metric bars on its plans. Virtis only accepts soft converted sizes. Users should make the substitutions as follows (preferably using U.S. Customary units).

Metric Rebar Size Conversion		
Plans	Virtis	
	Metric	U.S. Cust.
10	13	4
15	16	5
20	22	7
25	25	8
30	32	10
35	36	11
45	57	18

7. Reinforced Concrete Slabs & Box Culvert Top Slabs w/No Fill
   a. When the slab rests directly on an abutment, the centerline of bearing, measured from the face of the abutment parallel to centerline of roadway, should be taken as the lesser of ½ slab thickness or centerline of support.
   b. Use a 12" wide interior strip to define the member.
   c. Ignore shear in the analysis of RC slabs with less than 2.0 feet of fill.
   d. Live load distribution is based on the average of span lengths for continuous RC-slab superstructures.
8. Reinforced Concrete Box Culverts & Other Buried Structures
   a. Load Factor Modifications – IDOT practice for LFD design of culverts under fill is to apply a total dead load factor ($\gamma + \beta$) = 1.5 to all dead loads (including earth fill) combined. Therefore, under the "Load Factors" tab of "Factors"/"LFD" enter the following: Gamma Factor – 1.0; D (Inv & Opr) – 1.5; Inventory $(L+I)_n$ – 2.167, Operating $(L+I)_n$ – 1.3. Also, under the Resistance Factors tab, enter the appropriate "Resistance Factors" (AKA, "strength-reduction factors, φ" from AASHTO 8.16.1.2.2.)
   b. Impact factors: 0.3 for fill ≤1.0'; 0.2 for fill > 1.0' and ≤2.0'; 0.1 for fill > 2.0' and < 3.0'; 0.0 for fill ≥ 3.0'.
   c. Fill + Pavement >0' and <2.0' – Compute Live Load Distribution (LLDF) same as a RC Slab w/contact loading.
   d. Fill + Pavement ≥2.0' and <8.0' – Note: Though Virtis is not directly capable of rating culverts with ≥2.0' of fill, by analyzing positive & negative

moments (M^+ & M^-) and shear (V) separately with modified LLDF, a suitable model for rating and permit evaluation can be created. Use the following methodology…

i. Set up the Virtis model according to the plans using a LLDF = 0.1 and run the analysis obtaining the preliminary maximum live load moments & applicable live load shear. The impact factor used should be in accordance with AASHTO relative to the fill height.

ii. Use the IDOT Bureau of Bridges *Culvert 99* culvert design program to determine actual maximum live load moments & applicable live load shear. (The resulting ratings for moment at the maximum moment points and for shear are the target ratings to obtain from Virtis.)

iii. Calculate the approximated fill-modified Virtis live load distribution factor ($LLDF^{Virtis}$) that will enable Virtis to generate LL moments & shears equal to Culvert 99. – Multiply the Virtis preliminary LLDF (0.1) by the ratio of Culvert 99 moments/shears to Preliminary Virtis moments/shears. [$0.1 * (M^{\pm}|V)^{Cul99} / (M^{\pm}|V)^{VirtisPre} = LLDF^{Virtis}$]

iv. Create separate Virtis Members for M^+, M^- & V using the appropriate LLDF's. For each of these, the POI Control must be set to "Generate at user-defined points" with POI's established at the respective maximum moment locations, reinforcement terminations and appropriate locations for shear evaluation. Special Note: It may be necessary to increase reinforcement in the top or bottom of slab, respectively for the M^+ & M^- members to ensure the appropriate moment controls the rating of the member.

e. Skewed Culverts with Slab Reinforcement Placed Parallel to the Skew Line – Model using spans perpendicular to the support walls. Reinforcement spacing should be modified for both top and bottom reinforcement using yield-line theory as follows:

- Multiply the spacing specified in the plans by sec^2 of the skew angle.
- Determine φM_n^{par} from Culvert99 with Main Reinforcement Placement specified as "Parallel to Headwall".
- Determine φM_n^{perp} from Culvert99 with Main Reinforcement Placement specified as "Perpendicular to CL Culvert" using the increased reinforcement spacing determined in the first step.
- Multiply the increased spacing from the first step by φM_n^{perp} / φM_n^{par} and use the product as the reinforcement spacing in the Virtis model.

9. Precast Concrete Channel Beams

a. Model the geometry as RC Tee-Beam combining the two the stems as one and the top flange/beam spacing equal to the width of the beams.

b. Compute the LLDF based on the AASHTO Standard Specifications for adjacent precast concrete channel beams with a "K" constant of 2.2.

B. Prestressed Concrete

1. As with RC beam bridges, shear should be included in the analysis to obtain the ISIS Inventory and Operating Ratings.
2. When creating new agency defined beams in the Virtis Library, use the beam properties found in the Prestressed Concrete Manual instead of allowing Virtis to calculate them.
3. I-Beams & Bulb-Tees
   a. Positive Moment at Piers: This should be ignored for existing superstructures by checking the appropriate box (see Member Alternative/Beam Details/Continuity Diaphragm tab). It should only be utilized in the analysis of proposed new prestressed beam superstructures. If it is desired to include this for structures where prestress strands have been utilized as reinforcement at the bottom of the diaphragm, the strands should be converted to an equivalent number and size of reinforcement bars.
   b. Beams with ¾" diameter, Grade 55, threaded rods at the ends of beams will require special entry of shear reinforcement. These ¾" diameter threaded rods should be entered as Grade 60 #5 bars, which are virtually equivalent. It is suggested they be named "3/4" Thr Rod".
   c. Reinforcement bars specified over interior supports should have a POI specified about 0.1 foot beyond each end of the bar.
   d. The "Distance" field for both the top and bottom reinforcement identified in the Deck Profile is best linked to the bottom of the slab, not the top. This is because future deck scarification for concrete wearing surface would cause the measurement from the top to change. If the Distance coded is relative to the bottom of slab, when a concrete wearing surface is added to the deck, its value will not have to be modified.
   e. Harped Strands – If strands are harped in the beams, they should be so specified in the Member Alternative, even though it will have no affect on the bridge rating.
   f. In the Stress Limit Sets table for the prestressed beam concrete, Virtis uses $3*\sqrt{f'_{ci}}$ as its default for Initial Allowable Tension. Although this varies from the $7.5*\sqrt{f'_{ci}}$ specified in the IDOT *Prestressed Concrete Manual*, it may be ignored since initial stresses are not relevant to the rating analysis.
4. Box/Deck-beams
   a. Use the Virtis computation for the LLDF.
   b. Wire fabric shear reinforcement: Virtis does not provide an option for the use of 8 x 3-W2.5 x W5.5 wire fabric as shear reinforcement. For purposes of rating deck beams with circular voids, provide the equivalent vertical area of steel by using #3 bars with 2 legs spaced at 6" (Fy = 60ksi).