Manual of Test Procedures for Materials

State of Illinois
Illinois Department of Transportation

Illinois Department of Transportation

2014-0145, 0450-15, 11/14, web

Manual of Test Procedures for Materials

Prepared and Published by
Illinois Department of Transportation
Bureau of Materials and Physical Research

Springfield, Illinois

Effective June 1, 2012
Revised February 1, 2014

Revision History and Document Control for February 1, 2014 Edition of *Manual of Test Procedures for Materials*
Prior Edition: June 1, 2012, Revised March 1, 2013

The Manual of Test Procedures for Materials will be reviewed by the Engineer of Concrete and Soils for adequacy annually and updated annually to reflect current test methods. Hard copies are controlled. The newest revision and archives are available from Policy Distribution.

Revisions to the documents listed below are denoted within by a vertical line in the left margin. Effective dates are as indicated on the individual documents and within the tables of contents.

Standard	***Description of Revisions***
Illinois Specification 201	Added Large Sized Aggregate Gradation Table.
Illinois Test Procedure 2	Revised Section 5.3.
Illinois Test Procedure 11	Revised various sections.
Illinois Test Procedure 19	Revised various sections.
Illinois Test Procedure 301	Revised various sections.
Illinois Test Procedure 302	Revised various sections.
Illinois Test Procedure 303	Revised Reference Test Procedures Section and Section 4.
Illinois Test Procedure 306	Revised Reference Test Procedures Section and Section 3.
ASTM C 1064/C 1064M	ASTM C 1064/C 1064M replaced AASHTO T 309. Included Standard Test Method for Temperature of Freshly Mixed Hydraulic Cement Concrete.
ASTM C 1231/C 1231M	Updated to new version.
ASTM E 29	Updated to new version.
AASHTO T 23	Revised Illinois Modified Sections 2.2, 5.4, 5.11, and 8.3. Updated to new version.
AASHTO T 30	Revised Illinois Modified Section 2.1.
AASHTO T 99	Revised Illinois Modified Sections 2.1 and 2.2.
AASHTO T 119	Revised Illinois Modified Section 2.1. Updated to new version.
AASHTO T 121	Revised Illinois Modified Section 2.1.
AASHTO T 134	Revised Illinois Modified Section 2.1.
AASHTO T 152	Updated to new version.
AASHTO T 164	Revised Illinois Modified Section 2.1.
AASHTO T 180	Revised Illinois Modified Section 2.1.
AASHTO T 191	Revised various Illinois Modified sections and added new Illinois Modified Section 4.2.4. Updated to new version.
AASHTO T 196	Revised Illinois Modified Section 2.1.
AASHTO T 209	Revised Illinois Modified Sections 9.4 and 9.5.1.
AASHTO T 217	Revised Illinois Modified Section 2.2.
AASHTO T 224	Revised Illinois Modified Section 2.1.
AASHTO T 231	Updated to new version.
AASHTO T 272	Revised Illinois Modified Section 2.1.

(continued)

Revision History and Document Control for February 1, 2014 Edition of *Manual of Test Procedures for Materials*
Prior Edition: June 1, 2012, Revised March 1, 2013

The Manual of Test Procedures for Materials will be reviewed by the Engineer of Concrete and Soils for adequacy annually and updated annually to reflect current test methods. Hard copies are controlled. The newest revision and archives are available from Policy Distribution.

Revisions to the documents listed below are denoted within by a vertical line in the left margin. Effective dates are as indicated on the individual documents and within the tables of contents.

Standard	***Description of Revisions***
AASHTO T 287	Revised Illinois Modified Sections 2.1, A4.2.1 and A7.2.
AASHTO T 308	Revised Illinois Modified Section 2.1.
AASHTO T 309	Removed AASHTO T 309 and replaced with ASTM C 1064/C 1064M.
AASHTO T 310	Revised various Illinois Modified sections and added new Illinois Modified sections. Updated to new version,
AASHTO T 312	Revised various Illinois Modified sections and added new Illinois Modified sections. Updated to new version,
AASHTO T 318	Revised Illinois Modified Section 2.1 and updated to new version.
AASHTO T 324	Revised Illinois Modified Sections 4.2, 6.2.6.2 and 6.3.2.2.
AASHTO M 323	Revised Illinois Modified Sections All Sections, 2.1, 5.3 and 7.2.2.
AASHTO M 325	Revised Illinois Modified Section 2.1.
AASHTO R 35	Revised Illinois Modified Section All Sections.
AASHTO R 39	Revised Illinois Modified Section 2.1.
AASHTO R 46	Revised Illinois Modified Section 2.1.
AASHTO R 60	Revised Illinois Modified Section 5.2, 5.2.1, 5.2.2, 5.2.3 and 5.2.4.
Illinois Test Procedure SCC-8	Revised various sections.
Illinois Test Procedures SCC-9 and SCC-10	Revised page numbers. No changes made to content.
Appendix A3	Revised Sections 9.2, 9.3, 9.3.2, and 9.4.4.
Appendix B4	Revised all sections.
Appendix B16	Revised various sections.
Appendix B22	Revised various sections.
Appendix C2	Revised various sections.
Appendix C3	Revised Making Strength Specimens (Cylinders or Beams) Section.
Appendix C4	Revised Point of Random Sampling and Testing Based on Production.
Appendix C5	Added location of new form.
Appendix D5	Revised Minimum Requirements for Electronic Balances for Portland Cement Concrete.
Appendix E6	Revised various sections.
Appendix E7	Revised page numbers. No changes made to content.

Illinois Department of Transportation
Departmental Policies

MAT-13

Effective Date: July 3, 2013
Scheduled Review Date: July 3, 2016

MANUAL OF TEST PROCEDURES FOR MATERIALS

1. POLICY

It is the policy of the Department of Transportation to publish and maintain a manual that provides test procedures for quality control, quality assurance, and acceptance testing of aggregates, hot mix asphalt and Portland cement concrete and soils. Illinois test procedures for other materials may be included.

2. PERSONS AFFECTED

Division of Highways (DOH)

3. PURPOSE

The purpose of this policy is to provide for the publication of a manual to ensure consistent test procedures in the production and acceptance of materials.

4. GUIDELINES FOR IMPLEMENTATION

A. The manual will provide test procedures currently used by the transportation industry. The Engineer may request the manual supersede the "in effect on the date of invitation for bids" clause in Article 106.03 of the Illinois Department of Transportation's Standard Specifications for Road and Bridge Construction. If this occurs, Article 109.04 will apply if applicable.

B. The test procedures are applicable to quality control, quality assurance, and acceptance testing required by construction contracts. The procedures are applicable to testing performed by the contractor, the department, or consultants retained by either.

C. Department training classes shall utilize the current edition of this manual for all applicable test procedures.

D. Where specified, testing shall be performed by trained technicians and conducted in approved laboratories.

5. RESPONSIBILITIES

A. The **Bureau of Materials and Physical Research** (BMPR) is responsible for the issuance and maintenance of this policy.

B. The **DOH' regions/districts** are responsible for ensuring compliance with this policy.

C. The **Engineer of Tests** of the BMPR Materials Testing Section should be contacted when questions arise regarding the application of these procedures.

6. REVISION HISTORY

Changes to this policy included in this version include:

- Minor editorial changes and updates, and
- Approval signature removed from policy.

Archived versions of this policy may be obtained by contacting BMPR.

CLOSING NOTICE

Manual: Manual of Test Procedures for Materials

Supersedes: Departmental Policy MAT-13: Manual of Test Procedures for Materials, Effective: April 1, 2011

Signature: On file

SEQUENTIAL TABLE OF CONTENTS
(continued)
MANUAL OF TEST PROCEDURES
FOR MATERIALS

Standard	*Description*	*Page*
Illinois Specification 201 (Effective 02/01/14)	Aggregate Gradation Sample Size Table	1
Illinois Test Procedure 2 (formerly AASHTO T 2) (Effective 02/01/14)	Sampling of Aggregates	5
Illinois Test Procedure 11 (formerly AASHTO T 11) (Effective 02/01/14)	Materials Finer Than 75-µm (No. 200) Sieve in Mineral Aggregates by Washing	11
Illinois Test Procedure 19 (formerly AASHTO T 19) (Effective 02/01/14)	Unit Weight and Voids in Aggregate	17
Illinois Test Procedure 27 (formerly AASHTO T 27) (Effective 03/01/13)	Sieve Analysis of Fine and Coarse Aggregates	29
Illinois Test Procedure 84 (formerly AASHTO T 84) (Effective 03/01/13)	Specific Gravity and Absorption of Fine Aggregate	37
Illinois Test Procedure 85 (formerly AASHTO T 85) (Effective 03/01/13)	Specific Gravity and Absorption of Coarse Aggregate	45
Illinois Test Procedure 202 (Effective 05/01/07)	Leachate Determination in Crushed Slag Samples	51
Illinois Test Procedure 248 (formerly AASHTO T 248) (Effective 06/01/12)	Reducing Samples of Aggregate to Testing Size	53
Illinois Test Procedure 255 (formerly AASHTO T 255) (Effective 03/01/13)	Total Evaporable Moisture Content of Aggregate by Drying	61
Illinois Test Procedure 301 (Effective 02/01/14)	Fine Aggregate Moisture Content by Flask Method	65
Illinois Test Procedure 302 (Effective 02/01/14)	Aggregate Specific Gravity and Moisture Content by Dunagan Method	71
Illinois Test Procedure 303 (Effective 02/01/14)	Fine or Coarse Aggregate Moisture Content by Pycnometer Jar Method	79

SEQUENTIAL TABLE OF CONTENTS
(continued)
MANUAL OF TEST PROCEDURES FOR MATERIALS

Standard	*Description*	*Page*
Illinois Test Procedure 304 (Effective 03/01/13)	Pull-off Test (Surface Method)	83
Illinois Test Procedure 305 (Effective 03/01/13)	Pull-off Test (Overlay Method)	87
Illinois Test Procedure 306 (Effective 02/01/14)	Voids Test of Coarse Aggregate for Concrete Mixtures	91
Illinois Test Procedure 307 (Effective 03/01/13)	Sampling and Testing of Controlled Low-Strength Material (CLSM)	95
Illinois Test Procedure 501 (formerly 401) (Effective 04/01/10)	Dynamic Cone Penetration (DCP)	97
Illinois Test Procedure 502 (formerly 402) (Effective 04/01/10)	Static Cone Penetration (SCP)	103
Illinois Test Procedure 4791 (formerly ASTM D 4791) (Effective 06/01/12)	Flat Particles, Elongated Particles, or Flat and Elongated Particles in Coarse Aggregate	107
Illinois Test Procedure 5821 (formerly ASTM D 5821) (Effective 06/01/12)	Determining the Percentage of Fractured Particles in Coarse and Fine Aggregate	117
ASTM C 1064/C 1064M-12 (Illinois Modified 02/01/14)	Temperature of Freshly Mixed Portland Cement Concrete	125
ASTM C 1074-11 (Illinois Modified 06/01/12)	Estimating Concrete Strength by the Maturity Method	127
ASTM C 1231/C 1231M-12 (Illinois Modified 02/01/14)	Use of Unbonded Caps in Determination of Compressive Strength of Hardened Concrete Cylinders	129
ASTM D 1188-07 (Illinois Modified 04/01/11)	Standard Test Method for Bulk Specific Gravity and Density of Compacted Bituminous Mixtures Using Coated Samples	131
ASTM D 2950-91 (Illinois Modified 04/01/10)	Determination of Density of Bituminous Concrete in Place by Nuclear Methods (Density Modified)	133
ASTM D 4791	See Illinois Test Procedure 4791	

SEQUENTIAL TABLE OF CONTENTS
(continued)
MANUAL OF TEST PROCEDURES
FOR MATERIALS

Standard	*Description*	*Page*
ASTM D 5821	See Illinois Test Procedure 5281	
ASTM E 29-13 (Illinois Modified 02/01/14)	Using Significant Digits in Test Data to Determine Conformance with Specifications	139
AASHTO T 2	See Illinois Test Procedure 2	
AASHTO T 11	See Illinois Test Procedure 11	
AASHTO T 19M/T 19	See Illinois Test Procedure 19	
AASHTO T 22-10 (2011) (Illinois Modified 03/01/13)	Compressive Strength of Cylindrical Concrete Specimens	141
AASHTO T 23-13 (Illinois Modified 02/01/14)	Making and Curing Concrete Test Specimens in the Field	143
AASHTO T 27	See Illinois Test Procedure 27	
AASHTO T 30-10 (Illinois Modified 02/01/14)	Mechanical Analysis of Extracted Aggregate	147
AASHTO T 84	See Illinois Test Procedure 84	
AASHTO T 85	See Illinois Test Procedure 85	
AASHTO T 99-10 (Illinois Modified 02/01/14)	Moisture - Density Relations of Soils Using a 2.5-kg (5.5-lb) Rammer and a 305-mm (12-in.) Drop	149
AASHTO T 119M/T 119-13 (Illinois Modified 02/01/14)	Slump of Hydraulic Cement Concrete	151
AASHTO T 121M/T 121-12 (Illinois Modified 02/01/14)	Weight per Cubic Foot, Yield, and Air Content (Gravimetric) of Concrete	153
AASHTO T 134-05 (2009) (Illinois Modified 02/01/14)	Moisture-Density Relations of Soil-Cement Mixtures	155
AASHTO T 141	**See AASHTO R 60 (Illinois Modified)**	**157**

SEQUENTIAL TABLE OF CONTENTS
(continued)
MANUAL OF TEST PROCEDURES FOR MATERIALS

Standard	*Description*	*Page*
AASHTO T 152-13 (Illinois Modified 02/01/14)	Air Content of Freshly Mixed Concrete by the Pressure Method	159
AASHTO T 164-11 (Illinois Modified 02/01/14)	Quantitative Extraction of Bitumen from Bituminous Paving Mixtures	163
AASHTO T 166-10 (Illinois Modified 04/01/11)	Bulk Specific Gravity of Compacted Bituminous Mixtures Using Saturated Surface-Dry Specimens	167
AASHTO T 177-10 (Illinois Modified 06/01/12)	Flexural Strength of Concrete (Using Simple Beam with Center Point Loading)	169
AASHTO T 180-10 (Illinois Modified 02/01/14)	Moisture-Density Relations of Soils Using a 4.54-kg (10-lb) Rammer and a 457-mm (18-in.) Drop	171
AASHTO T 191-13 (Illinois Modified 02/01/14)	Density of Soil In-Place by the Sand-Cone Method	173
AASHTO T 196M/T 196-11 (Illinois Modified 02/01/14)	Air Content of Freshly Mixed Concrete by the Volumetric Method	175
AASHTO T 209-05 (Illinois Modified 02/01/14)	Maximum Specific Gravity of Bituminous Paving Mixtures	177
AASHTO T 217-13 (Illinois Modified 02/01/14)	Determination of Moisture in Soils by Means of a Calcium Carbide Gas Pressure Moisture Tester	181
AASHTO T 224-10 (Illinois Modified 02/01/14)	Correction of Coarse Particles in the Soil Compaction Test	183
AASHTO T 231-13 (Illinois Modified 02/01/14)	Capping Cylindrical Concrete Specimens	185
AASHTO T 245-97 (2008) (Illinois Modified 06/01/12)	Resistance to Plastic Flow of Bituminous Mixtures Using Marshall Apparatus	187
AASHTO T 248	See Illinois Test Procedure 248	
AASHTO T 255	See Illinois Test Procedure 255	
AASHTO T 265-12 (Illinois Modified 03/01/13)	Laboratory Determination of Moisture Content of Soils	189
AASHTO T 272-10 (Illinois Modified 02/01/14)	Family of Curves – One-Point Method	191

SEQUENTIAL TABLE OF CONTENTS
(continued)
MANUAL OF TEST PROCEDURES FOR MATERIALS

Standard	*Description*	*Page*
AASHTO T 283-07 (Illinois Modified 06/01/12)	Resistance of Compacted Bituminous Mixture to Moisture Induced Damage	193
AASHTO T 287-06 (2010) (Illinois Modified 02/01/14)	Asphalt Binder Content of Asphalt Mixtures by the Nuclear Method (Bituminous Concrete QC/QA document)	199
AASHTO T 305-09	Determination of Draindown Characteristics in Uncompacted Asphalt Mixtures	205
AASHTO T 308-09 (Illinois Modified 02/01/14)	Determining the Asphalt Binder Content of Hot-Mix Asphalt (HMA) by the Ignition Method	207
AASHTO T 309M/T 309	**See ASTM C 1064/C 1064 M (Illinois Modified)**	**211**
AASHTO T 310-13 (Illinois Modified 02/01/14)	In-Place Density and Moisture Content of Soil and Soil-Aggregate by Nuclear Methods (Shallow Depth)	213
AASHTO T 312-12 (Illinois Modified 02/01/14)	Preparing and Determining the Density of Hot-Mix Asphalt (HMA) Specimens by Means of the Superpave Gyratory Compactor	217
AASHTO T 318-02 (2011) (Illinois Modified 02/01/14)	Water Content of Freshly Mixed Concrete Using Microwave Oven Drying	223
AASHTO T 324-11 (Illinois Modified 02/01/14)	Hamburg Wheel-Track Testing of Compacted Hot Mix Asphalt (HMA)	229
AASHTO T 325-04 (2011) (Effective 03/01/13)	Estimating the Strength of Concrete in Transportation Construction by Maturity Tests	233
AASHTO M 323-04 (formerly MP 2-99) (Illinois Modified 02/01/14)	Superpave Volumetric Mix Design	235
AASHTO M 325-08 (formerly MP 8-01) (Illinois Modified 02/01/14)	Stone Matrix Asphalt (SMA)	239
AASHTO R 30-02 (2010) (formerly PP 2-99) (Illinois Modified 06/01/12)	Mixture Conditioning of Hot-Mix Asphalt (HMA)	243
AASHTO R 35-04 (formerly PP 28-99) (Illinois Modified 02/01/14)	Superpave Volumetric Design for Hot-Mix Asphalt (HMA)	247

SEQUENTIAL TABLE OF CONTENTS
(continued)
MANUAL OF TEST PROCEDURES
FOR MATERIALS

Standard	*Description*	*Page*
AASHTO R 39-07 (2012) (formerly T 126) (Illinois Modified 02/01/14)	Making and Curing Concrete Test Specimens in the Laboratory	251
AASHTO R 46-08 (formerly PP 41-01) (Illinois Modified 02/01/14)	Designing Stone Matrix Asphalt (SMA)	253
AASHTO R 60-12 (formerly T 141) (Illinois Modified 02/01/14)	Sampling Freshly Mixed Concrete	255
Self-Consolidating Concrete Provisional Test Methods		
Illinois Test Procedure SCC-1 (Effective 03/01/13)	Sampling, Determining Yield and Air Content, and Making and Curing Strength Test Specimens of Self-Consolidating Concrete	257
Illinois Test Procedure SCC-2 (Effective 04/01/08)	Slump Flow and Stability of Self-Consolidating Concrete	259
Illinois Test Procedure SCC-3 (Effective 05/01/07)	Passing Ability of Self-Consolidating Concrete by J-Ring and Slump Cone	265
Illinois Test Procedure SCC-4 (Effective 03/01/05)	Passing Ability of Self-Consolidating Concrete by L-Box	267
Illinois Test Procedure SCC-6 (Effective 04/01/11)	Static Segregation of Hardened Self-Consolidating Concrete Cylinders	269
Illinois Test Procedure SCC-8 (Effective 01/01/08) (Revised 02/01/14)	Assessment of Dynamic Segregation of Self-Consolidating Concrete During Placement	273
Illinois Provisional Test Procedure SCC-9 (Effective 04/01/11)	Dynamic Segregation of Fresh Self-Consolidating Concrete by Flow Trough	275
Illinois Test Procedure SCC-10 (Effective 03/01/13)	Determining Formwork Pressure of Fresh Self-Consolidating Concrete Using Pressure Transducers	277

SEQUENTIAL TABLE OF CONTENTS
(continued)
MANUAL OF TEST PROCEDURES FOR MATERIALS

Standard	*Description*	*Page*
APPENDICES:	**IDOT POLICIES, PROCEDURES, AND SPECIFICATIONS FOR QUALITY CONTROL/QUALITY ASSURANCE (QC/QA) AND LABORATORIES AND EQUIPMENT**	
A—Aggregate		
Appendix A1 (Effective 01/01/94) (Revised 06/01/12)	Development of Gradation Bands on Incoming Aggregate at Mix Plants (prior HMA QC/QA stand-alone document)	A1
Refer to IDOT Website (Effective 01/01/08) (Revised 01/01/13)	Policy Memorandum 11-08.3, Aggregate Gradation Control System (AGCS) (formerly Appendix A2)	
Appendix A2 (Effective 11/01/95) (Revised 06/01/12)	Quality Control (QC) Manager / Aggregate Technician / AGCS Technician / Mixture Aggregate Technician / IDOT Inspector / Gradation Technician Responsibilities (Chapter 7, Aggregate Technician Course Manual) (formerly Appendix A3)	A3
Appendix A3 (Effective 11/01/95) (Revised 03/01/13)	Aggregate Producer Control Chart Procedure (Chapter 9, Aggregate Technician Course Manual) (formerly Appendix A4)	A9
Refer to IDOT Website (Effective 01/01/08) (Revised 06/01/12)	Stockpiling and Handling of Aggregate (Section 40.2, *Manual for Aggregate Inspection)* (formerly Appendix A6)	
Appendix A4 (Effective 03/04/80) (Revised 11/25/96)	Stockpiling and Handling of Aggregate (Section 40.2, *Manual for Aggregate Inspection)* (formerly Appendix A6)	A15
Appendix A5 (Effective 11/10/97) (Revised 06/01/12)	Guideline for Sample Comparison (formerly Appendix A7)	A17
Refer to IDOT Website (Effective 01/01/08) (Revised 06/01/12)	Policy Memorandum 9-08.1, Crushed Slag Producer Certification and Self-Testing Program (formerly Appendix A8)	

SEQUENTIAL TABLE OF CONTENTS
(continued)
MANUAL OF TEST PROCEDURES FOR MATERIALS

Standard	*Description*	*Page*
Refer to IDOT Website (Effective 01/01/08) (Revised 06/01/12)	Policy Memorandum 7-08.1, Recycling Portland Cement Concrete into Aggregate (formerly Appendix A9)	
Refer to IDOT Website (Effective 01/01/08) (Revised 06/01/12)	Policy Memorandum 13-08.1, Slag Producer Self-Testing Procedure (formerly Appendix A10)	
Refer to IDOT Website (Effective 01/01/08) (Revised 06/01/12)	Policy Memorandum 12-08.1, Crushed Gravel Producer Self-Testing Program (formerly Appendix A11)	
Refer to IDOT Website (Effective 01/01/08) (Revised 06/01/12)	Policy Memorandum 14-08.1, Inspection of Stone for Erosion Protection, Sediment Control, and Rockfill (formerly Appendix A12)	
Refer to IDOT Website (Effective 01/01/06)	Policy Memorandum 06-01, Designation of Aggregate Information of Shipping Tickets (formerly Appendix A13)	
B—Hot Mix Asphalt (HMA)		
Appendix B1 (Effective 05/01/93) (Revised 01/01/08)	Model Annual Quality Control (QC) Plan for Hot-Mix Asphalt (HMA) Production	B1
Appendix B2 (Effective 07/01/95) (Revised 05/01/07)	Model Quality Control (QC) Addendum for Hot-Mix Asphalt (HMA) Production	B11
Appendix B3 (Effective 05/01/01) (Revised 04/01/11)	Standard Test Method for Correlating Nuclear Gauge Densities with Core Densities	B13
Appendix B4 (Effective 05/01/93) (Revised 01/01/14)	Hot-Mix Asphalt Concrete QC/QA Start-Up Procedures	B21
Appendix B5 (Effective 05/01/93) (Revised 05/01/07)	Hot-Mix Asphalt QC/QA QC Personnel Responsibilities and Duties Checklist.....	B25

SEQUENTIAL TABLE OF CONTENTS
(continued)
MANUAL OF TEST PROCEDURES
FOR MATERIALS

Standard	*Description*	*Page*
Appendix B6 (Effective 05/01/93) (Revised 05/01/07)	Hot-Mix Asphalt QC/QA Initial Daily Plant and Random Samples	B35
Appendix B7 (Effective 05/01/93) (Revised 04/01/11)	Determination of Random Density Locations	B39
Appendix B8 (Effective 05/01/93) (Revised 01/01/08)	Control Charts / Rounding Test Values	B41
Appendix B9 (Effective 01/01/02) (Revised 01/01/13)	Hot-Mix Asphalt Mixture Design Verification Procedure	B45
Appendix B10 (Effective 01/01/98) (Revised 05/01/07)	Illinois Test Procedure 401, Storage of Hot-Mix Asphalt Mixtures	B51
Appendix B11 (Effective 01/01/02) (Revised 05/01/07)	Calibration of Equipment for Asphalt Binder Determination (Nuclear Gauge and Ignition Oven)	B53
Appendix B12 (Effective 01/01/98) (Revised 05/01/07)	Hot-Mix Asphalt Mix Design Procedure for Dust Correction Factor Determination	B57
Appendix B13 (Effective 01/01/02) (Revised 05/01/07)	Illinois Test Procedure 403, Calibration of the Ignition Oven for the Purpose of Characterizing Reclaimed Asphalt Pavements (RAP)	B65
Appendix B14 (Effective 01/01/02) (Revised 05/01/07)	Truck Sample Splitting Diagram	B69
Appendix B15 (Effective 05/01/04) (Revised 05/01/07)	Hot-Mix Asphalt (HMA) Production Gradation Windage Procedure for Minus #200 (minus 75 µm) Material	B71
Appendix B16 (Effective 11/20/03) (Revised 01/01/14)	Stripping of Hot-Mix Asphalt Mixtures Visual Identification and Classification	B73

SEQUENTIAL TABLE OF CONTENTS
(continued)
MANUAL OF TEST PROCEDURES FOR MATERIALS

Standard	*Description*	*Page*
Appendix B17 (Effective 03/07/05) (Revised 01/01/13)	Procedure for Introducing Additives to Hot Mix Asphalt Mixtures and Testing in the Lab.....	B77
Appendix B18 (Effective 05/01/05) (Revised 05/01/07)	Ignition Oven Aggregate Mass Loss Procedure	B91
Appendix B19 (Effective 05/01/05) (Revised 05/01/07)	Quick Reference Guides and Procedure for Internal Angle Calibration of Superpave Gyratory Compactors (SGC) Using the Dynamic Angle Validator (DAV-2).....	B93
Appendix B20 (Effective 05/01/07)	Segregation Control of Hot-Mix Asphalt	B99
Appendix B21 (Effective 05/01/07) (Revised 04/01/11)	Determination of Reclaimed Asphalt Pavement (RAP) Aggregate Bulk (Dry) Specific Gravity (Gsb).	B101
Appendix B22 (Effective 01/31/08) (Revised 01/01/14)	Use of Correction Factors for Adjusting the Gradation of Cores to Estimate the Gradation of the In-Place Pavement.....	B105
Appendix B23 (Effective 04/01/10)	Off-Site Preliminary Test Strip and Modified Start-Up Procedures.....	B107
Appendix B24 (Effective 03/01/13)	Determination of Residual Asphalt in Prime and Tack Coat Materials	B111

C—Portland Cement Concrete (PCC)

Appendix C1 (Effective 12/01/93) (Revised 06/01/12)	Model Quality Control Plan for Concrete Production.....	C1
Appendix C2 (Effective 12/01/93) (Revised 01/01/14)	Qualifications and Duties of Concrete Quality Control Personnel	C13

SEQUENTIAL TABLE OF CONTENTS
(continued)
MANUAL OF TEST PROCEDURES FOR MATERIALS

Standard	*Description*	*Page*
Appendix C3 (Effective 12/01/93) (Revised 01/01/14)	Required Sampling and Testing Equipment for Concrete	C19
Appendix C4 (Effective 12/01/93) (Revised 01/01/14)	Method for Obtaining Random Samples of Concrete	C25
Appendix C5 (Effective 04/01/10) (Revised 01/01/14)	IDOT Concrete Quality Control and Quality Assurance Documents	C29

D—Laboratories and Equipment

Appendix D1 (Effective 01/01/08)	Policy Memorandum 6-08.0, Minimum Private Laboratory Requirements for Construction Materials Testing or Mix Design Private Laboratories	D1
Appendix D3 (Effective 10/01/95) (Revised 06/01/12)	Aggregate Laboratory Equipment	D17
Appendix D4 (Effective 04/01/97) (Revised 04/01/10)	Hot-Mix Asphalt Concrete QC/QA Laboratory Equipment	D19
Appendix D5 (Effective 04/01/99) (Revised 02/01/14)	Illinois Specification 101, Minimum Requirements for Electronic Balances	D25
Appendix D6 AASHTO M 92-10	Wire-Cloth Sieves for Testing Purposes	D27
Appendix D7 AASHTO M 201-11 (Illinois Modified 06/01/12)	Moist Cabinets, Moist Rooms, and Water Storage Tanks Used in the Testing of Hydraulic Cements and Concretes	D29
Appendix D8 AASHTO M 205-11 (Illinois Modified 06/01/12)	Molds for Forming Concrete Test Cylinders Vertically	D31
Appendix D9 AASHTO R 18-10	Establishing and Implementing a Quality System for Construction Materials Testing Laboratories	D33

SEQUENTIAL TABLE OF CONTENTS
(continued)
MANUAL OF TEST PROCEDURES
FOR MATERIALS

Standard	*Description*	*Page*
E – End Result Specification		
Appendix E1 (Effective 04/01/10) (Revised 01/01/13)	PFP Quality Level Analysis	E1
Appendix E2 (Effective 05/01/08)	PFP Hot-Mix Asphalt Random Plant Samples.....	E13
Appendix E3 (Effective 04/01/10) (Revised 01/01/13)	PFP Random Density Procedure	E19
Appendix E4 (Effective 04/01/11) (Revised 01/01/13)	PFP Hot Mix Asphalt Random Jobsite Sampling.....	E25
Appendix E5 (Effective 04/01/10)	PFP Dispute Resolution Instructions.....	E37
Appendix E6 (Effective 01/01/12) (Revised 01/01/14)	QCP Pay Calculation	E39
Appendix E7 (Effective 04/01/12)	Best Practices for PFP and QCP Implementation ...	E47

CATEGORICAL TABLE OF CONTENTS
(continued)
MANUAL OF TEST PROCEDURES
FOR MATERIALS

Standard	***Description***	***Page***
	AGGREGATE	
Illinois Specification 201 (Effective 02/01/14)	Aggregate Gradation Sample Size Table	1
Illinois Test Procedure 2 (formerly AASHTO T 2) (Effective 02/01/14)	Sampling of Aggregates	5
Illinois Test Procedure 11 (formerly AASHTO T 11) (Effective 02/01/14)	Materials Finer Than 75-µm (No. 200) Sieve in Mineral Aggregates by Washing	11
Illinois Test Procedure 19 (formerly AASHTO T 19) (Effective 02/01/14)	Unit Weight and Voids in Aggregate	17
Illinois Test Procedure 27 (formerly AASHTO T 27) (Effective 03/01/13)	Sieve Analysis of Fine and Coarse Aggregates	29
Illinois Test Procedure 84 (formerly AASHTO T 84) (Effective 03/01/13)	Specific Gravity and Absorption of Fine Aggregate	37
Illinois Test Procedure 85 (formerly AASHTO T 85) (Effective 03/01/13)	Specific Gravity and Absorption of Coarse Aggregate	45
Illinois Test Procedure 202 (Effective 05/01/07)	Leachate Determination in Crushed Slag Samples	51
Illinois Test Procedure 248 (formerly AASHTO T 248) (Effective 06/01/12)	Reducing Samples of Aggregate to Testing Size	53
Illinois Test Procedure 255 (formerly AASHTO T 255) (Effective 03/01/13)	Total Evaporable Moisture Content of Aggregate by Drying	61
Illinois Test Procedure 4791 (formerly ASTM D 4791) (Effective 06/01/12)	Flat Particles, Elongated Particles, or Flat and Elongated Particles in Coarse Aggregate	107

CATEGORICAL TABLE OF CONTENTS
(continued)
MANUAL OF TEST PROCEDURES
FOR MATERIALS

Standard	***Description***	***Page***
Illinois Test Procedure 5821 (formerly ASTM D 5821) (Effective 06/01/12)	Determining the Percentage of Fractured Particles in Coarse and Fine Aggregate.....	117
	Aggregate QC/QA Policies and Procedures	
Appendix A1 (Effective 01/01/94) (Revised 06/01/12)	Development of Gradation Bands on Incoming Aggregate at Mix Plants (prior HMA QC/QA stand-alone document)	A1
Refer to IDOT Website (Effective 01/01/08) (Revised 01/01/13)	Policy Memorandum 11-08.3, Aggregate Gradation Control System (AGCS) (formerly Appendix A2)	
Appendix A2 (Effective 11/01/95) (Revised 06/01/12)	Quality Control (QC) Manager / Aggregate Technician / AGCS Technician / Mixture Aggregate Technician / IDOT Inspector / Gradation Technician Responsibilities (Chapter 7, Aggregate Technician Course Manual) (formerly Appendix A3).....	A3
Appendix A3 (Effective 11/01/95) (Revised 03/01/13)	Aggregate Producer Control Chart Procedure (Chapter 9, Aggregate Technician Course Manual) (formerly Appendix A4).....	A9
Refer to IDOT Website (Effective 01/01/08) (Revised 06/01/12)	Policy Memorandum 10-08.1, Use of Non-Certified Aggregate Stockpiles Under the Aggregate Gradation Control System (AGCS) (formerly Appendix A5)	
Appendix A4 (Effective 03/04/80) (Revised 11/25/96)	Stockpiling and Handling of Aggregate (Section 40.2, *Manual for Aggregate Inspection)* (formerly Appendix A6).....	A15
Appendix A5 (Effective 11/10/97) (Revised 06/01/12)	Guideline for Sample Comparison (formerly Appendix A7).....	A17
Refer to IDOT Website (Effective 01/01/08) (Revised 06/01/12)	Policy Memorandum 9-08.1, Crushed Slag Producer Certification and Self-Testing Program (formerly Appendix A8)	

Standard	***Description***	***Page***
Refer to IDOT Website (Effective 01/01/08) (Revised 06/01/12)	Policy Memorandum 7-08.1, Recycling Portland Cement Concrete into Aggregate (formerly Appendix A9)	
Refer to IDOT Website (Effective 01/01/08) (Revised 06/01/12)	Policy Memorandum 13-08.1, Slag Producer Self-Testing Procedure (formerly Appendix A10)	
Refer to IDOT Website (Effective 01/01/08) (Revised 06/01/12)	Policy Memorandum 12-08.1, Crushed Gravel Producer Self-Testing Program (formerly Appendix A11)	
Refer to IDOT Website (Effective 01/01/08) (Revised 06/01/12)	Policy Memorandum 14-08.1, Inspection of Stone for Erosion Protection, Sediment Control, and Rockfill (formerly Appendix A12)	
Refer to IDOT Website (Effective 01/01/06)	Policy Memorandum 06-01, Designation of Aggregate Information of Shipping Tickets (formerly Appendix A13)	
	Aggregate Laboratories and Equipment	
Appendix D3 (Effective 10/01/95) (Revised 06/01/12)	Aggregate Laboratory Equipment.....	D17
Appendix D6 AASHTO M 92-10	Wire-Cloth Sieves for Testing Purposes.....	D27
	HOT-MIX ASPHALT (HMA)	
ASTM D 1188-07 (Illinois Modified 04/01/11)	Standard Test Method for Bulk Specific Gravity and Density of Compacted Bituminous Mixtures Using Coated Samples.....	131
ASTM D 2950-91 (Illinois Modified 04/01/10)	Determination of Density of Bituminous Concrete in Place by Nuclear Methods (Density Modified)	133
AASHTO T 30-10 (Illinois Modified 02/01/14)	Mechanical Analysis of Extracted Aggregate.....	147
AASHTO T 164-11 (Illinois Modified 02/01/14)	Quantitative Extraction of Bitumen from Bituminous Paving Mixtures	163
AASHTO T 166-10 (Illinois Modified 04/01/11)	Bulk Specific Gravity of Compacted Bituminous Mixtures Using Saturated Surface-Dry Specimens..	167

Standard	***Description***	***Page***
AASHTO T 209-05 (Illinois Modified 02/01/14)	Maximum Specific Gravity of Bituminous Paving Mixtures	177
AASHTO T 245-97 (2008) (Illinois Modified 06/01/12)	Resistance to Plastic Flow of Bituminous Mixtures Using Marshall Apparatus	187
AASHTO T 283-07 (Illinois Modified 06/01/12)	Resistance of Compacted Bituminous Mixture to Moisture Induced Damage	193
AASHTO T 287-06 (2010) (Illinois Modified 02/01/14)	Asphalt Binder Content of Asphalt Mixtures by the Nuclear Method (Bituminous Concrete QC/QA document)	199
AASHTO T 305-09	Determination of Draindown Characteristics in Uncompacted Asphalt Mixtures	205
AASHTO T 308-09 (Illinois Modified 02/01/14)	Determining the Asphalt Binder Content of Hot-Mix Asphalt (HMA) by the Ignition Method	207
AASHTO T 312-12 (Illinois Modified 02/01/14)	Preparing and Determining the Density of Hot-Mix Asphalt (HMA) Specimens by Means of the Superpave Gyratory Compactor	217
AASHTO T 324-11 (Illinois Modified 02/01/14)	Hamburg Wheel-Track Testing of Compacted Hot Mix Asphalt (HMA)	229
AASHTO M 323-04 (formerly MP 2-99) (Illinois Modified 02/01/14)	Superpave Volumetric Mix Design	235
AASHTO M 325-08 (formerly MP 8-01) (Illinois Modified 02/01/14)	Stone Matrix Asphalt (SMA)	239
AASHTO R 30-02 (2010) (formerly PP 2-99) (Illinois Modified 06/01/12)	Mixture Conditioning of Hot-Mix Asphalt (HMA)	243
AASHTO R 35-04 (formerly PP 28-99) (Illinois Modified 02/01/14)	Superpave Volumetric Design for Hot-Mix Asphalt (HMA)	247
AASHTO R 46-08 (formerly PP 41-01) (Illinois Modified 02/01/14)	Designing Stone Matrix Asphalt (SMA)	253

Standard	***Description***	***Page***
	HMA QC/QA Policies and Procedures	
Appendix B1 (Effective 05/01/93) (Revised 01/01/08)	Model Annual Quality Control (QC) Plan for Hot-Mix Asphalt (HMA) Production	B1
Appendix B2 (Effective 07/01/95) (Revised 05/01/07)	Model Quality Control (QC) Addendum for Hot-Mix Asphalt (HMA) Production	B11
Appendix B3 (Effective 05/01/01) (Revised 04/01/11)	Standard Test Method for Correlating Nuclear Gauge Densities with Core Densities	B13
Appendix B4 (Effective 05/01/93) (Revised 01/01/14)	Hot-Mix Asphalt Concrete QC/QA Start-Up Procedures	B21
Appendix B5 (Effective 05/01/93) (Revised 05/01/07)	Hot-Mix Asphalt Concrete QC/QA QC Personnel Responsibilities and Duties Checklist	B25
Appendix B6 (Effective 05/01/93) (Revised 05/01/07)	Hot-Mix Asphalt Concrete QC/QA Initial Daily Plant and Random Samples	B35
Appendix B7 (Effective 05/01/93) (Revised 04/01/11)	Determination of Random Density Locations	B39
Appendix B8 (Effective 05/01/93) (Revised 01/01/08)	Control Charts / Rounding Test Values	B41
Appendix B9 (Effective 01/01/02) (Revised 01/01/13)	Hot-Mix Asphalt Mixture Design Verification Procedure	B45
Appendix B10 (Effective 05/01/07)	Illinois Test Procedure 401, Storage of Hot-Mix Asphalt Mixtures	B51
Appendix B11 (Effective 01/01/02) (Revised 05/01/07)	Calibration of Equipment for Asphalt Binder Determination (Nuclear Gauge and Ignition Oven)	B53
Appendix B12 (Effective 01/01/98) (Revised 05/01/07)	Hot-Mix Asphalt Concrete Mix Design Procedure for Dust Correction Factor Determination	B57

Standard	***Description***	***Page***
Appendix B13 (Effective 01/01/02) (Revised 05/01/07)	Illinois Test Procedure 403, Calibration of the Ignition Oven for the Purpose of Characterizing Reclaimed Asphalt Pavements (RAP)	B65
Appendix B14 (Effective 01/01/02) (Revised 05/01/07)	Truck Sample Splitting Diagram	B69
Appendix B15 (Effective 05/01/04)	Hot-Mix Asphalt (HMA) Production Gradation Windage Procedure for Minus #200 (minus 75 µm) Material	B71
Appendix B16 (Effective 11/20/03) (Revised 01/01/14)	Stripping of Hot-Mix Asphalt Mixtures Visual Identification and Classification	B73
Appendix B17 (Effective 03/07/05) (Revised 01/01/13)	Procedure for Introducing Additives to Hot Mix Asphalt Mixtures and Testing in the Lab	B77
Appendix B18 (Effective 05/01/05) (Revised 05/01/07)	Ignition Oven Aggregate Mass Loss Procedure	B91
Appendix B19 (Effective 05/01/05) (Revised 05/01/07)	Quick Reference Guides and Procedure for Internal Angle Calibration of Superpave Gyratory Compactors (SGC) Using the Dynamic Angle Validator (DAV-2)	B93
Appendix B20 (Effective 05/01/07)	Segregation Control of Hot-Mix Asphalt	B99
Appendix B21 (Effective 05/01/07) (Revised 04/01/11)	Determination of Reclaimed Asphalt Pavement (RAP) Aggregate Bulk (Dry) Specific Gravity (Gsb)	B101
Appendix B22 (Effective 01/31/08) (Revised 01/01/14)	Use of Correction Factors for Adjusting the Gradation of Cores to Estimate the Gradation of the In-Place Pavement	B105
Appendix B23 (Effective 04/01/10)	Off-Site Preliminary Test Strip and Modified Start-Up Procedure	B107
Appendix B24 (Effective 03/01/13)	Determination of Residual Asphalt in Prime and Tack Coat Materials	B111

Standard	Description	Page
	HMA Laboratories and Equipment	
Appendix D4 (Effective 04/01/97) (Revised 04/01/10)	Hot-Mix Asphalt Concrete QC/QA Laboratory Equipment	D19
	HMA End Result Specifications	
Appendix E1 (Effective 04/01/10) (Revised 01/01/13)	PFP Quality Level Analysis	E1
Appendix E2 (Effective 05/01/08)	PFP Hot-Mix Asphalt Random Plant Samples	E13
Appendix E3 (Effective 04/01/10) (Revised 01/01/13)	PFP Random Density Procedure	E19
Appendix E4 (Effective 04/01/11) (Revised 01/01/13)	PFP Hot Mix Asphalt Random Jobsite Sampling	E25
Appendix E5 (Effective 04/01/10)	PFP Dispute Resolution Instructions	E37
Appendix E6 (Effective 01/01/12) (Revised 01/01/14)	QCP Pay Calculation	E39
Appendix E7 (Effective 04/01/12)	Best Practices for PFP and QCP Implementation	E47
	PORTLAND CEMENT CONCRETE (PCC)	
Illinois Test Procedure 301 (Effective 02/01/14)	Fine Aggregate Moisture Content by Flask Method	65
Illinois Test Procedure 302 (Effective 02/01/14)	Aggregate Specific Gravity and Moisture Content by Dunagan Method	71
Illinois Test Procedure 303 (Effective 02/01/14)	Fine or Coarse Aggregate Moisture Content by Pycnometer Jar Method	79
Illinois Test Procedure 304 (Effective 03/01/13)	Pull-off Test (Surface Method)	83

Standard	***Description***	***Page***
Illinois Test Procedure 305 (Effective 03/01/13)	Pull-off Test (Overlay Method)	87
Illinois Test Procedure 306 (Effective 02/01/14)	Voids Test of Coarse Aggregate for Concrete Mixes	91
Illinois Test Procedure 307 (Effective 03/01/13)	Sampling and Testing of Controlled Low-Strength Material	95
ASTM C 1064/C 1064M-12 (Illinois Modified 02/01/14)	Temperature of Freshly Mixed Portland Cement Concrete	125
ASTM C 1074-11 (Illinois Modified 06/01/12)	Estimating Concrete Strength by the Maturity Method	127
ASTM C 1231/C 1231M-12 (Illinois Modified 02/01/14)	Use of Unbonded Caps in Determination of Compressive Strength of Hardened Concrete Cylinders	129
AASHTO T 22-10 (2011) (Illinois Modified 03/01/13)	Compressive Strength of Cylindrical Concrete Specimens	141
AASHTO T 23-13 (Illinois Modified 02/01/14)	Making and Curing Concrete Test Specimens in the Field	143
AASHTO T119M/T 119-13 (Illinois Modified 02/01/14)	Slump of Hydraulic Cement Concrete	151
AASHTO T 121M/T 121-12 (Illinois Modified 02/01/14)	Weight per Cubic Foot, Yield, and Air Content (Gravimetric) of Concrete	153
AASHTO T 141	**See AASHTO R 60 (Illinois Modified)**	**157**
AASHTO T 152-13 (Illinois Modified 02/01/14)	Air Content of Freshly Mixed Concrete by the Pressure Method	159
AASHTO T 177-10 (Illinois Modified 04/01/11)	Flexural Strength of Concrete (Using Simple Beam with Center Point Loading)	169
AASHTO T 196M/T 196-11 (Illinois Modified 02/01/14)	Air Content of Freshly Mixed Concrete by the Volumetric Method	175
AASHTO T 231-13 (Illinois Modified 02/01/14)	Capping Cylindrical Concrete Specimens	185
AASHTO T 309M/T 309	**See ASTM C 1064/C 1064M (Illinois Modified)**	**211**

Standard	Description	Page
AASHTO T 318-02 (2011) (Illinois Modified 02/01/14)	Water Content of Freshly Mixed Concrete Using Microwave Oven Drying	223
AASHTO T 325-04 (2011) (Effective 03/01/13)	Estimating the Strength of Concrete in Transportation Construction by Maturity Tests	233
AASHTO R 39-07 (2012) (formerly T 126) (Illinois Modified 02/01/14)	Making and Curing Concrete Test Specimens in the Laboratory	251
AASHTO R 60-12 (formerly T 141) (Illinois Modified 02/01/14)	Sampling Freshly Mixed Concrete	255
Self-Consolidating Concrete Provisional Test Methods		
Illinois Test Procedure SCC-1 (Effective 03/01/13)	Sampling, Determining Yield and Air Content, and Making and Curing Strength Test Specimens of Self-Consolidating Concrete	257
Illinois Test Procedure SCC-2 (Effective 04/01/08)	Slump Flow and Stability of Self-Consolidating Concrete	259
Illinois Test Procedure SCC-3 (Effective 05/01/07)	Passing Ability of Self-Consolidating Concrete by J-Ring and Slump Cone	265
Illinois Test Procedure SCC-4 (Effective 03/01/05)	Passing Ability of Self-Consolidating Concrete by L-Box	267
Illinois Test Procedure SCC-6 (Effective 04/01/11)	Static Segregation of Hardened Self-Consolidating Concrete Cylinders	269
Illinois Test Procedure SCC-8 (Effective 01/01/08) (Revised 01/01/14)	Assessment of Dynamic Segregation of Self-Consolidating Concrete During Placement	273
Illinois Provisional Test Procedure SCC-9 (Effective 04/01/11)	Dynamic Segregation of Fresh Self-Consolidating Concrete by Flow Trough	275
Illinois Test Procedure SCC-10 (Effective 03/01/13)	Determining Formwork Pressure of Fresh Self-Consolidating Concrete Using Pressure Transducers	277

Standard	***Description***	***Page***
	PCC QC/QA Policies and Procedures	
Appendix C1 (Effective 12/01/93) (Revised 06/01/12)	Model Quality Control Plan for Concrete Production	C1
Appendix C2 (Effective 12/01/93) (Revised 01/01/14)	Qualifications and Duties of Concrete Quality Control Personnel	C13
Appendix C3 (Effective 12/01/93) (Revised 01/01/14)	Required Sampling and Testing Equipment for Concrete	C19
Appendix C4 (Effective 12/01/93) (Revised 01/01/14)	Method for Obtaining random Samples of Concrete	C25
Appendix C5 (Effective 04/01/10) (Revised 01/01/14)	IDOT Concrete Quality Control and Quality Assurance Documents	C29
	PCC Laboratories and Equipment	
Appendix D7 AASHTO M 201-11 (Illinois Modified 06/01/12)	Moist Cabinets, Moist Rooms, and Water Storage Tanks Used in the Testing of Hydraulic Cements and Concrete	D29
Appendix D8 AASHTO M 205-11 (Illinois Modified 06/01/12)	Molds for Forming Concrete Test Cylinders Vertically	D31
	SOILS	
Illinois Test Procedure 501 (formerly 401) (Effective 04/01/10)	Dynamic Cone Penetration (DCP)	97
Illinois Test Procedure 502 (formerly 402) (Effective 04/01/10)	Static Cone Penetration (SCP)	103
AASHTO T 99-10 (Illinois Modified 02/01/14)	Moisture-Density Relations of Soils Using a 2.5-kg (5.5-lb) Rammer and a 305-mm (12-in.) Drop	149

Standard	Description	Page
AASHTO T 134-05 (2009) (Illinois Modified 02/01/14)	Moisture-Density Relations of Soil-Cement Mixtures	155
AASHTO T 180-10 (Illinois Modified 02/01/14)	Moisture-Density Relations of Soils Using a 4.54-kg (10-lb) Rammer and a 457-mm (18-in.) Drop	171
AASHTO T 191-13 (Illinois Modified 02/01/14)	Density of Soil In-Place by the Sand-Cone Method	173
AASHTO T 217-13 (Illinois Modified 02/01/14)	Determination of Moisture in Soils by Means of a Calcium Carbide Gas Pressure Moisture Tester	181
AASHTO T 224-10 (Illinois Modified 02/01/14)	Correction of Coarse Particles in the Soil Compaction Test	183
AASHTO T 265-12 (Illinois Modified 03/01/13)	Laboratory Determination of Moisture Content of Soils	189
AASHTO T 272-10 (Illinois Modified 02/01/14)	Family of Curves - One-Point Method	191
AASHTO T 310-13 (Illinois Modified 02/01/14)	In-Place Density and Moisture Content of Soil and Soil-Aggregate by Nuclear Methods (Shallow Depth)	213
	GENERAL	
ASTM E 29-13 (Illinois Modified 02/01/14)	Using Significant Digits in Test Data to Determine Conformance with Specifications	139
	General Laboratories and Equipment	
Appendix D1 (Effective 01/01/08)	Policy Memorandum 6-08.0, Minimum Private Laboratory Requirements for Construction Materials Testing or Mix Design Private Laboratories	D1
Appendix D5 (Effective 04/01/99) (Revised 02/01/14)	Illinois Specification 101, Minimum Requirements for Electronic Balances	D25
Appendix D9 AASHTO R 18-10	Establishing and Implementing a Quality System for Construction Materials Testing Laboratories	D33

This Page Reserved

COPYRIGHT NOTICE

This Manual includes Illinois Modified Test Procedures to be used in conjunction with and according to the noted ASTM and AASHTO test methods. ASTM and AASHTO test methods cannot be reproduced in this manual due to copyright. Individual ASTM and AASHTO standards may be requested from the respective addresses below:

ASTM
100 Barr Harbor Drive
West Conshohocken, PA 19428-2959
(610) 832-9500
www.astm.org

Contact:
Mark Axelman
ASTM International
Email: maxelman@astm.org

AASHTO
444 North Capitol Street, N. W.
Suite 249
Washington, D.C. 20001
(202) 624-5800
www.transportation.org

This Page Reserved

Illinois Specification 201
Illinois Department of Transportation (IDOT)
AGGREGATE GRADATION SAMPLE SIZE TABLE & QUALITY CONTROL SIEVES
Effective February 1, 2014

COARSE AGGREGATE GRADATION TABLE																			
CA(CM)[1, 2]	**Minimum Field Sample Size[3]**	**Minimum Test Sample Size[3]**	**3”**	**2 1/2”**	**2”**	**1 3/4”**	**1 1/2”**	**1”**	**3/4”**	**5/8”**	**1/2”**	**3/8”**	**1/4”**	**#4**	**#8**	**#16**	**#40**	**#50**	**#200**
CA01	110 lbs (50 kg)	10,000 g	X	X[MN]	X		X	X											X
CA02	110 lbs (50 kg)	10,000 g		X	X[MN]		XC	X	XC		X			X		X	X		X
CA03	110 lbs (50 kg)	10,000 g		X	X[MN]		X	X			X								X
CA04	110 lbs (50 kg)	10,000 g			X		X[MN]	X	XC		X	XC		X		X	X		X
CA05[5]	110 lbs (50 kg)	10,000 g				X	X[MN]	X[MB,6]	XC		X			X[6]					X
CA06	55 lbs (25 kg)	5,000 g					X	X[MN]	XC		X	XC		X		X	X		X
CA07[5]	55 lbs (25 kg)	5,000 g					X	X[MN]	XC	XC	X[MB,6]	XC	XC	X[6]					X
CA08	55 lbs (25 kg)	5,000 g					X	X[MN]	X	XC	X	XC	XC	X		X			X
CA09	55 lbs (25 kg)	5,000 g					X	X[MN]	XC	XC	X	XC	XC	X		X			X
CA10	55 lbs (25 kg)	5,000 g						X	X[MN]	XC	X	XC	XC	X		X	X		X
CA11[5]	55 lbs (25 kg)	5,000 g						X	X[MN]	XC	X[MB,6]	XC	XC	X		X[6]			X
CA12	35 lbs (16 kg)	2,000 g							X		X[MN]	X	XC	X	XC	X	X		X
CA13[5]	35 lbs (16 kg)	2,000 g							X		X[MN]	X	XC	X[MB,6]	XC	X[6]			X
CA14[5]	35 lbs (16 kg)	2,000 g								X	X[MN]	X[MB,6]	XC	X[6]					X
CA15	35 lbs (16 kg)	2,000 g									X	X[MN]	XC	X	XC	X			X
CA16[5]	25 lbs (11 kg)	1,500 g									X	X[MN]	XC	X[MB,6]	XC	X[6]			X
CA17	35 lbs (16 kg)[4]	4,000 g[4]	X		XC			XC			XC	XC		X[MN, 4]		X		X	X
CA18	35 lbs (16 kg)[4]	4,000 g[4]	X					X[MN, 4]			XC	XC		X		X		X	X
CA19	35 lbs (16 kg)[4]	4,000 g[4]	X					X[MN, 4]			XC	XC		X		X	X	X	X
CA20	25 lbs (11 kg)	2,000 g									X	X[MN]	XC	X	X	X			X

Note: See footnotes below Fine Aggregate Gradation Table for explanation of symbols

Illinois Specification 201
Illinois Department of Transportation (IDOT)
AGGREGATE GRADATION SAMPLE SIZE TABLE & QUALITY CONTROL SIEVES
Effective February 1, 2014

FINE AGGREGATE GRADATION TABLE															
FA(FM)[1, 2]	**Minimum Field Sample Size[3]**	**Minimum Test Sample Size[3]**	**1"**	**1/2"**	**3/8"**	**#4**	**#8**	**#10**	**#16**	**#30**	**#40**	**#50**	**#80**	**#100**	**#200**
FA01	25 lbs (11 kg)	500 g			X	X[MN]	X[MB]		X	X[MB]		X		X	X
FA02	25 lbs (11 kg)	500 g			X	X[MN]	X[MB]		X	X[MB]		X		X	X
FA03	25 lbs (11 kg)	500 g			X	X[MN]		X			X		X		X
FA04	25 lbs (11 kg)	500 g			X				X[MN]						
FA05	25 lbs (11 kg)	500 g			X	X[MN]								X	X
FA06	25 lbs (11 kg)	500 g	X	X	X	X[MN]								X	X
FA07	25 lbs (11 kg)	100 g				X		X[MN]			X		X		X
FA08	25 lbs (11 kg)	100 g					X				X[MN]			X	X
FA09	25 lbs (11 kg)	100 g					X					X[MN]		X	X
FA10	25 lbs (11 kg)	100 g						X			X[MN]		X		X
FA20[5]	25 lbs (11 kg)	500 g			X	X[MN]	X[MB]		X	X[MB, 6]		X		X	X[6]
FA21[5]	25 lbs (11 kg)	500 g			X	X[MN]	X[MB]		X	X[MB, 6]		X		X	X[6]
FA22[5]	25 lbs (11 kg)	500 g			X	X[MB]	X[MB, 6]		X						X[6]

Notes below apply to Fine and Coarse Aggregate Gradation Tables Only

X = Required Gradation Specification Sieves
XC = Required Cutter Sieves
MB = Master Band Sieves for Category I & II Coarse Aggregate for PCC and HMA Mixes; Bituminous use only for fine aggregate.
MN = Maximum Nominal Sieve for Crushed Gravels – Maximum Nominal Size is defined as the first specification sieve in the product gradation on which material may be retained.
1 = CA = Coarse Aggregate; CM = Coarse Aggregate, Modified; FA = Fine Aggregate; FM = Fine Aggregate, Modified
2 = CM and FM gradations shall be sampled and tested the same as the corresponding CA and FA gradations.
3 = Slag should be adjusted accordingly due to its lighter or heavier mass.
4 = Will vary with the gradation of the material being used
5 = Control Charts Required
6 = Required Sieve for Control Charts

Illinois Specification 201
Illinois Department of Transportation (IDOT)
AGGREGATE GRADATION SAMPLE SIZE TABLE & QUALITY CONTROL SIEVES
Effective February 1, 2014

LARGE SIZED AGGREGATE GRADATION TABLE										
CS/RR[1, 2]	**Minimum Test Sample Size[3]**	**8”**	**6”**	**4”**	**3”**	**2”**	**1 ½”**	**1”**	**½”**	**#4**
CS01	20,000 g	X	X	X	XC	X		XC	XC	X
CS02	15,000 g		X	X	XC	X		XC	XC	X
RR01	10,000 g				X	XC	X	XC	XC	X
RR02	10,000 g			X	XC	X	XC	XC	XC	X

Notes below apply to Large Sized Aggregate Gradation Table Only

X = Required Gradation Specification Sieves
XC = Required Cutter Sieves
1 = CS = Coarse Aggregate Subgrade; RR/RRM = Rip Rap
2 = Dry Gradations Only
3 = Slag should be adjusted accordingly due to its lighter or heavier mass.
4 = A round nosed shovel may be used for sampling
5 = Metal plates with precisely sized square holes may be used for the gradation
6 = Test sample size shall be taken in the field. No splitting is required.

This Page Reserved

ILLINOIS TEST PROCEDURE 2

SAMPLING OF AGGREGATES

Effective Date: April 1, 2012
Revised Date: February 1, 2014

1 SCOPE

1.1 This procedure covers sampling of coarse and fine aggregates for the following purposes.

1.1.1 Preliminary investigation of the potential source of supply.

1.1.2 Control of the product at the source of supply.

1.1.3 Control of the operations at the site of use.

1.1.4 Acceptance or rejection of the materials.

Note 1 – Sampling plans and acceptance and control tests vary with the type of construction in which the material is used.

1.2 The text of this standard references notes which provide explanatory material. These notes (excluding those in tables and figures) shall not be considered as requirements of the procedure.

1.3 The values stated in either SI units or inch-pound units are to be regarded separately as standard. The values stated in each system may not be exact equivalents; therefore, each system shall be used independently of the other. Combining values from the two systems may result in non-conformance with the procedure.

1.4 *This standard does not purport to address all of the safety concerns, if any, associated with its use. It is the responsibility of the user of this procedure to establish appropriate safety and health practices and determine the applicability of regulatory limitations prior to use.*

Note 2 – The quality of the results produced by this procedure are dependent on the competence of the personnel performing the procedure and the capability, calibration, and maintenance of the equipment used.

2 REFERENCED DOCUMENTS

2.1 Illinois Specification:

- Illinois Specification 201 Aggregate Gradation Sample Size Table

3 TERMINOLOGY

3.1 *Definitions*:

3.1.1 *maximum size of aggregate, n*—in specifications for, or descriptions of aggregate—the smallest sieve opening through which the entire amount of aggregate is required to pass.

3.1.2 *maximum aggregate size, (Superpave) n*—in specifications for , or descriptions of aggregate—one size larger than the nominal maximum aggregate size.

3.1.3 *nominal maximum aggregate size (of aggregate), n*—in specifications for, or descriptions of aggregate—smallest sieve opening through which the entire amount of the aggregate is permitted to pass.

3.1.4 *nominal maximum aggregate size (Superpave), n*—in specifications for, or descriptions of aggregate—one size larger than the first sieve that retains more than 10% aggregate.

3.1.4.1 *Discussion*—These definitions in 3.1.2 and 3.1.4 apply to hot mix asphalt (HMA) mixtures designed using the Superpave system only.

3.1.4.2 *Discussion* -Specifications on aggregates usually stipulate a sieve opening through which all the aggregate may, but need not, pass so that a slated maximum portion of the aggregate may be retained on that sieve. A sieve opening so designated is the nominal maximum size.

4 SIGNIFICANCE AND USE

4.1 Sampling is equally as important as the testing, and the sampler shall use every precaution to obtain samples that will show the nature and condition of the materials which they represent.

5 APPARATUS

5.1 *Template* – The template shall be designed with two end plates and shall be adjustable. The distance between the end plates may therefore be changed to gather more material from the belt for each increment. The end plates shall also be machined or cut to the approximate belt size and shape.

A single template end plate may be used in the sampling procedure, if care is exercised.

5.2 *Sampling Device* – The sample device used to cut the flow stream from the end of the belt or the bin discharge must be strong enough to handle the force of the flow stream. The device must also be large and deep enough to cut the <u>entire</u> flow stream and not overflow when passing through the stream. The device may be a bucket, a pan, or a manufactured sampling container.

Shelby tubes are not allowed as sampling devices.

5.3 *Shovel* – The shovel shall be square-nosed and of a size easily handled. It shall also have built-up sides and back (approximately 1 ½" [37.5mm]) to facilitate the retention of material on the shovel when sampling.

6 SECURING SAMPLES

6.1 *General* – Where practicable, samples to be tested for quality shall be obtained from the finished product. Samples from the finished product to be tested for abrasion loss shall not be subject to further crushing or manual reduction in particle size in preparation for the abrasion test unless the size of the finished product is such that it requires further reduction for the testing purposes.

6.2 *Inspection* – The material shall be inspected to determine discernible variations. The seller shall provide suitable equipment needed for proper inspection and sampling.

6.3 *Sampling Procedure* – Aggregate production sampling shall be accomplished by one of the following procedures:

1. belt-stream sampling
2. bin-discharge sampling (requires IDOT approval)
3. on-belt sampling
4. truck-dump or stockpile sampling

Aggregate stockpile sampling shall be accomplished by any of the procedures notes above.

No other sampling procedures will be permitted.

6.3.1 *Sampling from Belt-Stream Discharge or from Bins:*

Belt-Stream Sampling – The sample shall be taken by cutting the stream of aggregate as it leaves the end of the production belt. A sampling device is passed uniformly through the <u>entire</u> width and depth stream flow during normal production and belt load. Each sampling pass (increment) is combined with others to make up the field sample. A minimum of three increments shall be taken during a 10 to 15 minute sampling period. Enough increments shall be taken and combined to provide the correct field sample size.

Extreme care shall be taken to make sure the sampling device passes completely and uniformly through the <u>entire</u> stream flow (from outside the stream on one side to outside the stream on the other side) and to ensure the device does not overflow.

Bin Sampling – Bin discharge shall be sampled in a manner similar to belt-stream sampling. A sampling device is passed through the entire bin discharge stream. A minimum of three increments shall be taken during a 10 to 15 minute sampling period and combined to form the field sample.

Before cutting the bin discharge stream, the bin must be emptied until such time that the stream of material entering the bin is the stream of material exiting the bin. Sampling may take place at that time.

Extreme care shall be taken to make sure the sampling device passes completely and uniformly through the entire stream flow (from outside the stream on one side to outside the stream on the other side) and to ensure the device does not overflow.

Samples shall be taken only during normal plant operation and when the bin is being fed under normal load.

The major problems associated with bin-discharge sampling involve segregated material clinging to the sides of the bin. This material can and does break loose which alters the gradation of the bin-discharge stream. The sampling procedure shall therefore be used only when approved by the District Engineer.

.

6.3.2 *On-Belt Sampling* – The sample shall be taken by stopping the belt containing the finished product. A template shall be inserted into the material on the belt. All the material between the template shall be removed and shall represent one of the three increments (minimum) making up the field sample. Extreme care shall be taken, including the use of a brush, to remove all fines on the belt between the template for inclusion in the increment. The belt shall be stopped at least three times (three increments) during approximately 10 to 15 minutes of operation to obtain a field sample. If additional material is needed beyond three increments due to the amount of material on the belt, additional template cuts may be taken during the three belt stoppages. Automatic samplers may be used as long as the gradations compare to samples taken with the sample template. Contact BMPR for further guidance.

Samples shall be taken only during normal plant operation and when the belt is under normal load.

6.3.3 *Sampling from Truck-Dumps or from Stockpiles* – Sampling from inside of transportation units is not permitted. The transportation unit shall be off-loaded and sampled by any of the sampling procedures listed, herein.

Truck-Dump Sampling – The sample shall be taken by placing one or two truck dumps together. This may occur during the building of a stockpile or feeding of a plant. The truck dump(s) shall be cut with an end loader and two or more bucket loads extracted. The bucket loads shall be dumped on one another to form a small pile. The small pile shall then be mixed from two directions perpendicular to each other. To mix the pile, the end loader shall cut into the pile along its base until approximately its midpoint. The loader bucket shall be lifted, the loader moved 1 to 2 feet forward, and the bucket dumped on the other half of the pile. Care shall be exercised to avoid cutting below the base of the truck dumps or small pile and contaminating the material to be sampled.

After mixing twice, the end loader shall drop the angle of its bucket downward on one side of the pile and back drag the pile into a layer not less than 1 foot thick.

The layer shall be sampled using a required shovel to take increments in a random "X" pattern over the layer. The shovel shall be forced vertically to its full depth when sampling each increment except that care shall be used to not dig completely through the layer. This would contaminate the sample being obtained. Care shall also be exercised to retain as much material on the shovel as possible when taking increments. Sufficient increments shall be taken to make up a correct field sample.

Stockpile Sampling – The sample shall be taken from the working face of the stockpile. The working face shall be parallel to the direction of flow used to build the stockpile. Stockpiles having no working face shall have one established prior to sampling. The working face shall have the interior of the pile exposed to permit proper re-blending of the pile to eliminate segregated aggregate. If necessary, material may be brought out of the main pile's working face into the sub-stockpile for sampling.

The stockpile sampling procedure shall follow the truck-dump sampling procedure using an end loader. The end loader shall cut across the working face as detailed in "Truck-Dump Sampling." Any special mixing procedure used during loading shall be used when taking any samples.

6.4 *Number and Masses of Field Samples*:

6.4.1 The number of field samples (obtained by one of the methods described in 5.3) required depends on the criticality of, and variation in, the properties to be measured. Designate each unit from which a field sample is be obtained prior to sampling. The number of field samples from the production should be sufficient to give the desired confidence in test results.

6.4.2 *Field Sample Sizes* – The field sample size shall meet the minimum requirements as detailed in the Illinois Specification 201.

7 Shipping Samples

7.1 Transport aggregates in bags or other containers so constructed as to preclude loss or contamination of any part of the sample, or damage to the contents from mishandling during shipment.

7.2 Shipping containers for aggregate samples shall have a LM-5 envelope attached to the container. Written on the outside of the LM-5 shall be the following information: producer number, test id# (including suffix), material code, ledge description. The required information to be written on the outside of the LM-5 shall also be written on the outside of the sample container. Inside the LM-5 shall contain a fully completed LM-6 form. The LM-6 form shall be the most recent version of the Bureau of

Materials and Physical Research online template (no other LM-6 forms will be accepted).

8 Red Tag Samples – Used for Quality Samples only.

8.1 The Bureau of Materials and Physical Research has established a procedure which allows the producer the opportunity to delivering their quality samples directly to the Springfield testing facility.

Your sample, taken by the district, will be sampled following the procedures outlined in this test procedure. Upon completion of the sampling the District shall "Red Tag" the sample containers. During the tagging process the District shall write the "Red Tag" serial number on the LM-6 form. If the serial number is not indicated on the LM-6 form the samples will not be accepted.

Once the sample containers are tagged and the documentation has been completed the producer will then be allowed to deliver the samples to the Bureau.

9 Keywords

9.1 aggregates; exploration of potential sources; aggregates; number and sizes needed to estimate character; aggregates; sampling

ILLINOIS TEST PROCEDURE 11

MATERIALS FINER THAN 75-µm (No. 200) SIEVE IN MINERAL AGGREGATES BY WASHING

Effective Date: April 1, 2012
Revised Date: February 1, 2014

1 SCOPE

1.1 This test procedure covers the determination of the amount of material finer than a No. 200 (75µm) sieve in aggregate by washing. Clay particles and other aggregate particles that are dispersed by the wash water, as well as water-soluble materials, will be removed from the aggregate during the test.

1.2 There are two methods. Method A uses only water for the operation. Method B includes the use of a wetting agent to assist in the loosening of the material finer than the No. 200 (75µm) sieve from the coarser material. A wetting agent such as detergent or dispersing solution is recommended.

1.3 The values stated in SI units are to be regarded as the standard.

1.4 *This standard does not purport to address all of the safety concerns, if any, associated with its use. It is the responsibility of the user of this procedure to establish appropriate safety and health practices and determine the applicability of regulatory limitations prior to use.*

2 REFERENCED DOCUMENTS

2.1 Illinois Test Procedures (ITP):

- ITP 2, Sampling of Aggregates
- ITP 27, Sieve Analysis of Fine and Coarse Aggregates
- ITP 248, Reducing Samples of Aggregate to Testing Sizes

2.2 Illinois Specifications:

- Illinois Specification 201, Aggregate Gradation Sample Size Table

2.3 *AASHTO Standards*:

- M 231, Weighing Devices Used in the Testing of Materials

2.4 ASTM Standards:

- E 11, Woven Wire Test Sieve Cloth and Test Sieves
- E 29 (Illinois Modified), Using Significant Digits in Test Data to Determine Conformance with Specifications

ILLINOIS TEST PROCEDURE 11

MATERIALS FINER THAN 75-µm (No. 200) SIEVE IN MINERAL AGGREGATES BY WASHING

Effective Date: April 1, 2012
Revised Date: February 1, 2014

3 SUMMARY OF METHOD

3.1 A sample of the aggregate is washed in a prescribed manner, using either plain water or water containing a wetting agent, as specified. The decanted wash water, containing suspended and dissolved material, is passed through a No. 200 (75µm) sieve. The loss in mass resulting from the wash treatment is calculated as mass percent of the original sample and is reported as the percentage of material finer than a No. 200 (75µm) sieve by washing.

4 SIGNIFICANCE AND USE

4.1 Material finer than the No. 200 (75µm) sieve can be separated from larger particles much more efficiently and completely by wet sieving than through the use of dry sieving. Therefore, when accurate determinations of material finer than No. 200 (75µm) in fine or coarse aggregate are desired, this test method is used on the sample prior to dry sieving in accordance with ITP 27. The results of this test method are included in the calculation in ITP 27, and the total amount of material finer than the No. 200 (75µm) by washing, plus that obtained by dry sieving the same sample, is reported with the results of ITP 27. Usually the additional amount of material finer than No. 200 (75µm) obtained in the dry-sieving process is a small amount. If it is large, the efficiency of the washing operation should be checked. A large amount of material could also be an indication of degradation of the aggregate.

4.2 Plain water is adequate to separate the material finer than No. 200 (75µm) from the coarser material with most aggregates. In some cases, the finer material is adhering to the larger particles, such as some clay coatings and coatings on aggregates that have been extracted from bituminous mixtures. In these cases, the fine material will be separated more readily with a wetting agent in the water.

5 APPARATUS AND MATERIALS

5.1 *Balance* – The balance shall have sufficient capacity, be readable to 0.1 percent of the sample mass, or better, and conform to the requirements of M 231.

5.2 *Sieves* – A nest of two sieves, the lower being a No. 200 (75µm) sieve and the upper being a sieve with openings in the range of No. 8 (2.36mm) to No. 16 (1.18mm), both conforming to the requirement of ASTM E 11.

5.3 *Container* – A pan or vessel of a sufficient size to contain the sample covered with water and to permit vigorous agitation without loss of any part of the sample or water.

5.4 *Oven* – An oven of sufficient size, capable of maintaining a uniform temperature of 230±9˚F (110±5˚C). The oven shall be specifically designed for drying. In addition, a gas burner or electric hot plate may be used. Microwave ovens are <u>not</u> permitted for drying aggregate gradation samples.

5.5 *Wetting Agent* – Any dispersing agent, such as liquid dishwashing detergents, that will promote separation of the fine materials

Note 1 – A mechanical device, such as a Ploog Washer, may be used for coarse aggregate samples providing its results match the manual procedure. When using a mechanical washing device, loss of fines from damage to the drum or dripping water will not be allowed. Applying wax to the rim of the drum will help prevent water from dripping down the outside of the drum.

6 SAMPLING

6.1 Field samples of aggregate shall be taken according to ITP 2. The field sample size shall meet the minimum requirements in the Illinois Specification 201.

6.2 Field samples of aggregate shall be reduced to test sample size before testing according to ITP 248.

Test sample size for gradation samples shall meet the minimum requirements found in the Illinois Specification 201.

7 PROCEDURE

7.1 The test sample shall be dried back to constant mass in an oven specifically designed for drying, set at and capable of maintaining a uniform temperature of 230±9˚F (110±5˚C). Constant mass is defined as the sample mass at which there has not been more than a 0.5 gram mass loss during 1 hour of drying. This should be verified occasionally.

The sample may also be dried to constant mass in a pan on an electric hot plate or gas burner. The technician shall continually attend the sample when drying on the electric hot plate or gas burner. The electric hot plate or gas burner should be operated on a low-as-needed heat to prevent popping, crackling, and/or sizzling noise from the aggregate during drying. If these noises occur, the heat must be turned down and/or the sample must be constantly stirred during drying to prevent potential aggregate particle breakdown.

After the test sample has been dried to constant mass and cooled down to room temperature, the sample shall have its mass determined to the nearest 1 gram for coarse aggregate and to the nearest 0.1 gram for fine aggregate. All balances or scales shall be tared before being used to determination of mass required by this test procedure. This procedure provides the “Total Dry Mass, g” (TDM) of the original test sample.

7.2 After drying and determining the mass, place the test sample in the container and add sufficient water to cover it. No detergent, dispersing agent, or other substance shall be added to the water. Agitate the sample with sufficient vigor to result in complete separation of all particles finer than the No. 200 (75µm) sieve from the coarser particles, and to bring the fine material into suspension. The use of a large spoon or other similar tool shall be used to stir and agitate the aggregate in the wash water. Once the wash water becomes clear pour the wash water containing the suspended and dissolved solids over the nested sieves, arranged with the coarser sieve on top. Take care to avoid, as much as feasible, the decantation of coarser particles of the sample.

7.3 Add a second charge of water to the sample in the container, agitate, and decant as before. Repeat this operation until the wash water is clear.

Note 2 – If mechanical washing equipment is used, the charging of water, agitating, and decanting may be a continuous operation.

Note 3 – A spray nozzle or a piece of rubber tubing attached to a water faucet may be used to rinse any of the material that may have fallen onto the sieves. The velocity of water, which may be increased by pinching the tubing or by use of a nozzle, should not be sufficient to cause any splashing of the sample over the sides of the sieve.

7.4 Return all material retained on the nested sieves by flushing per note 5 . Dry the washed test sample to constant mass and determine the mass of the test sample in the same manner as detailed in 8.1 herein. This procedure provides the "Total Wash Mass, g" (TWM).

Note 4 – Following the washing of the sample and flushing any material retained on the No. 200 (75µm) sieve back into the container by washing from the back of the sieve. No water should be decanted from the container except through the No. 200 (75µm) sieve, to avoid loss of material. Excess water from flushing should be evaporated from the sample in the drying process.

8 CALCULATION

8.1 The "Percent Minus No. 200 (75µm) by Washing" shall be determined by using the following formula:

$$\% \text{ - No. 200 (-75µm) by Washing} = \frac{TDM - TWM}{TDM} X\ 100$$

where TDM = Total Dry Mass, g
and TWM = Total Wash Mass, g.

9 REPORT

9.1 The test results shall be rounded to the nearest 0.1 percent and recorded on the Illinois Department of Transportation (IDOT) gradation form. All rounding shall be according to ASTM E 29 (Illinois Modified)

This Page Reserved

ILLINOIS TEST PROCEDURE 19

BULK DENSITY ("UNIT WEIGHT") AND VOIDS IN AGGREAGATE

Effective Date: April 1, 2012
Revised Date: February 1, 2014

1 SCOPE

1.1. This test procedure covers the determination of bulk density ("unit weight") of aggregate in a compacted or loose condition, and calculated voids between particles in fine, coarse, or mixed aggregates based on the same determination. This test method is applicable to aggregates not exceeding 125mm (5 in.) in nominal maximum size.

Note 1 – Unit weight is the traditional terminology used to describe the property determined by this test method, which is weight per unit volume (more correctly, mass per unit volume or density).

1.2. The values stated in either inch-pound units or acceptable metric units are to be regarded separately as standard, as appropriate for a specification with which this test method is used. An exception is with regard to sieve sizes and nominal size of aggregate, in which the metric values are the standard as stated in ASTM E 11. Within the text, inch-pound units are shown in brackets. The values stated in each system in ASTM E 11. Within the text, inch-pound units are shown in brackets. The values stated in each system may not be exact equivalents; therefore, each system must be used independently of the other, without combining values in any way.

1.3. *This standard does not purport to address all of the safety concerns, if any, associated with its use. It is the responsibility of the user of this procedure to establish appropriate safety and health practices and determine the applicability of regulatory limitations prior to use.*

2 REFERENCED DOCUMENTS

2.1 Illinois Test Procedures (ITP):

- ITP 2, Sampling of Aggregates
- ITP 84, Specific Gravity and Absorption of Fine Aggregate
- ITP 85, Specific Gravity and Absorption of Coarse Aggregate
- ITP 248, Reducing Samples of Aggregate to Testing Size

Illinois Specifications:

- Illinois Specification 201 Aggregate Gradation Sample Size Table

AASHTO Standards:

- M 231, Weighing Devices Used in the Testing of Materials
- T 121M/T 121 (Illinois Modified), Density (Unit Weight), Yield and Air Content (Gravimetric) of Concrete

2.2. *ASTM Standards:*

- C 29/C 29M, Standard Test Method for Bulk Density ("Unit Weight") and Voids in Aggregate
- C 125, Standard Terminology Relating to Concrete and Concrete Aggregates
- C 670, Standard Practice for Preparing Precision and Bias Statements for Test Methods for Construction Materials
- D 123, Standard Terminology Relating to Textiles
- E 11, Woven Wire Test Sieve Cloth and Test Sieves
- E 29 (Illinois Modified), Standard Practice for Using Significant Digits in Test Data to Determine Conformance with Specifications

3. TERMINOLOGY

3.1. *Bulk density*, n – of aggregate, the mass of a unit volume of bulk aggregate material, in which the volume includes the volume of the individual particles and the volume of the voids between the particles. Expressed in lb/ft^3 (kg/m$^{3)}$.

3.1.1 *Discussion* – units of mass are the pound (lb), the kilogram (kg), or units derived from these. Mass may also be visualized as equivalent to inertia, or the resistance offered by a body to change of motion (acceleration). Masses are compared by weighing the bodies, which amounts to comparing the forces of gravitation acting on them. ASTM D 123.

3.2 *Unit weight*, n - weight (mass) per unit volume. (Deprecated term - used preferred term bulk density.)

3.2.1. *Discussion* – the term weight means the force of gravity acting on the mass.

3.3 *Weight*, n – the force exerted on a body by gravity. (See also mass.)

3.3.1 *Discussion* – weight is equal to the mass of the body multiplied by the acceleration due to gravity. Weight may be expressed in absolute units (poundals, newtons) or in gravitational units (lbf, kgf), for example: on the surface of the earth, a body with a mass of 1lb has a weight of 1 lbf (approximately 32.2 poundals or 4.45N), or a body with a mass of 1kg has a weight of 1kgf (approximately 9.81N). . Since weight is equal to mass times the acceleration due to gravity the weight of a body will vary with the location where the weight is determined, while the mass of the body remains constant. On the surface of the earth, the force of gravity imparts to a body that is free to fall an acceleration of approximately 32.2 ft/s^2 (9.81m/s$^{2)}$. ASTM D 123.

3.4 *Voids*, n – in unit volume of aggregate, the space between particles in an aggregate mass not occupied by solid mineral matter.

3.4.1 *Discussion* – voids within particles, either permeable of impermeable, are not included in voids as determined by 13.2, herein. .

4. SIGNIFICANCE AND USE

4.1. This test method is often used to determine bulk density values that are necessary for use for many methods of selecting proportions for concrete mixtures.

4.2. The bulk density also may be used for determining mass/volume relationships for conversions in purchase agreements. However, the relationship between degree of compaction of aggregates in a hauling unit or stockpile and that achieved in this method is unknown. Further, aggregates in hauling units and stockpiles usually contain absorbed and surface moisture (the latter affecting bulking), while this method determines the bulk density on a dry basis.

4.3. A procedure is included for computing the percentage of voids between the aggregate particles based on the bulk density determined by this method.

5. APPARATUS

5.1. *Balance* – The balance shall have sufficient capacity, be readable to 0.1 percent of the sample mass, or better, and conform to the requirements of AASHTO M 231.

5.2. *Tamping Rod* – A round, straight steel rod, 5/8 " (16mm) in diameter and a minimum of 23 inches (584mm) long, having one end rounded to a hemispherical tip of the same diameter as the rod.

5.3. *Measure* – A cylindrical metal measure, preferably provided with handles. It shall be watertight, with the top and bottom true and even, and sufficiently rigid to retain its form under rough usage. The measure should have a height approximately equal to the diameter, but in no case shall the height be less than 80 percent nor more than 150 percent of the diameter. The capacity of the measure shall conform to the limits in Table 1 for the aggregate size to be tested. The thickness of metal in the measure shall be as described in Table 2. The top rim shall be smooth and plane within 0.01 in. (0.25mm) and shall be parallel to the bottom within 0.5° (Note 2). The interior wall of the measure shall be a smooth and continuous surface.

Table 1 – Capacity of Measures

Nominal Maximum Size of Aggregate		Capacity of Measure[a]	
in mm	mm in	Ft^3 L (m^3)	L ($m^{3)}$ ft^3
½	12.5	1/10	2.8 (0.0028)
1	25.0	1/3	9.3 (0.0093)
1 1/2	37.5	1/2	14 (0.014)
3	75	1	28 (0.028)
4	100	2 1/2	70 (0.070)
5	125	3 1/2	100 (0.100)

The indicated size of measure shall be used to test aggregates of a nominal maximum size equal to or smaller than that listed. The actual volume of the measure shall be at least 95 percent of the nominal volume listed.

Note 2 – The top rim is satisfactorily plane if a 0.01 in (0.25mm) feeler gauge cannot be inserted between the rim and a piece of 6mm (1/4 in.) or thicker plate glass laid over the measure. The top and bottom are satisfactorily parallel if the slope between pieces of plate glass in contact with the top and bottom does not exceed 0.87 percent in any direction.

5.3.1. If the measure also is to be used for testing for bulk density of freshly mixed concrete according to AASHTO T 121M/T 121 (Illinois Modified), the measures shall be made of steel or other suitable metal not readily subject to attack by cement. Reactive materials, such as aluminum alloys are permitted, where as a consequence of an initial reaction, a surface film is formed which protects the metal against further corrosion.

5.3.2. Measures larger than nominal 1 ft^3 (28L) capacity shall be made of steel for rigidity, or the minimum thicknesses of metal listed in Table 2 should be suitably increased.

5.4. *Shovel or Scoop* – A shovel or scoop of convenient size for filling the measure with aggregate.

5.5. *Calibration Equipment*

5.5.1. *Plate Glass* – A piece of plate glass, preferably at least ¼ in (6mm) thick and at least 1in (25mm) larger than the diameter of the measure to be calibrated.

Table 2 – Requirements for Measures

Capacity of Measure	Thickness of Metal, Min		
	Bottom	Upper 1 ½ in. or 38 mm of Wall[a]	Remainder of Wall
Less than 0.4 ft^3	0.20 in	0.10 in	0.10 in
0.4 ft^3 to 1.5 ft^3 incl	0.20 in	0.20 in	0.12 in
Over 1.5 to 2.8 ft^3, incl	0.40 in	0.25 in	0.15 in
Over 2.8 to 4.0 ft^3, incl	0.50 in	0.30 in	0.20 in
Less than 11 L	5.0 mm	2.5 mm	0.10 mm
11 to 42 L, incl	5.0 mm	5.0 mm	3.0 mm
Over 42 to 80 L, incl	10.0 mm	6.4 mm	3.8 mm
Over 80 to 133 L, incl	13.0 mm	7.6 mm	5.0 mm

The added thickness in the upper portion of the wall may be obtained by placing a reinforcing band around the top of the measure.

5.5.2. *Grease* – A supply of water insoluble grease.

Note 3 – Petrolatum, vacuum grease, water pump grease, or chassis grease are examples of suitable material used to form a seal between the glass plate and measure.

5.5.3. *Thermometer* – A thermometer having a range of at least 50 to 90˚F (10 to 32℃) and that is readable to at least 1˚F (0.5℃).

5.5.4 *Balance* – A balance as described in Section 5.1.

5.6 Source of Heat – An oven of sufficient size, specifically built for drying, capable of maintaining a uniform temperature of 230±9˚F (110±5˚C) shall be used for drying. In addition, a gas burner or electric hot plate may be used. Microwave ovens are not permitted for drying unit weight or voids test samples.

6. SAMPLING

6.1 Field samples of aggregate shall be taken according to ITP 2. Field sample size shall conform to the minimum requirements in the Illinois Specification 201. Reduction of field samples shall be according to ITP 248.

7. SAMPLE

7.1 The size of sample shall be approximately 125 to 200 percent of the quantity required to fill the measure and shall be handled in a manner to avoid segregation. The test sample shall be dried to constant mass in an oven, specifically built for drying, set at and capable of maintaining a uniform temperature of 230±9˚F (110±5˚C). Constant mass is defined as the sample mass at which there has not been more than a 0.5 gram loss during 1 hour of drying. This should be verified occasionally.

The sample may also be dried to constant mass in a pan on an electric hot plate or gas burner. The technician shall continually attend the sample when drying on the electric hot plate or gas burner. Microwave ovens are not permitted for drying unit weight or voids test samples.

The electric hot plate or gas burner should be operated on a low-as-needed heat to prevent popping, crackling, and/or sizzling noise from the aggregate during drying. If these noises occur, the heat must be turned down and/or the sample must be constantly stirred during drying to prevent potential aggregate particle breakdown.

When more than on size of coarse aggregate is to be used in IDOT's mortar-voids design method for portland cement concrete mixtures, the void content shall be determined from a sample consisting of the coarse aggregate combination.

Note 4 – When testing Recycled Asphalt Pavement (RAP) samples shall be air dried to a constant mass.

8. CALIBRATION OF MEASURE

8.1 Measures shall be recalibrated at least once a year or whenever there is reason to question the accuracy of the calibration.

8.2 Place a thin layer of grease on the rim of the measure to prevent leakage of water from the measure.

8.3 Determine the mass of the plate glass and measure to the nearest 0.1 lb (0.05kg).

8.4 Fill the measure with water that is at room temperature and cover with the plate glass in such a way as to eliminate bubbles and excess water. Remove any water that may have overflowed onto the measure or plate glass.

8.5 Determine the mass of the water, plate glass and measure to the nearest 0.1 lb (0.05kg).

8.6 Measure the temperature of the water to the nearest 1˚F (0.5℃) and determine its density from Table 3, interpolating if necessary.

Table 3 – Density of Water

Temperature			
˚F	˚C	Lb/ft^3	Lg/m^3
60	15.6	62.366	999.01
65	18.3	62.336	998.54
70	21.1	62.301	997.97
(73.4)	(23.0)	(62.274)	(997.54)
75	23.9	62.261	997.32
80	26.7	62.216	996.59
85	29.4	62.166	995.83

8.7. Calculate the volume, *V*, of the measure. Alternatively, calculate the factor, *F*, for the measure.

$$V = \frac{B-C}{D} \qquad (1)$$

$$F = \frac{D}{B-C} \qquad (2)$$

where:

V = Volume of the measure, ft^3 (m$^{3)}$
B = Mass of the water, plate glass and measure, lb (kg)
C = Mass of the plate glass and measure, lb (kg)
D = Density of the water for the measured lb/ft^3 (kg/m^3), and
F = Factor for the measure, 1/ft^3 (1/m^3)

Note 5 – For the calculation of bulk density, the volume of the measure in acceptable metric units should be expressed in cubic meters, or the factor as l/m^3. However, for convenience the size of the measure may be expressed in liters (equal to m^3/1000).

ILLINOIS TEST PROCEDURE 19

BULK DENSITY ("UNIT WEIGHT") AND VOIDS IN AGGREAGATE

Effective Date: April 1, 2012
Revised Date: February 1, 2014

9. SELECTION OF PROCEDURE

9.1 The compact bulk density shall be determined by the rodding procedure for aggregates having a nominal maximum size of 1 1/2 in (37.5mm) or less, or by jigging procedure for aggregates have a nominal maximum size greater than 1 1/2im (37.5mm) and not exceeding 5in (125mm).

10. RODDING PROCEDURE

10.1 Fill the measure one-third full and level the surface with the fingers. Rod the layer of aggregate with 25 strokes of the tamping rod evenly distributed over the surface. Fill the measure two-thirds full and again level and rod as above. Finally, fill the measure to overflowing and rod again in the manner previously mentioned. Level the surface of the aggregate with the fingers or a straightedge in such a way that any slight projections of the larger pieces of the coarse aggregate approximately balance the larger voids in the surface below the top of the measure. The tamping rod may be used as a straightedge.

10.2 In rodding the first layer, do not allow the rod to strike the bottom of the measure forcibly. In rodding the second and third layers, use vigorous effort, but not more force than to cause the tamping rod to penetrate to the previous layer of aggregate.

Note 6 – In rodding the larger sizes of coarse aggregate, it may not be possible to penetrate the layer being consolidated, especially with angular aggregates. The intent of the procedure will be accomplished if vigorous effort is used.

10.3 Determine the mass of the measure plus contents, and the mass of the measure alone and record the values to the nearest 0.1lb (0.05kg).

11. JIGGING PROCEDURE

11.1 Fill the measure in three approximately equal layers as described in Section 10.1, compacting each layer by placing the measure on a firm base, such as a cement-concrete floor, raising the opposite sides alternately about 2in (50mm), and allowing the measure to drop in such a manner as to hit with a sharp, slapping blow. The aggregate particles, by this procedure, will arrange themselves in a densely compacted condition. Compact each layer by dropping the measure 50 times in the manner described, 25 times on each side. Level the surface of the aggregate with the fingers or a straightedge in such a way that any slight projections of the larger pieces of the coarse aggregate approximately balance the larger voids in the surface below the top of the measure.

11.2 Determine the mass of the measure plus contents, and the mass of the measure alone, and record the values to the nearest 0.1lb (0.05kg).

12. CALCULATION OF RESULTS

12.1 Unit Weight – Calculate the unit weight for the rodding or jigging procedure as follows:

$$M = \frac{G-T}{V} \qquad (3)$$

or,

$$M = G - T \; X \; F \qquad (4)$$

where:

M	=	bulk density of aggregate, lb/ft^3 (kg/m^3);
G	=	mass of aggregate plus the measure, lb (kg);
T	=	mass of the measure, lb (kg);
V	=	volume of measure, ft^3 (m^3); and
F	=	factor for measure, ft^3 (m^{-3}).

12.1.1. The bulk density determined by this method is for aggregate in an oven-dry condition. If the bulk density in terms of saturated surface-dry (SSD) condition is desired, use the exact procedure in this method, and then calculate the SSD bulk density by the following formula:

$$M_{SSD} = M\left[1 + \left(\frac{A}{100}\right)\right] \qquad (5)$$

where:

M_{SSD}	=	bulk density in SSD condition, lb/ft^3 (kg/m^3); and
A	=	absorption, percent, determined in accordance with ITP 84 or ITP 85.

12.2. *Void Content* – Calculate the void content in the aggregate using the unit weight determined by either the rodding or jigging procedures as follows:

$$\text{Voids \%} = \frac{100\,[(S \times W)-M]}{S \times W} \qquad (6)$$

where:

M	=	bulk density of aggregate, lb/ft^3 (kg/m^3);

S = bulk specific gravity (dry basis) as determined in accordance with ITP 84 or ITP 85; and

W = density of water, 62.3 lb/ft^3 (998 kg/m^3).

12.3 When more than one size of coarse aggregate is used in IDOT's mortar-voids design method for concrete mixtures, the void content is determined from a sample consisting of the coarse aggregate combination. To perform the calculation in Section 13.2, the bulk specific gravity (dry basis) shall be a weighted average of the coarse aggregate combination.

Example:

A Aggregate = 2.601 specific gravity / 40% blend
B Aggregate = 2.676 specific gravity / 60% blend
Blend Specific Gravity = (2.601 x 0.4) + 2.676 x 0.6) = 2.646

13. REPORT

13.1. Report the results for unit weight to the nearest 1 lb/ft^3 (1 kg/m^3). All rounding shall be according to ASTM E 29 (Illinois Modified).

13.1.1. Bulk density by rodding,

13.1.2. Bulk density by jigging,

13.2. Report the results for void content to the nearest one percent as follows:

13.2.1. Voids in aggregate compacted by rodding, percent,

13.2.2. Voids in aggregate compacted by jigging, percent

13.3 Indicate the procedure used.

14. PRECISION AND BIAS

14.1. The following estimates of precision for this method are based on results from the AASHTO Materials Reference laboratory (AMRL) Proficiency Sample Program, with testing conducted by this method and ASTM C 29. There are no significant differences between the two methods. The data are based on the analyses of more than 100 paired test results from 40 to 100 laboratories.

14.2 *Coarse Aggregate (bulk density):*

14.2.1. Single-Operator Precision – The single-operator standard deviation has been found to be (0.88 lb/ft^3 (14 kg/m^3) (1s). Therefore, results of two properly conducted tests by

the same operator on similar material should not differ by more than 2.50 lb/^{ft3} (40 kg/m^3) (d2s).

14.2.2. *Multilaboratory Precision* – The multilaboratory standard deviation has been found to be 1.87 lb/ft^3 (30 kb/m3) (1s). Therefore, results of two properly conducted tests from two different laboratories on similar material should not differ by more than 5.3 lb/ft^3 (85 kg/m^3) (d2s).

14.3. *Fine Aggregate (bulk density):*

14.3.1. *Single-Operator Precision* – The single-operator standard deviation has been found to be (0.88 lb/ft^3 (14 kg/m^3) (1s). Therefore, results of two properly conducted tests from the same operator on similar material should not differ by more than 40 kg/m^3 (2.5lb/ft^3) (d2s

14.3.2. *Multialaboratory Precision* – The multilaboratory standard deviation has been found to be 2.76 lb/ft^3 (44 kg/m^3) (1s). Therefore, results of two properly conducted tests from two different laboratories on similar material should not differ by more than 7.8 lb/ft^3 (125 kg/m^3) (d2s).

14.4 No precision data on void content are available. However as the void content in aggregate is calculated from bulk density and bulk specific gravity, the precision of the voids content reflects the precision of these measured parameters given in Sections 15.2 and 15.3 of this method and in ITP 84 and ITP 85.

14.5 *Bias* – The procedure in this test method for measuring bulk density and void content has no bias because the values for bulk density and void content can be defined only in terms of a test method.

This Page Reserved

ILLINOIS TEST PROCEDURE 27

SIEVE ANALYSIS OF FINE AND COARSE AGGREGATE

Effective Date: March 1, 2013

1. SCOPE

1.1 This procedure covers the determination of the particle size distribution of fine and coarse aggregates by sieving.

1.2 Some specifications for aggregates, which reference this method, contain grading requirements including both coarse and fine fractions. Instructions are included for sieve analysis of such aggregates.

1.3 The values stated in SI units are to be regarded as the standard. The values in parentheses are provided for information purposes only.

1.4 This standard does not purport to address all of the safety concerns, if any, associated with its use. It is the responsibility of the user of this procedure to establish appropriate safety and health practices and determine the applicability of regulatory limitations prior to use.

2. REFERENCED DOCUMENTS

2.1 Illinois Test Procedures (ITP):

- ITP 2, Sampling of Aggregates
- ITP 11, Materials Finer Than 75µm (No. 200) Sieve in Mineral Aggregates by Washing
- ITP 248, Reducing Samples of Aggregate to Testing Size

2.2 Illinois Specifications:

- Illinois Specification 201, Aggregate Gradation Sample Size Table

2.3 AASHTO Standards:

- M 231, Weighing Devices Used in the Testing of Materials

2.4 ASTM Standards:

- C 125, Standard Terminology Relating to Concrete and Concrete Aggregates
- E 11, Woven Wire Test Sieve Cloth and Test Sieves
- E 29 (Illinois Modified), Using Significant Digits in Test Data to Determine Conformance with Specifications

ILLINOIS TEST PROCEDURE 27

SIEVE ANALYSIS OF FINE AND COARSE AGGREGATE

Effective Date: March 1, 2013

3 TERMINOLOGY

3.1 *Definitions* – For definitions of terms used in this standard, refer to ASTM C 125.

4 SUMMARY OF METHOD

4.1 A sample of dry aggregate of known mass is separated through a series of sieves of progressively smaller openings for determination of particle size distribution.

5 SIGNIFICANCE AND USE

5.1 This procedure is used primarily to determine the grading of materials proposed for use as aggregates or being used as aggregates. The results are used to determine compliance of the particle size distribution with applicable specification requirements and to provide necessary data for control of the production of various aggregate products and mixtures containing aggregates. The data may also be useful in developing relationships concerning porosity and packing.

5.2 Accurate determination of material finer than the 75µm (No. 200) sieve cannot be achieved by used of this method alone. ITP 11 for material finer than the 75µm (No. 200) sieve by washing should be employed.

6 APPARATUS

6.1 *Balance* – The balance shall have sufficient capacity, be readable to 0.1 percent of the sample mass, or better, and conform to the requirements of AASHTO M 231.

6.2 *Sieves* – The sieve cloth shall be mounted on substantial frames constructed in a manner that will prevent loss of material during sieving. The sieve cloth and standard sieve frames shall conform to the requirements of ASTM E 11. Nonstandard sieve frames shall conform to requirements of ASTM E 11 as applicable.

When running Coarse Aggregate samples 12in (305mm) are required, if running Fine Aggregate samples 12in (305mm) or 8in (203mm) sieves are acceptable.

6.3 *Mechanical Sieve Shaker* – A mechanical sieving device, shall create motion of the sieves to cause the particles to bounce, tumble, or otherwise turn so as the present different orientations to the sieving surface. The sieving action shall be such that the criterion for adequacy of sieving described in Section 8.4 is met in a reasonable time period.

6.4 *Oven* – An oven of appropriate size capable of maintaining a uniform temperature of 110±5˚C (230±9˚F). The oven shall be specifically designed for drying.

In addition, a gas burner or electric hot plate may be used. Microwave ovens are not permitted for drying aggregate gradation samples.

7 SAMPLING

7.1 Field samples of aggregate shall be taken according to ITP 2. The field sample size shall meet the minimum requirements in the Illinois Specification 201.

7.2 Field samples of aggregate shall be reduced to test sample size before testing according to ITP 248.

Test sample size for gradation samples shall meet the minimum requirements in the Illinois Specification 201.

7.3 In the event that the amount of material finer than 75µm (No. 200) sieve is to be determined by ITP 11, proceed as follows: use the procedure described in Section 7.3.1 or 7.3.2, whichever is applicable.

7.3.1 Use the same test sample for testing by ITP 11 and by this method. First test the sample according to ITP 11 through the final drying operation, and then dry-sieve the sample as stipulated in Sections 8.2 through 8.6 of this method.

7.3.2 If the test sample is not to be tested by ITP 11, follow Section 8, “Procedure.”

8 PROCEDURE

8.1 If the test sample has not been subject to testing by ITP 11, the test sample shall be dried back to constant mass in an oven specifically designed for drying, set at and capable of maintaining a uniform temperature of 110±5˚C (230±9˚F). Constant mass is defined as the sample mass at which there has not been more than a 0.5 gram mass loss during 1 hour of drying. This should be verified occasionally.

The sample may also be dried to constant mass in a pan on an electric hot plate or gas burner. The technician shall continually attend the sample when drying on the electric hot plate or gas burner. Microwave ovens are not permitted for drying gradation samples.

The electric hot plate or gas burner should be operated on a low-as-needed heat to prevent popping, crackling, and/or sizzling noise from the aggregate during drying. If these noises occur, the heat must be turned down and/or the sample must be constantly stirred during drying to prevent potential aggregate particle breakdown.

After the test sample has been dried to constant mass and cooled down to room temperature, the sample shall have its mass determined to the nearest 1 gram for coarse aggregate and to the nearest 0.1 gram for fine aggregate. All balances or scales shall be tared before being used for determination of mass required by this test procedure. This procedure provides the "Total Dry Mass, g (TDM) of the original test sample. When testing Recycled Asphalt Pavement (RAP) samples shall be air dried to a constant mass.

8.2 A nested set of sieves (203mm [8 inch] or 305mm [12 inch]) shall be gathered and stacked. As the sieves are being stacked, they should be inspected for cracks, breaks, or any other problem which would exclude their continued use. The size of the sieves used shall conform to the gradation specifications of the aggregate tested. The 75µm (No. 200) sieve is required to be part of all nested sets when running a gradation test. It is also required that 203mm (8 inch) and 305mm (12 inch) round sieves use additional cutter sieves beyond the specified gradation sieves for all coarse aggregate gradations. Some cutter sieves may be required for fine aggregate gradations if overloading of individual sieves occurs. Gradations CA/CM 7 and 11 require the 16.0mm (5/8 inch), 9.5mm (3/8 inch), and 6.3mm (1/4 inch) sieves as cutter sieves, while the gradations CA/CM 13, 14, and 16 require the 6.3mm (1/4 inch) and the 2.38mm (No. 8) sieves. Cutter sieves for other gradations can be found in Illinois Specification 201.

The sample shall then be introduced into the nested set of sieves and placed in a mechanical shaker. The shaker shall impart a vertical, or lateral and vertical, motion to the nested set. This causes the aggregate particles to bounce and turn so as to present different particle orientations to the sieves. This allows every chance for the particle to pass a certain sized sieve.

The shaker shall be run for 7 minutes, controlled by an automatic shut-off timer. Seven (7) minutes of shaking shall be considered the standard unless reduced shaker efficiency can be demonstrated through finish hand-shaking as described in Section 8.4. Shaking time shall be increased if necessary to comply with the finish hand-shaking procedure in Section 8.4. Shaking time shall not exceed 10 minutes.

8.3 Extreme care shall be taken not to overload individual sieves or even approach the overload limits. An overload is defined as several layers of particles, one on top of the other, which do not permit the top layers of particles access to the sieve openings. Sample results which show overloading or a borderline situation are immediately

suspect. If samples continually overload a sieve or sieves, then future samples shall be run in the appropriate number of portions to prevent overloading, or additional cutter sieves shall be added to the nested set to correct the problem.

8.4 After mechanical shaking, all sieves shall be finished off by hand-shaking. When hand-shaking, the largest sieve that contains material shall be removed from the stack, visually inspected for overload, and inverted over an empty pan. While inverted, all particles shall be cleaned from the sieve. The material shall then be placed back on the same sieve and hand-shaken over an empty pan. Any amount of material that is considered to be an overload or to be approaching an overload shall be hand-shaken in a least two increments. Any appreciable amount of particles passing a sieve may indicate poor mechanical shaking or overloading. The finish hand-shaking described in the following paragraph shall then be initiated.

Continue sieving for a sufficient period and in such manner that, after completion, not more than 0.5 percent by mass of the total sample passes any sieve during 1 minute of continuous hand sieving performed as follows: Hold the individual sieve, provided with a snug-fitting pan and cover, in a slightly inclined position in one hand. Strike the side of the sieve sharply and with an upward motion against the heel of the other hand at a rate of about 150 times per minute, turn the sieve about one-sixth of a revolution at intervals of about 25 strokes. In determining sufficiency of sieving for sizes larger than 4.75mm (No. 4) sieve, limit the material on the sieve to a single layer of particles. If the size of the mounted testing sieves makes the described sieving motion impractical, use 203mm (8inch) diameter sieves to verify the sufficiency of sieving.

8.5 After hand-shaking, material shall be removed from the sieve. Particles shall not be forced through the sieves. The sieve shall be inverted and lightly tapped on the sides to facilitate removal for weighing. A dowel rod or putty knife may be used to gently remove wedged particles from all sieves down through the 2.00mm (No. 10). A soft brass-wired brush shall be used on the 1.18mm (No. 16) through the 425µm (No. 40) sieve. A soft china brush shall be used on the 300µm (No. 50) through the 75µm (No. 200) sieve. Any material that passed the sieve during hand-shaking shall be placed on the next smaller sieve. After use, all sieves shall be inspected for cracks, breaks, or any other problem which would exclude their continued use.

8.6 After hand-shaking and cleaning, the material retained on each sieve shall have its mass determined and the mass recorded. All determination of mass shall start with the largest sieve in the nested set and proceed down to the pan. Determination of mass shall be to the nearest 1 gram for coarse aggregate and to the nearest 0.1 gram for fine aggregate. The total mass of the material after sieving should check closely

with original mass of samples placed on the sieves. If the amounts differ by more than 0.3 percent, based on the original dry sample mass, the results should not be used for acceptance purposes.

9 CALCULATION

9.1 Calculation of test results shall follow the procedure described below:

Calculated the "Cumulative Mass Retained" for each sieve by adding its "Individual Mass Retained" and the "Individual Mass Retained" for each larger sieve in the nested set of sieves. Record the "Cumulative Mass Retained".

Calculated the "Cumulative Percent Retained" for each sieve by using the following formula and record it by rounding to the nearest 0.1 percent:

Cumulative % Retained = $\frac{CMR}{TDM} \times 100$

where CMR = Cumulative Mass Retained
and TDM = Total Dry Mass

Calculated the percent passing each sieve by using the following formula:

% = 100 – Cumulative % Retained

These results shall be recorded to the nearest 0.1 percent.

9.2 Calculate the fineness modulus, when required, by adding the total percentages of material in the sample that is coarser than each of the following sieves (cumulative percentages retained), and dividing the sum by 100; 150µm (No. 100), 300µm (No. 50), 600µm (No. 30), 1.18mm (No. 16), 2.36mm (No. 8), 4.75mm (No. 4), 9.5mm (3/8 in.), 19.0mm (¾ in.), 37.5mm (1 ½ in.), and larger, increasing the ratio of 2 to 1.

10 REPORT

10.1 Depending upon the form of the specifications for used of the material under test, the report shall include one of the following:

10.1.1 Total percentage of material passing each sieve, or

10.1.2 Total percentage of material retained on each sieve, or

10.1.3 Percentage of material retained between consecutive sieves.

10.2 All percent passing results except the washed minus 75µm (minus No. 200) and minus 75µm (minus No. 200) shall be reported on the gradation form as whole numbers. The washed minus 75µm (minus No. 200) and minus 75µm (minus No. 200) results shall be reported to the nearest 0.1 percent. Illinois Department of Transportation (IDOT) gradation forms or forms approved by IDOT shall be used. These forms shall be competed with all required information.

10.3 Rounding shall be according to ASTM E 29 (Illinois Modified).

10.4 For all sieves that are considered overloaded and split in more than one increment. An “S” next to the sieve must be notated on the worksheet.

11 COMPARISON PROCEDURE

11.1 All comparison testing shall be conducted in accordance with the most current version of the Illinois Department of Transportation Manual of Test Procedures for Materials (Appendix A7).

This Page Reserved

ILLINOIS TEST PROCEDURE 84

SPECIFIC GRAVITY AND ABSORPTION OF FINE AGGREGATE

Effective Date: March 1, 2013

1 SCOPE

1.1 This procedure covers the determination of bulk and apparent specific gravity, and absorption of fine aggregates

1.2 This method determines (after 15 to 19 hours in water) the bulk specific gravity and the apparent specific gravity, the bulk specific gravity on the basis of mass of saturated surface-dry aggregate, and the absorption.

1.3 The values stated are in SI units are to be regarded as the standard.

1.4 *This standard does not purport to address all of the safety concerns, if any, associated with its use. It is the responsibility of the user of this procedure to establish appropriate safety and health practices and determine the applicability of regulatory limitations prior to use.*

1.5 Gradations FA/FM 22 and FA/FM 04 shall be conducted in accordance with ITP 85.

2 REFERENCED DOCUMENTS

2.1 Illinois Test Procedures (ITP):

- ITP 2, Sampling of Aggregates
- ITP 19, bulk Density ("Unit Weight") and Voids in Aggregate
- ITP 85, Specific Gravity and Absorption of Coarse Aggregate
- ITP 248, Reducing Samples of Aggregate to Testing Size
- ITP 255, Total Evaporable Moisture Content of Aggregate by Drying

2.2 Illinois Specifications:

- Illinois Specification 201, Aggregate Gradation Sample Size Table

2.3 AASHTO Standards:

- M 231, Weighing Devices Used in the Testing of Materials

2.4 ASTM Standards:

- C 670, Standard Practice for Preparing Precision and Bias Statements for Test Methods for Construction Materials
- E 29 (Illinois Modified), Using Significant Digits in Test Data to Determine Conformance with Specifications

3 TERMINOLOGY

3.1 Definitions:

3.1.1 *absorption* – the increase in the mass of aggregate due to water in the pores of the material, but not including water adhering to the outside surface of the particles, expressed as a percentage of the dry mass. The aggregate is considered "dry" when it has been maintained at a temperature of 110±5˚C (230±9˚F) for sufficient time to remove all uncombined water by reaching a constant mass.

3.1.2 *specific gravity* – the ratio of the mass (or weight in air) of a unit volume of a material to the mass of the same volume of gas-free distilled water at stated temperatures. Values are dimensionless.

3.1.2.1 *apparent specific gravity* – the ratio of the weight in air of a unit volume of the impermeable portion of aggregate at a stated temperature to the weight in air of an equal volume of gas-free distilled water at a stated temperature.

3.1.2.2 *bulk specific gravity* – the ratio of the weight in air of a unit volume of aggregate (including the permeable and impermeable voids in the particles, but not including the voids between particles) at a stated temperature to the weight in air of an equal volume of gas-free distilled water at a stated temperature.

3.1.2.3 *bulk specific gravity (SSD)* – the ratio of the mass in air of a unit volume of aggregate, including the mass of water within the voids filled to the extent achieved by submerging in water for approximately 15 to 19 hours (but not including the voids between particles) at a stated temperature, compared to the weight in air of an equal volume of gas-free distilled water at a stated temperature.

ILLINOIS TEST PROCEDURE 84

SPECIFIC GRAVITY AND ABSORPTION OF FINE AGGREGATE

Effective Date: March 1, 2013

4 SIGNIFANCE AND USE

4.1 Bulk specific gravity is the characteristic generally used for calculation of the volume occupied by the aggregate in various mixtures containing aggregate including portland cement concrete, bituminous concrete, and other mixtures that are proportioned or analyzed on an absolute volume basis. Bulk specific gravity is also used in the computation of voids in aggregate in ITP 19. Bulk specific gravity determined on the saturated surface-dry basis is used if the aggregate is wet, that is, if its absorption has been satisfied. Conversely, the bulk specific gravity determined on the oven-dry basis is used for computations when the aggregate is dry or assumed to be dry.

4.2 Apparent specific gravity pertains to the relative density of the solid material making up the constituent particles not including the pore space within the particles that is accessible to water. This value is not widely used in construction aggregate technology.

4.3 Absorption values are used to calculate the change in the mass of an aggregate due to water absorbed in the pore spaces within the constituent particles, compared to the dry condition, when it is deemed that the aggregate has been in contact with water long enough to satisfy most of the absorption potential. The laboratory standard for absorption is that obtained after submerging dry aggregate for approximately 15 hours in water. Aggregates mined from below the water table may have a higher absorption when used, if not allowed to dry. Conversely, some aggregates when used may contain an amount of absorbed moisture less than the 15 to 19 hours soaked condition; For an aggregate that has been in contact with water and that has free moisture on the particle surfaces, the percentage of free moisture can be determined by deducting the absorption from the total moisture content determined by ITP 255 by drying.

5 APPARATUS

5.1 Balance – The balance shall have sufficient capacity, be readable to 0.1 percent of the sample mass, or better, and conform to the requirements of AASHTO M 231.

5.2 Sample Container – A solid bucket of approximately equal breadth and heights with a capacity of approximately 6000 cm^3 shall be used. The bucket shall be constructed in a way to prevent the trapping of air when the container is submerged.
When running Slag products, the bucket shall be manufactured of copper.

5.3 Mold – A metal mold in the form of a frustum of a cone with dimensions as follows: 40±3 mm inside diameter at the top, 90±3mm inside diameter at the bottom, and 75±3mm in height, with the metal having a minimum thickness of 0.8mm.

5.4 Tamper – A metal tamper having a mass of 340±15g and having a flat circular tamping face 25±3mm in diameter.

5.5 Oven – An oven of sufficient size, specifically built for drying, capable of maintaining a uniform temperature of 110±5˚C (230±9˚F). No other heat source for drying is permitted.

5.6 Water Tank – A watertight tank into which the sample and container are placed for complete immersion while suspended below the balance, equipped with an overflow outlet for maintaining a constant water level.

5.7 Suspended Apparatus – A nonabsorbent line of material (wire, fishing line, etc.) that suspends the sample container such that the entire handle of the sample container is below the surface of the water.

6 SAMPLING

6.1 Field samples of fine aggregate shall be taken according to ITP 2. Field sample size shall meet the minimum requirements in the Illinois Specification 201.

7 PREPARATION OF TEST SPECIMEN

7.1 Obtain a test sample of approximately 4000 grams of fine aggregate from the field sample by procedures described in ITP 248.

7.1.1 The sample shall not be dried. Cover the sample with water and permit to stand 15 to 19 hours.

7.2 Decant excess water with care to avoid loss of fines, spread the sample on a flat, nonabsorbent surface exposed to a gentle current (lowest setting if using a fan) of warm air, and stir frequently to assure uniform drying. No mechanical aids shall be used. Hand-stirring or diagonally lifting a nonabsorbent sheet corner-to-corner may be used. Care shall be exercised not to lose any of the test sample. As the material begins to dry sufficiently, it may be necessary to work it with the hands in a rubbing

motion to break up any conglomerations, lumps, or balls of material that develop. Continue this operation until the test specimen approaches a free-flowing condition. Follow the procedure in Section 7.2.1 to determine whether or not surface moisture is present on the fine aggregate particles. It is intended that the first trial of the cone test will be made with some surface water in the specimen. Continue drying with constant stirring, and if necessary, work the material with a hand-rubbing motion, and test at frequent intervals until the test indicates that the specimen has reached a surface-dry condition. If the first trial of the surface moisture test indicates that moisture is not present on the surface, it has been dried past the saturated surface-dry condition. In this case, thoroughly remoisten the fine aggregate and permit the specimen to stand in a covered container for 30 minutes. Then resume the process of drying and testing at frequent intervals for the onset of the surface-dry condition.

7.2.1 Place the mold firmly on a smooth, nonabsorbent surface with the large diameter down. Place a portion of the partially dried fine aggregate loosely in the mold by filling until overflow occurs. Hold the mold down tightly and remove any loose fine aggregate from around the base of the mold. Lightly tamp the fine aggregate into the mold with 25 light drops of the tamper. Each drop should start about 5mm (0.2 in.) above the top surface of the fine aggregate. Permit the tamper to fall freely under gravitational attraction on each drop. Adjust the starting height to the new surface elevation after each drop and distribute the drops over the surface. Lift the mold vertically. If surface moisture is still present, the fine aggregate will retain the molded shape. For natural sands, surface dry condition is reached when all the material on the sides slumps off leaving a nickel-sized plateau in the middle. For all other manufactured sands, surface dry condition is reached when at least ¼ of a side of the molded cone shape slumps off.

8 PROCEDURE

8.1 Make and record all mass determinations to 0.1g.

8.2 Obtain two 1000.0 gram test samples from the saturated surface-dry fine aggregate. This mass is the “Wet Mass.”

Immediately introduce one of the test samples into the sample container and determine its mass in water at 23.0±1.7˚C (73.4±3˚F) using the specified balance or scale. Take care to remove all entrapped air before weighing by shaking and/or stirring the test sample. Let the fines settle out before submerging. Discard sample after determining its mass in water. this determination of mass establishes the “Submerged Mass.”

8.3 Dry the second 1000.0 gram sample immediately to constant mass in the specified oven at 110±5˚C (230±9˚F). After the test sample has been dried to constant mass and cooled to room temperature determine the mass to the nearest 0.1 gram. Constant mass is defined as the sample mass at which there has not been more the 0.5 gram mass loss during 1 hour of drying. This should be verified occasionally. This determination of mass establishes the "Oven-Dry Mass."

9 BULK SPECIFIC GRAVITY

9.1 9.1 BULK SPECIFIC GRAVITY (OVEN-DRY)

Calculate the bulk specific gravity, as follows:

$$Bulk\ sp\ gr = \frac{\mathrm{A}}{\mathrm{B} - \mathrm{C}}$$

where A = oven-dry mass, g,
B = wet mass, g,
and C = submerged mass, g.

10 BULK SPECIFIC GRAVITY (SATURATED SURFACE-DRY BASIS)

10.1 BULK SPECIFIC GRAVITY (SATURATED SURFACE-DRY BASIS)

Calculate the bulk specific gravity, on the basis of weight of saturated surface-dry aggregate as follows:

$$Bulk\ sp\ gr\ (saturated\ surface - dry) = \frac{\mathrm{B}}{\mathrm{B} - \mathrm{C}}$$

where B = wet mass, g,
and C = submerged mass, g.

11 APPARENT SPECIFIC GRAVITY

11.1 APPARENT SPECIFIC GRAVITY

Calculate the apparent specific gravity, as follows:

$$Apparent\ sp\ gr = \frac{\mathrm{A}}{\mathrm{A} - \mathrm{C}}$$

where A = oven-dry mass, g,
and C = submerged mass, g.

12 ABSORPTION

12.1 ABSORPTION

Calculate the percentage of absorption as follows:

$$Absorption, percent = \frac{B - A}{A} \times 100$$

where A = oven-dry, g,
and B = wet mass, g.

13 REPORT

13.1 Report all specific gravity results to the nearest 0.001 and all absorption results to the nearest 0.1 percent.

All rounding shall be according to ASTM E 29 (Illinois Modified).

This Page Reserved

ILLINOIS TEST PROCEDURE 85

SPECIFIC GRAVITY AND ABSORPTION OF COARSE AGGREGATE

Effective Date: March 1, 2013

1 SCOPE

1.1 This procedure covers the determination of specific gravity and absorption of coarse aggregate. The specific gravity may be expressed as bulk specific gravity, bulk specific gravity (saturated-surface-dry (SSD)), or apparent specific gravity. The bulk specific gravity (SSD) and absorption are based on aggregate after 15 to 19 hours soaking in water. This method is not intended to be used with lightweight aggregates.

1.2 The values stated in SI units are to be regarded as the standard.

1.3 *This standard does not purport to address all of the safety concerns, if any, associated with its use. It is the responsibility of the user of this procedure to establish appropriate safety and health practices and determine the applicability of regulatory limitations prior to use.*

2 REFERENCED DOCUMENTS

2.1 Illinois Test Procedures (ITP):

- ITP 2, Sampling of Aggregates
- ITP 11, Materials Finer Than 75µm (No. 200) Sieve in Mineral Aggregates by Washing
- ITP 19, Bulk Density (“Unit weight”) and Voids in Aggregate
- ITP 248, Reducing Samples of Aggregate to Testing Size
- ITP 255, Total Evaporable Moisture Content of Aggregate by Drying

2.2 Illinois Specifications:

- Illinois Specification 201, Aggregate Gradation Sample Size Table

2.3 *AASHTO Standards:*

- M 231, Weighing Devices Used in the Testing of Materials

2.4 *ASTM Standard:*

- E 11, Woven Wire Test Sieve Cloth and Test Sieves
- E 29 (Illinois Modified), Using Significant Digits in Test Data to Determine Conformance with Specifications
- C 670, Standard Practice for Preparing Precision and Bias Statements for Test Methods for Construction Materials.

ILLINOIS TEST PROCEDURE 85

SPECIFIC GRAVITY AND ABSORPTION OF COARSE AGGREGATE

Effective Date: March 1, 2013

3 TERMINOLOGY

3.1 *Definitions:*

3.1.1 *Absorption* – the increase in the mass of aggregate due to water in the pores of the materials but not including water adhering to the outside surface of the particles, expressed as a percentage of the dry mass. The aggregate is considered "dry" when it has been maintained at a temperature of 110± 5℃ for sufficient time to remove all uncombined water by reaching a constant mass.

3.1.2 *Specify Gravity* – the ratio of the mass (or weight in air) of a unit volume of a material to the mass of the same volume of gas-free distilled water at stated temperatures. Values are dimensionless.

3.1.2.1 *Apparent Specific Gravity* –the ratio of the weight in air of a unit volume of the impermeable portion of aggregate at a stated temperature to the weight in air of an equal volume of gas-free distilled water at a stated temperature.

3.1.2.2 *Bulk Specific Gravity* – the ratio of the weight in air of a unit volume of aggregate (including the permeable and impermeable voids in the particles, but not including the voids between particles) at a stated temperature to the weight in air of an equal volume of gas-free distilled water at a stated temperature.

3.1.2.3 *Bulk Specific Gravity (SSD)* – the ratio of the mass in air of a unit volume of aggregate, including the mass of water within the voids filed to the extent achieved by submerging in water for approximately 15 to 19 hours (but not including the voids between particles) at a stated temperature, compared to the weight in air of an equal volume of gas-free distilled water at a stated temperature.

4 SIGINIFICANCE AND USE

4.1 Bulk specific gravity is the characteristic generally used for calculation of the volume occupied by the aggregate in various mixtures containing aggregate, including portland cement concrete, bituminous concrete, and other mixtures that are proportioned or analyzed on an absolute volume basis. Bulk specific gravity is also used in the computation of voids in aggregate in ITP 19. Bulk specific gravity (SSD) is used if the aggregate s wet, that is, if its absorption has been satisfied. Conversely, the bulk specific gravity (oven-dry) is used for computations when the aggregate is dry or assumed to be dry.

4.2 Apparent specific gravity pertains to the relative density of the solid material making up the constituent particles not including the pore space within the particles which is accessible to water.

4.3 Absorption values are used to calculate the change in the mass of an aggregate due to water absorbed in the pore spaces within the constituent particles, compared to the dry condition, when it is deemed that the aggregate has been in contact with water long enough to satisfy most of the absorption potential. The laboratory standard for absorption is that obtained after submerging dry aggregate for approximately 15 to 19 hours in water. Aggregates mined form below the water table may have a higher absorption when used, if not allowed to dry. Conversely, some aggregates when used may contain an amount of absorbed moisture less than the 15-hour soaked condition. For an aggregate that has been in contact with water and that has free moisture on the particle surfaces, the percentage of free moisture can be determined by deducting the absorption form the total moisture content determined by ITP 255.

4.4 The general procedures described in this method are suitable for determining the absorption of aggregates that have had conditioning other than the 15 to 19 hour soak, such as boiling water or vacuum saturation. The values obtained for absorption by other methods will be different than the values obtained by the prescribed 15 to 19 hour soak, as will the bulk specific gravity (SSD).

5 APPARATUS

5.1 *Balance* – The balance shall have sufficient capacity, be readable to 0.1 percent of the sample mass, or better, and conform to the requirements of AASHTO M 231. For accurate SSD determination; a metal weigh pan should be utilized.

5.2 *Sample Container* – A solid bucket of approximately equal breadth and height with a capacity of approximately 6000cm^3, or a wire mesh basket with 2.0mm (No. 10) mesh or smaller, may be used. The bucket/basket shall be constructed in a way to prevent the trapping of air when the container is submerged. If using a bucket when running Slag products the bucket shall be manufactured of copper.

5.3 *Water Tank* – A watertight tank into which the sample and container are placed for complete immersion while suspended below the balance equipped with an overflow outlet for maintaining a constant water level.

5.4 *Suspended Apparatus* – A nonabsorbent line of material (wire, fishing line, etc.) that suspends the sample container such that the entire handle of the sample container is below the surface of the water.

5.5 *Sieves* – A 2.36mm (No. 8) sieve, conforming to ASTM E 11..

5.6 *Oven* – An oven of sufficient size, specifically built for drying, capable of maintaining a uniform temperature of 110±5˚C (230±9˚F). No other heat source for drying is permitted.

ILLINOIS TEST PROCEDURE 85

SPECIFIC GRAVITY AND ABSORPTION OF COARSE AGGREGATE

Effective Date: March 1, 2013

6 SAMPLING

6.1 Field samples of coarse aggregate shall be taken according to ITP 2. Field sample size shall meet the minimum requirements in the Illinois Specification 201.

6.2 Thoroughly mix the sample of aggregate and reduce it to the approximate quantity needed using the applicable procedure in ITP 248. Reject all material passing a 2.36mm (No. 8) sieve by dry sieving. Steel and ACBF Slag shall be washed and dried prior to testing.

6.3 The minimum mass of test sample to be used is given below. When testing gradations that are two large to fit in the sample container, the sample may be split into multiple samples. If multiple samples are tested the weights will be combined prior to calculations.

Gradation	Minimum Mass of Test Sample, kg (lb)
CA/CM 01	9.3 (20.5)
CA/CM 02 & 03	7.5 (16.5)
CA/CM 04 & 05	4.5 (9.9)
CA/CM 06 - 09	3.5 (7.7)
CA/CM 10 - 12	2.5 (5.5)
CA/CM 13 - 20	1.5 (3.3)

7 PROCEDURE

7.1 When running slag products this method is further modified to require that all samples be washed, dried, and weighed (for Original Weight) prior to testing using ITP 11. Subsequently immerse the aggregate in water at room temperature for period of 15 to 19 hours.

7.2 Decant the water off the test sample. Thoroughly wash the sample in cool water to remove dust or other coatings from the surface. Decant off excess water. Place sample on large, absorbent cloth. Roll particles with a clean, dry towel until all visible signs of water are removed. Take care to avoid evaporation of water from aggregate pores during the operation of surface drying. Determine the mass of all test samples, while in the saturated surface-dry condition, to the nearest 1 gram on a specified balance or scale.

To check for an accurate surface dry condition use the following method:

After obtaining the surface dry weight introduce the test sample into the sample basket/bucket, do not immerse. Then immediately check the bottom of the weight pan for the presence of water spots. If there are no spots present; the sample is too dry and must be re-soaked for a minimum of 30 minutes. Then resume the process of drying the test sample to surface dry condition.

If there is enough water present for the spots to run or streak the bottom of the weigh pan, then the sample is too wet and must be spread back out on the absorbent cloth and continue drying to obtain the surface dry condition.

7.3 After determining the mass, immediately place the saturated-surface-dry test sample in the sample container and determine its mass in water at 23.0± 1.7°C (73.4±3°F), having a density of 997± 2 kg/m^3. Take care to remove all entrapped air before determining the mass by shaking the container while immersed.

7.4 Dry the test sample to a constant mass in a specified oven at a temperature of 110±5˚C (230±9˚F). After the test sample has been dried to constant mass and cooled to room temperature determine the mass to the nearest 1 gram. Constant mass is defined as the sample mass at which there has not been more than 0.5 gram mass loss during 1 hour of drying. This should be verified occasionally.

8 CALCULATIONS

8.1 *Specific Gravity*:

8.1.1 *Bulk Specific Gravity* – Calculate the bulk specific gravity, as follows:

Bulk sp gr = $A/(B-C)$ *(1)*

where:

A = Mass of oven-dry test sample in air, g:
B = Mass of saturated-surface-dry test sample in air, g; and
C = Mass of saturated test sample in water, g.

8.1.2 *Bulk Specific Gravity* (Saturated-Surface-Dry) – Calculate the bulk specific gravity, as follows:

Bulk sp gr (saturated-surface-dry) = $B/(B-C)$ *(2)*

8.1.3 Apparent Specific Gravity – Calculate the apparent specific gravity, as follows:

Apparent sp gr = $A/(A-C)$ *(3)*

8.2 Absorption – Calculate the percentage of absorption, as follows:

Absorption, percent = $[(B - A) /A] \times 100$ *(5)*

ILLINOIS TEST PROCEDURE 85

SPECIFIC GRAVITY AND ABSORPTION OF COARSE AGGREGATE

Effective Date: March 1, 2013

9 REPORT

9.1 Report all specific gravities to the nearest 0.001.

All rounding shall be according to ASTM E 29 (Illinois Modified).

9.2 Report the absorption result to the nearest 0.1 percent.

Illinois Test Procedure 202
Leachate Determination in Crushed Slag Samples

Effective Date: May 1, 2007

1.0 SAMPLING PROCEDURE

The following sampling method shall be used for obtaining samples of air-cooled blast furnace slag for leachate tests.

1.1 Sampling. The material to be shipped should be sampled as the stockpile is being built. Each sample shall be taken in random increments over each 1500 metric tons stockpiled.

1.2 Obtaining the Sample After the Stockpile is Built. The sample shall be taken by shovel. The sample shall be selected randomly from both the exterior and interior of the stockpile. The producer must use the services of heavy equipment for the excavation of interior material.

1.3 Sample Size and Sample Reduction. The field sample should be 35 to 45 kg (80 to 100 lbs.) in mass. From this field sample, a test sample of 9 to 11 kg (20 to 25 lbs.) shall be quartered or mechanically split as detailed in AASHTO T 248 (Illinois Modified).

1.4 Sampling Frequency. The sampling frequency shall be a minimum of one sample per 1500 metric tons of material with a five-sample minimum per stockpile.

1.5 Documentation. Stockpile location and test results shall be maintained at the plant and shall be available to the Illinois Department of Transportation.

2.0 SULFUR LEACHATE TEST

The test procedure involves soaking the slag material in water for a specified period of time and observing the color of the water. A greenish-yellow coloration indicates a problem. The smell of H2S usually accompanies the observation of colored water.

2.1 Required Test Equipment

The following equipment is needed to perform the test:

2.1.1 One 20-liter bucket for soaking the sample

2.1.2 Filter paper for filtering the water

2.1.3 One funnel through which to filter the water

2.1.4 One clear glass container for observing the water

2.1.5 The rock color chart used for color comparisons (distributed by the Geological Society of America)

2.2 Test Procedure

The test procedure is as follows:

2.2.1 Prepare a test sample of approximately 9 to 11 kg (20 to 25 lbs.) from a field sample of approximately 45 kg (100 lbs.).

2.2.2 The test sample should then be rinsed over a 4.75-mm (No. 4) sieve to remove any fines that may be clinging to the larger particles. If the material to be tested is a densely graded material, eliminate this step.

2.2.3 Next, place the test sample in a bucket and fill the bucket with water until the sample is covered by at least 12.5 mm (1/2 inch) of water. Allow the sample to soak for 24 hours.

2.2.4 After soaking for 24 hours, thoroughly mix the water and collect a water sample of approximately 100 mL.

2.2.5 Filter the water sample to remove any suspended solids which may interfere with the color observations.

(a) If the color of the filtered water is equal to or darker than the moderate greenish-yellow color from the rock chart (HUE 10 Y), this material fails.

(b) If the water appears clear, allow the sample to soak another 24 hours and repeat steps 2.2.4 and 2.2.5. If after 48 hours no color appears, the material is assumed to have aged long enough to eliminate any leachate problems, and the sample is acceptable.

3.0 ACCEPTANCE OF MATERIAL

Acceptance of material is on a stockpile-by-stockpile basis. A stockpile is acceptable and may be shipped if its failure rate is 10 percent or less. The number of samples used to determine its failure rate shall be in accordance with the sample frequency described in Paragraph 1.4 of this procedure.

Note: This procedure is referenced in IDOT Policy Memorandum “Crushed Slag Producer Certification and Self Testing Program.”

ILLINOIS TEST PROCEDURE 248

REDUCING SAMPLES OF AGGREGATE TO TESTING SIZE

Effective: June 1, 2012

1. SCOPE

1.1 This procedure covers the reduction of large samples of aggregate to the appropriate size for testing, employing techniques that are intended to minimize variations in measured characteristics between the test samples so selected and the large sample.

1.2 The values stated in SI units are to be regarded as the standard.

1.3 This standard does not purport to address all of the safety concerns, if any, associated with its use. It is the responsibility of the user of this procedure to establish appropriate safety and health practices and determine the applicability of regulatory limitations prior to use.

2. REFERENCED DOCUMENTS

2.1 Illinois Test Procedures (ITP):

- ITP 2, Sampling of Aggregates
- ITP 11, Materials Finer Than 75µm (No. 200) Sieve in Mineral Aggregates by Washing
- ITP 84, Specific Gravity and Absorption of Fine Aggregate

2.2 ASTM Standards:

- *C 125, Standard Terminology Relating to Concrete and Concrete Aggregates*

3. TERMINOLOGY

3.1 *definitions* – the terms used in this standard are defined in ASTM C 125.

4. SIGNIFICANCE AND USE

4.1 Specifications for aggregates require sampling portions of the material for testing. Other factors being equal, larger samples will tend to be more representative of the total supply. The methods described in this standard provide for reducing the large sample obtained in the field or produced in the laboratory to a convenient size for conducting a number of tests to describe the material and measure its quality. These methods are conducted in such a manner that the smaller test sample portion will be representative of the larger sample and, thus, of the total supply. The individual test methods provide for minimum masses of material to be tested.

4.2 Under certain circumstances, reduction in size of the large sample prior to testing is not recommended. Substantial differences between the selected test samples sometimes cannot be avoided, as for example, in the case of an aggregate having relatively few large-sized particles in the sample. The laws of chance dictate that these few particles may be unequally distributed among the reduced-size test samples. Similarly, if the test sample is being examined for certain contaminants occurring as a few discrete fragments in only small percentages, caution should be used in interpreting results from the reduced-size test sample. Chance inclusion or exclusion of only one or two particles in the selected test sample may importantly influence interpretation of the characteristics of the original sample. In these cases, the entire original sample should be tested.

4.3 Failure to carefully follow the procedures in these methods could result in providing a non-representative sample to be used in subsequent testing. Selection during splitting of an exact, predetermined mass for the sample is not permitted.

5. SELECTION OF METHOD

5.1 *Fine Aggregate* – The preferred splitting method for fine aggregate shall be a fine aggregate mechanical splitter (Method A). However, quartering (Method B) and miniature stockpile sampling (Method C) may be used.

5.1.1 If the use of Method B or Method C is desired, and the sample does not have free moisture on the particle surfaces, the sample may be moistened to achieve this condition, thoroughly mixed, and then the sample reduction performed.

Note 1 – As a quick approximation of free moisture; the fine aggregate will retain its shape when molded in the hand, it may be considered to be wetter than saturated-surface-dry.

5.1.2 If the use of Method A is desired and the sample has free moisture on the particle surfaces, the entire sample may be dried to at least the surface-dry condition, using temperatures that do not exceed those specified for any of the tests contemplated, and then the sample reduction performed. Alternatively, if the moist sample is very large, a preliminary split may be made using a mechanical splitter having wide chute openings 37.5mm (1 ½ in.) or more to reduce the sample to not less than 5000g. The portion so obtained is then dried, and reduction to test sample size is completed using Method A.

5.2 *Coarse Aggregate and Mixtures of Coarse and Fine Aggregate* – The required splitting method for coarse aggregate and mixtures of coarse and fine aggregate shall be a coarse aggregate mechanical splitter (Method A). However, quartering (Method B) may be used for coarse aggregate moisture tests to proportion Portland cement concrete, cement aggregate mixture II, and controlled low-strength material mixtures.

6. SAMPLING

6.1 Field samples of aggregate shall be taken according to ITP 2.

METHOD A – MECHANICAL SPLITTER

7. APPARATUS

7.1 *Sample Splitter* – Sample splitters shall have an even number of equal width chutes, but not less than a total of eight for coarse aggregate, or 12 for fine aggregate, which discharge alternatively to each side of the splitter. For coarse aggregate and mixed aggregate the minimum width of the individual chutes shall be approximately 50 percent larger than the largest particles in the sample to be split (Note 2). For dry fine aggregate in which the entire sample will pass the 9.5mm (3/8 in.) sieve, the minimum width of the individual chutes shall be at least 50 percent larger than the largest particles in the sample and the maximum width shall be 19mm (3/4 in.). The splitter shall be equipped with two receptacles to hold the two halves of the sample following splitting. It shall also be equipped with a hopper or straight-edged pan, which has a width equal to or slightly less than the overall width of the assembly of chutes, by which the sample may be fed at a controlled rate to the chutes. The splitter and accessory equipment shall be so designed that the sample will flow smoothly without restriction or loss of material (see Figure 1).

ILLINOIS TEST PROCEDURE 248

REDUCING SAMPLES OF AGGREGATE TO TESTING SIZE

Effective: June 1, 2012

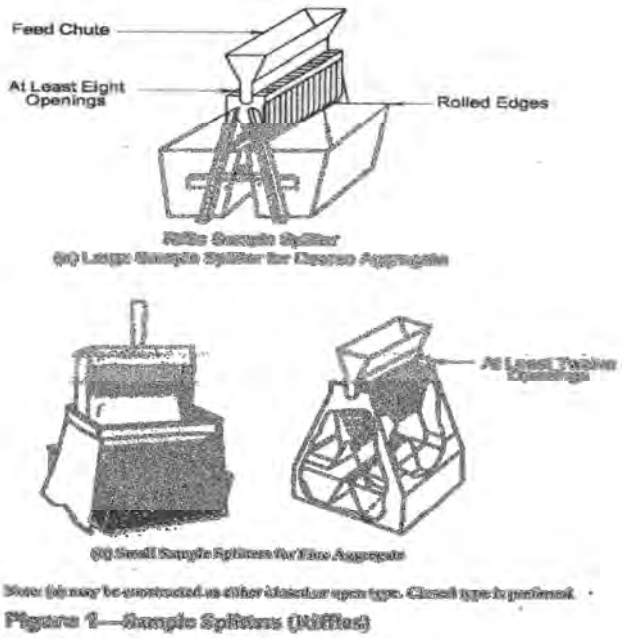

Note 2 – Mechanical splitters are commonly available in sizes adequate for coarse aggregate having the largest particles not larger than 37.5mm (1 ½ in.).

8. PROCEDURE

8.1 Place the original sample in the hopper or pan and uniformly distribute it from edge to edge, so that when it is introduced in the chutes, approximately equal amounts will flow through each chute. The rate at which the sample is introduced shall be such as to allow free flowing through the chutes into the receptacles below. Reintroduce the portion of the sample in one of the receptacles into the splitter as many times as necessary to reduce the sample to the size specified for the intended test. The portion of the material collected in the other receptacle may be reserved for reduction in size for other tests.

On the final split, the mass of the two halves (after splitting) shall be within ±10 percent of each other. This is determined by adding 10 percent of the mass of the small split to the mass of the smaller split; the larger split cannot exceed this calculated mass. If it does, both split halves shall be recombined and split until the mass comparison requirement is met.

ILLINOIS TEST PROCEDURE 248

REDUCING SAMPLES OF AGGREGATE TO TESTING SIZE

Effective: June 1, 2012

METHOD B – QUARTERING

9. APPARATUS

9.1 Apparatus shall consist of a straight-edge; straight-edged scoop, shovel or trowel; a broom or brush; and a canvas blanket or tear-resistant tarp approximately 2 by 2.5m (6 by 8 ft.).

10. PROCEDURE

10.1 Use either the procedure described in Section 10.1.1 or 10.1.2, or a combination of both.

10.1.1 Mix the material thoroughly on a hard, clean, level surface by turning the entire sample over four times using the shovel. Each shovel full shall be deposited on top of the preceding one. This procedure shall be done three times, resulting in the formation of a small conical pile. Carefully flatten the conical pile to a uniform thickness and diameter by pressing down the apex with a shovel or trowel so that each quarter sector of the resulting pile will contain the material originally in it. The diameter should be approximately four to eight times the thickness. Divide the flattened mass into four equal quarters with a shovel or trowel and remove two diagonally opposite quarters, including all fine material, and brush the cleared spaces clean. The two unused quarters may be set aside for later use or testing, if desired. Successively mix and quarter the remaining material until the sample is reduced to the desired size (see Figure 2).

Both halves of the final split shall meet the 10 percent comparison requirement in 8.1 herein.

10.1.2 As an alternative to the procedure in Section 10.1.1, the field sample may be placed on a canvas blanket. Mixing may be accomplished by the shovel method listed in 10.1.1 herein or by alternately lifting each corner of the canvas and pulling over the sample diagonally toward the opposite corner. This causes the material to be rolled and mixed. The material shall then be flattened and divided as required in 10.1.1. (see Figure 3) Both halves of the final split shall meet the 10 percent comparison requirement in 8.1 herein.

REDUCING SAMPLES OF AGGREGATE TO TESTING SIZE

Effective: June 1, 2012

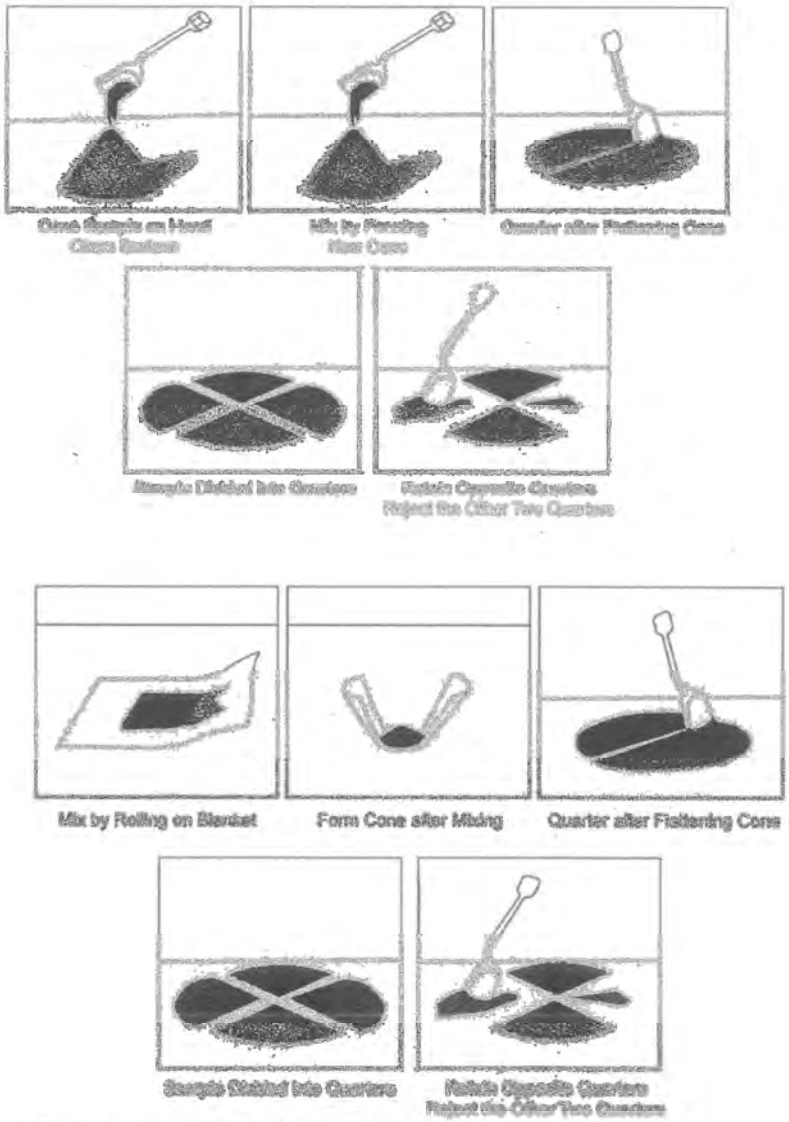

Figure 3—Quartering on a Canvas Blanket or Tear-Resistant Tarp

METHOD C – MINIATURE STOCKPILE SAMPLING (DAMP FINE AGGREGATE ONLY)

11. APPARATUS

11.1 Apparatus shall consist of a straight-edge; straight-edged scoop, shovel, or trowel for mixing the aggregate; and either a small thief, small scoop, or spoon for sampling.

12. PROCEDURE

12.1 Mix the material thoroughly on a hard, clean, level surface as required in 10.1.1 or 10.1.2.

The test sample shall be obtained by selecting at least five increments in a random "X" pattern over the resultant miniature sample pad using a sampling thief, small scoop, or spoon. A sufficient number of increments shall be obtained to provide a test sample slightly larger than the minimum test sample size when dried to a constant mass. (see Figure 4)

For all samples from which a state monitor split will also be obtained, the number of increments shall be doubled to provide a sample twice the minimum required test size. This material shall then be dried to constant mass as specified in the current ITP 11 and split in a fine aggregate mechanical splitter according to Method A – Mechanical Splitter. Alternately, the material may also be quartered according to Method B – Quartering.

Both halves of the final split shall meet the 10 percent comparison requirement in 8.1 herein.

Figure 4 – Miniature Stockpile Method on a canvas blanket or tear resistant tarp.

This Page Reserved

ILLINOIS TEST PROCEDURE 255

TOTAL EVAPORABLE MOISTURE CONTENT OF AGGREGATE BY DRYING

Effective Date: March 1, 2013

1 SCOPE

1.1 This test procedure covers the determination of the percentage of evaporable moisture in a sample of aggregate by drying both surface moisture and moisture in the pores of the aggregate. Some aggregate may contain water that is chemically combined with the minerals in the aggregate. Such water is not evaporable and is not included in the percentage determined by this test method. Aggregate moisture content may be run on a gradation sample prior to gradation testing or on a separate test sample.

1.2 The values stated in SI units are to be regarded as the standard. The values in parentheses are provided for information only.

1.3 This standard does not purport to address all of the safety concerns, if any, associated with its use. It is the responsibility of the user of this procedure to establish appropriate safety and health practices and determine the applicability of regulatory limitations prior to use.

2 REFERENCED DOCUMENTS

2.1 Illinois Test Procedures (ITP):

- ITP 2, Sampling of Aggregates
- ITP 84, Specific Gravity and Absorption of Fine Aggregate
- ITP 85, Specific Gravity and Absorption of Coarse Aggregate
- ITP 248, Reducing Samples of Aggregate to Testing Size

2.2 Illinois Specifications:

- Illinois Specification 201, Aggregate Gradation Samples Size Table

2.3 AASHTO Standards:

- M 231, Weighing Devices Used in the Testing of Materials

2.4 ASTM Standards:

- C 125, Standard Terminology Relating to Concrete and Concrete Aggregates
- E 29 (Illinois Modified), Using Significant Digits in Test Data to Determine Conformance with Specifications

3 TERMINOLOGY

3.1 Definitions:

3.2 For definitions of terms used in this test method, refer to ASTM C 125.

4 SIGNIFICANCE AND USE

4.1 This test method is sufficiently accurate for usual purposes such as adjusting batch quantities of ingredients for concrete. It will generally measure the moisture in the test sample more reliably than the sample can be made to represent the aggregate supply. In rare cases where aggregate itself is altered by heat, or where more refined measurement is required, the test should be conducted using a ventilated, controlled-temperature oven.

4.2 Large particles of coarse aggregate, especially those larger than 50mm (2 in.), will require greater time for the moisture to travel from the interior of the particle to the surface. The user of this test method should determine by trial if rapid drying methods provide sufficient accuracy for the intended use when drying large-size particles.

5 APPARATUS

5.1 *Balance* – The balance shall have sufficient capacity, be readable to 0.1 percent of the sample mass, or better, and conform to the requirements of AASHTO M 231.

5.2 *Source of Heat* – A ventilated oven capable of maintaining the temperature surrounding the sample at 110±5˚C (230±9˚F). The oven shall be specifically designed for drying.

5.2.1 Where close control of the temperature is not required (see Section 4.1), other suitable sources of heat may be used such as an electric or gas hot plate, electric heat lamps, or a ventilated microwave oven. A microwave oven or an electric or gas hot plate may be used only when drying a non-gradation test sample.

5.3 *Sample Container* – A container not affected by the heat, and of sufficient volume to contain the sample without danger of spilling, and of such shape that the depth of sample will not exceed one-fifth of the least lateral dimension.

Note 1 – Except for testing large samples, an ordinary frying pan is suitable for use with a hot plate, or any shallow flat-bottomed metal pan.

5.4 *Stirrer* – A metal spoon or spatula of convenient size.

6 SAMPLE

6.1 Sampling shall generally be accomplished in accordance with ITP 2, except the sample size shall be as stated in Illinois Specification 201.

6.2 Field samples of aggregate shall be reduced to test sample size before testing according to ITP 248.

Test samples shall be stored in sealable, non-absorbing bags or containers prior to determining mass to start the test.

7 PROCEDURE

7.1 The test sample shall have its mass determined to the nearest 1 gram for coarse aggregate and to the nearest 0.1 gram for fine aggregate. This procedure provides the “Original Sample Mass, g” (OSM).

7.2 The test sample shall be dried back to constant mass by the selected source of heat as specified herein.

7.2.1 ***Caution*** – When using a microwave oven, occasionally minerals are present in aggregates that may cause material to overheat and explode. If this occurs, it can damage the microwave oven. When a gas burner or electric hot plate is used for drying, the technician shall continually attend the sample. The gas burner or electric hot plate should be operated on a low-as-needed heat to prevent popping, crackling, and/or sizzling noise from the aggregate during drying. If these noises occur, the heat must be turned down and/or the sample must be constantly stirred during drying to prevent potential aggregate particle breakdown.

7.3 Constant mass is defined as the sample at which there has not been more than a 0.5-gram mass loss during a 1 hour of drying. This should be verified occasionally.

After the test sample has been dried to constant mass, the test sample shall have its mass determined as soon as the pan or container can safely be handled to prevent additional moisture from being pulled from the air into the aggregate structure.

7.4 Determine the mass of the test sample to the nearest 1 gram for coarse aggregate and to the nearest 0.1 gram for fine aggregate. .

This procedure provides the "Total Dry Mass, g" (TDM). The TDM will also be used for calculation of gradation samples.

8 CALCULATION

8.1 The "Aggregate Moisture Content" shall be determined by using the following formula:

$$P = 100(OSM - TDM) / TDM$$

where:

P = Aggregate Moisture Content (%)
OSM = Original Sample Mass, g.

and:

TDM = Dried Sample Mass g.

Results shall be reported as required and in the appropriate plant diary.

Test results shall be rounded to the nearest 0.1 percent. All rounding shall be according to ASTM E 29 (Illinois Modified)

8.2 Surface moisture content is equal to the difference between the total evaporable moisture content and the absorption, with all values based on the mass of a dry sample. Absorption may be determined in accordance with ITP 85, Test for Specific Gravity and Absorption of Coarse Aggregate, or ITP 84, Test for Specific Gravity and Absorption of Fine Aggregate.

Illinois Test Procedure 301

Effective Date: February 1, 2014

Fine Aggregate Moisture Content by the Flask Method

Reference Test Procedure(s):

1. Illinois Specification 101, Minimum Requirements for Electronic Balances

2. AASHTO M 231, Weighing Devices Used in the Testing of Materials

3. Illinois Test Procedure 2, Sampling of Aggregates

4. Illinois Test Procedure 84, Specific Gravity and Absorption of Fine Aggregate

5. Illinois Test Procedure 248, Reducing Samples of Aggregate to Testing Size

6. ASTM E 29 (Illinois Modified), Standard Practice for Using Significant Digits in Test Data to Determine Conformance with Specifications

To maintain brevity in the text, the following will apply:

Example: AASHTO M 231 will be designated as "M 231."
Illinois Test Procedure 2 will be designated as "ITP 2".
ASTM E 29 (Illinois Modified) will be designated as "ASTM E 29."

A. FINE AGGREGATE MOISTURE CONTENT

1. GENERAL

This Illinois Test procedure was developed to replace AASHTO T 142, "Surface Moisture in Fine Aggregate," which was AASHTO discontinued. The equivalent ASTM designation is C 70. The test is a convenient procedure for field determination of **free moisture** (surface moisture) of fine aggregate, if specific gravity values are known.

The accuracy of the test procedure depends upon accurate information on the bulk specific gravity of the material in a saturated surface-dry condition.

All rounding shall be according to ASTM E 29.

2. EQUIPMENT

a. Balance – The balance or scale shall conform to M 231 and Illinois Specification 101.

b. Flask – A suitable container or flask, preferably of glass or non-corrosive metal. The container may be a pycnometer, volumetric flask, graduated volumetric flask, or other suitable measuring device. The volume of the container shall be from two to three times the loose volume of the test sample. The container shall be so designed that it can be filled to the mark, or the volume of its contents read, within 0.5 ml or less.

3. PROCEDURE

Select a representative sample of the fine aggregate to be tested for free moisture content. The sample shall be obtained according to ITP 2 and ITP 248. Protect the sample from moisture loss until weighing. The test sample shall have a minimum mass of 200 grams. However, larger test samples will yield more accurate results. If a Chapman Flask is used, as described in Section 5, then a 500 gram test sample shall be required.

The free moisture content may be determined either by mass or by volume. In each case, the test shall be performed at a temperature range of 18 to 29 °C (65 to 85 °F).

a. Determination by Mass—Determine the mass of the container filled with water to the known volume mark. Before placing the test sample into the container, reduce the water level to prevent the water from going over the mark when the test sample is added. Introduce the test sample into the container, and remove entrapped air. Refill the container to the mark, and determine the mass of the container and test sample. Calculate the amount of water displaced by the test sample as follows:

$$V_S = W_C + W_S - W$$

Where: V_S = Mass of Water Displaced by the Test Sample, nearest 1 gram.

W_C = Mass of Container Filled to the Mark with Water, nearest 1 gram.

W_S = Mass of Aggregate Sample, nearest 1 gram.

W = Mass of Container, Aggregate Sample, and Water Filled to the Mark, nearest 1 gram.

b. Determination by Volume—Measure a volume of water (ml) sufficient to cover the test sample, and place in the container. Introduce the test sample into the container, and remove entrapped air.

When a graduated flask is used, determine the combined volume of the test sample and the water by direct reading. When a pycnometer or volumetric flask of known volume is used, fill the container to the known volume mark with an additional measured volume of water. The flask or pycnometer volume is then equal to the combined volume of the test sample and water. Calculate the amount of water displaced by the test sample as follows:

$$V_S = V_2 - V_1$$

Where: V_S = Volume of Water Displaced by the Test Sample, nearest 1 ml.

V_2 = Combined Volume of the Test Sample and Water, nearest 1 ml.

V_1 = Total Volume of Water in the Container Required to Cover the Test Sample and Bring the Level up to the Known Volume Mark, nearest 1 ml.

Note: 1 ml of water has the mass of 1 gram.

4. CALCULATION

a. Percentage of Free Moisture in Terms of Saturated Surface-Dry Aggregate

$$P = [(V_S - V_D) - (W_S - V_S)] \times 100$$

Where:

P = Free Moisture in Terms of Saturated Surface-Dry Fine Aggregate, nearest 0.1 percent.

V_S = Mass of Water Displaced, nearest 1 gram.

V_D = Mass of Test Sample, nearest 1 gram, Divided by the Bulk Specific Gravity of the Fine Aggregate in a Saturated Surface-Dry Condition, nearest 0.01, Determined According to ITP 84.

W_S = Mass of Test Sample, nearest 1 gram.

b. Percentage of Free Moisture in Terms of Dry Aggregate with Known Absorption

$$P_D = P \times (1 + \frac{P_A}{100})$$

Where:

P_D = Free Moisture in Terms of Dry Fine Aggregate, nearest 0.1 percent.

P = Free Moisture in Terms of Saturated Surface-Dry Fine Aggregate, nearest 0.1 percent.

P_A = Absorption of the Fine Aggregate, nearest 0.1 percent, Determined According to ITP 84.

Total moisture content, on a dry aggregate basis, is the sum of the free moisture, P_D, and the absorption, P_A.

5. FINE AGGREGATE MOISTURE CONTENT BY THE FLASK METHOD

The Chapman Flask is graduated as discussed in Section 3b. The Chapman Flask can be used to determine the percent of free moisture (surface moisture) of fine aggregate.

For example, assume a fine aggregate with a known saturated surface-dry specific gravity (G_S) of 2.62. The Chapman Flask is filled with water to the 200 ml line, which is located between the two bulbs of the flask. A 500 gram test sample of fine aggregate is then poured into the flask, and agitated to remove any entrapped air. The flask is then placed on a level surface, and the water level is read on the neck of the flask. For this example, assume a final reading (V) of 400 ml. The percent free moisture, P, is calculated to the nearest 0.1 percent as follows:

$$P = \left(\frac{V - 200 - \frac{500}{G_S}}{700 - V} \right) \times 100$$

$$P = \left(\frac{400 - 200 - \frac{500}{2.62}}{700 - 400} \right) \times 100$$

P = 3.1 percent

The percent of free moisture can also be determined from the following tables using the above formula. Using the values from the previous example, enter the table at the final reading from the flask (e.g. V = 400 ml), read horizontally to the specific gravity column desired (e.g. G_S = 2.62), and read the percent moisture directly as 3.1 percent.

FORMULA USED: PERCENT FREE MOISTURE, P = $\left(\dfrac{V - 200 - \dfrac{500}{G_S}}{700 - V}\right) \times 100$

PERCENT FREE MOISTURE, P: CHAPMAN FLASK METHOD FOR 500 GRAM TEST SAMPLE

READING FROM FLASK	G_S 2.70	G_S 2.69	G_S 2.68	G_S 2.67	G_S 2.66	G_S 2.65	G_S 2.64	G_S 2.63	G_S 2.62	G_S 2.61	G_S 2.60	G_S 2.59	G_S 2.58
391	1.9	1.7	1.4	1.2	1.0	0.8	0.5	0.3	0.1	0.0	0.0	0.0	0.0
392	2.2	2.0	1.8	1.5	1.3	1.1	0.8	0.6	0.4	0.1	0.0	0.0	0.0
393	2.5	2.3	2.1	1.9	1.6	1.4	1.2	0.9	0.7	0.5	0.2	0.0	0.0
394	2.9	2.7	2.4	2.2	2.0	1.7	1.5	1.3	1.0	0.8	0.6	0.3	0.0
395	3.2	3.0	2.8	2.5	2.3	2.1	1.8	1.6	1.4	1.1	0.9	0.6	0.4
396	3.6	3.3	3.1	2.9	2.6	2.4	2.2	1.9	1.7	1.5	1.2	1.0	0.7
397	3.9	3.7	3.4	3.2	3.0	2.7	2.5	2.3	2.0	1.8	1.5	1.3	1.1
398	4.2	4.0	3.8	3.5	3.3	3.1	2.8	2.6	2.4	2.1	1.9	1.6	1.4
399	4.6	4.4	4.1	3.9	3.7	3.4	3.2	3.0	2.7	2.5	2.2	2.0	1.7
400	4.9	4.7	4.5	4.2	4.0	3.8	3.3	3.3	3.1	2.8	2.6	2.3	2.1
401	5.3	5.1	4.8	4.6	4.4	4.1	3.7	3.7	3.4	3.2	2.9	2.7	2.4
402	5.6	5.4	5.2	4.9	4.7	4.5	4.0	4.0	3.7	3.5	3.3	3.0	2.8

FORMULA USED: PERCENT FREE MOISTURE, P = $\left(\dfrac{V - 200 - \dfrac{500}{G_S}}{700 - V} \right) \times 100$

PERCENT FREE MOISTURE, P: CHAPMAN FLASK METHOD FOR 500 GRAM TEST SAMPLE

READING FROM FLASK	G_S 2.70	G_S 2.69	G_S 2.68	G_S 2.67	G_S 2.66	G_S 2.65	G_S 2.64	G_S 2.63	G_S 2.62	G_S 2.61	G_S 2.60	G_S 2.59	G_S 2.58
403	6.0	5.8	5.5	5.3	5.1	4.8	4.6	4.3	4.1	3.8	3.6	3.4	3.1
404	6.4	6.1	5.9	5.7	5.4	5.0	4.9	4.7	4.4	4.2	4.0	3.7	3.5
405	6.7	6.5	6.2	6.0	5.8	5.5	5.3	5.1	4.8	4.6	4.3	4.1	3.8
406	7.1	6.8	6.6	6.4	6.1	5.9	5.6	5.4	5.2	4.9	4.7	4.4	4.1
407	7.4	7.2	7.0	6.7	6.5	6.3	6.0	5.8	5.5	5.3	5.0	4.8	4.5
408	7.8	7.6	7.3	7.1	6.9	6.6	6.4	6.1	5.9	5.6	5.4	5.1	4.9
409	8.2	7.9	7.7	7.5	7.2	7.0	6.7	6.5	6.2	6.0	5.7	5.5	5.2
410	8.6	8.3	8.1	7.8	7.6	7.4	7.1	6.9	6.6	6.4	6.1	5.8	5.6
411	8.9	8.7	8.4	8.2	8.0	7.7	7.5	7.2	7.0	6.7	6.5	6.2	6.0
412	9.3	9.1	8.8	8.6	8.3	8.1	7.8	7.6	7.3	7.1	6.8	6.6	6.3
413	9.7	9.4	9.2	9.0	8.7	8.5	8.2	8.0	7.7	7.5	7.2	7.0	6.7
414										7.8	7.6	7.3	7.1

Illinois Test Procedure 302

Effective Date: February 1, 2014

Aggregate Specific Gravity and Moisture Content by the Dunagan Method

Reference Test Procedure(s):

1. Illinois Specification 101, Minimum Requirements for Electronic Balances
2. AASHTO M 231, Weighing Devices Used in the Testing of Materials
3. Illinois Test Procedure 2, Sampling of Aggregates
4. Illinois Test Procedure 84, Specific Gravity and Absorption of Fine Aggregate
5. Illinois Test Procedure 85, Specific Gravity and Absorption of Coarse Aggregate
6. Illinois Test Procedure 248, Reducing Samples of Aggregate to Testing Size
7. ASTM E 29 (Illinois Modified), Standard Practice for Using Significant Digits in Test Data to Determine Conformance with Specifications

To maintain brevity in the text, the following will apply:

Example: AASHTO M 231 will be designated as "M 231."
Illinois Test Procedure 2 will be designated as "ITP 2."
ASTM E 29 (Illinois Modified) will be designated as "ASTM E 29."

A. SPECIFIC GRAVITY – DUNAGAN METHOD

1. GENERAL

The specific gravity is determined, as specified by the Department, according to ITP 84 and ITP 85.

The Dunagan apparatus (specific gravity and moisture determinator) developed by Professor W.M. Dunagan is used as a convenient method for checking the specific gravity and moisture content of aggregate in the field.

All rounding shall be according to ASTM E 29.

2. EQUIPMENT

The Dunagan apparatus is a specially designed balance for determining an aggregate sample's mass in water and in air. As an alternative to acquiring a Dunagan apparatus kit, a homemade Dunagan apparatus can be assembled by acquiring the following equipment:

a. Electronic Balance – The electronic balance shall conform to M 231 and Illinois Specification 101. The electronic balance shall have a weight below hook.

b. Tank – The tank shall be made of non-corrosive material, and shall have an overflow spout. The tank shall be of sufficient size for the pail. The pail shall not touch the bottom or sides of the tank when submerged in the water held by the tank.

c. Pail – The pail shall be made of non-corrosive material, and shall be of sufficient size to hold the aggregate sample.

d. Stand – The stand shall be able to support the weighing operation. To allow for the balance's weigh below hook, a hole is required in the center of the stand. The stand shall have sufficient height to easily remove the submerged pail from the tank.

3. PROCEDURE FOR MASS OF AGGREGATE SAMPLE IN WATER

- Dunagan Apparatus Kit

  The equipment is set up as illustrated in Figure 1. Fill tank "A" with water up to the overflow spout "B". The empty pail "C" is immersed in water and suspended from the balance. Place a clean, dry scoop "D" on the right hand scale pan and adjust the scales to balance. To perform the initial balance, it may be necessary to add washers on the left hanger "E" to act as counterweights. Thereafter, the final adjustment may be performed with the calibration screw on the balance.

  Remove the pail from the tank. Partially fill the pail with water taken from the tank, and slowly pour the sample into the pail. Pouring the sample into the water will prevent the entrapping of air with the sample. The submerged sample shall be stirred to dislodge entrapped air. If material clings to the inside of the scoop, place the scoop in the mouth of the pail and rinse with the water. Then slowly immerse the pail obliquely into the tank, allowing water to flow slowly over one side of the pail. This immersion should be done carefully to prevent materiel from washing out of the pail. Suspend the pail from the end of the left hanger. If necessary, add water to the tank to bring the water level up to the overflow spout. Permit any excess water to overflow. Obtain the immersed mass, by placing weights in the scoop and adjusting the rider.

- Homemade Dunagan Apparatus

  Fill the tank with water up to the overflow spout. The empty pail is immersed in water, and suspended from the end of the electronic balance weigh below hook. Tare the electronic balance.

  Remove the pail from the tank. Partially fill the pail with water taken from the tank, and slowly pour the sample into the pail. Pouring the sample into the water will prevent the entrapping of air with the sample. The submerged sample shall be stirred to dislodge entrapped air. If material clings to the inside of the scoop, place the scoop in the mouth of the pail and rinse with the water. Then slowly immerse the pail obliquely into the tank, allowing water to flow slowly over one side of the pail. This immersion should be done carefully to prevent material from washing out of the pail. Suspend the pail from the end of the electronic balance weigh below hook. If necessary, add water to the tank to bring the water level up to the overflow spout. Permit any excess water to overflow. Obtain the immersed mass.

4. PROCEDURE FOR MASS OF AGGREGATE SAMPLE IN AIR

- Dunagan Apparatus Kit – Whole Number Kilograms

  The Dunagan apparatus can be used to measure samples in whole number kilograms. This is convenient when the specified sample size is 1, 2, or 3 kilograms, as in Sections A.5., A.6., B.2., and B.3. The equipment is set up as illustrated in Figure 1. Adjust the scales to balance evenly as explained in the first paragraph of Section A.3 "Dunagan Apparatus Kit." Place the slotted kilogram weights on the left hanger, and pour enough material into the scoop to balance the scales.

- Dunagan Apparatus Kit – Fractional Kilograms

  The Dunagan apparatus can be converted to a balance which measures samples in fractional kilograms, such as 1.5 kilograms. This is convenient if an electronic balance is not required by specifications; or if the slotted kilogram weights discussed in "Dunagan Apparatus Kit – Whole Number Kilograms" are not available.

  The equipment is set up as illustrated in Figure 2. Be advised that the pans are not interchangeable, and should be marked "L" and "S" respectively. "L" designates the pan for the long stirrup, and "S" is the pan which has been balanced for the short stirrup.

  Place a clean, dry scoop "D" on the left hand scale pan and adjust the scales to balance evenly. To perform the initial balance, it may be necessary to use a counterweight constructed from a can and shot. Thereafter, the final adjustment may be performed with the calibration screw on the balance.

  Place the sample in the scoop. Determine the sample mass by placing weights in the short stirrup pan, and adjusting the rider. The scale can measure to the nearest 0.1 gram.

- Homemade Dunagan Apparatus

  Determine the sample mass by weighing on top of the electronic balance.

5. COARSE AGGREGATE SPECIFIC GRAVITY

The specific gravity of saturated surface-dry coarse aggregate is determined as follows:

- Select a representative sample of the coarse aggregate to be tested. The sample shall be obtained according to ITP 2 and ITP 248.

- Measure approximately 3,000 grams of coarse aggregate sample per Section A.4. Soak the sample in water for 24 hours. Surface-dry the sample to a saturated condition according to ITP 85.

- Measure a 2,000 gram test sample per Section A.4.

- Determine the mass of the immersed test sample to the nearest 1 gram per Section A.3. This mass will be designated "W" for the test sample.

- Calculate the saturated surface-dry specific gravity of the coarse aggregate as follows:

$$G_S = \frac{2000}{2000 - W}$$

Or per Figure 3, which is the simpler method to use. To determine G_S from Figure 3:

- Start at a point which corresponds to the immersed mass (submerged weight) "W" of the test sample.

- Project this point horizontally until it intersects the vertical line of zero free moisture, and determine the specific gravity, G_S, by interpolation, to the nearest 0.01.

As an example: Suppose "W" for a 2,000 gram test sample is 1,230 grams. Projecting this point horizontally to intersect the line of zero free moisture, it is found that G_S is approximately 2.60.

6. FINE AGGREGATE SPECIFIC GRAVITY

To determine the specific gravity of saturated surface-dry fine aggregate, the test is identical to coarse aggregate, except as follows:

- After soaking, spread a sample of 2,300 grams or more on a flat surface, and air dry until the surface moisture has evaporated. Do not heat the sample to speed the process. The saturated surface-dry condition is reached when the material will roll freely from a scoop or trowel without sticking.

- Measure a 1,000 gram test sample per Section A.4.

- Calculate the saturated surface-dry specific gravity of the fine aggregate as follows:

$$G_S = \frac{1000}{1000 - W}$$

Or per Figure 3, which is the simpler method to use.

B. MOISTURE CONTENT DETERMINATION – DUNAGAN METHOD

1. GENERAL

This test will determine whether the aggregate has free moisture or will absorb moisture. The test is based upon a given sample of material (not in the saturated surface-dry condition) which will measure, when immersed in water, less or more than a sample of the same mass of material in the saturated surface-dry condition. This depends upon whether it contains free moisture or will absorb moisture.

For conducting this test, the equipment is set up as illustrated in Figure 1.

All rounding shall be according to ASTM E 29.

2. COARSE AGGEGATE MOISTURE CONTENT

To determine the free moisture or absorption of a sample of coarse aggregate, the test is conducted in the following manner:

- Select a representative sample of the coarse aggregate to be tested. The sample shall be obtained according to ITP 2 and ITP 248. Protect the sample from moisture loss until weighing.

- Measure a 2,000 gram test sample, as per Section A.4.

- Determine the mass of the immersed test sample to the nearest 1 gram. The immersed mass is obtained as per Section A.3., except the test sample shall remain in the pail for 10 minutes. This mass will be designated "W_1" for the test sample.

- If "W_1" is less than the "W" determined per Section A.5, the aggregate contains free moisture; if "W_1" is greater than "W," the aggregate will absorb moisture. The percentage of free moisture or absorption is determined by one of the following formulae:

If $W_1 < W$: Free Moisture (percent) $= \dfrac{0.05G_S \times (W - W_1)}{G_S - 1}$

If $W_1 > W$: Absorption (percent) $= \dfrac{0.05G_S \times (W - W_1)}{0.8G_S - 1}$

NOTE: G_S is the saturated surface-dry specific gravity of the coarse aggregate.

The factor, 0.8, is based on the assumption that the sample will become 80% saturated in 10 minutes.

The simpler method is to use Figure 3 and the immersed mass (submerged weight) "W_1." To determine the moisture content from Figure 3:

- Start at a point which corresponds to the immersed mass (submerged weight) "W_1" of the test sample.

- Project this point horizontally, until it intersects the line corresponding to the specific gravity of the aggregate, G_S.

- Project this point of intersection vertically and read the percentage of free moisture or absorption from the scale, at the bottom of the chart to the nearest 0.1. The value is interpolated.

As an example: Suppose G_S for the test sample is 2.56, and "W_1" is 1,170 grams. The vertical projection of the point of intersection of the line (representing these values) shows a free moisture content of approximately 4.0 percent.

3. FINE AGGREGATE MOISTURE CONTENT

To determine the free moisture or absorption of fine aggregate the test is identical to coarse aggregate. However, measure a 1,000 gram test sample and use one of the following formulae:

If $W_1 < W$: Free Moisture (percent) $= \dfrac{0.1G_S \times (W - W_1)}{G_S - 1}$

If $W_1 > W$: Absorption (percent) $= \dfrac{0.1G_S \times (W - W_1)}{0.8G_S - 1}$

NOTE: G_S is the saturated surface-dry specific gravity of the fine aggregate.

Again, the simpler method is to use Figure 3 for a 1,000 gram test sample.

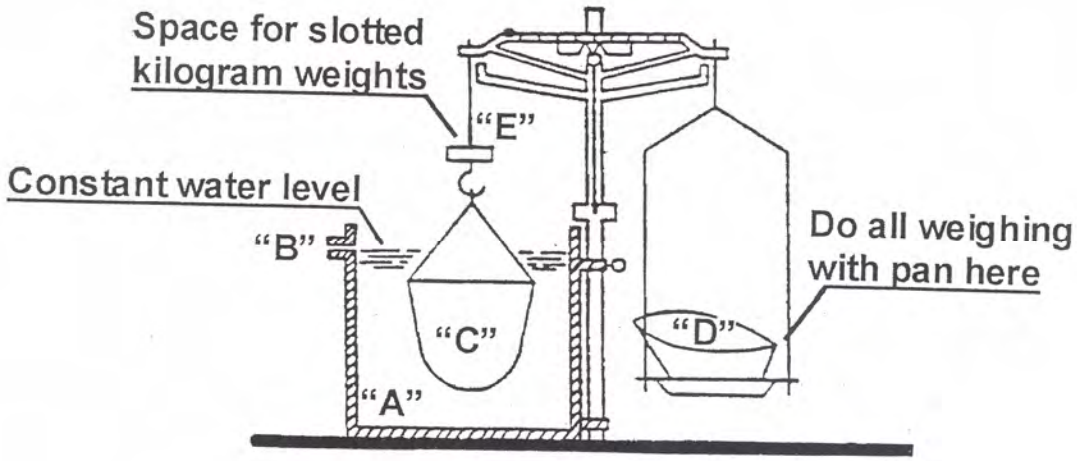

FIGURE 1

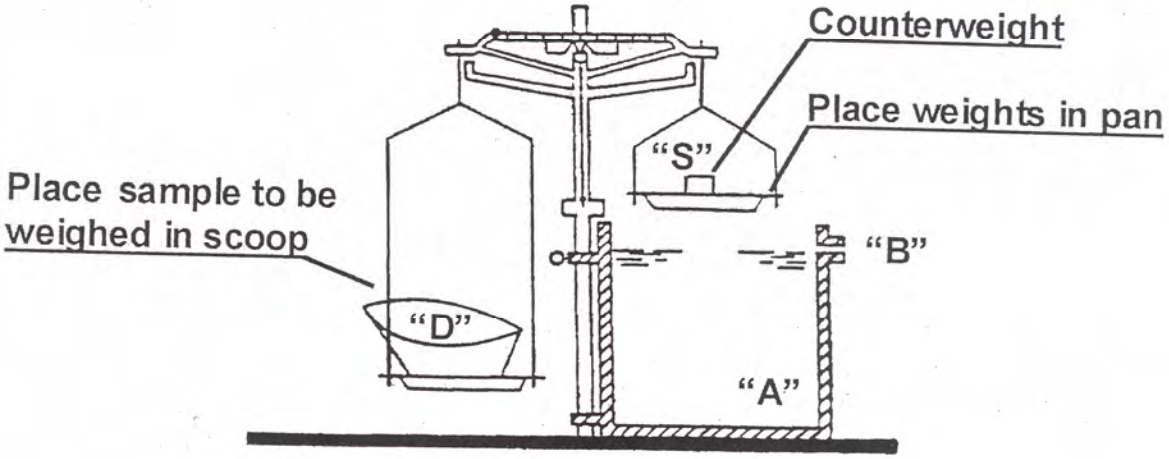

FIGURE 2

Figure 3
Chart for Determining Specific Gravity and Free Moisture or Absorption for either 1000 or 2000 Gram Samples Tested in the Specific Gravity and Moisture Determinator

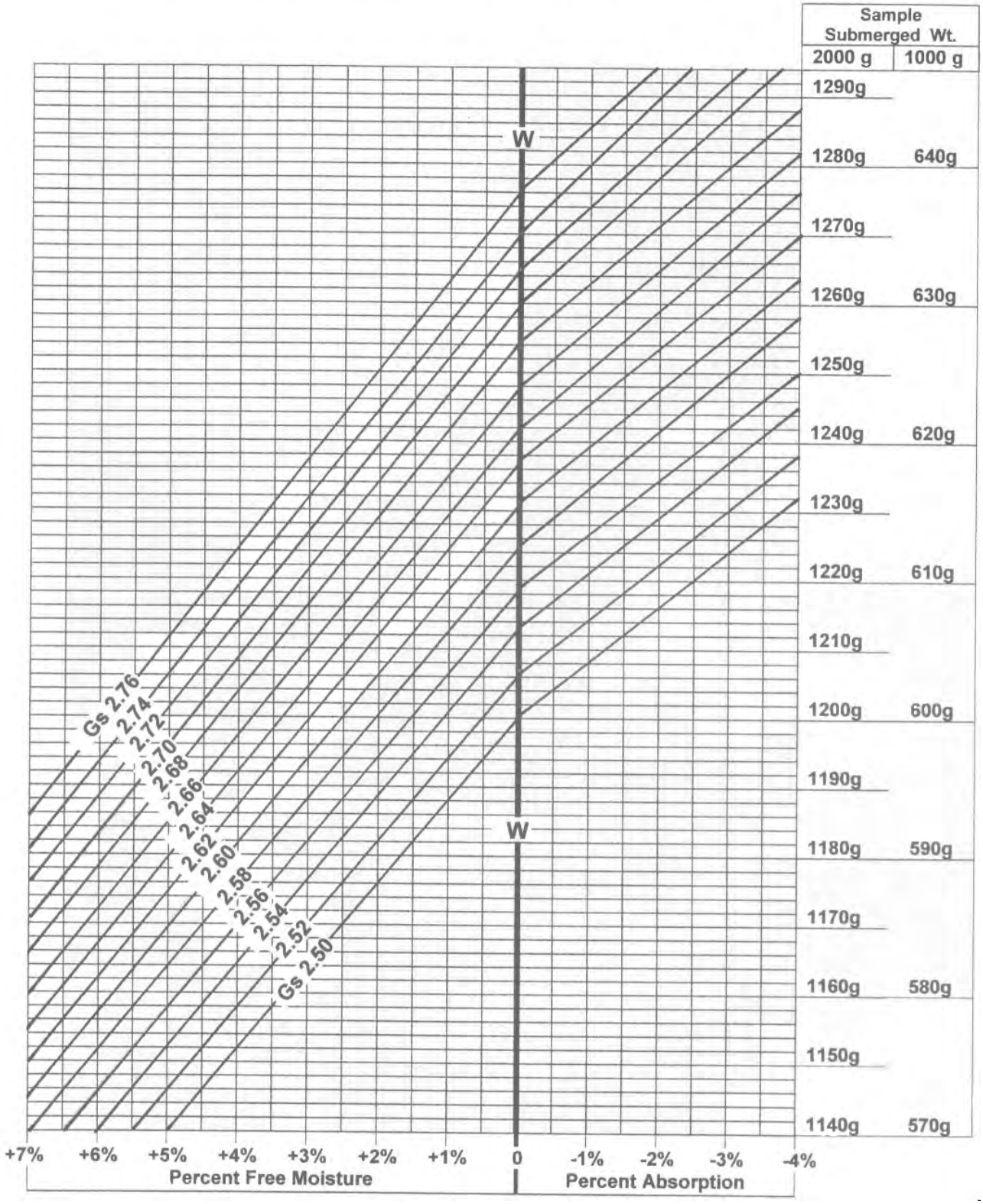

Illinois Test Procedure 303

Effective Date: February 1, 2014

Fine or Coarse Aggregate Moisture Content by Pycnometer Jar Method

Reference Test Procedure(s):

1. Illinois Specification 101, Minimum Requirements for Electronic Balances

2. AASHTO M 231, Weighing Devices Used in the Testing of Materials

3. Illinois Test Procedure 2, Sampling of Aggregates

4. Illinois Test Procedure 248, Reducing Samples of Aggregate to Testing Size

5. ASTM E 29 (Illinois Modified), Standard Practice for Using Significant Digits in Test Data to Determine Conformance with Specifications

To maintain brevity in the text, the following will apply:

Example: AASHTO M 231 will be designated as "M 231."
Illinois Test Procedure 2 will be designated as "ITP 2."
ASTM E 29 (Illinois Modified) will be designated as "ASTM E 29."

A. FINE OR COARSE AGGREGATE MOISTURE CONTENT

1. GENERAL

This Illinois Test procedure has been used for many years by District 2 (Dixon), but the District is uncertain as to the origin of the test. However, this test is similar to a test procedure used by the Iowa Department of Transportation. The test is a convenient procedure for field determination of **free moisture** (surface moisture) of fine or coarse aggregate, if specific gravity values are known.

The accuracy of the test procedure depends upon accurate information on the bulk specific gravity of the material in a saturated surface-dry condition.

All rounding shall be according to ASTM E 29.

2. EQUIPMENT

a. Balance – The balance or scale shall conform to AASHTO M 231 and Illinois Specification 101.

b. Pycnometer – A glass jar, gasket, and conical pycnometer top. A 0.946 L (1 qt.) jar is used for fine aggregate, and a 1.892 L (2 qt.) jar is used for coarse aggregate. Typically, a canning jar is used.

c. Funnel – A conical shape utensil which can be of any type of material. The funnel shall be of sufficient size for placement on top of the glass jar.

3. MATERIALS

a. Potable Water

b. Water Resistant Grease

c. Aggregate Sample

4. PROCEDURE

Select a representative sample of the fine or coarse aggregate to be tested for free moisture content. The sample shall be obtained according to ITP 2 and ITP 248. Protect the sample from moisture loss until weighing.

a. Mass of Pycnometer Filled with Water

- Apply a light coat of grease to the side of the gasket which will be in contact with the glass jar.
- Screw the pycnometer top tightly on the glass jar.
- Place a mark on the pycnometer top and glass jar to indicate the position of the tightened top. Always tighten the pycnometer top to this position. If the pycnometer top is ever tightened beyond the mark on the glass jar, re-mark the top of the jar.
- Fill the glass jar nearly full of water and screw on the pycnometer top. Finish filling the pycnometer by pouring water until a bead of water appears above the top's opening.
- Wipe off all exterior water on the pycnometer, and then weigh to the nearest 1 gram. Record the value as M_1.

b. Mass of Aggregate Sample

- When testing fine aggregate, measure a 1000 gram test sample.
- When testing coarse aggregate, measure a 2000 gram test sample.

c. Mass of Pycnometer Filled with Water and Aggregate

- Use the funnel to pour the aggregate sample into the glass jar. The jar shall contain approximately 50 mm (2 in.) of water.
- Fill the glass jar nearly full of water, and screw on the pycnometer top to the marked position. The water temperature shall be within ± 1.7 °C (3 °F) of the water used for calibrating the pycnometer. Finish filling the pycnometer.

- Place a finger over the pycnometer top opening, and gently roll and shake the pycnometer several times to remove entrapped air in the aggregate sample. When further rolling and shaking brings no more air bubbles to the top, finish filling the pycnometer. The pycnometer is filled when a bead of water appears above the top's opening.

- Wipe off all exterior water on the pycnometer, and then weigh to the nearest 1 gram. Record the value as M_2.

5. CALCULATION

a. Mass of Water Displaced by the Aggregate Sample

$V_S = M_1 + M_S - M_2$

Where:

V_S = Mass of Water Displaced by the Aggregate Sample, nearest 1 gram.

M_1 = Mass of Pycnometer Filled with Water, nearest 1 gram.

M_S = Mass of Aggregate Sample (1000 grams for fine aggregate and 2000 grams for coarse aggregate).

M_2 = Mass of Pycnometer Filled with Water and Aggregate, nearest 1 gram.

b. Moisture Content

Calculate moisture content to the nearest 0.1 percent using the following equations:

Fine Aggregate Free Moisture (percent) = $\frac{V_S - (1000 \div G_S)}{1000 - V_S} \times 100$

Coarse Aggregate Free Moisture (percent) = $\frac{V_S - (2000 \div G_S)}{2000 - V_S} \times 100$

Where:

V_S = Mass of Water Displaced by the Aggregate Sample, nearest 1 gram.

G_S = Saturated Surface-Dry Specific Gravity of Aggregate, nearest 0.01.

Illinois Department of Transportation

Aggregate Moisture Worksheet
Pycnometer Jar Method

Date: (mm/dd/yyyy) _____

Producer No.: _____

Producer Name: _____

Location: _____

	Coarse Aggregate	Fine Aggregate
1. Aggregate Specific Gravity at Saturated Surface-Dry (SSD)		
2. Sample Size, g	2000	1000
3. Sample Size ÷ Specific Gravity ..... Line 2 ÷ Line 1		
4. Mass of pycnometer full of water, g		
5. Mass of pycnometer containing sample and water, g		
6. Mass of water displaced by sample, g..... Line 2 + Line 4 - Line 5		
7. Difference, g ..... Line 6 - Line 3		
8. Sample Size minus water displaced, g ..... Line 2 - Line 6		
9. Percent Surface Moisture, *P*, +/- %..... Line 7 ÷ Line 8 × 100		

Coarse Aggregate Surface Moisture, $$P = \left[\frac{V_s - (2000/G_s)}{2000 - V_s} \right] \times 100$$

Fine Aggregate Surface Moisture, $$P = \left[\frac{V_s - (1000/G_s)}{1000 - V_s} \right] \times 100$$

Where: P is the surface moisture, to the nearest 0.1 %
V_s is the mass of water displaced by the aggregate sample, to the nearest 1 g
G_s is the aggregate specific gravity at saturated surface-dry, to the nearest 0.01

Illinois Test Procedure 304
Effective Date: March 1, 2003
Revised Date: March 1, 2013

PULL-OFF TEST (SURFACE METHOD)

Reference Test Procedures:

1. American Concrete Institute Manual of Concrete Practice ACI 503R-93, (Reapproved 1998), Appendix A (Test Methods).
2. Virginia Test Method for Testing Epoxy Concrete Overlays for Surface Preparation and Adhesion, VTM-92.
3. ASTM C 1583/C 1583M-04, Standard Test Method for Tensile Strength of Concrete Surfaces and the Bond Strength or Tensile Strength of Concrete Repair and Overlay Materials by Direct Tension (Pull-off Method)

1. GENERAL

This test method outlines the procedure for determining the surface preparation quality of an existing concrete surface that is to be overlaid.

2. EQUIPMENT

a. Pull-off testing device with sufficient capacity and capable of applying load at the specified rate,

b. Pull-off caps, 50 – 100 mm (2 – 4 inches) in diameter,

c. Ruler or measuring device,

d. Marker for outlining area,

e. Putty knife for cleaning caps,

f. Small propane torch,

g. Gloves, heat-resistant,

h. Gloves, solvent-resistant.

3. MATERIALS

a. Rapid-curing epoxy compound with a working (pot) life of 3 to 10 minutes. Pot life is the time after mixing during which the epoxy retains sufficient workability for proper use.

b. Cleaning solvent.

4. PROCEDURE

a. After all cleaning has been performed in preparation for overlay placement, determine test locations. If random sample locations for testing are required, determine according to the Department's "Method for Obtaining Random Samples for Concrete." Test locations shall be adjusted a maximum of 0.3 m (12 inches) when they are too close to a joint, parapet, or other obstruction, or when they are over a patch or other area that has not been mechanically scarified. The center-to-center distance of adjacent test specimens shall be a minimum of two disk diameters. If the concrete contains reinforcement, do not test at locations where the concrete cover is less than 20 mm (¾ in.). A cover meter (pachometer) or other methods may be used to locate reinforcement and verify the concrete cover.

b. Using a marker, mark a circle at each location using a pull-off cap as a template.

c. The test area must be thoroughly dry. No additional cleaning or surface preparation should be performed at the test locations. A small propane torch may be used to dry an area to be tested. Heating the surface to a temperature exceeding 50° C (120° F) may damage the surface and result in a lower pull-off strength. Allow the surface to cool to ambient temperature before testing.

d. Mix the epoxy according to the manufacturer's instructions. Place a thin layer of epoxy within the marked area on the deck surface and on the bottom of the cap. Carefully center the cap within the marked circle. Twist and lightly press the cap to ensure that there are no gaps between the cap and the epoxy-covered test area. Wipe off excess epoxy around the cap.

e. Allow the epoxy to set in accordance with the manufacturer's instructions. As an option when air temperature is below 15° C (60° F), a small propane torch may be used to heat the top of the cap for very short intervals. The temperature of the cap should not exceed 50° C (120° F). Allow the cap to cool to air temperature before testing.

f. If the area immediately surrounding the cap is subjected to moisture (i.e. rain) after the cap has been attached to the test area, the area must be allowed to dry before conducting the test. Moisture can significantly reduce the tensile (pull-off) strength.

g. Attach the pull-off test equipment to the cap. Follow the manufacturer's instructions. Use a loading rate of 35 ± 14 kPa per second (5 ± 2 psi per second).

h. Determine the mode of failure, according to the following definitions.

   Failure of Epoxy – Epoxy pulled away from either the cap or the surface of the concrete.

   Failure of Concrete Surface – Failure within 6 mm (¼ inch) of the top surface of the concrete. At least 90 percent of the failure surface consists of concrete.

   Failure of Underlying Concrete – Failure plane is greater than 6 mm (1/4 inch) below the surface of the concrete.

i. If the mode of failure is "Failure of Epoxy" or "Failure of Underlying Concrete," then repeat the test at a location at least 0.15 m (6 inch), and not more than 0.6 m (2 feet), from the previous test. However, if the mode of failure is "Failure of the Epoxy" or "Failure of Underlying Concrete" and the tensile (pull-off) strength is greater than the specification requirement, repeating the test is not necessary.

j. Record the load at failure in kN (lbs.).

k. Measure the diameter of the failed concrete surface at four evenly spaced locations around the circumference. Average the four measurements and record as the average diameter in millimeters (inches) to the nearest ± 3 mm (±1/8 inch).

5. CLEANING PROCEDURE FOR PULL-OFF CAPS

a. After performing a pull-off test, pull-off caps shall be cleaned properly to ensure that epoxy can bond adequately to their surface. Cap cleaning should be performed in a well ventilated area.

b. Place the cap on a heat-resistant, non-flammable surface. Verify with the epoxy and equipment manufacturer that a small propane torch may be used. Using the propane torch, direct the flame on the concrete/epoxy material to be removed until the epoxy becomes pliable. Use a putty knife to remove as much of the epoxy and concrete as possible. **Warning: The use of a propane torch to remove the epoxy from the pull-off cap may generate hazardous fumes.**

c. Allow the cap to cool to room temperature (approximately 77° F) or immerse the cap in water. Clean the cap according to instructions provided by the epoxy manufacturer, using the solvent they recommend. The following procedure is for when acetone may be used.

d. Read and follow the label on the acetone container, which provides instructions and cautions. Read and follow the Material Safety Data Sheet (MSDS) for acetone safety, handling, and disposal. **Warning: Acetone is extremely flammable and vapors are harmful.**

e. Fill a clean metal gallon can with enough acetone to cover the caps.

f. Place a lid on the container loosely, and protect the container from tipping. Keep the container at room temperature (approximately 77° F) and in a well ventilated area. **Warning: Resident Engineer's field office is not appropriate for this step.**

g. Soak the caps for 8-24 hours. The longer the soaking period, the easier the cleaning.

h. Remove the caps and clean the grooves carefully using a sharp, pointed object.

i. Once the majority of the epoxy has been removed, take a small amount of acetone and a clean rag and wipe the surface clean. The acetone will air dry and leave no oily residue.

j. The acetone can be reused. Discontinue use and properly dispose of the acetone when it becomes contaminated and no longer cleans effectively.

k. Store caps in a clean plastic bag or a sealed container.

l. New pull-off caps will require cleaning with acetone. Even a small amount of oil or residue will prevent the epoxy from bonding to the cap.

m. Disclaimer: The cleaning procedure for pull-off caps is provided as an aid for field personnel. In all cases, field personnel are responsible for contacting the epoxy and equipment manufacturers to determine the best method for cleaning pull-off caps.

6. CALCULATIONS

Calculate the tensile (pull-off) strength of the concrete surface as follows, to the nearest 10 kPa (1 psi).

When load (L) is given in kN:

$$T = \frac{L}{\pi/4 \times (D)^2}$$

Where: T = tensile strength, kPa
L = load at failure, kN
π = 3.1416
D = diameter, meters

When load (L) is given in lbs.:

$$T = \frac{L}{\pi/4 \times (D)^2} \quad \text{or simplified,} \quad T = \frac{L}{D^2} \times 1.273$$

Where: T = tensile strength, psi
L = load at failure, lbs.
π = 3.1416
D = diameter, inches

NOTE: 1 psi = 6.897 kPa

7. REPORT

Report the following information:

a. Date of final cleaning of the concrete surface, and date of pull-off testing,

b. Type of equipment used for final cleaning of the concrete surface (i.e. shotblasting, high-pressure water blasting, abrasive blasting).

c. Length and width of each lot or sublot.

d. Station location for each random sample test location.

e. Individual load, average diameter of failed concrete surface, and tensile strength for each individual test.

f. Mode of failure.

8. CALIBRATION

The pull-off testing device shall be calibrated on an annual basis according to the manufacturer's recommended procedure or a procedure approved by the Department. A calibration log shall be maintained and kept with the equipment.

Illinois Test Procedure 305

Effective Date: March 1, 2003
Revised Date: March 1, 2013

PULL-OFF TEST (OVERLAY METHOD)

Reference Test Procedure(s):

1. American Concrete Institute Manual of Concrete Practice ACI 503R-93, (Reapproved 1998), Appendix A (Test Methods).

2. Virginia Test Method for Testing Epoxy Concrete Overlays for Surface Preparation and Adhesion, VTM-92.

3. ASTM C 1583/C 1583M-04, Standard Test Method for Tensile Strength of Concrete Surfaces and the Bond Strength or Tensile Strength of Concrete Repair and Overlay Materials by Direct Tension (Pull-off Method)

2. GENERAL

This test method outlines the procedure for determining the bond strength of a portland cement concrete or thin polymer overlay.

3. EQUIPMENT

a. Coring equipment,

b. Pull-off testing device with sufficient capacity and capable of applying load at the specified rate,

c. Pull-off caps, 50 – 100 mm (2 – 4 inches) in diameter,

d. Wire brush,

e. Ruler or measuring device,

f. Marker for outlining area,

g. Putty knife for cleaning caps,

h. Small propane torch,

i. Gloves, heat-resistant,

j. Gloves, solvent-resistant.

3. MATERIALS

a. Rapid-curing epoxy compound with a working (pot) life of 3 to 10 minutes,

b. Cleaning solvent.

4. PROCEDURE

a. Determine test locations. If random sample locations for testing are required, determine according to the Department's "Method for Obtaining Random Samples for Concrete." Test locations shall be adjusted a maximum of 0.3 m (12 inches) when they are too close to a joint, parapet, or other obstruction, or when they are over a patch or other area that has not been mechanically scarified. The center-to-center distance of adjacent test specimens shall be a minimum of two disk diameters. If the concrete contains reinforcement, do not test at locations where the concrete cover is less than 20 mm (¾ in.). A cover meter (pachometer) or other methods may be used to locate reinforcement and verify the concrete cover.

b. Using a marker, mark a circle at each location using a pull-off cap as a template.

c. Core completely through the overlay and at least 13 mm (1/2 inch) into the underlying concrete.

d. The top of the intact core must be thoroughly dry. A small propane torch may be used to dry an area to be tested. Heating the surface to a temperature exceeding 50 °C (120 °F) may damage the surface and result in a lower pull-off strength. Allow the surface to cool to air temperature before testing.

e. Carefully clean the surface of the core with a wire brush to remove any debris or film left from the coring operations.

f. Mix the epoxy according to manufacturer's instructions. Place a thin layer of epoxy on both the top of the core and the bottom of the cap. Carefully center the cap. Twist and lightly press the cap to ensure that are no gaps between the cap and the epoxy-covered core. Wipe off excess epoxy around the cap. Do not allow the epoxy to run down the side of the core into the annular cut.

g. Allow the epoxy to set in accordance with the manufacturer's instructions. As an option when air temperature is below 15 °C (60 °F), a small propane torch may be used to heat the top of the cap for very short intervals. The temperature of the cap should not exceed 50 °C (120 °F). Allow the cap to cool to air temperature before testing.

h. Attach the pull-off test equipment to the cap. Follow the manufacturer's instructions. Use a loading rate of 35 ± 14 kPa per second (5 ± 2 psi per second).

i. Determine the mode of failure, according to the following definitions.

<u>Failure of Epoxy</u> – Epoxy pulled away from either the cap or the surface of the overlay.

<u>Failure of Overlay Surface</u> – Failure within 6 mm (1/4 inch) of the top surface of the overlay.

<u>Failure in Overlay</u> – Failure plane is deeper than 6 mm (1/4 in.) below the top surface of the overlay and above the bond line between the overlay and underlying concrete.

<u>Failure at Bond Line</u> – Failure plane is at the bond line between the overlay and underlying concrete. The bottom of the overlay is covered with less than 50 percent (by area) of material from the underlying concrete.

<u>Failure of Underlying Concrete Surface</u> – Failure plane is just below the bond line. The bottom of the overlay is covered with at least 50 percent (by area) of material from the underlying concrete. The layer is less than 6 mm (1/4 inch) thick.

<u>Failure of Underlying Concrete</u> – Failure plane is greater than 6 mm (1/4 inch) below the bond line.

j. If the mode of failure is "Failure of Epoxy," "Failure of Overlay Surface," "Failure in Overlay," of "Failure of Underlying Concrete," then repeat the test at a location at least 0.15 m (6 inch), and not more than 0.6 m (2 feet), from the previous test. However, if the mode of failure is "Failure of

Epoxy," "Failure of Overlay Surface," "Failure in Overlay," or "Failure of Underlying Concrete," and the tensile (pull-off) strength is greater than the specification requirement, repeating the test is not necessary.

k. Record the load at failure in kN (lbs.).

l. Measure the diameter at four evenly spaced locations around the circumference of the core. Average the four measurements and record as the average diameter in millimeters (inches) to the nearest
± 3 mm (± 1/8 inch).

m. Measure the length of the core and record in millimeters (inches) to the nearest 3 mm (1/8 inch).

5. CLEANING PROCEDURE FOR PULL-OFF CAPS

a. After performing a pull-off test, pull-off caps shall be cleaned properly to ensure that epoxy can bond adequately to their surface. Cap cleaning should be performed in a well ventilated area.

b. Place the cap on a heat-resistant, non-flammable surface. Verify with the epoxy and equipment manufacturer that a small propane torch may be used. Using the propane torch, direct the flame on the concrete/epoxy material to be removed until the epoxy becomes pliable. Use a putty knife to remove as much of the epoxy and concrete as possible. **Warning: The use of a propane torch to remove the epoxy from the pull-off cap may generate hazardous fumes.**

c. Allow the cap to cool to room temperature (approximate 77 °F) or immerse the cap in water. Clean the cap according to instructions provided by the epoxy manufacturer, using the solvent they recommend. The following procedure is for when acetone may be used.

d. Read and follow the label on the acetone container, which provides instructions and cautions. Read and follow the Material Safety Data Sheet (MSDS) for acetone safety, handling, and disposal. **Warning: Acetone is extremely flammable and vapors are harmful.**

e. Fill a clean metal gallon can with enough acetone to cover the caps.

f. Place a lid on the container loosely, and protect the container from tipping. Keep the container at room temperature (approximately 77 °F) and in a well ventilated area. **Warning: Resident Engineer's field office is not appropriate for this step.**

g. Soak the caps for 8-24 hours. The longer the soaking period, the easier the cleaning.

h. Remove the caps and clean the grooves carefully using a sharp, pointed object.

i. Once the majority of the epoxy has been removed, take a small amount of acetone and a clean rag and wipe the surface clean. The acetone will air dry and leave no oily residue.

j. The acetone can be reused. Discontinue use and properly dispose of the acetone when it becomes contaminated and no longer cleans effectively.

k. Store caps in a clean plastic bag or a sealed container.

l. New pull-off caps will require cleaning with acetone. Even a small amount of oil or residue will prevent the epoxy from bonding to the cap.

m. Disclaimer: The cleaning procedure for pull-off caps is provided as an aid for field personnel. In all cases, field personnel are responsible for contacting the epoxy and equipment manufacturers to determine the best method for cleaning pull-off caps.

6. CALCULATIONS

Calculate the tensile (pull-off) strength of the overlay as follows, to the nearest 10 kPa (1 psi):

<u>When load (L) is given in kN:</u>

$$T = \frac{L}{\pi/4 \times (D)^2}$$

Where: T = tensile strength, kPa
L = load at failure, kN
 = 3.1416
D = diameter, meters

<u>When load (L) is given in lbs.:</u>

$$T = \frac{L}{\pi/4 \times (D)^2} \quad \text{or simplified,} \quad T = \frac{L}{D^2} \times 1.273$$

Where: T = tensile strength, psi
L = load at failure, lbs.
 = 3.1416
D = diameter, inches

NOTE: 1 psi = 6.897 kPa

7. REPORT

Report the following information:

a. Date of overlay placement and date of pull-off testing,

b. Type of equipment used for final cleaning of the concrete surface (i.e. shotblasting, high-pressure water blasting, abrasive blasting),

c. Stating location for each test location.

d. Individual load, average diameter of failed specimen at failure plane, and tensile strength for each individual test.

e. Mode of failure.

8. CALIBRATION

The pull-off testing device shall be calibrated on an annual basis according to the manufacturer's recommended procedure or a procedure approved by the Department. A calibration log shall be maintained and kept with the equipment.

Illinois Test Procedure 306

Effective Date: February 1, 2014

VOIDS TEST OF COARSE AGGREGATE FOR CONCRETE MIXTURES

Reference Test Procedure(s):

1. Illinois Specification 101, Minimum Requirements for Electronic Balances

2. AASHTO M 231, Weighing Devices Used in the Testing of Materials

3. Illinois Test Procedure 255, Total Moisture Content of Aggregate by Drying

4. ASTM E 29 (Illinois Modified), Standard Practice for Using Significant Digits in Test Data to Determine Conformance with Specifications

To maintain brevity in the text, the following will apply:

Example: AASHTO M 231 will be designated as "M 231."
Illinois Test Procedure 255 will be designated as "ITP 255."
ASTM E 29 (Illinois Modified) will be designated as "ASTM E 29."

1. GENERAL

The volume of voids per unit volume of dry rodded coarse aggregate relates experimental data to the theory of proportioning, which produces the amount of coarse aggregate needed in a concrete mixture. Voids may also be defined as the ratio of the volume of empty spaces in a unit volume of dry rodded coarse aggregate to the unit volume of dry rodded coarse aggregate.

All rounding shall be according to ASTM E 29.

2. EQUIPMENT

k. The measure shall be metal, cylindrical, watertight, and of sufficient rigidity to retain its form under rough usage. The top and bottom of the measure shall be true and even, and its sides should be provided with handles. The measure shall have a capacity of 0.014 or 0.028 m^3 (0.5 or 1.0 ft^3).

l. Tamping Rod—A round, straight steel rod 16 mm (5/8 in.) in diameter and at least 584 mm (23 in.) in length, having the tamping end or both ends rounded to a hemispherical tip the diameter of which is 16 mm (5/8 in.).

m. The balance or scale shall conform to M 231 and Illinois Specification 101. Refer to the requirements for unit weight.

3. PROCEDURE

n. Fill the measure with water at room temperature and cover with a piece of plate glass in such a way as to eliminate bubbles and excess water. The measure shall be calibrated by accurately determining the mass (weight) of water, to the nearest 0.05 kg (0.1 lb.), required to fill it. Calculate the Measure Volume according to Section 5.0.

o. The sample of aggregate shall be obtained and dried according to ITP 255, and shall be thoroughly mixed. When more than one size coarse aggregate is to be used in a mixture, the test shall be performed on the combination.

p. The measure shall be filled in three equal lifts. Level each lift with the fingers. Each layer shall be rodded 25 times when the measure's capacity is 0.014 m^3 (0.5 ft^3) or 50 times when the measure's capacity is 0.028 m^3 (1.0 ft^3).

Rodding shall be evenly distributed over the surface of the aggregate. The rodding should knead the layers together by the tamping rod extending slightly into the previous layer. Care shall be taken to rod immediately above the bottom of the measure without striking it.

q. With the final layer, the measure shall be filled to overflowing, rodded, and the surplus aggregate struck off, using the tamping rod as a straightedge.

r. The Net Mass (Weight) of the aggregate in the measure shall then be determined to the nearest 0.05 kg (0.1 lb.).

4. CALCULATIONS

a. The Unit Weight of the coarse aggregate is the Net Mass (Weight) of the coarse aggregate in the measure divided by the Measure Volume. Determine the Unit Weight to the nearest 0.01 kg/m^3 (0.01 lb/ft^3).

b. The volume of voids per unit volume of oven-dry rodded coarse aggregate is calculated to the nearest 0.01 as follows:

Metric:

$$\text{Voids, } V = \frac{(G_a \times 1000.00) - \text{Unit Wt.}}{G_a \times 1000.00}$$

English:

$$\text{Voids, } V = \frac{(G_a \times 62.37) - \text{Unit Wt.}}{G_a \times 62.37}$$

$$G_a = \frac{G_s}{\left(1 + \frac{A}{100}\right)}$$

Where: *Unit Wt.* is the unit weight of the coarse aggregate

G_a is the oven-dry specific gravity calculated to the nearest 0.01

G_s is the saturated surface-dry specific gravity of the coarse aggregate to the nearest 0.01, which is obtained from the Department's District office.

A is the percent absorption of the coarse aggregate to the nearest 0.1, which is obtained from the Department's District office.

When more than one size coarse aggregate is used in a mixture, calculate the oven-dry specific gravity for each aggregate. Then obtain a weighted average of the oven-dry specific gravity using the following formula.

$$WAG_a = (\frac{a}{100} \text{ x } A) + (\frac{b}{100} \text{ x } B) + (\frac{c}{100} \text{ x } C) + \ldots$$

Where: WAG_a = Weighted Average of Oven-dry Specific Gravity

a,b,c… = Percent of Total Coarse Aggregate

A,B,C… = Oven-dry Specific Gravity

The weighted average of the oven-dry specific gravity shall then be used in the Voids formula.

c. The test shall be performed at least twice. Test results with the same measure should check within 0.01.

5. CALIBRATION OF MEASURE

The Measure Volume is calculated to the nearest 0.01 m^3 (0.001 ft^3) as follows:

$$\text{Measure Volume} = \frac{M}{W}$$

Where: M = mass (weight) of water required to fill measure, kg (lb.)

W = unit weight of water (refer to Table 1), kg/m^3 (lb/ft^3)

Table 1. Unit Weight of Water

Temperature of Water		kg / m^3	lb / ft^3
°C	°F		
15.6	60	999.01	62.366
18.3	65	998.54	62.336
21.1	70	997.97	62.301
23.0	73.4	997.54	62.274
23.9	75	997.32	62.261
26.7	80	996.59	62.216
29.4	85	995.83	62.166

This Page Reserved

Illinois Test Procedure 307
Effective Date: April 1, 2009
Revised Date: March 1, 2013

Sampling and Testing of Controlled Low-Strength Material (CLSM)

I. SAMPLING OF CLSM

Sampling freshly mixed controlled low-strength material (CLSM) shall be performed according to Illinois Modified AASHTO R 60, except the elapsed time for obtaining the composite sample shall not exceed two minutes. The flow test shall start within five minutes of obtaining the composite sample. The molding of strength test specimens shall start within ten minutes of obtaining the composite sample. The sample is to be routinely mixed during the testing process because CLSM may segregate.

II. TEMPERATURE OF CLSM

The temperature test shall be according to Illinois Modified AASHTO T 309.

III. FLOW CONSISTENCY OF CLSM

The flow test shall consist of filling a 76 mm (3 in.) inside diameter by 152 mm (6 in.) long plastic cylinder. The maximum variation from the normal inside diameter and length shall be 3 mm (1/8 in.). The plastic cylinder shall be smooth, rigid, nonabsorbent, and open at both ends. The test method shall consist of the following:

- Dampen the inside of the cylinder.
- Place the cylinder on a flat, level, firm nonabsorbent surface that is free of vibration or other disturbances.
- Hold the cylinder firmly in place and fill in one lift without vibration, rodding, or tapping.
- Strike off the top of the cylinder to form a level surface while holding the cylinder in place. Remove surplus material from around the base of the cylinder.
- Immediately raise the cylinder vertically a minimum distance of 150 mm (6 in.) in 3 ± 1 seconds without any lateral or torsional motion.
- When the material has stopped flowing, measure the maximum diameter of the resulting spread and measure the diameter perpendicular to the maximum. Each measurement shall be to the nearest 10 mm (0.5 in.). If the two measurements differ by more than 50 mm (2 in.), verify working surface to be level, and test again.
- Calculate the average of the two measured diameters and report to the nearest 5 mm (0.25 in.).

IV. AIR CONTENT OF CLSM

The air content test shall be according to Illinois Modified AASHTO T 121 or Illinois Modified AASHTO T 152, except the bowl shall be filled in one lift without vibration, rodding, or tapping.

V. COMPRESSIVE STRENGTH OF CLSM

Compressive strength test specimens shall be made and cured according to Illinois Modified AASHTO T 23, except for the following:

- The 152 mm x 305 mm (6 in. x 12 in.) cylinders shall be filled in one lift without vibration, rodding, or tapping. When bleed water appears at the top of the mold after a few minutes, the mold shall be refilled.

- The curing method shall be modified by not removing the covered specimen from the mold until the time of testing.

Compressive strength test specimens shall be tested according to Illinois Modified AASHTO T 22, except for the following:

- Neoprene caps shall be used for compressive testing, and a wire brush may be used to flatten test specimens that are not plane.

- The compression machine loading rate shall be 20 ± 10 kPa/s (3 ± 2 psi/s).

- Strength is defined as the average of two or more cylinder breaks.

- Compressive strength shall be calculated to the nearest 1.0 kPa (1.0 psi).

Dynamic Cone Penetration (DCP)

1.0 GENERAL

1.1 This method covers the procedure for conducting the DCP test on treated and untreated subgrade materials.

1.2 This method does not address safety problems associated with using the DCP equipment. It is the operator's responsibility to determine the limitations prior to its use. At a minimum, the operator is cautioned not to hold the DCP from the anvil, to avoid injury to the fingers by the falling hammer.

2.0 SIGNIFICANCE AND USE

2.1 The DCP is used to indirectly determine the immediate bearing value (IBV) of treated or untreated subgrade material (Note 1).

2.2 The IBV is used to evaluate the subgrade stability, and to determine the depth of subgrade treatment according to the Department's Subgrade Stability Manual.

NOTE 1 – The IBV is considered to be equivalent to the in situ Illinois Bearing Ratio (IBR), or the laboratory IBR obtained immediately after compacting the material, without soaking.

3.0 REFERENCED DOCUMENTS

3.1 ASTM D 4429 (latest edition), "Standard Test Method for CBR (California Bearing Ratio) of Soils in Place"

IDOT, Geotechnical Manual (latest edition), Attachment II-A, "Method of Determining the IBR and the IBV of Soils, Treated Soils and Aggregates"

IDOT, Subgrade Stability Manual (latest edition).

Sowers, G.F. and Hedges, C.S. (1966), "Dynamic Cone for Shallow In Situ Penetration Testing", Vane Shear and Cone Penetration Resistance Testing of In Situ Soils, ASTM STP 399.

Livneh, M. and Ishai, I. (1987), "Pavement and Material Evaluation by a Dynamic Cone Penetrometer", Sixth International Conference on the Structural Design of Asphalt Pavement, Ann Arbor, Michigan.

Maur, M.C. and de Beer, M. (1988), "Computer Programs to Plot DCP Data – Users Manual", Division of Roads and Transport Technology, Pretoria.

4.0 EQUIPMENT

4.1 Material: The DCP components shall be made of stainless steel.

4.2 As shown on Figure 1, the DCP consists of:

a) A 60-degree *cone*, with 20 mm (0.787 in.) base diameter (Note 2).

b) A graduated *rod*, 1 m (40 in.) long (variable), 16 mm (5/8 in.) diameter, with 5 mm (0.2 in.) graduations. The rod should be threaded on both ends to allow for attachment to the cone on one end and the anvil on the other end. A ruler may be used for measuring the cone penetration, in lieu of having graduations on the rod. Refer to ASTM D 6951 for a picture that shows the device with a ruler attached.

c) An 8 kg (17.6 lb) sliding *hammer*, which slides along a 16 mm (5/8 in.) diameter *upper rod*, whose length should accommodate for the hammer length and a free fall of 575 mm (22.6 in.). The upper rod is threaded (or welded) to a driving *anvil* on one end and to a *handle* on the other end.

Note 2 – A disposable cone, meeting the requirements of 4.2 a), may be used in hard materials to avoid damage to the equipment, which may be caused by driving the hammer upward in an attempt to extract the cone from the ground.

4.3 A mechanically operated device mounted on a truck is also acceptable.

5.0 TEST PROCEDURE

5.1 Check the DCP components for deficiencies, replace any damaged part, and assemble the equipment as shown in Figure 1.

5.2 Hold the DCP vertically, from the handle, and seat the cone such that the cone base is flush with the surface of the material to be tested. The initial (reference) reading will be taken from the cone base (Note 3). A straight edge next to the DCP will make a good reference point. Do not record the number of blows required to seat the cone.

Note 3 – In soft materials, the cone might penetrate into a depth beyond the cone base under the hammer weight. In this case, record the current reading, under the hammer weight, as the initial reference point.

5.3 Raise the hammer carefully all the way to the top, without impacting the handle, and let it drop freely on the anvil to drive the cone into the material. The cone will penetrate the material to a depth which depends on the material resistance.

5.4 Measure the number of blows for every 150 mm (6 in.) penetration into the material, or measure the amount of penetration after each blow if the single blow penetration is greater than 150 mm (6 in.). This may depend on the material variability and resistance. Penetration readings <u>are</u> recorded to the nearest 5 mm (0.2 in.).

5.5 Repeat the procedure in 5.3 and 5.4 to the desired depth into the material. A depth of 900 mm (36 in.) is typical.

6.0 CALCULATIONS

6.1 The penetration rate (PR), inches per blow, is the amount of penetration (150 mm (6 in.)) divided by the number of blows in that increment. If the single blow penetration is greater than 150 mm (6 in.), the PR is the amount of penetration per blow. The PR value is recorded to the nearest 5 mm (0.2 in.) per blow. (Note 4)

Note 4 – Layers of the subgrade that have similar PR values should be averaged to determine the PR for each layer. Engineering judgment will be necessary to group the PR values and assess the validity of high or low penetrations.

6.2 Using the average PR value and Figure 2, obtain the equivalent IBV for each 150 mm (6 in.). The IBV may be used to obtain an equivalent compressive strength (Q_u) as indicated on the DCP form (BMPR SL30).

6.3 Use the attached DCP form (BMPR SL30) to record all data obtained from 6.2 at different stations.

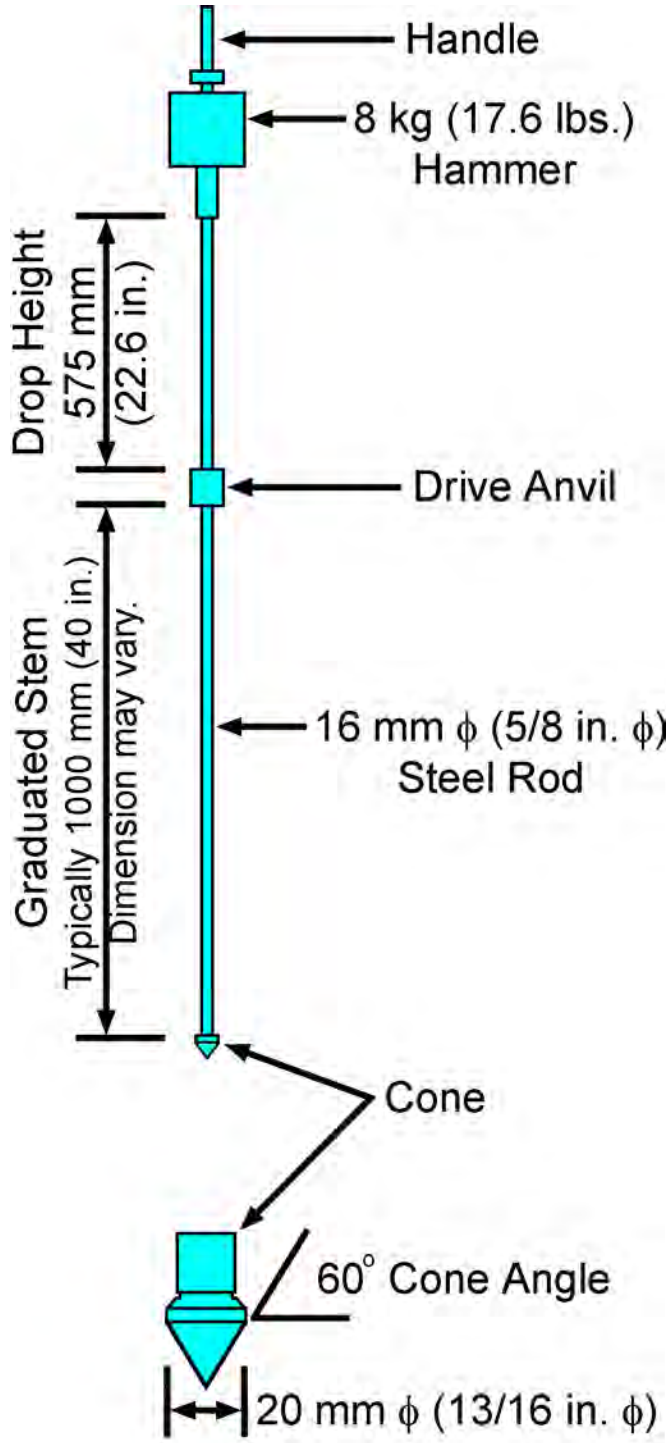

Figure 1 – The DCP equipment.

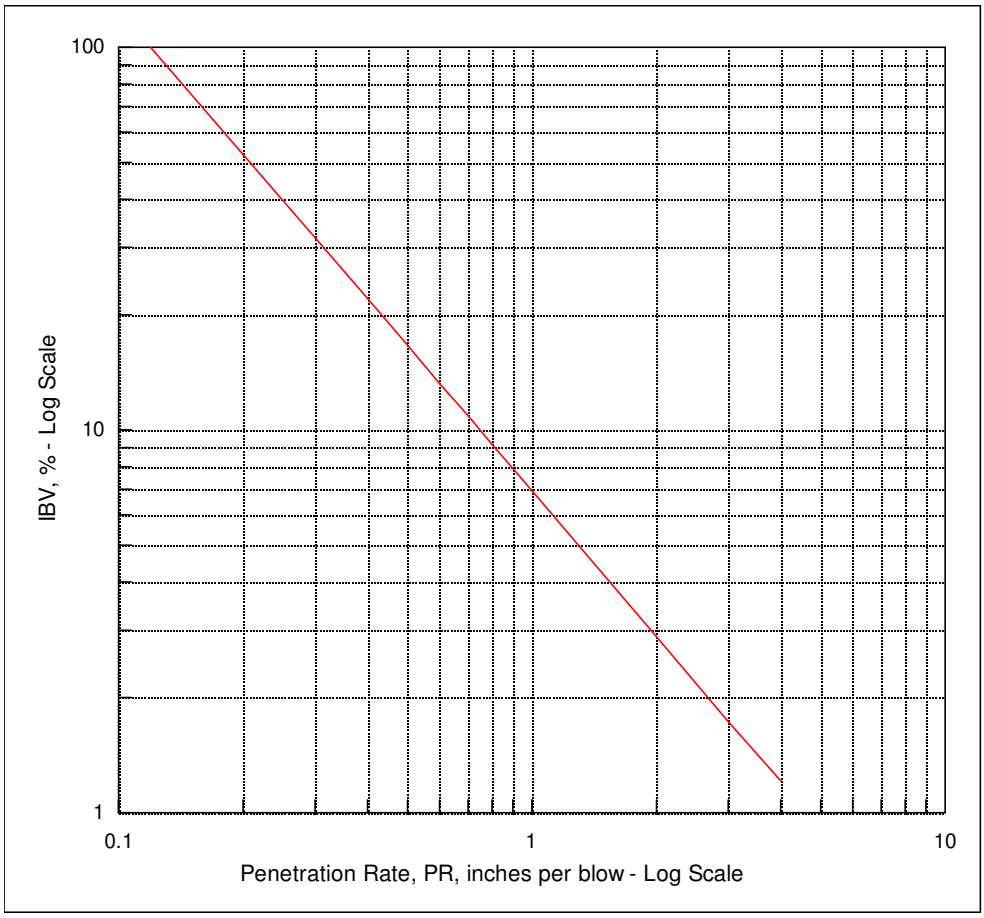

$$IBV = 10^{0.84 - 1.26 \times LOG\,[PR\ (inches/blow)]}$$

Figure 2 – The IBV as a function of the penetration rate (PR).

Illinois Department of Transportation

Dynamic Cone Penetration Test

Date: _____ County: _____

Weather: _____ Section: _____

Inspector: _____ Route: _____

Company (Consultants): _____ District: _____

Design No.: _____ Contract No.: _____

Sheet No.: _____ Job No.: _____

Contractor: _____ Project: _____

Test Location [a] and Remarks [b]	Initial Depth	☐ Subgrade ☐ Foundation						
		Depth [c]						
		Blows						
		Rate [d]						
		IBV						
		Q_u						
		Depth						
		Blows						
		Rate						
		IBV						
		Q_u						
		Depth						
		Blows						
		Rate						
		IBV						
		Q_u						
		Depth						
		Blows						
		Rate						
		IBV						
		Q_u						
		Depth						
		Blows						
		Rate						
		IBV						
		Q_u						

[a] Indicate station and offset.
[b] Include soil type, moisture, rutting, or cut/fill information as applicable.
[c] Depth is cumulative in inches.
[d] Rate is inches of penetration per blow.

Comments:

Rate	IBV	Q_u*	Rate	IBV	Q_u*
0.5	17	5.4	1.3	5	1.6
0.6	13	4.2	1.5	4	1.3
0.7	11	3.5	2.0	3	1.0
0.8	9	2.9	2.6	2	0.6
0.9	8	2.6	3.0	1.7	0.5
1.0	7	2.2	3.3	1.5	0.5
1.1	6	1.9	4.6	1	0.3
1.2	5.5	1.8	>4.6	<1	<0.3

*Q_u value calculated from IBV whole number.

$IBV = 10^{0.84 - 1.26 \times LOG(Rate)}$ Q_u (tsf) = 0.32 x IBV

Static Cone Penetration (SCP)

1.0 GENERAL

1.1 This method covers the procedure for conducting the SCP test on treated and untreated subgrade materials.

1.2 This method does not address safety problems associated with using the SCP equipment. It is the operators responsibility to determine the equipment limitations prior to its use.

2.0 SIGNIFICANCE AND USE

2.1 The SCP is used to determine the cone index (CI) of treated or untreated subgrade material (Note 1).

2.2 The CI is used to evaluate the subgrade stability, and to determine the depth of subgrade treatment according to the Department's Subgrade Stability Manual.

Note 1 – The CI is a strength value which is equal to the penetrometer load (in pounds) divided by the base area (in.^{2}), and it has the units of psi (not expressed).

3.0 REFERENCED DOCUMENTS

3.1 IDOT, Geotechnical Manual (latest edition), Attachment II-A, "Method of Determining the IBR and the IBV of Soils, Treated Soils and Aggregates"

IDOT, Subgrade Stability Manual (latest edition).

4.0 EQUIPMENT

4.1 Material: The metal components of the SCP shall be made of stainless steel.

4.2 As shown in Figure 1, the SCP consists of:

a) A 30-degree *cone*, with a 315 mm^2 (0.5 in.^{2}) base area.

b) A graduated *rod*, 0.48 m (19 in.) long (variable), 16 mm (5/8 in.) diameter, marked at 150 mm (6 in.) intervals. The bottom 150 mm (6 in.) interval is marked at 25 mm (1 in.) subintervals.

c) A 150 lb capacity proving ring with a handle and a factory calibrated dial indicator, calibrated direct 0 to 300 psi in 5 psi increments. Alternatively, a displacement dial indicator may be used with a factory calibrated proving ring and a calibration chart.

5.0 TEST PROCEDURE

5.1 Check the SCP components for deficiencies, replace any damaged part, and follow the manufacturer's recommendations to assemble the equipment as shown in Figure 1 (Note 2).

Note 2 - The dial indicator is a sensitive instrument which should be protected against water, dust, and rough usage. Make sure the dial indicator is on the zero reading prior to the test.

5.2 Hold the SCP vertically, from the handle, and seat the cone such that the cone base is flush with the surface of the material to be tested. The initial (reference) reading will be taken from the cone base (Note 3).

Note 3 – The SCP test should be conducted after the subgrade has been stressed with several passes of a loaded truck. Any crust formed on the subgrade, from drying, must be removed before seating the cone. Crusted subgrades give high readings that do not reflect the strength of the weaker underlying material.

5.3 Holding the handle firmly, push the cone down into the subgrade material at a steady, uniform rate and record the cone index, from the dial indicator readings, every 150 mm (6 in.) of the cone penetrations.

5.4 Continue the procedure in 5.3 until: 1) the maximum depth of 450 mm (18 in.) is reached, or 2) high resistance is encountered, or 3) the maximum ring capacity is reached; whichever occurs first.

5.5 Use the attached SCP form (BMPR SL31) to record the CI values at different depths and stations. Record the CI value to the nearest whole number. The CI can also be converted to an equivalent compressive strength (Q_u) by using the equations on the SCP form (BMPR SL31). Normally, an equivalent IBV is determined.

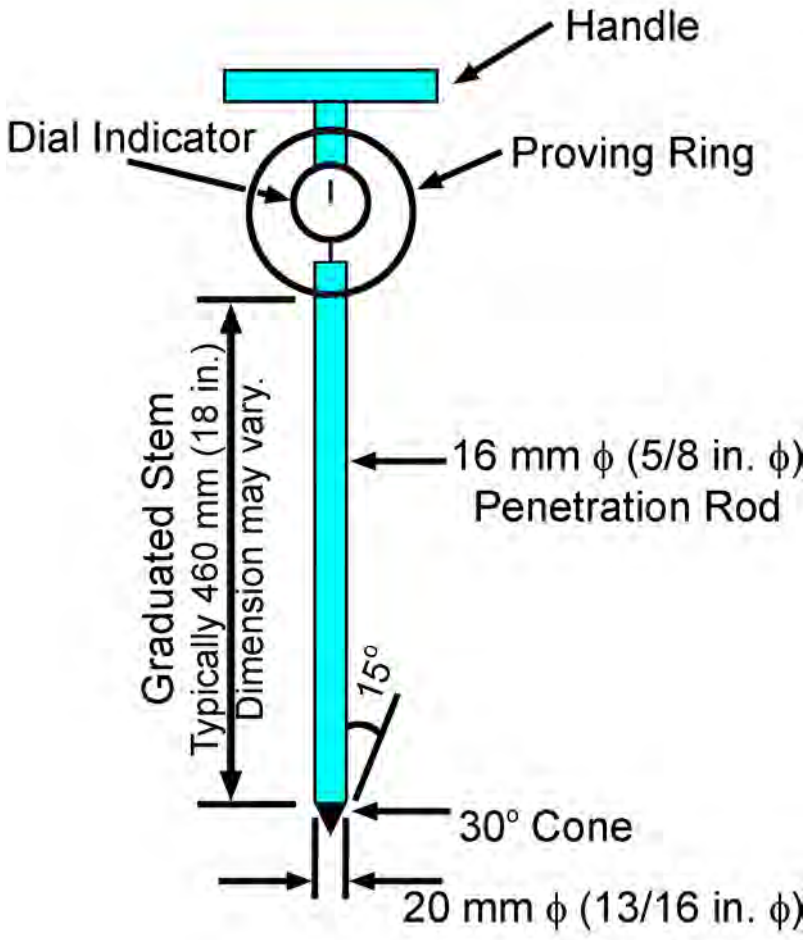

Figure 1 – The SCP equipment.

Illinois Department of Transportation

Static Cone Penetration Test

Date: _____ County: _____

Weather: _____ Section: _____

Inspector: _____ Route: _____

Company (Consultants): _____ District: _____

Design No.: _____ Contract No.: _____

Sheet No.: _____ Job No.: _____

Contractor: _____ Project: _____

☐ Subgrade ☐ Foundation

Test Location [a] and Remarks [b]						
	Depth [c]					
	Dial Reading [d]					
	IBV					
	Q_u					
	Depth					
	Dial Reading					
	IBV					
	Q_u					
	Depth					
	Dial Reading					
	IBV					
	Q_u					
	Depth					
	Dial Reading					
	IBV					
	Q_u					
	Depth					
	Dial Reading					
	IBV					
	Q_u					
	Depth					
	Dial Reading					
	IBV					
	Q_u					
	Depth					
	Dial Reading					
	IBV					
	Q_u					

[a] Indicate station and offset.
[b] Include soil type, moisture, rutting, or cut/fill information as applicable.
[c] Depth is cumulative in inches.
[d] Dial Reading = Cone Index (CI)

IBV = CI ÷ 40
Q_u (tsf) = 0.32 x IBV

Cone Index	IBV	Q_u*
320	8	2.6
280	7	2.2
240	6	1.9
200	5	1.6
160	4	1.3
120	3	1.0
80	2	0.6
40	1	0.3

*Q_u value calculated from IBV whole number.

Comments:

ILLINOIS TEST PROCEDURE 4791

FLAT PARTICLES, ELONGATED PARTICLES, OR FLAT AND ELONGATED PARTICLES IN COARSE AGGREGATE

Effective Date: June 1, 2012

1 SCOPE

1.1 This test procedure covers the determination of the percentages of flat particles, elongated particles, or flat and elongated particles in coarse aggregates.

1.2 The values stated in inch-pound units are to be regarded as standard. The values given in parentheses are mathematical conversions to SI units that are provided for information only and are not considered standard.

1.2.1 *Exception* – (*Regarding sieves*, *per A*STM E 11. The values stated in SI units shall be considered standard for the dimensions of the wire cloth openings and the diameter of the wires used in the wire cloth. When sieve mesh sizes are referenced, the alternate inch-pound designations are provided for information purposes and enclosed in parentheses.

1.3 *This standard does not purport to address all of the safety concerns, if any, associated with its use. It is the responsibility of the user of this procedure to establish appropriate safety and health practices and determine the applicability of regulatory limitations prior to use.*

2 REFERENCED DOCUMENTS

2.1 Illinois Test Procedures (ITP):

- ITP 2, Sampling of Aggregate
- ITP 27, Sieve Analysis of Fine and Coarse Aggregate
- ITP 248, Reducing Field Samples of Aggregate to Testing Size

2.2 *ASTM Standards*[1]*:*

- C670, Practice for Preparing Precision and Bias Statements for Test Methods for Construction Materials
- E 11, Woven Wire Test Sieve Cloth and Test Sieves

[1] For reference ASTM standards, visit the ASTM website, www.astm.org or contact ASTM Customer Service as service #astm.org. For *Annual book of ASTM Standards* volume information, refer to the standard's Document Summary page on the ASTM website.

ILLINOIS TEST PROCEDURE 4791

FLAT PARTICLES, ELONGATED PARTICLES, OR FLAT AND ELONGATED PARTICLES IN COARSE AGGREGATE

Effective Date: June 1, 2012

3 TERMINOLOGY

3.1 *Definitions*:

3.1.1 *Elongated Particles of Aggregate* – those particles of aggregate having a ratio of length to width greater than a specified value.

3.1.2 *Flat and Elongated Particles of Aggregate* – those particles having a ratio of length to thickness greater than a specified value.

3.1.3 *Flat Particles of Aggregate* – those particles of aggregate having a ratio of width to thickness greater than a specified value.

3.1.4 *Length* – maximum dimension of the particle, as illustrated in Fig. 1.

3.1.5 *Thickness* – minimum dimension of the particle. It is the maximum dimension perpendicular to the length and width as illustrated in Fig. 1.

3.1.6 Width – intermediate dimension of the particle. It is the maximum dimension in the plane perpendicular to the length and thickness. The width dimensions is greater than or equal to the thickness as illustrated in Fig.1.

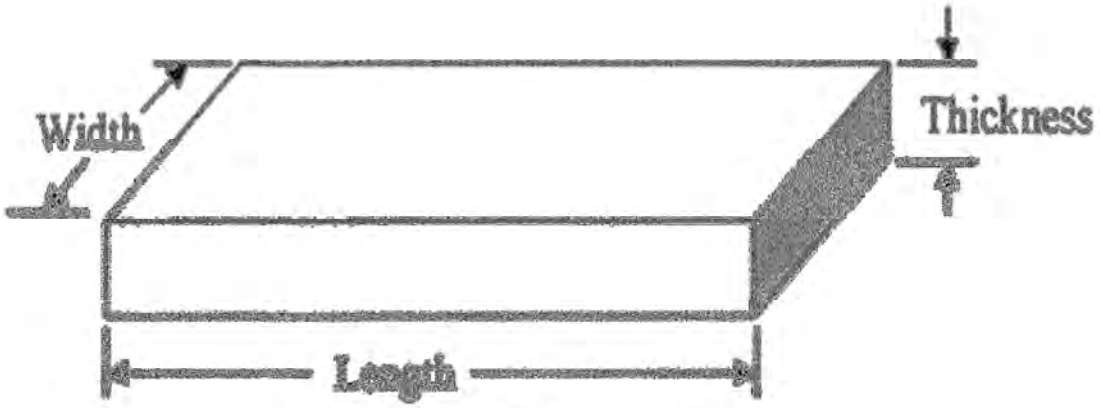

FIG. 1 Particle Dimensions

ILLINOIS TEST PROCEDURE 4791

FLAT PARTICLES, ELONGATED PARTICLES, OR FLAT AND ELONGATED PARTICLES IN COARSE AGGREGATE

Effective Date: June 1, 2012

4 SUMMARY OF TEST METHOD

4.1 Individual particles of aggregate of specific sieve sizes are measured to determine the ratios of width to thickness, length to width, or length to thickness.

5 SIGNIFICANCE AND USE

5.1 The particles shape of coarse aggregates influences the properties of some construction materials and may affect their placement and consolidation.

5.2 This test method provides a means for checking compliance with specifications that limit such particles or to determine the relative shape characteristics of coarse aggregates.

6 APPARATUS

6.1 The apparatus used shall be equipment suitable for testing aggregate particles for compliance with the definitions in 3.1, at the dimensional ratios desired.

6.1.1 *Proportional Caliper Device* – The proportional caliper devices illustrated in Fig. 2 and Fig. 3, are examples of devices suitable for this test method. The device illustrated in Fig. 2 and Fig. 3 consists of a base plate with two fixed posts and a swinging arm mounted between them so that the openings between the arms and the posts maintain a constant ratio. The axis position can be adjusted to provide the desired ratio of opening dimensions, Fig. 2 illustrates a device on which ratios of 1:2, 1:3, and 1:5 may be set. (see Note 1)

6.1.1.1 *Verification of Ratio* – The ratio settings on the proportional caliper device shall be verified by the use of a machined block, micrometer, or other appropriate device.

6.1.2 Balance – The balance or scales used shall be accurate to 0.5% of the mass of the sample.

Note 1 – Fig. 2 and 3 provide examples of possible devices that may be used for this test. Other devices may be found suitable if they are able to meet the verification requirements listed in 6.1.1.1.

ILLINOIS TEST PROCEDURE 4791

FLAT PARTICLES, ELONGATED PARTICLES, OR FLAT AND ELONGATED PARTICLES IN COARSE AGGREGATE

Effective Date: June 1, 2012

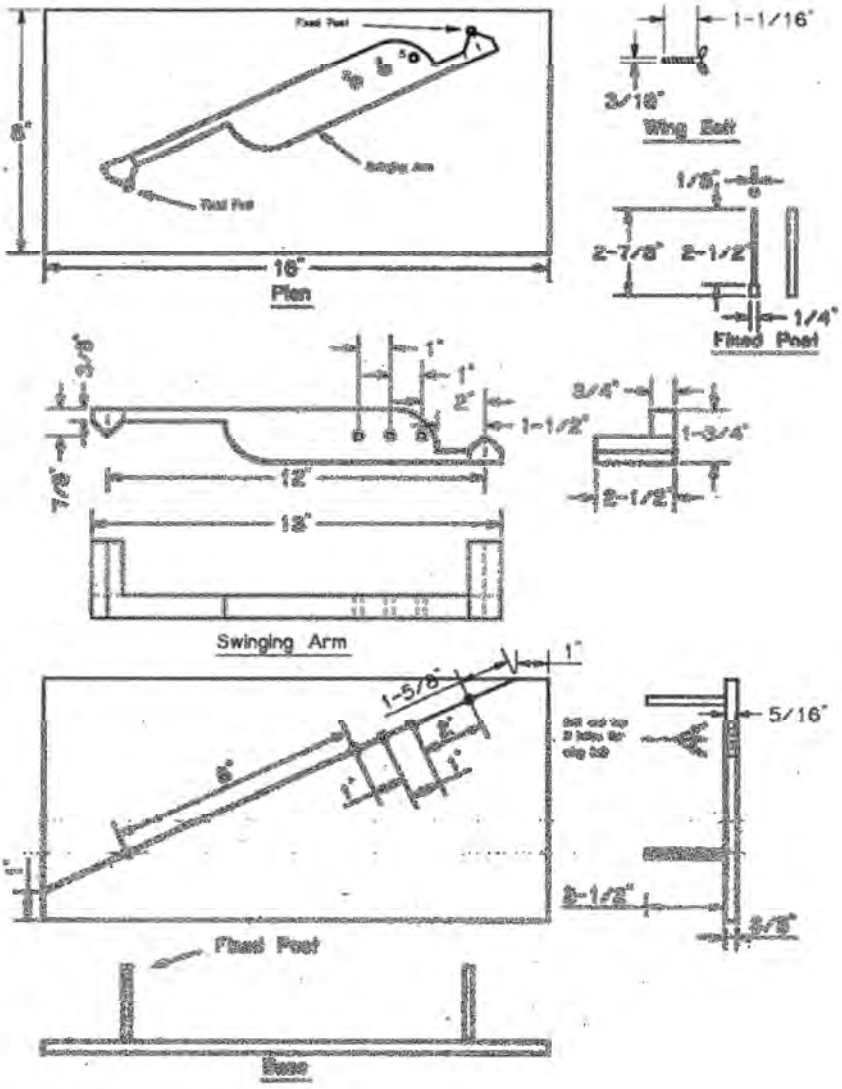

Metric Equivalents			
in.	(mm)	in.	(mm
¼	(3.2)	1⅝	(41.0)
5/16	(4.8)	1¾	(44.5)
½	(6.35)	2	(50.8)
9/16	(7.9)	2½	(63.5)
⅝	(9.5)	2¾	(70.0)
¾	(19.1)	3½	(88.9)
⅞	(22.2)	5	(127.0)
1	(25.4)	12	(304.8)
1 1/16	(27.0)	13	(330.2)
1½	(38.0)	16	(406.4)

FIG. 2 Proportional Caliper

ILLINOIS TEST PROCEDURE 4791

FLAT PARTICLES, ELONGATED PARTICLES, OR FLAT AND ELONGATED PARTICLES IN COARSE AGGREGATE

Effective Date: June 1, 2012

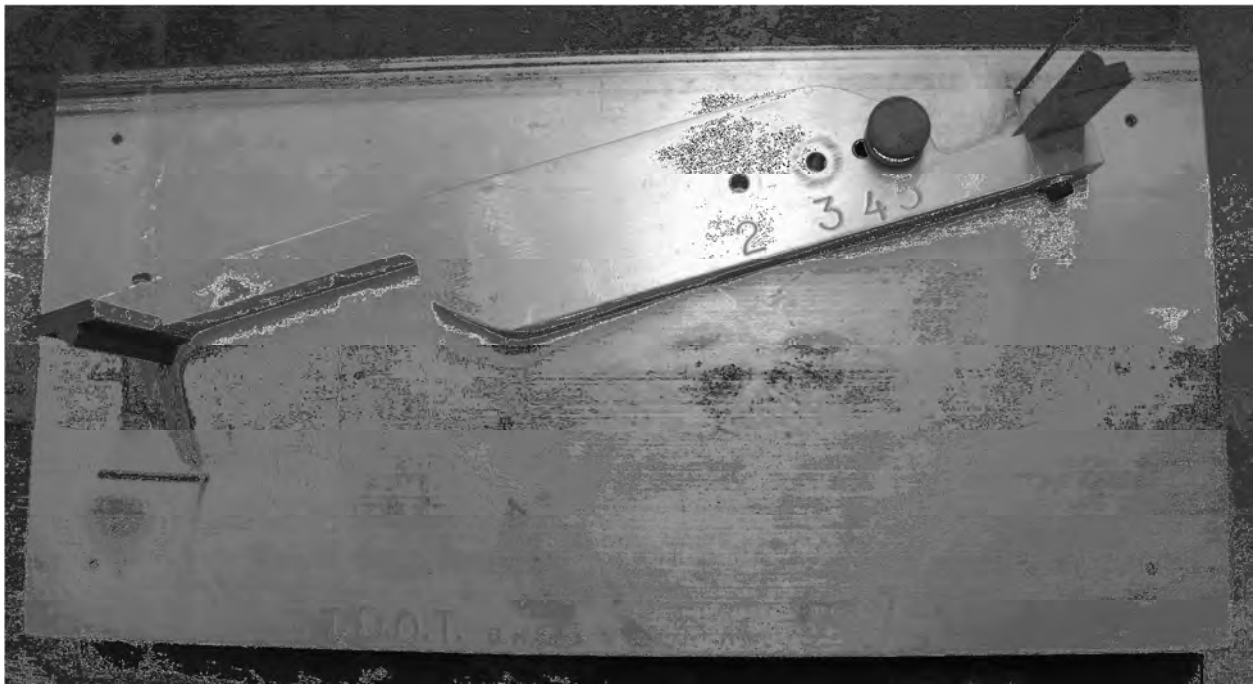

FIG. 3 Proportional Caliper

7 SAMPLING

7.1 Sample the coarse aggregate according to ITP 2. The field sample size shall meet the minimum requirements in Illinois Specification 201.

7.2 Field samples of aggregate shall be reduced to approximate test sample size before testing according to ITP 248. Reduction to an exact predetermined mass shall not be permitted. Sieve the approximate test sample according to ITP 27 and retain all plus 4.75mm (No. 4) material as the test sample. The mass of the test samples shall conform to the following:

ILLINOIS TEST PROCEDURE 4791

FLAT PARTICLES, ELONGATED PARTICLES, OR FLAT AND ELONGATED PARTICLES IN COARSE AGGREGATE

Effective Date: June 1, 2012

Nominal Maximum Size Square Openings, mm (in.)	Minimum Mass of Test Sample, kg (lb)
9.5 (3/8)	0.5 (1)
12.5 (1/2)	0.5 (1)
19.0 (3/4)	1.25 (3)
25.0 (1)	1.25 (3)
37.5 (1 ½)	2.5 (5.5)
50.0 (2)	5.0 (11)
63.0 (2 ½)	5.0 (11)
75.0 (3)	7.5 (16.5)

8 PROCEDURE

8.1 The test sample shall be dried back to constant mass in an oven specifically designed for drying, set at and capable of maintaining a uniform temperature of 110±5˚C (230±9˚F). Constant mass is defined as the sample mass at which there has not been more than a 0.5 gram mass loss during one hour of drying. This should be verified occasionally.

8.2 Flat Particle Test and Elongated Particle Test – Test each of the particles in the test sample and place in one of three groups: (1) Flat, (2) Elongated, (3) Neither flat nor elongated.

8.2.1 Use the proportional caliper device, positioned at the proper ratio, shown in Fig. 4, as follows:

8.2.1.1 *Flat Particle Test*- Set the larger opening equal to the maximum particle width. The particle is flat if the maximum thickness can be placed though the smaller opening.

8.2.1.2 Elongated Particle Test – Set the larger opening equal to the maximum particle length. The particle is elongated if the maximum width can be placed through the smaller opening.

8.2.2 Determine the mass of each group.

8.3 Flat and Elongated Particle Test – Test each of the particles in the test sample and place in one of two groups: (1) flat and elongated or (2) not flat and elongated.

ILLINOIS TEST PROCEDURE 4791

FLAT PARTICLES, ELONGATED PARTICLES, OR FLAT AND ELONGATED PARTICLES IN COARSE AGGREGATE

Effective Date: June 1, 2012

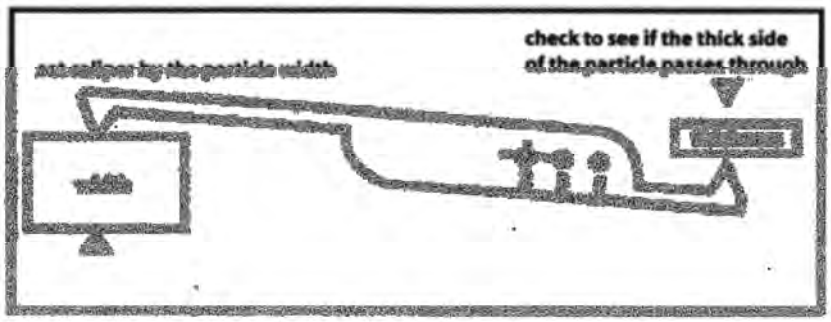

flat particle test

a. Test for flatness

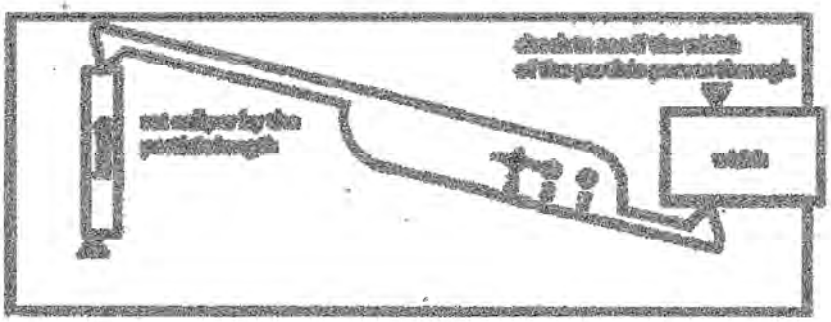

elongated particle test

b. Test for elongation

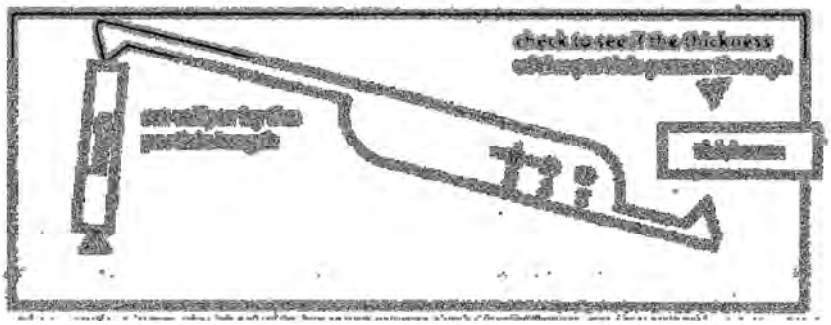

flat and elongated particle test

c. Test for elongation and flatness

FIG. 4 Use of Proportional Caliper

8.3.1 Use the proportional caliper device, positioned at the proper ratio, shown in Fig. 4, as follows:

8.3.1.1 *Flat and Elongated Particle Test* – Set the larger opening equal to the maximum particle length. The particle is considered flat and elongated if the maximum thickness can be placed through the smaller opening.

8.3.2 After the particles have been classified into the groups described in 8.3, determine the proportion of the sample in each group by count or mass, as required. The particle is flat and elongated if the particle thickness can be completely passed through the smaller opening.

8.3.3 Determine the mass of each group.

9 Calculation

9.1 Calculate the percentage of flat, elongated, and/or flat and elongated particles to the nearest 1 percent in using the following formula:

$$\% = \frac{GM}{TSM} \text{ X } 100$$

where:
GM = each group mass, and
TSM = test sample mass.

10 Report

10.1 Include the following information in the report:

10.1.1 Identification of the coarse aggregate tested, and

10.1.2 Grading of the original aggregate sample, showing percentage retained on each sieve.

10.1.3 Percentages, calculated by mass for: (1) flat particles, (2) elongated particles, and (3) total flat and elongated particles,

10.1.3.1 The dimensional ratios used in the tests.

11 Precision and Bias

11.1 Precision – The precision values listed in Table 1, and Table 2, and Table 3 are averages obtained from AMRL proficiency samples used in the Aggregate Proficiency Sample Program (see Note 2). The 1S % and D2S % limits provided are described in Practice C670.

Note 2 - A 1:3 ratio was used.

TABLE 1 19.0-mm to 12-5mm Flat and Elongated (Percent)

Precision	Test Result (%)	(1S) %	(D2S) %
Single Operator	2.7	51.2	144.8
Multi-laboratory		88.5	250.3

TABLE 2 12.5-mm to 9-5mm Flat and Elongated (Percent)

Precision	Test Result (%)	(1S) %	(D2S) %
Single Operator	34.9	22.9	64.7
Multi-laboratory		43.0	121.8

TABLE 3 9.5-mm to 4.75mm Flat and Elongated (Percent)

Precision	Test Result (%)	(1S) %	(D2S) %
Single Operator	24.1	19.0	53.6
Multi-laboratory		46.1	130.3†

†Value corrected

11.2 *Bias* – Since there is no accepted reference material suitable for determining the bias for this test method, no statement on bias is being made.

This Page Reserved

ILLINOIS TEST PROCEDURE 5821

DETERMINING THE PERCENTAGE OF FRACTURED PARTICLES IN COARSE AGGREGATE

Effective Date: June 1, 2012

1 Scope

1.1 This test procedure covers the determination of the percentage, by mass of a coarse aggregate sample that consists of fractured particles meeting specified requirements.

1.2 The values stated in SI units are to be regarded as the standard. The values in parentheses are provided for information only.

1.3 *This standard does not purport to address all of the safety concerns, if any, associated with its use. It is the responsibility of the user of this procedure to establish appropriate safety and health practices and determine the applicability of regulatory limitations prior to use.*

2 Referenced Documents

2.1 Illinois Test Procedures (ITP):

- ITP 2, Sampling of Aggregate
- ITP 27, Sieve Analysis of Fine and Coarse Aggregate
- ITP 248, Reducing Field Samples of Aggregate to Testing Size

2.2 ASTM Standards:

- E 11, Woven Wire Test Sieve Cloth and Test Sieves

3 Terminology

3.1 Definitions:

3.1.1 Fractured face, n – a broken surface of an aggregate particle created by crushing.

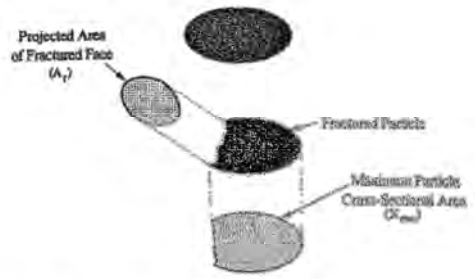

A face will be considered a "Fractured Face" only if it has : $A_f > 0.25\ X_{max}$

FIG. 1 Schematic of a Fractured Particle with One Fractured Face

3.1.2 *fractured particle*, n – a particle of aggregate having at least the minimum number of fractured faces specified (usually one or two)

4 Significance and Use

4.1 Some specifications contain requirements relating to percentage of fractured particles in coarse aggregates. One purpose of such requirements is to maximize shear strength by increasing inter-particle friction in either bound or unbound aggregate mixtures. Another purpose is to provide stability for surface treatment aggregates and to provide increased friction and texture for aggregates used in pavement surface courses. This test method provides a standard procedure for determining the acceptability of coarse aggregate with respect to such requirements.

4.2 Specifications differ as to the number of fractured faces required on a fractured particle, and they also differ as to whether percentage by mass or percentage by particle count shall be used. If the specification does not specify, use the criterion of at least one fractured face and calculate percentage by mass.

5 Apparatus

5.1 *Balance* – A balance or scale accurate and readable to within 0.1% of the test sample mass at any point within the range of use.

5.2 *Sieves* – Sieves conforming to ASMT E 11.

5.3 *Splitter* – A sample splitter suitable for dividing field samples into test portion sizes in accordance with ITP 248.

5.4 Forceps or similar tool to aid in sorting.

5.5 Other Apparatus – A lighted magnifying lamp.

5.6 Oven – An oven of sufficient size, capable of maintaining a uniform temperature of 110±5˚C (230±9˚F). The oven shall be specifically designed for drying.

6 Sampling

6.1 Sample the aggregate in accordance with ITP 2.

7 Sample Preparation

7.1 Dry the sample sufficiently to obtain a clean separation of fine and coarse material in the sieving operation. Sieve the sample over the 1.75mm (No. 4) sieve in accordance with ITP 27 and then reduce the portion retained on the sieve using a splitter in accordance with ITP 248 to appropriate size for test.

7.2 The mass of the test sample shall be at least large enough so that the largest particle is not more than 1% of the sample mass; or the test sample shall be at least as large as indicated below, whichever is smaller.

Gradation	Sample Size
CA01 through CA05	4250g ± 750g
CA06 through CA12	2500g ± 500g
CA13 through CA20	1250g ± 250g

8 Procedure

8.1 Wash the sample over the sieve designated for determination of fractured particle to remove any remaining fine material, and dry to constant mass. Constant mass is defined as the sample at which there has not been more than a 0.5 gram mass loss during 1 hour of drying. This should be verified occasionally. Determine the mass of the test sample, and any subsequent determinations of mass, to the nearest 0.1% of the original dry sample mass.

8.2 Spread the dried test sample on a clean flat surface large enough to permit careful inspection of each particle. To verify that a particle meets the fracture criteria, hold the aggregate particle so that the face is viewed directly. If the face constitutes at least one quarter of the maximum cross-sectional area of the rock particle, consider it a fractured face.

8.3 Hand-examine each individual particle of the sample to determine if it is fractured. Separate the particles into specified categories: (1) fractured particles based on whether the particle has the required number of fractured faces, (2) particles not meeting the specified criteria.

8.4 Determine the mass of particles in the fractured particle category, and the mass of the particles not meeting the specified fracture criteria. Use mass to calculate percent fractured particles.

9 Report

9.1 Report the mass percentage of the particles with the specified number(s) of fractured faces to the nearest 0.1% in accordance with the following:

$$P = \left(\frac{F}{Q}\right) x\ 100$$

where:
P=percentage of particles with the specified number of fractured faces,
F=Mass of fractured particles with at least the specified number of fractured faces,
Q=total mass of original test specimen.

9.2 Report the specified fracture criteria against which the sample was evaluated.

9.3 Report the total mass in grams of the coarse aggregate sample tested.

9.4 Report the sieve on which the test sample was retained at the start of the test.

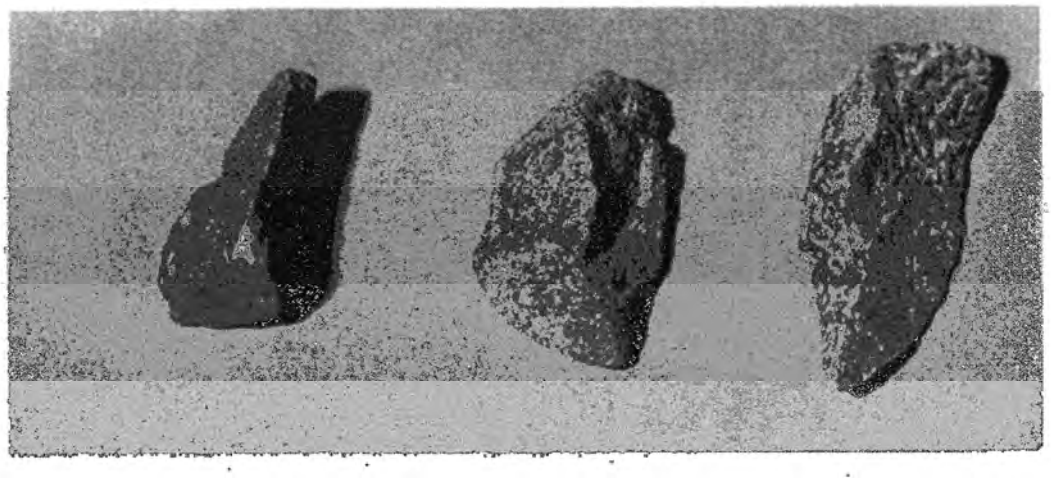

FIG. 2 Fractured Particles (Sharp Edges, Rough Surfaces)

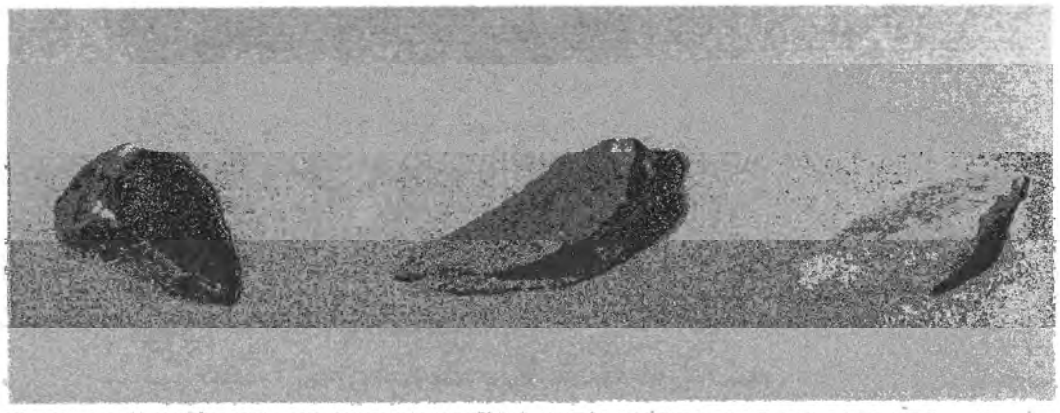

FIG. 3 Fractured Particles (Sharp Edges, Smooth Surfaces)

ILLINOIS TEST PROCEDURE 5821

DETERMINING THE PERCENTAGE OF FRACTURED PARTICLES IN COARSE AGGREGATE

Effective Date: June 1, 2012

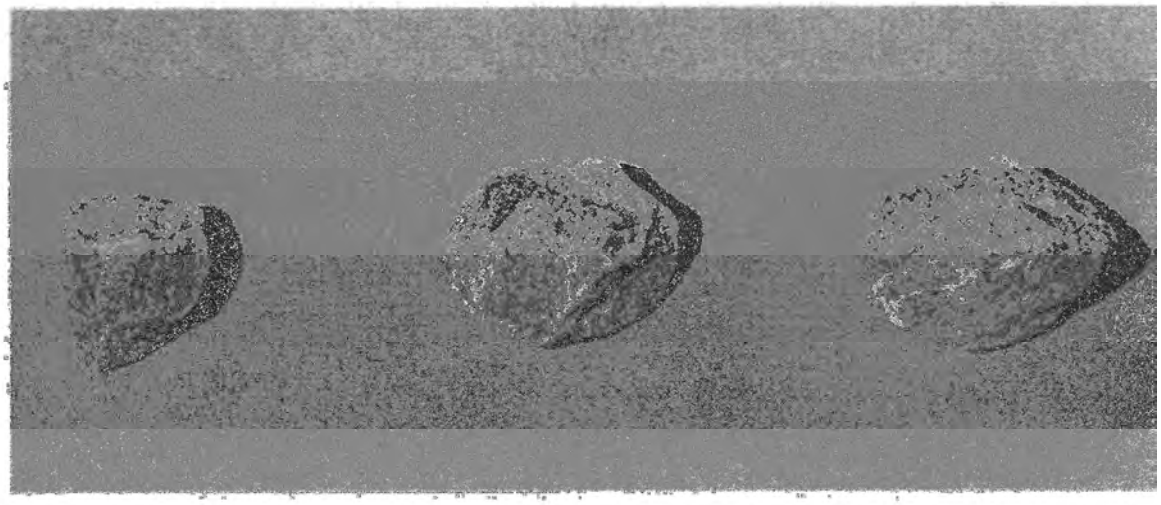

FIG. 4 Fractured Particles (Round Edges, Rough Surfaces)

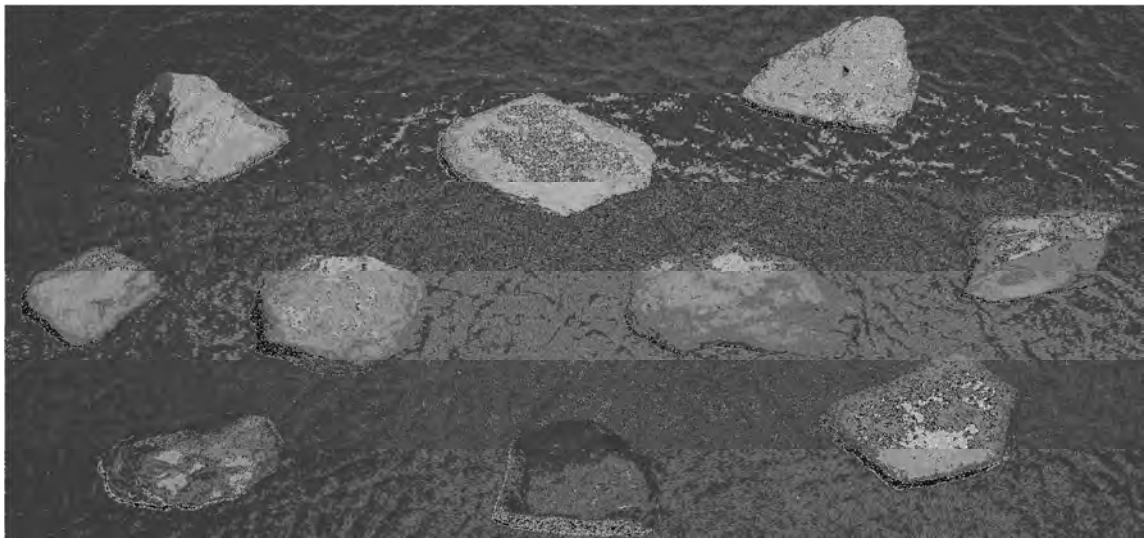

FIG. 5 Fractured Particles (Rough Edges, Smooth Surfaces)

DETERMINING THE PERCENTAGE OF FRACTURED PARTICLES IN COARSE AGGREGATE

Effective Date: June 1, 2012

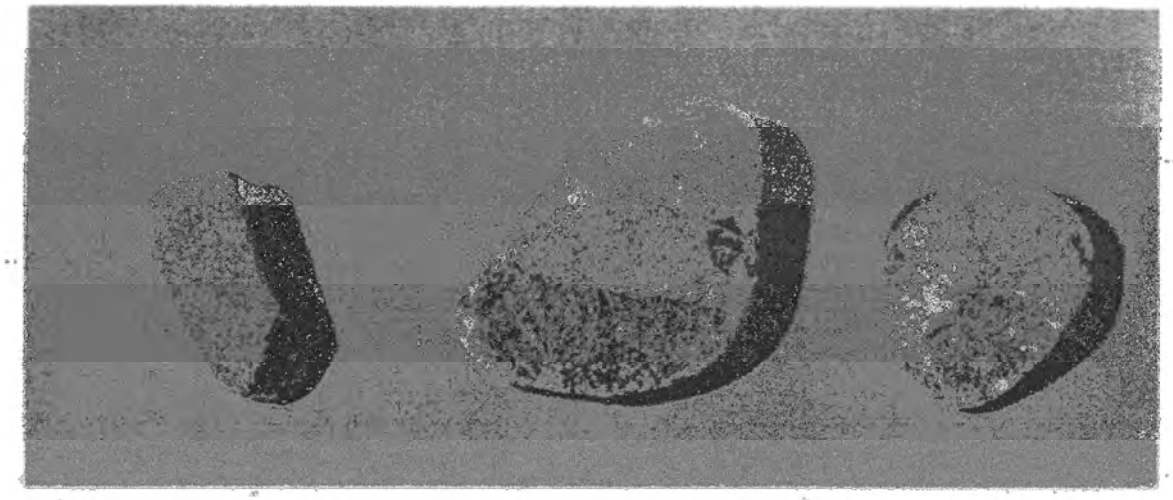

FIG. 6 Fractured Particle (Center) Flanked by Two Non-Fractured Particles (Chipped Only)

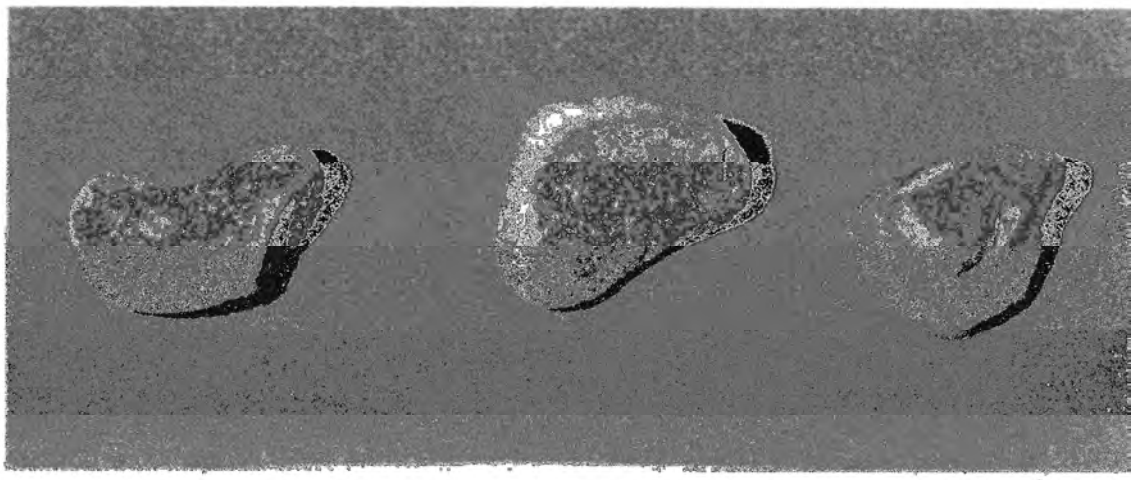

FIG. 7 Non-Fractured Particles (Round Edges, Smooth Surfaces)

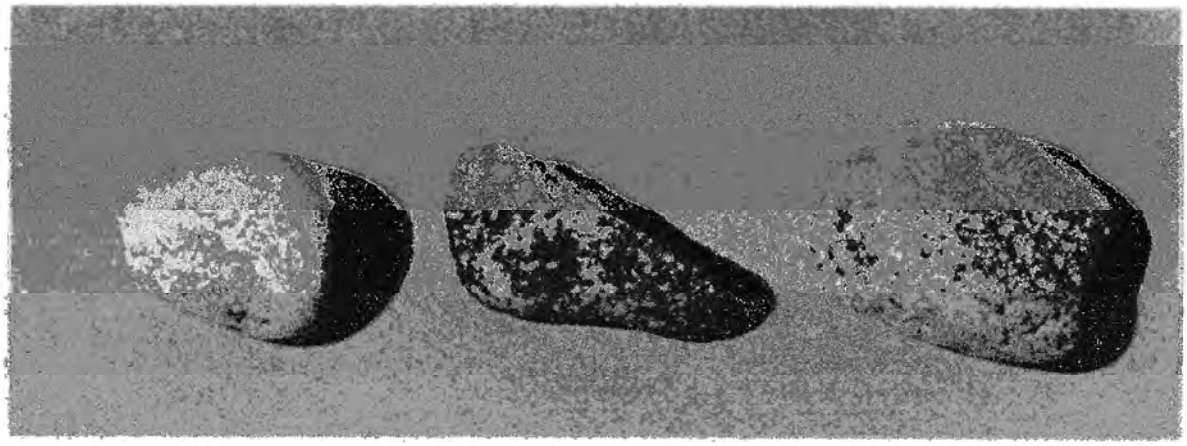

FIG. 8 Non-Fractured Particles (Rounded Particles, Smooth Surfaces)

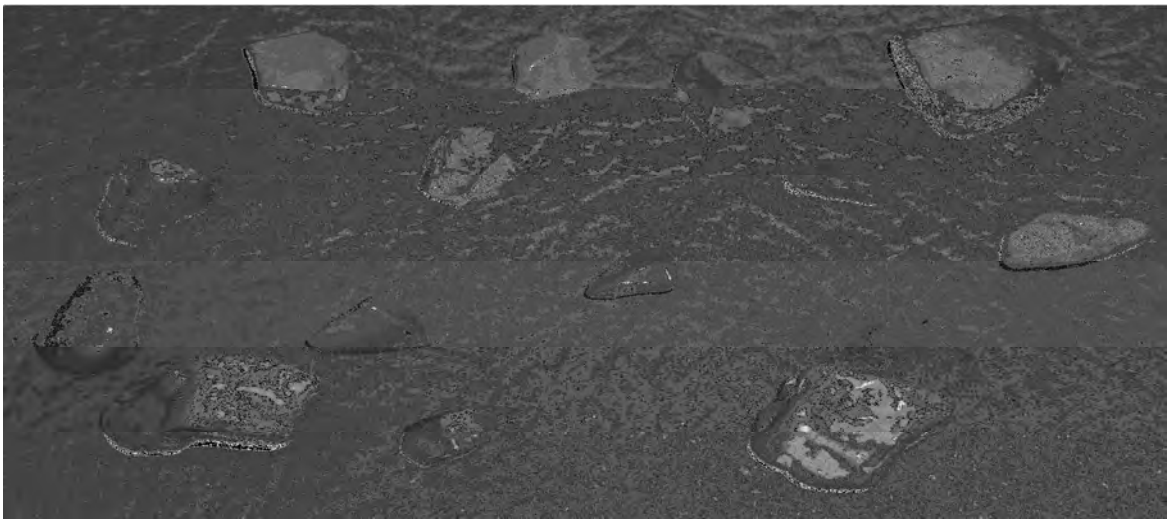

FIG. 9 Non-Fractured Particles (Rounded Particles, Smooth Surfaces)

This Page Reserved

Illinois Modified Test Procedure
Effective Date: February 1, 2014

Standard Practice
for
Temperature of Freshly Mixed Hydraulic Cement Concrete

Reference ASTM C 1064/C 1064M-12
(formerly AASHTO T 309)

NOTE: This test method cannot be reproduced here due to copyright. The Contractor shall provide a copy of the ASTM test method to the Engineer if requested.

ASTM Section	***Illinois Modification***
2.1	Replace as follows: AASHTO R 60 (Illinois Modified) for ASTM C172 To maintain brevity in the text, the following will apply: **Example:** AASHTO R 60 (Illinois Modified) will be designated as "R 60."

Standard Test Method
For
Temperature of Freshly Mixed Hydraulic Cement Concrete

Reference ASTM C 1064/C 1064M-12

The ASTM standard test method is not reproduced herein, but a copy is available to individuals who have taken the Portland Cement Concrete Level I Technician Course.

For convenience to the individual using this manual, the ASTM standard test method for measuring the temperature of freshly mixed concrete is summarized as follows.

1. Obtain the concrete sample according to R 60. The sample size shall be sufficient to provide a minimum 75 mm (3 in.) concrete cover around the thermometer sensor in all directions.

2. Use an ASTM approved thermometer which is accurate to ± 0.5° C (±1° F), and has a range that is adequate for concrete temperatures encountered. Refer to the Standard Specifications for Road and Bridge Construction for concrete temperature limitations.

3. Place the thermometer in the concrete sample, which was collected in a damp, non-absorbent container. The thermometer sensor shall be submerged a minimum of 75 mm (3 in.). The concrete temperature may also be measured in placement forms, or anywhere the minimum 75 mm (3 in.) cover is provided.

4. Gently press the concrete around the thermometer to prevent air temperature affects.

5. Read the temperature after a minimum of 2 minutes of when the temperature readings stabilize.

6. Complete the temperature measurement within 5 minutes after obtaining the sample.

7. Record the temperature to the nearest 0.5° C (1° F).

Illinois Modified Test Procedure
Effective Date: June 1, 2012

Standard Method of Test
for
Estimating Concrete Strength by the Maturity Method

Reference ASTM C 1074-11

NOTE: This test method is to be used in conjunction with and according to Illinois Modified AASHTO T 325, "Estimating the Strength of Concrete in Transportation Construction by Maturity Tests". According to Illinois Modified AASHTO T 325, the Contractor shall provide a copy of the ASTM test method to the Engineer if requested, which cannot be reproduced here due to copyright.

ASTM Section	***Illinois Modification***
2.1	Replace as follows: AASHTO T 22 (Illinois Modified) AASHTO T 23 (Illinois Modified) AASHTO T 119 (Illinois Modified) AASHTO T 152 (Illinois Modified) AASHTO T 177 (Illinois Modified) AASHTO T 196 (Illinois Modified) AASHTO T 309 (Illinois Modified) To maintain brevity in the text, the following will apply: **Example:** AASHTO T 22 (Illinois Modified) will be designated as "T 22."
5.1	Replace as follows: This standard can be used to estimate the in-place strength of concrete pavement patches and bridge deck patches. These estimates provide guidance useful in making decisions concerning opening to traffic.
8.1	Replace the first sentence with the following: The batch of concrete from which samples are taken shall be a minimum 2 yd^3 (1.5 m^3) (4 yd^3 (3.0 m^3) recommended), and the project's actual batching and mixing equipment shall be used. Air content shall be within ±0.3% of the maximum allowed by specification.
8.3	Replace with the following: Mold and cure the specimens in accordance with T 23, except specimens shall be moved within 30 minutes of batching to cure in air at 73 ± 3 °F (23 ± 2 °C). Record the slump, air content, and temperature of the concrete. Protect the specimens from disturbance, direct sunlight, and wind.

Standard Method of Test
for
Estimating Concrete Strength by the Maturity Method
(continued)
Reference ASTM C 1074-11

<table>
<tr><th>ASTM Section</th><th>Illinois Modification</th></tr>
<tr><td>8.4</td><td>Revise as follows:
Delete the first sentence. Refer to the following table for suggested test ages for pavement or bridge deck patching:

Table 1. Suggested Test Ages
<table>
<tr><th>2-Day Patch</th><th>1-Day Patch</th></tr>
<tr><th>Age (hours)</th><th>Age (hours)</th></tr>
<tr><td>24</td><td>2</td></tr>
<tr><td>26</td><td>4</td></tr>
<tr><td>28</td><td>6</td></tr>
<tr><td>30</td><td>8</td></tr>
<tr><td>32</td><td>10</td></tr>
<tr><td>34</td><td>12</td></tr>
<tr><td>36</td><td>16</td></tr>
<tr><td>48</td><td>48</td></tr>
</table>
The Engineer reserves the right to verify the Contractor’s strength tests. If the difference between the Engineer’s and the Contractor’s split sample strength test results is greater than 6200 kPa (900 psi) compressive strength or 620 kPa (90 psi) flexural strength, the Contractor’s test will be considered invalid, which will invalidate the strength-maturity relationship.</td></tr>
<tr><td>Section 9.</td><td>Delete the section.</td></tr>
</table>

Illinois Modified Test Procedure
Effective Date: February 1, 2014

Standard Practice
for
Use of Unbonded Caps in Determination of Compressive Strength of Hardened Concrete Cylinders

Reference ASTM C 1231/C 1231M-12

NOTE: This test method is to be used in conjunction with and according to Illinois Modified AASHTO T 22, "Compressive Strength of Cylindrical Concrete Specimens." According to Illinois Modified AASHTO T 22, the Contractor shall provide a copy of the ASTM test method to the Engineer if requested, which cannot be reproduced here due to copyright.

ASTM Section	***Illinois Modification***
5.3	Add as follows: The retainers shall be free of rust and other foreign material.

This Page Reserved

Illinois Modified Test Procedure
Effective Date: April 1, 2011

Standard Method
for
Bulk Specific Gravity and Density of Compacted Bituminous Mixtures Using Coated Samples

Reference ASTM D1188-07

ASTM Section	***Illinois Modification***
2.1	Replace the individual Standards as follows: Illinois Department of Transportation *Manual of Test Procedures for Materials (current edition)*

This Page Reserved

Illinois Modified Test Procedure
Effective Date: January 1, 2002
Revised: April 1, 2010

Standard Test Method
for
Determination of Density of Bituminous Concrete in Place by Nuclear Methods
Reference ASTM D 2950-91

ASTM Section	***Illinois Modification***
2.1	Replace the individual Standards as follows: Illinois Department of Transportation *Manual of Test Procedures for Materials* (current edition)
3.5	Replace with the following: The density results obtained by this test method are relative. If an approximation of core density results is required, a correlation factor will be developed to convert nuclear density to core density by obtaining nuclear density measurements and core densities at the same locations. The Department's "Standard Test Method for Correlating Nuclear Gauge Densities with Core Densities" shall be used to determine the appropriate correlation. It may be desirable to check this factor at intervals during the course of the paving project. A new correlation factor shall be determined when there is a change in the job mix (outside the allowable adjustments); a change in the source of materials or in the materials from the same source; a significant change in the underlying material; a change from one gauge to another; or a reason to believe the factor is in error.
3.6 New Section	All projects containing 2750 metric tons (3000 tons) or more of a given mixture will require a correlation factor be determined and applied for measurement and acceptance of density testing.

Illinois Modified Test Procedure
Effective Date: January 1, 2002
Revised: April 1, 2010

Standard Test Method
for
Determination of Density of Bituminous Concrete in Place by Nuclear Methods
Reference ASTM D 2950-91

ASTM Section	***Illinois Modification***

3.7
New
Section
	<u>Definitions:</u>
	
	Density Test Location: The random station location used for density testing.
	
	Density Reading: A single, one minute nuclear density reading.
	
	Individual Test Result: An individual test result is the average of three to five nuclear density readings obtained at each random density test location. One to three "individual test results" will be required per "density test location" depending on the following conditions:
	• If two confined edges are present, one "individual test" result representing all five density readings across the mat shall be reported. (Confined edge density readings are included in the average.)
	• If one confined and one unconfined edge is present, two "individual test results" shall be reported for each density test location.
	  ○ One "individual test result" representing the average of four density readings across the mat, including the one confined edge and excluding the unconfined edge density readings.
	  ○ One "individual test result" representing the average of three density readings on the unconfined edge.
	• If two unconfined edges are present, three "individual test" results shall be reported for each density test location.
	  ○ One "individual test result" representing the average of three density readings across the mat, excluding the unconfined edge density readings.
	  ○ One "individual test result" representing the average of three density readings on the unconfined edge.
	  ○ One "individual test result" representing the average of three density readings on the opposite unconfined edge.
	
	Daily Average Density Value: The "daily average density" is the average of the "density readings" of a given offset for the given days production.
	
	Density Test Site: Correlation term use to describe each physical location the nuclear density gauge is placed where a density value is determined.
	
	Density Value: Correlation term used to describe the density determined at a given density test site from the average of two or potentially three readings.

3.8 New Section	When the "Hot Mix Asphalt (HMA) Individual Density Site Modified QC/QA" special provision **is** included, "daily average density values" shall also be determined.

Illinois Modified Test Procedure
Effective Date: January 1, 2002
Revised: April 1, 2010

Standard Test Method
for
Determination of Density of Bituminous Concrete in Place by Nuclear Methods
Reference ASTM D 2950-91

ASTM Section	***Illinois Modification***
4.2.1	Add the following: The user should recognize that density readings obtained on the surface of thin layers of bituminous concrete may be erroneous if the density of the underlying material differs significantly from that of the surface course.
4.2.2	Add the following: Accuracy of the nuclear test modes (Backscatter vs. Direct Transmission) is not equal and is affected by the surface texture and thickness of the mixture under test. The nuclear test mode to be used and the number of tests required to determine a satisfactory factor are dependent on the conditions stated above.
4.5	Replace with the following: If samples of the measured material are to be taken for purposes of correlation with other test methods, the procedures described in the Department's "Standard Test Method for Correlating Nuclear Gauge Densities with Core Densities" shall be used.
5.5 New Section	*Readout Instrument,* such as scaler or direct readout meter.
7.1	Add the following: Dated inspection reports shall be kept and be made available to the Engineer upon request.
8.2.1	Replace with the following: The reference standard count shall be taken a minimum of 10 m (30 ft.) from another gauge and a minimum of 5 m (15 ft.) away from any other masses or other items which may affect the reference count rate. In addition, the reference count shall be taken on material 1510 kg/m^3 (100 lbs./ft.^{3}) or greater.
8.2.2	Revise the first sentence as follows: Turn on the apparatus prior to standardization and allow it to stabilize, a minimum of 20 minutes.
8.2.3	Replace with the following: All reference standard counts shall consist of a 4-minute count.
8.2.4	Replace with the following: The density reference standard count shall be within 1 percent of the average of the last four daily reference standard counts.

Illinois Modified Test Procedure
Effective Date: January 1, 2002
Revised: April 1, 2010

Standard Test Method
for
Determination of Density of Bituminous Concrete in Place by Nuclear Methods
Reference ASTM D 2950-91

ASTM Section	***Illinois Modification***
8.2.5 New Section	If four reference standard counts have not been established, then the reference standard count shall be within 2 percent of the standard count shown in the count ratio book.
8.2.6 New Section	If the reference standard count fails the established limits, the count may be repeated. If the second count fails also, the gauge shall not be used. The gauge shall be adjusted or repaired as recommended by the manufacturer.
8.2.7 New Section	Record all daily reference standard counts in a permanent-type book for a gauge historical record. This also applies to direct readout gauges.
8.3	Delete the first sentence.
9.1	Revise as follows: In order to provide more stable and consistent results: (1) turn on the instrument prior to use to allow it to stabilize, a minimum of 20 minutes; and (2) leave the power on during the day's testing.
9.3	Replace with the following: Select a test location, using the Department's "Determination of Random Density Test Site Locations". Each random density test site location shall consist of five equally spaced nuclear density offsets across the mat. These density offsets shall be positioned to provide a diagonal configuration across the mat. The outer density offsets shall be located at a distance equal to the lift thickness or a minimum of 2 in. (50 mm), from the edge of the mat, whichever is greater. • If the edge is unconfined, an “individual test result” shall represent the average of three “density readings” spaced 10 feet apart longitudinally along the unconfined edge. • If the edge is confined, the density reading will be averaged with the remaining offset “density readings” to provide an “individual test result” representing everything except unconfined edges.

Illinois Modified Test Procedure
Effective Date: January 1, 2002
Revised: April 1, 2010

Standard Test Method
for
Determination of Density of Bituminous Concrete in Place by Nuclear Methods
Reference ASTM D 2950-91

ASTM Section	***Illinois Modification***
9.4	Replace with the following: Maximum contact between the base of the instrument and the surface of the material under test is critical. Since the measured value of density by backscatter is affected by the surface texture of the material immediately under the gauge, a smoothly rolled surface should be tested for best results. A filler of limestone fines or similar material, leveled with the guide/scraper plate, shall be used to fill open surface pores of the rolled surface.
9.5	Replace with the following: For the Direct Transmission Method use the guide/scraper plate and drive the steel rod to a depth of at least 50mm (2 in.) deeper than the desired measurement depth.
9.6	Add the following: All other radioactive sources shall be kept at least 10 m (30 ft.) from the gauge so the readings will not be affected.
9.7	Delete.
9.8	Delete.
10.1	Delete.
10.1.1	Delete.
10.2	Delete.
11.1.1	Replace with the following: Gauge number,
11.1.2	Revise as follows: Date of calibration data,
11.1.5	Revise as follows: Density test site description as follows: (1) project identification number, (2) location, including station and reference to centerline, (3) mixture type(s), including mix design number and surface texture, e.g., open, smooth, roller-tracked, etc., and (4) number and type of rollers
11.1.6	Replace with the following: Layer (bottom lift = .1, second lift = .2, etc.) and thickness of layer,

Illinois Modified Test Procedure
Effective Date: January 1, 2002
Revised: April 1, 2010

Standard Test Method
for
Determination of Density of Bituminous Concrete in Place by Nuclear Methods
Reference ASTM D 2950-91

ASTM Section	***Illinois Modification***
A1.7.1	Replace with the following: The calibration check shall provide proof of five-block calibration. Calibration standards shall consist of magnesium, magnesium/aluminum, limestone, granite, and aluminum. All calibration standards should be traceable to the U.S. Bureau of Standards. Proof shall consist of documented and dated calibration counts accompanied by copies of an invoice from the calibrating facility.
A1.7.1 NOTE A1	Delete.

Illinois Modified Test Procedure
Effective Date: February 1, 2014

Standard Method of Test
for
Using Significant Digits in Test Data to Determine Conformance with Specifications

Reference ASTM E 29-13

Note: Several test procedures reference ASTM E 29 for rounding of test results. Results for Illinois Department of Transportation tests shall follow the "round up from five" rule, i.e.:

When the digit beyond the last place to be retained (or reported) is equal to or greater than 5, increase by 1 the digit in the last place retained.

The following modification to ASTM shall apply:

ASTM Section	***Illinois Modification***
6.4.2	Revise as follows: When the digit next beyond the last place to be retained (or reported) is equal to or greater than 5, increase by 1 the digit in the last place retained.
6.4.3	Delete.
6.4.4	Delete.

This Page Reserved

Illinois Modified Test Procedure
Effective Date: March 1, 2013

Standard Method of Test
For
Compressive Strength of Cylindrical Concrete Specimens

Reference AASHTO T 22-10 (2011)

AASHTO Section	***Illinois Modification***
2.1	Revise as follows: AASHTO R 39 (Illinois Modified) AASHTO T 23 (Illinois Modified) AASHTO T 231 (Illinois Modified) To maintain brevity in the text, the following will apply: **Example:** AASHTO T 23 (Illinois Modified) will be designated as "T 23."
2.2	Add as follows: ASTM E 29 (Illinois Modified) Standard Practice for Using Significant Digits in Test Data to Determine Conformance with Specifications To maintain brevity in the text, the following will apply: **Example:** ASTM E 29 (Illinois Modified) will be designated as "ASTM E 29."
4.4	Replace as follows: For QC/QA projects, refer to the Level I PCC Technician duties in the "Qualifications and Duties of Concrete Quality Control Personnel" document for training requirements.
5.1	Add as follows: The testing machine shall not be mounted on rollers.
5.1.1.1	Revise as follows: Replace "13 months" with "12 months."
6.2	Add to the end of the second sentence as follows: (Note: ASTM C 1231 is approved for use and the Contractor shall provide a current copy to the Engineer if requested.)
8.4 New Section	All rounding shall be according to ASTM E 29.

This Page Reserved

Illinois Modified Test Procedure
Effective Date: February 1, 2014

Standard Method of Test
For
Making and Curing Concrete Test Specimens in the Field

Reference AASHTO T 23-13

AASHTO Section	***Illinois Modification***
2.1	Revise as follows: AASHTO M 201 (Illinois Modified) AASHTO M 205 (Illinois Modified) AASHTO R 39 (Illinois Modified) AASHTO T 119 (Illinois Modified) AASHTO T 121 (Illinois Modified) AASHTO R 60 (Illinois Modified) AASHTO T 152 (Illinois Modified) AASHTO T 196 (Illinois Modified) AASHTO T 231 (Illinois Modified) To maintain brevity in the text, the following will apply: **Example:** AASHTO T 119 (Illinois Modified) will be designated as "T 119."
2.2	Add as follows: ASTM C1064/C1064M (Illinois Modified) To maintain brevity in the text, the following will apply: **Example:** ASTM C 1064/C 1064M (Illinois Modified) will be designated as "ASTM C 1064."
4.3, 4.3.1, 4.3.2, 4.3.3, and 4.3.4	Replace as follows: Strength specimens shall be field cured with the construction item as follows: *Cast-in-Place Concrete* • Whenever the Contractor desires to open the pavement or shoulder to traffic prior to 14 days from time of concrete placement. • Whenever pavement patching or bridge deck patching is performed. • Whenever a sequential deck pour is involved, and the Contractor wants to pour the next portion of deck based on a previous deck pour strength of 650 psi (4,500 kPa) flexural or 3500 psi (24,000 kPa) compressive.

Standard Method of Test
For
Making and Curing Concrete Test Specimens in the Field
(continued)
Reference AASHTO T 23-13

AASHTO Section	***Illinois Modification***
4.3, 4.3.1, 4.3.2, 4.3.3, and 4.3.4 continued	• As directed by the Engineer. The need to field cure strength specimens with the construction item is appropriate when the concrete curing temperature experienced in the field will be significantly different from the concrete curing temperature experienced in the laboratory. This will most often occur for concrete work done in the spring and fall. In this situation, it is not unusual for field air temperatures to be low, but not low enough to require cold weather concrete protection. As an example, a cement only concrete mix that is cured in the field at 13 °C (55 °F) will have significantly lower strengths at 3, 7, and 14 days than concrete cured in the laboratory at 23 ± 2 °C (73 ± 3 °F). However, by 28 days, the concrete cured in the field should have comparable strength to the concrete cured in the laboratory. Therefore, it is important for the Engineer to consider daily high and low temperatures, concrete temperature of the delivered concrete, insulation benefit obtained from the forms and curing method, and the heat of hydration generated from the size of the pour. These factors will determine if field curing of strength specimens is warranted It should be noted that strength specimens cured in the field shall be in the same manner as the pavement or structure, which may include such thing as insulation if used *Precast Concrete* • For precast concrete products, this shall be according to Article 1020.13 (Notes for Index Table of Curing and Protection of Concrete Construction) of the Standard Specifications for Road and Bridge Construction. *Precast Prestressed Concrete* • For precast prestressed concrete products, this shall be according to Section 1.2.4 “Quality Control Testing Requirements” of the Manual for Fabrication of Precast Prestressed Concrete Products.
5.1	Replace the first sentence as follows: Beam molds shall be made of steel or plastic, and cylinder molds shall be made of plastic. However, for precast products and precast prestressed products, metal cylinder molds may be used.

Standard Method of Test
For
Making and Curing Concrete Test Specimens in the Field
(continued)
Reference AASHTO T 23-13

AASHTO Section	***Illinois Modification***
5.3	Revise as follows: Delete the fourth and fifth sentences, and add after the third sentence: Beam molds with an interior radius at the bottom or top of the mold are unacceptable.
5.4	Revise as follows: The tamping rod shall be at least 584 mm (23 in.) in length for the 150 mm (6 in.) diameter cylinder or 150 mm (6 in.) wide beam and shall be 10 mm (3/8 in.) in diameter and at least 350 mm (14 in.) in length for the 100 mm (4 in.) diameter cylinder.
5.11	Revise as follows: The temperature measuring devices shall conform to the applicable requirements of ASTM C 1064.
6.2	Replace as follows: *Flexural Strength Specimens*—Flexural strength specimens shall be rectangular beams of concrete cast and hardened with long axes horizontal. The beam cross section shall be 152 by 152 mm (6 by 6 in.), and shall have a maximum tolerance of ±6 mm (±1/4 in.) in either direction. The beam length shall overhang a minimum of 23 mm (1 in.) at each end of the testing machine's span length. If two breaks are desired with one beam, the beam length shall be a minimum 756 mm (29-3/4 in.) and the machine's span length shall be a maximum of 406 mm (16 in.).
8.3	Revise as follows: Determine and record the temperature in accordance with ASTM C 1064.
10.1.2	Add as follows: A plastic cover with an absorbent pad saturated with water, is an acceptable method to cover beam molds. The plastic cover and absorbent pad shall be the preferred method to cover beam molds. A plastic cylinder lid shall be the preferred method to cover cylinder molds.
10.2, 10.2.1, and 10.2.2	Replace as follows: *Field Curing*—Store test specimens as near to the point of deposit of the concrete represented as possible. However, some instances may require a distinct and separate location. Therefore, carefully select the field location since the test specimens will generate minimal heat from hydration. The test specimens shall have the same curing method and shall be in the same field environment as the construction item. If form work is removed, remove test specimens from their molds. At the time of testing, guard against the drying of the test specimen if appropriate.

This Page Reserved

Illinois Modified Test Procedure
Effective Date: June 1, 2012
Revised Date: February 1, 2014

Standard Method of Test
for
Mechanical Analysis of Extracted Aggregate

Reference AASHTO T 30-10

AASHTO Section	***Illinois Modification***
2.1	Replace AASHTO Standard T 164 with the following: • Illinois Modified AASHTO T 164 Replace AASHTO Standard T 255 with the following: • Illinois Test Procedure 255
6.1.1	Replace with the following: The sample shall be dried until further drying at 110 ± 5 °C (230 ± 9 °F) does not alter the mass more than 0.5 gram in 1 hour; results are then recorded to the nearest 0.1 gram.

This Page Reserved

Illinois Modified Test Procedure
Effective Date: February 1, 2014

Standard Method of Test
for
Moisture - Density Relations of Soils Using a 2.5-kg (5.5-lb) Rammer and a 305-mm (12-in.) Drop

Reference AASHTO T 99-10

AASHTO Section	***Illinois Modification***
2.1	Revise as follows: Illinois Test Procedure 19 replaces T 19M/T 19 AASHTO T 224 (Illinois Modified) AASHTO T 265 (Illinois Modified) To maintain brevity in the text, the following will apply: **Example:** AASHTO T 224 (Illinois Modified) will be designated as "T 224". All references to "AASHTO T 19M/T 19" or "T 19" shall be understood to refer to Illinois Test Procedure 19.
2.2	Revise as follows: ASTM E 29 (Illinois Modified) Standard Practice for Using Significant Digits In Test Data to Determine Conformance with Specifications To maintain brevity in the text, the following will apply: **Example:** ASTM E 29 (Illinois Modified) will be designated as "ASTM E 29."
5., 7., 9., 11., and 12	Add as follows: All rounding shall be according to ASTM E 29.

This Page Reserved

Standard Method of Test
for
Slump of Hydraulic Cement Concrete

Reference AASHTO T 119M/T 119-13

AASHTO Section	***Illinois Modification***
2.1	Revise as follows: AASHTO T 23 (Illinois Modified) AASHTO T 121 (Illinois Modified) AASHTO R 60 (Illinois Modified) AASHTO T 152 (Illinois Modified) AASHTO T 196 (Illinois Modified) To maintain brevity in the text, the following will apply: Example: AASHTO T 23 (Illinois Modified) will be designated as "T 23."
5.1	Revise the ninth sentence as follows: The mold shall be free from dents, deformations, and adhered mortar. Add eleventh sentence as follows: A funnel and a swing handle (attached to the base plate for measuring vertical distance) may be used. **Comment: Plastic molds are not permitted under any circumstances despite approval in ASTM C 143.**
5.1.2	Delete
5.1.2.1	Delete
5.1.2.2	Delete
7.1, 7.2, 7.3, and 7.4	Replace with the following: The following is the test method for determining the slump of concrete: 1. Dampen the funnel, the cone, the hand scoop or trowel, the tamping rod, and the floor or base plate. 2. Conduct the test on a flat, level, firm, non-absorbent surface which is free from vibration or other disturbances. 3. Hold the cone firmly in place by standing on the two foot pieces, or by closing the clamps on the base plate. Do not allow the cone to move during filling. 4. Immediately fill the cone in three layers, each approximately one-third the volume of the cone. The bottom layer shall fill the cone to approximately one-quarter its depth [67 mm (2 5/8 in.)], the middle layer to approximately one-half its depth [155 mm (6 1/8 in.)], and the top layer to just over the top of the cone. Each scoopful of concrete should be moved around the top edge of the cone (or funnel, if used) to provide even distribution of the concrete in the cone. If the funnel is used when placing the top layer, raise it slightly to prevent it from becoming wedged inside the cone.

Standard Method of Test
for
Slump of Hydraulic Cement Concrete
(continued)
Reference AASHTO T 119M/T 119-13

AASHTO Section	***Illinois Modification***
7.1, 7.2, 7.3, and 7.4 continued	5. If the funnel is used, remove it before rodding each layer. Rod each layer 25 times with the hemispherical end of the tamping rod. Distribute the rod strokes uniformly over the cross section of each layer. This will require the tamping rod at times, to be inclined slightly. Rod approximately half of the strokes near the perimeter, and then progress with vertical strokes spirally toward the center. 6. Rod the bottom layer throughout its depth and avoid forcibly striking the floor or base plate. To accomplish this, hold the tamping rod at the point which will allow the desirable tamping depth. 7. Rod the middle and top layers to just penetrate into the underlying layer. To accomplish this, hold the tamping rod at the point which will allow the desirable tamping depth. 8. When rodding the top layer, keep the level of concrete above the cone at all times. If the level of concrete drops below the top of the cone, stop rodding and add more concrete. The rodding count shall resume at the point of interruption. 9. Strike off the concrete level with the top of the cone using a screeding and rolling motion with the tamping rod. 10. Hold the cone, without movement, by applying a downward force to the handles. Step off the foot pieces, or unclamp the base plate clamps, and immediately raise the cone above the concrete. This shall be performed in a steady upward lift with no lateral movement or rotation. The cone shall be lifted within 3 to 7 seconds. Step 4 through 10 shall performed within 2 ½ minutes. 11. If a significant falling away or shearing off of concrete from one side occurs, do not measure the slump. Repeat the test on another portion of the sample. If the same result occurs, the concrete probably lacks the cohesiveness for the slump test to be applicable. 12. To measure the slump, invert the cone and place it on the floor or base plate near the slumped concrete. Place the tamping rod across the cone and immediately measure the distance between the bottom of the rod and the displaced original center of the top surface of the concrete. A base plate with a swing handle may also be used to measure the distance.

Illinois Modified Test Procedure
Effective Date: February 1, 2014

Standard Method of Test
For
Weight per Cubic Foot, Yield, and Air Content (Gravimetric) of Concrete

Reference AASHTO T 121M/T 121-12

AASHTO Section	***Illinois Modification***
2.1	Add as follows: AASHTO M 231 Weighing Devices Used in the Testing of Materials Revise as follows: Illinois Test Procedure 19 replaces T 19M/T 19 AASHTO T 23 (Illinois Modified) AASHTO T 119 (Illinois Modified) AASHTO R 60 (Illinois Modified) AASHTO T 152 (Illinois Modified) AASHTO T 196 (Illinois Modified) To maintain brevity in the text, the following will apply: **Example:** AASHTO T 23 (Illinois Modified) will be designated as "T 23." All references to "AASHTO T 19M/T 19" or "T 19" shall be understood to refer to Illinois Test Procedure 19.
2.2	Add as follows: ASTM E 29 (Illinois Modified) Standard Practice for Using Significant Digits in Test Data to Determine Conformance with Specifications To maintain brevity in the text, the following will apply: **Example:** ASTM E 29 (Illinois Modified) will be designated as "ASTM E 29."
2.3 New Section	Illinois Standard: Illinois Specification 101 Minimum Requirement for Electronic Balances.
4.1	Replace the first sentence with the following: The balance or scale shall conform to M 231 and Illinois Specification 101.
7.1	Add to the beginning of the paragraph as follows: Dampen the interior of the measure and place it on a flat, level, firm surface.
8.1	Add as follows: The test result shall be rounded to the nearest 1 kg/m^3 (0.1 lb/ft^3).
8.2	Add as follows: The test result shall be rounded to the nearest 0.01 m^3 (0.1 ft^3).
8.3	Add as follows: The test result shall be rounded to the nearest 0.01.
8.4	Add as follows: The test result shall be rounded to the nearest 1 kg/m^3 (1 lb/yd^3).
8.5	Add as follows: The test result shall be rounded to the nearest 0.1 percent.
8.6 New Section	All rounding shall be according to ASTM E 29.

This Page Reserved

Illinois Modified Test Procedure
Effective Date: February 1, 2014

Standard Method of Test
for
Moisture-Density Relations of Soil-Cement Mixtures

Reference AASHTO T 134-05 (2009)

AASHTO Section	***Illinois Modification***
2.1	Revise as follows: AASHTO M 92 (Illinois Modified) AASHTO M 231 (Illinois Modified) Illinois Test Procedure 19 replaces T19M/T 19 AASHTO T 224 (Illinois Modified) AASHTO T 265 (Illinois Modified) Remove as follows: AASHTO R 11 (replaced by Illinois Modified ASTM E 29) To maintain brevity in the text, the following will apply: **Example:** AASHTO T 224 (Illinois Modified) will be designated as "T 224." All references to "AASHTO T 19M/T 19" or "T 19" shall be understood to refer to Illinois Test Procedure 19.
2.2	Add as follows: ASTM E 29 (Illinois Modified) Standard Practice for Using Significant Digits in Test Data to Determine Conformance with Specifications To maintain brevity in the text, the following will apply: **Example:** ASTM E 29 (Illinois Modified) will be designated as "ASTM E 29."
8.1	Add as follows: All rounding shall be according to ASTM E 29.

This Page Reserved

This Page Reserved

AASHTO T 141 has been replaced by AASHTO R 60.

This Page Reserved

AASHTO T 141 has been replaced by AASHTO R 60.

Illinois Modified Test Procedure
Effective Date: February 1, 2014

Standard Method of Test
For
Air Content of Freshly Mixed Concrete by the Pressure Method

Reference AASHTO T 152-13

AASHTO Section	***Illinois Modification***
2.1	Revise as follows: AASHTO R 39 (Illinois Modified) AASHTO R 60 (Illinois Modified) AASHTO T 23 (Illinois Modified) AASHTO T 119 (Illinois Modified) AASHTO T 121 (Illinois Modified) AASHTO T 196 (Illinois Modified) Add as follows: AASHTO M 231 Weighing Devices Used in the Testing of Materials To maintain brevity in the text, the following will apply: **Example:** AASHTO T 23 (Illinois Modified) will be designated as "T 23."
2.2	Add as follows: ASTM E 29 (Illinois Modified) Standard Practice for Using Significant Digits in Test Data to Determine Conformance with Specification To maintain brevity in the text, the following will apply: **Example:** ASTM E 29 (Illinois Modified) will be designated as "ASTM E 29."
2.3 New Section	Illinois Standards: Illinois Specification 101 Minimum Requirement for Electronic Balances
6.1	Add as follows: The maximum calibration interval is 12 months for the Type A air meter, and 3 months for the Type B air meter.
7.1	Add as follows: The average correction factor test may be performed on separate samples of fine and coarse aggregate. Refer to Section 7.5 for more information.

Standard Method of Test
For
Air Content of Freshly Mixed Concrete by the Pressure Method
(continued)
Reference AASHTO T 152-13

AASHTO Section	***Illinois Modification***
7.5 New Section	Add as follows: *Alternate Aggregate Correction Factor Determination Using Department Type A Meter*: Prepare separate representative samples of fine and coarse aggregate, each in the amount which will be used in a volume of concrete exactly sufficient to fill the container, which for this purpose may be considered as having a capacity of 0.2 cubic foot. To do so, it is necessary to know or estimate the proportions of the materials which will be used in the work. If the size of samples used are later found to be in error to any important degree, the test should be repeated after the proportions have become definitely established. Fill the container about half full of water, pour the fine aggregate slowly into the container and stir vigorously by hand for five minutes so that the fine aggregate will be completely inundated with no entrapped air around or between the particles. It is very difficult to remove all of the entrapped air and much care should be taken in performing this operation or the test will show erroneous results. Finish filling the container with water. Wipe the contact surfaces clean and clamp the cover of the apparatus firmly to the container. Close the lower petcock and open the upper petcock and the funnel valve. Pour water through the funnel until it stands at a level slightly above the arrow mark on the graduated scale. Close the funnel valve and adjust the water level to the arrow mark on the graduated scale by means of the lower petcock. Close the upper petcock and apply pressure with the bicycle tire pump until the gage reads 103 kPa (15 psi). Read and record the subsidence of the water level. Release the pressure by opening the upper petcock. Release the water by opening the C-clamps. Repeat the test on other samples until it is apparent from the results obtained that all the air entrapped between the fine aggregate particles is being stirred out. Repeat the entire procedure with the coarse aggregate sample(s). The sum of the readings obtained for the two samples is the subsidence of the water level due to the air held within the aggregate particles, and is the correction to be applied in determining the air content of the concrete. The test can be made on the samples of fine and coarse aggregate combined, but more difficulty will be experienced in stirring out entrapped air.

Standard Method of Test
For
Air Content of Freshly Mixed Concrete by the Pressure Method
(continued)
Reference AASHTO T 152-13

AASHTO Section	***Illinois Modification***
9.2 9.2.1, 9.2.2, 9.2.3, 9.2.4, and 9.2.5	Replace as follows: *Procedure—Department Type A Meter*: 1. Thoroughly clean the flange or rim of the bowl and moisten the cover assembly. This will ensure that when the cover is clamped, a pressure-tight seal will be obtained. 2. Close the lower petcock. Open the upper petcock and the funnel valve. Add water through the funnel until the level is slightly above the index mark, or until water flows from the upper petcock. 3. Close the funnel valve. Using the lower petcock, adjust the bottom of the meniscus (water level) to be level with the index mark. The index mark is to account for the expansion of the air meter, and is above the zero mark. The expansion is primarily a result of the C-clamps elongating. Always read the water level at the bottom of the meniscus. Close the lower petcock. 4. Close the upper petcock. 5. Using the hand pump, apply 103 kPa (15 psi) pressure. 6. Read the water level and record the **apparent air content** to the nearest tenth of a percent. If the water level cannot be read at 103 kPa (15 psi), reduce the air pressure to 69 kPa (10 psi) and multiply the reading by 1.25. If the water level cannot be read at 69 kPa (10 psi), reduce the air pressure to 34 kPa (5 psi) and multiply the reading by 2.00. 7. Release the air pressure by slowly opening both petcocks before unclamping and removing the cover. If the water glass needs cleaning, remove the valve from the funnel valve assembly. Clean the inside of the glass with a strip of cloth and one of the wire guards of the water glass.

Standard Method of Test
For
Air Content of Freshly Mixed Concrete by the Pressure Method
(continued)
Reference AASHTO T 152-13

AASHTO Section	***Illinois Modification***
10.3	Revise table as follows: Absolute Volume, ft^3 (m^3) Cement _____ Water _____ V_m V_c Fine Aggregate _____ Coarse Aggregate No. 4 (4.75 mm) to 1-1/2 in. (37.5 mm) _____ Coarse Aggregate >1-1/2 in. (37.5 mm) _____ V_a Total _____ V_t
11.1.1	Replace as follows: All rounding shall be according to ASTM E 29. The test result shall be rounded to the nearest 0.1 after subtracting the aggregate correction factor.
Annex A1	Delete the Section and replace as follows: The air meter shall be calibrated according to the instructions provided in the Portland Cement Concrete Level I Technician Course Manual. The balance or scale shall conform to M 231 and Illinois Specification 101.

Illinois Modified Test Procedure
Effective Date: June 1, 2012
Revised Date: February 1, 2014

Standard Method of Test
for
Quantitative Extraction of Asphalt Binder from Hot Mix Asphalt (HMA)

Reference AASHTO T 164-11 (ASTM D 2172-05)

AASHTO Section	***Illinois Modification***
2.1	Replace AASHTO Standard T 84 with the following: • Illinois Test Procedure 84
4.1	Replace with the following: The HMA mixture is extracted with trichloroethylene; *normal*-propyl bromide; or methylene chloride, using the extraction equipment applicable to Test Method A or B. The asphalt binder content is calculated by differences from the mass of the extracted aggregate and moisture content, and mineral matter (when using centrifuge extraction from Test Method A) in the extract. The asphalt binder content is expressed as a mass percent of moisture-free mixtures.
5.2 New Section	Method B shall be used for the quantitative testing of HMA mixtures for asphalt content and aggregate gradation. Method A or E shall be used to recover the asphalt binder from a mixture for qualitative analysis.
9.2.1	Replace with the following: If the mixture is not sufficiently soft to separate with a spatula or trowel, place it in a large, flat pan and heat to a temperature just warm enough so that splitting can be performed. Illinois requires the material to be split to the sample size by use of the splitter specified in AASHTO T 248 (Illinois Modified).
10.1	Replace with the following: When required, calculate the moisture content of the mixture. Moisture content in the sample is defined as follows: $\frac{\text{Original Mass} - \text{Oven Dry Mass}}{\text{Original Mass}}$
12.6	Replace with the following: When centrifuge extraction from Test Method A is used, the amount of mineral matter in the extract shall be determined. Any of the test procedures specified in Annex A1 may be used to determine the amount of mineral matter.

Illinois Modified Test Procedure
Effective Date: June 1, 2012
Revised Date: February 1, 2014

Standard Method of Test
for
Quantitative Extraction of Asphalt Binder from Hot Mix Asphalt (HMA)

Reference AASHTO T 164-11 (ASTM D 2172-05)

AASHTO Section	***Illinois Modification***
13.	Replace with the following: If centrifuge extraction from Test Method A is used, or when any other method of extraction is used and the amount of mineral matter in the extract is determined, then the percent bitumen in the test portion shall be calculated as follows: Bitumen Content, % = $\frac{(W_1 - W_2) - (W_3 + W_4)}{W_1 - W_2} x100$ Where: W_1 = mass of test portion, W_2 = mass of water in test portion, W_3 = mass of extracted mineral aggregate, and W_4 = mass of mineral matter in the extract. When any other method of extraction is used and the amount of mineral matter in the extract is not determined, then the percent bitumen in the test portion shall be calculated as follows: Bitumen Content, % = $\frac{\text{Sample Mass, Dry} - \text{Aggregate Mass, Dry}}{\text{Sample Mass, Dry}}$
14.1.1.2	Revise the first sentence as follows: *Cylindrical Metal Frames*, two.
16.2.1	Replace with the following: Dry two sheets of filter paper for each metal frame to a constant mass in an oven at 110 ± 5 °C (230 ± 9 °F). Fold each filter paper into quarters. Place the first filter paper into the metal frame in the shape of a cone with three layers on one side and one layer of filter paper on the other side. Place the second filter paper in the cone in the opposite direction, creating four layers of filter paper around the basket.
16.2.2	Replace with the following: Determine the mass of each sample, weighing the pan, sample, and filter paper to the nearest 0.1 gram.

Illinois Modified Test Procedure
Effective Date: June 1, 2012
Revised Date: February 1, 2014

Standard Method of Test
for
Quantitative Extraction of Asphalt Binder from Hot Mix Asphalt (HMA)

Reference AASHTO T 164-11 (ASTM D 2172-05)

AASHTO Section	***Illinois Modification***
16.2.3	Revise the fourth sentence as follows: Determine the mass of each loaded frame separately to the nearest 0.1 gram using a tared pan.
16.2.3	Delete the last sentence.
16.2.6	Replace the second sentence as follows: Dry the frames in the vented hood; transfer the sample and filters into the original tared pan; and place the pan, sample, and filters in a vented oven at 110 ± 5 °C (230 ± 9 °F) for 3 hours before determining the constant mass.

This Page Reserved

Illinois Modified Test Procedure
Effective Date: January 1, 2002
Revised: April 1, 2011

Standard Method of Test
for
Bulk Specific Gravity of Compacted Bituminous Mixtures Using Saturated Surface-Dry Specimens

Reference AASHTO T 166-10, Methods A and C

AASHTO Section	***Illinois Modification***
2.1	Replace with the following: *Referenced Illinois modified AASHTO Standards:* ■ M231, Weighing Devices Used in the Testing of Materials
2.2 New Section	*Referenced Illinois modified ASTM Standards:* ■ D1188, Bulk Specific Gravity and Density of Compacted Bituminous Mixtures Using Coated Samples
3.1.2	Replace with the following: Constant mass shall be defined as the mass at which further drying at 52 ± 3 °C (125 ± 5 °F) for 2 hours, or at 110 ± 3 °C (230 ± 5 °F) for 1 hour, does not alter the mass more than 0.5 gram. Samples being saved for Quality Assurance testing shall not be dried at 110 ± 3 °C (230 ± 5 °F).
4.2	Revise as follows: *Size of Specimens*—It is (1) required that the minimum diameter of the gyratory compacted specimens be 150 mm (5.91 inches), (2) required that the minimum diameter of the cored specimens be 92.1 mm (3 5/8 inches), and (3) recommended that the thickness of specimens be at least one and one half times the maximum size of the aggregate.
5.3	Add as the last sentence: The water bath shall meet the requirements listed in the Illinois Department of Transportation document, "Bituminous Concrete QC/QA Laboratory Equipment".
6.2	Replace the first sentence with the following: Cool the specimen to room temperature at 25 ± 5 °C (77 ± 9 °F) and brush it to remove any loose particles. Weigh the specimen and record the result as the original dry mass, "A". Measure the thickness of the specimen in three places to the nearest 1.0 mm (1/16 inch) to obtain an average.
8.2	Revise as follows: Water Bath. Thermostatically controlled, capable of maintaining the bath at 25 ± 1 °C (77 ± 1.8 °F).

Illinois Modified Test Procedure
Effective Date: January 1, 2002
Revised: April 1, 2011

Standard Method of Test
for
Bulk Specific Gravity of Compacted Bituminous Mixtures Using Saturated Surface-Dry Specimens

Reference AASHTO T 166-10, Methods A and C

AASHTO Section	***Illinois Modification***
9.2	Replace the first sentence with the following: Cool the specimen to room temperature at 25 ± 5 °C (77 ± 9 °F) and brush it to remove any loose particles. Weigh the specimen and record the result as the original dry mass, "A". Measure the thickness of the specimen in three places to the nearest 1.0 mm (1/16 inch) to obtain an average.
11.1	Add the following: Method C (Rapid Test) shall not be used if cores are being saved for Quality Assurance testing.

Illinois Modified Test Procedure
Effective Date: June 1, 2012

Standard Method of Test
for
Flexural Strength of Concrete
(Using Simple Beam with Center-Point Loading)

Reference AASHTO T 177-10

AASHTO Section	***Illinois Modification***
2.1	Revise as follows: AASHTO T 23 (Illinois Modified) To maintain brevity in the text, the following will apply: **Example:** AASHTO T 23 (Illinois Modified) will be designated as "T 23."
2.2	Add as follows: ASTM E 29 (Illinois Modified) Standard Practice for Using Significant Digits in Test Data to Determine Conformance with Specifications To maintain brevity in the text, the following will apply: **Example:** ASTM E 29 (Illinois Modified) will be designated as "ASTM E 29."
4.1	Revise as follows: Replace the second sentence with: "Hand-operated testing machines having pumps that do not provide a continuous loading to failure in one stroke are permitted, and the machine's span length shall be between 400 mm (15 3/4 in.) and 464 mm (18 1/4 in.). When calibrating hand-operated testing machines according to T 67, the accuracy requirement is ± 3 %."
5.2	Delete.

Standard Method of Test
for
Flexural Strength of Concrete
(Using Simple Beam with Center-Point Loading)
(continued)
Reference AASHTO T 177-10

AASHTO Section	***Illinois Modification***
6.4 New Section	The Department test procedure for a hand pump beam breaker is as follows: Fins that may have formed in finishing the beam shall be removed. The beam shall be placed in the machine, with the formed sides in contact with the loading crosshead and reaction rollers (i.e. finished side vertical). The beam shall be inserted to engage properly the bottom rollers, and shall have a minimum of 25 mm (1 in.) overhang. The beam shall be properly centered on the bottom rollers. The hand wheel is then rotated to bring the loading crosshead firmly into contact with the beam. The release valve is then closed finger tight by turning it clockwise, and the gauge check valve is placed in the "ON" position. The pump is then operated continuously and without shock. The load shall be applied rapidly until approximately 50 percent of the estimated breaking load is obtained. Thereafter, the load rate shall be 1,035 ± 175 kPa/min. (150 ± 25 psi/min.) until rupture occurs. The reading of the hydraulic gauge is then recorded, the gauge check valve brought to the "OFF" position, the release valve opened by turning it counterclockwise, and the hand wheel rotated to raise the loading crosshead. When using the 762 mm (30 in.) long beam, the remaining length is inserted for the second break. The same test procedure is used. **Note for Department Made Beam Breaker:** If during the test a value of 6,900 kPa (1,000 psi) flexural strength is obtained, and the beam has not ruptured, testing may be discontinued to avoid damage to the hand pump beam breaker. The value shall be recorded as 6,900+ kPa (1,000+ psi). For a minimum design flexural strength that is greater than 5,500 kPa (800 psi), the Department made beam breaker should not be used.
7., 8. and 9.	Add as follows: All rounding shall be according to ASTM E 29.

Illinois Modified Test Procedure
Effective Date: February 1, 2014

Standard Method of Test
for
Moisture - Density Relations of Soils Using a 4.54-kg (10-lb) Rammer and a 457-mm (18-in.) Drop

Reference AASHTO T 180-10

AASHTO Section	***Illinois Modification***
2.1	Revise as follows: Illinois Test Procedure 19 replaces T19M/T 19 AASHTO T 224 (Illinois Modified) AASHTO T 265 (Illinois Modified) To maintain brevity in the text, the following will apply: **Example:** AASHTO T 224 (Illinois Modified) will be designated as "T 224." All references to "AASHTO T 19M/T 19" or "T 19" shall be understood to refer to Illinois Test Procedure 19.
2.2	Add as follows: ASTM E 29 (Illinois Modified) Standard Practice for Using Significant Digits In Test Data to Determine Conformance with Specifications To maintain brevity in the text, the following will apply: **Example:** ASTM E 29 (Illinois Modified) will be designated as "ASTM E 29."
5., 7., 9., 11., and 12.	Add as follows: All rounding shall be according to ASTM E 29.

This Page Reserved

Illinois Modified Test Procedure
Effective Date: February 1, 2014

Standard Method of Test
for
Density of Soil In-Place by the Sand-Cone Method

Reference AASHTO T 191-13

AASHTO Section	***Illinois Modification***
2.1	Revise as follows: Illinois Test Procedure 19 replaces T 19M/T19 AASHTO T 99 (Illinois Modified) AASHTO T 217 (Illinois Modified) AASHTO T 265 (Illinois Modified) To maintain brevity in the text, the following will apply: **Example:** AASHTO T 99 (Illinois Modified) will be designated as "T 99". All references to "AASHTO T 19M/T 19" or "T 19" shall be understood to refer to Illinois Test Procedure 19.
2.2	Revise as follows: ASTM E 29 (Illinois Modified) Standard Practice for Using Significant Digits In Test Data to Determine Conformance with Specifications To maintain brevity in the text, the following will apply: **Example:** ASTM E 29 (Illinois Modified) will be designated as "ASTM E 29."
4.1.1 and 4.3.3	Add Note 5 as follows: Note 5—Vibration of the sand during any mass-volume determination may increase the bulk density of the sand and decrease the accuracy of the determination. Appreciable time intervals between the bulk density determination of the sand and its use in the field may result in change in the bulk density caused by a change the moisture content or effective gradation.
4.2.4	Revise (Step 4.1.3) to (Step 4.1.2).
5. and 6.	Add as follows: All rounding shall be according to ASTM E 29.

This Page Reserved

Illinois Modified Test Procedure
Effective Date: February 1, 2014

Standard Method of Test
for
Air Content of Freshly Mixed Concrete by the Volumetric Method

Reference AASHTO T 196M/T 196-11

AASHTO Section	***Illinois Modification***
2.1	Revise as follows: Illinois Test Procedure 19 replaces T 19M/T 19 AASHTO T 23 (Illinois Modified) AASHTO T 119 (Illinois Modified) AASHTO T 121 (Illinois Modified) AASHTO T 141 (Illinois Modified) Note: AASHTO T 141 is now AASHTO R 60. AASHTO T 152 (Illinois Modified) To maintain brevity in the text, the following will apply: **Example:** AASHTO T 23 (Illinois Modified) will be designated as "T 23." All references to "AASHTO T 19M/T 19" or "T 19" shall be understood to refer to Illinois Test Procedure 19.
2.2	Add as follows: ASTM E 29 (Illinois Modified) Standard Practice for Using Significant Digits in Test Data to Determine Conformance with Specifications To maintain brevity in the text, the following will apply: **Example:** ASTM E 29 (Illinois Modified) will be designated as "ASTM E 29."
5.1	Revise as follows: Replace "three-year intervals" with "1-year intervals."
8.3 New Section	All rounding shall be according to ASTM E 29. The test result shall be rounded to the nearest 0.1 percent.

This Page Reserved

Illinois Modified Test Procedure
Effective Date: February 5, 2008
Revised Date: February 1, 2014

Standard Method of Test
for
Maximum Specific Gravity of Bituminous Paving Mixtures

Reference AASHTO T 209-05

AASHTO ***Section***	***Illinois Modification***
4.1	Replace the second and third sentences with the following: Sufficient water at a temperature of 25 ± 1°C (77 ± 1.8°F) is added to completely submerge the sample. Vacuum is applied for 15 ± 2 min. to gradually reduce the residual pressure in the vacuum vessel to 4.0 ± 0.3 kPa (30 ± 2.5 mm Hg), or less. Delete the last sentence.
6.1.2	Replace the first sentence with the following: The vacuum container size should be at least 1200 mL and depends on the minimum sample size requirements given in Section 7.2.
6.3.1	Replace with the following: When a vacuum pump is used, a suitable trap of one or more 1000-ml filter flasks, or equivalent, may be installed between the vacuum vessel and vacuum source to reduce the amount of water vapor entering the vacuum pump.
6.7.1	Replace with the following: The water bath shall be maintained at a constant temperature of 25 ± 1°C (77 ± 1.8°F) during testing.
Figure 1	Change the capacity of the Filter Flask Vacuum Vessel from 2000cc to a minimum of 1200mL.
8.1	Replace with the following: For the weighing-in-water method (Section 9.5.1), calibrate the volumetric flasks or pycnometers by determining the mass of the container when submerged in water at 25 ± 1°C (77 ± 1.8°F). Complete the process three times and average the results for the proper calibration. Designate this mass as *C*.
Figure 2	Delete
8.2	Replace with the following: For the weighing-in-air method (Section 9.5.2), calibrate the volumetric flasks or pycnometers by determining the mass of the container when filled with water at 25 ± 1°C (77 ± 1.8°F). Complete the process three times and average the results for the proper calibration. Designate this mass as *D*. Accurate filling may be ensured by the use of a glass cover plate.

Illinois Modified Test Procedure
Effective Date: February 5, 2008
Revised Date: February 1, 2014

Standard Method of Test
for
Maximum Specific Gravity of Bituminous Paving Mixtures

Reference AASHTO T 209-05

AASHTO ***Section***	***Illinois Modification***
Figure 3	Delete
8.3	Delete
8.3.1	Delete
8.3.2	Delete
8.3.3	Delete
Note 6	Delete
Figure 4	Delete (with definitions and explanations)
9.2	Replace the first two sentences with the following: Samples prepared in a laboratory shall be cured and dried in an oven according to IL-mod AASHTO R30. Longer drying time may be necessary for a sample to achieve constant mass. Constant mass shall be defined as the mass at which further drying does not alter the mass more than 0.5 gram in 1 hour.
Note 7	Replace the first sentence with the following: The minimum time in the oven is specified as cure time for laboratory-prepared specimens.
9.4	Replace with the following: Remove air trapped in the sample by applying gradually increased vacuum until the residual pressure manometer reads 4.0 ± 0.3 kPa (30.0 ± 2.5 mm Hg), or less. Maintain this residual pressure for 15 ± 2 minutes. Agitate the container and contents during the vacuum period either continuously by a mechanical device, or manually by vigorously shaking at intervals of about two minutes.
9.5.1	Replace with the following: *Weighing in Water* - Suspend the container and contents in the 25 ± 1 °C (77 ± 1.8 °F) water bath and determine the mass after 10 ± 1 min immersion. Designate the mass of the container and the sample in water as *B.*
Note 9	Delete
Note 10	Delete

Illinois Modified Test Procedure
Effective Date: February 5, 2008
Revised Date: February 1, 2014

Standard Method of Test
for
Maximum Specific Gravity of Bituminous Paving Mixtures

Reference AASHTO T 209-05

AASHTO ***Section***	***Illinois Modification***
10.1.1	Replace with the following: *Weighing in Water:* Theoretical Maximum Specific Gravity $= \dfrac{A}{A-(B-C)}$ where: *A* = mass of oven-dry sample in air, g; B = mass of sample and pycnometer submerged in water at 25°C (77°F), g; and C = mass of pycnometer submerged in water at 25°C (77°F), g.
10.1.3.1	Delete
10.1.3.2	Delete
Figure 5	Delete
Figure 6	Delete
Note 11	Delete
10.1.4	Delete
Note 12	Delete
11	This section shall be used only with approval of the Engineer.
Table 1	Delete
Appendix	Delete

This Page Reserved

Illinois Modified Test Procedure
Effective Date: February 1, 2014

Standard Method of Test
for
Determination of Moisture in Soils by Means of a Calcium Carbide Gas Pressure Moisture Tester

Reference AASHTO T 217-13

AASHTO Section	***Illinois Modification***
2.1	Revise as follows: AASHTO T 265 (Illinois Modified) To maintain brevity in the text, the following will apply: **Example:** AASHTO T 265 (Illinois Modified) will be designated as “T 265”.
2.2	Revise as follows: ASTM E 29 (Illinois Modified) Standard Practice for Using Significant Digits In Test Data to Determine Conformance with Specifications To maintain brevity in the text, the following will apply: **Example:** ASTM E 29 (Illinois Modified) will be designated as “ASTM E 29”.
5. and 6.	Add as follows: All rounding shall be according to ASTM E 29.

This Page Reserved

Illinois Modified Test Procedure
Effective Date: February 1, 2014

Standard Method of Test
for
Correction of Coarse Particles in the Soil Compaction Test

Reference AASHTO T 224-10

AASHTO Section	***Illinois Modification***
2.1	Revise as follows: Illinois Test Procedure 85 replaces T 85 AASHTO T 99 (Illinois Modified) AASHTO T 180 (Illinois Modified) AASHTO T 217 (Illinois Modified) Illinois Test Procedure 255 replaces T 255 AASHTO T 265 (Illinois Modified) AASHTO T 272 (Illinois Modified) To maintain brevity in the text, the following will apply: **Example:** AASHTO T 99 (Illinois Modified) will be designated as "T 99." All references to "AASHTO T 85" or "T 85" shall be understood to refer to Illinois Test Procedure 85.
2.2 New Section	Add as follows: ASTM E 29 (Illinois Modified) Standard Practice for Using Significant Digits In Test Data to Determine Conformance with Specifications To maintain brevity in the text, the following will apply: **Example:** ASTM E 29 (Illinois Modified) will be designated as "ASTM E 29."
4.3 New Section	Add as follows: All rounding shall be according to ASTM E 29.

This Page Reserved

Illinois Modified Test Procedure
Effective Date: February 1, 2014

Standard Method of Test
for
Capping Cylindrical Concrete Specimens

Reference AASHTO T 231-13

AASHTO Section	***Illinois Modification***
2.2	Add as follows: ASTM E 29 (Illinois Modified) Standard Practice for Using Significant Digits in Test Data to Determine Conformance with Specifications To maintain brevity in the text, the following will apply: **Example:** ASTM E 29 (Illinois Modified) will be designated as "ASTM E 29."
5.2.1	Add as follows: All rounding shall be according to ASTM E 29.
5.2.2	Add as follows: All rounding shall be according to ASTM E 29.

This Page Reserved

Illinois Modified Test Procedure
Effective Date: June 1, 2012

Standard Method of Test
for
Resistance to Plastic Flow of Bituminous Mixtures Using Marshall Apparatus

Reference AASHTO T 245-97 (2008)

AASHTO Section	***Illinois Modification***
2.3 NOTE 2	Replace with the following: **NOTE 2**—The compaction hammer shall be an automatic hammer with a fixed (non-rotating) base.
2.8	Replace with the following: *X-Y Stress-Strain Recorder*—One X-Y stress-strain recorder graduated to 0.25 mm (0.01 inch) is required.
2.11	Replace with the following: *Sample Splitter*—An approved mechanical sample splitter as specified in AASHTO T 248 (Illinois Modified) is required.
3.3.2	Replace with the following: A compaction temperature of 146 ± 3 °C (295 ± 5 °F) is required. In design, the pans shall be covered and held in the oven for a minimum of 1 hour.
3.5.1	Revise the third sentence as follows: Place the entire batch into the mold.
3.5.2	Revise the fifth sentence as follows: After compaction, let mold and sample cool for 1 hour ± 15 minutes before extracting the sample from the mold.
4.1	Revise the first and second sentences as follows: Bring the specimens prepared with asphalt cement to the specified temperature by immersing in the water bath for 1 hour. Maintain the bath temperature at 60 ± 1 °C (140 ± 1.8 °F).
4.1	Revise the fifth sentence as follows: Thoroughly clean the guide rods and the inside surfaces of the test heads prior to making the test and lubricate the guide rods and breaking head with a kerosene cloth.
4.1	Delete references to the flowmeter; it is not required.
4.2	Delete reference to manually recording the maximum load and flowmeter reading; it is not required.

This Page Reserved

Illinois Modified Test Procedure
Effective Date: March 1, 2013

Standard Method of Test
for
Laboratory Determination of Moisture Content of Soils

Reference AASHTO T 265-12

AASHTO Section	***Illinois Modification***
1.2	Revise as follows: The following applies to all specified limits in this standard: For the purposes of determining conformance with these specifications, an observed value or a calculated value shall be rounded off according to Illinois Modified ASTM E 29.
2.2	Revise as follows: ASTM E 29 (Illinois Modified) Standard Practice for Using Significant Digits In Test Data to Determine Conformance with Specifications To maintain brevity in the text, the following will apply: **Example:** ASTM E 29 (Illinois Modified) will be designated as "ASTM E 29."

This Page Reserved

Illinois Modified Test Procedure
Effective Date: February 1, 2014

Standard Method of Test
for
Family of Curves - One-Point Method

Reference AASHTO T 272-10

AASHTO Section	***Illinois Modification***
2.1	Revise as follows: Illinois Test Procedure 19 replaces T 19M/T 19 AASHTO T 99 (Illinois Modified) AASHTO T 180 (Illinois Modified) AASHTO T 224 (Illinois Modified) To maintain brevity in the text, the following will apply: Example: AASHTO T 99 (Illinois Modified) will be designated as "T 99." All references to "AASHTO T 19M/T 19" or "T 19" shall be understood to refer to Illinois Test Procedure 19.
2.2 New Section	Add as follows: ASTM E 29 (Illinois Modified) Standard Practice for Using Significant Digits In Test Data to Determine Conformance with Specifications To maintain brevity in the text, the following will apply: Example: ASTM E 29 (Illinois Modified) will be designated as "ASTM E 29."
4.1	Revise as follows: See T 99, Section 3, except a thermostatically controlled drying oven is not required to dry soil for field tests. A microwave oven, hot plate, electric heat lamp, kitchen stove, camp stove, grill or any other apparatus capable of drying soil to a constant mass may be used. Care shall be made to not degrade or otherwise adversely affect the soil (Note 1). Note 1: Burning the soil may drive off organic material, which will result in moisture measurements higher than the true value. Rapid heating of the soil may cause particles to explode and loss of material, which will also result in moisture measurements higher than the true value. Therefore, stir the soil sample when drying to accelerate the operation and avoid localized overheating.
5.1, 7.1, 9.1, and 11.1	Add as follows: For field tests, sieving according to t 99 or as referenced herein is not required. As an alternative, thoroughly break up soil aggregations until no piece is larger than 12 mm (0.5 in.). Discard any piece larger than 12 mm (0.5 in.).
6.1 and 10.1	Add the following after the first sentence: The need for adding water is determined by moisture content of the field sample.
6., 8., 10., and 12.	Add as follows: All rounding shall be according to ASTM E 29.

This Page Reserved

Illinois Modified Test Procedure
Effective Date: March 1, 2003
Revised Date: June 1, 2012

Standard Method of Test
For
Resistance of Compacted Bituminous Mixture to Moisture-Induced Damage

Reference AASHTO T 283-07

AASHTO Section	***Illinois Modification***
1.1	Replace the first sentence with the following: This method covers preparation of specimens and the measurement of the change of diametral tensile strength resulting from the effects of water saturation and accelerated water conditioning of compacted asphalt mixtures.
2.1	Replace with the following: *Referenced Illinois modified AASHTO Standards:* ▪ R 30, Mixture Conditioning of Hot-Mix Asphalt (HMA) ▪ T 166, Bulk Specific Gravity of Compacted Bituminous Mixtures Using Saturated Surface-Dry Specimens ▪ T 209, Theoretical Maximum Specific Gravity and Density of Bituminous Paving Mixtures ▪ T 245, Resistance to Plastic Flow of Bituminous Mixtures Using Marshall Apparatus ▪ T 312, Preparing and Determining the Density of Hot-Mix Asphalt (HMA) Specimens by Means of the Superpave Gyratory Compactor
2.1.1	▪ Illinois Manual of Test Procedures, Appendix B17, Procedure for Introducing Additives to Hot Mix Asphalt Mixtures and Testing in the Lab
2.2	Replace with the following: *ASTM Standards:* ▪ D 979, Sampling Bituminous Paving Mixtures ▪ D 2041, Theoretical Maximum Specific Gravity and Density of Bituminous Paving Mixtures
3.1	Replace the first sentence with the following: As noted in the scope, this method is intended to evaluate the effects of saturation and accelerated water conditioning of compacted asphalt mixtures.
3.2	Replace with the following: Numerical indices of retained indirect-tensile properties are obtained by comparing the properties of laboratory specimens subjected to moisture conditioning with the similar properties of dry specimens.

Illinois Modified Test Procedure
Effective Date: March 1, 2003
Revised Date: June 1, 2012

Standard Method of Test
For
Resistance of Compacted Bituminous Mixture to Moisture-Induced Damage

Reference AASHTO T 283-07

AASHTO Section	***Illinois Modification***
4.1	Replace the fourth sentence with the following: The other subset is subjected to vacuum saturation**,** followed by a warm-water soaking cycle, before being tested for indirect tensile strength.
5.1	Replace with the following: Equipment for preparing and compacting specimens from T 312.
5.5	Delete
5.6	Delete
5.7	Delete
5.11	Replace the second sentence with the following: For 100 mm (4 in.) diameter field-mixed, field-compacted pavement cores only, the loading strips shall be 12.7 mm (0.5 in.) wide and for all specimens 150 mm (5.91 in.) diameter, the loading strips shall be 19.05 mm (0.75 in.) wide.
6.1	Replace the first paragraph with the following: Make at least six specimens for each test, half to be tested dry and the other half to be tested after partial saturation and moisture conditioning (Note 1).
6.2	Replace with the following: Specimens 150 mm (5.91 in.) diameter by 95 ± 5 mm (3.75 ± 0.20 in.) thick are used.
6.3	Replace with the following: Preparing Mixtures and Batching
6.3.1 New Section	If preparing a multi-specimen batch, split the batch into single-specimen quantities before placing in the oven.
6.3.2 New Section	When an anti-stripping additive is used, the procedure in Appendix B17 of the Illinois Manual of Test Procedures for adding and mixing the additive shall be followed.

Illinois Modified Test Procedure
Effective Date: March 1, 2003
Revised Date: June 1, 2012

Standard Method of Test
For
Resistance of Compacted Bituminous Mixture to Moisture-Induced Damage

Reference AASHTO T 283-07

AASHTO Section	***Illinois Modification***
6.3.3 New Section	Odor neutralizing additives, if used, shall be added to the asphalt binder according to the manufacturer's recommended dosage rate and procedure prior to mixing the asphalt with the heated aggregates.
6.4	Delete
6.5	Replace with the following: Short-term aging of laboratory prepared mixtures shall be done according to Illinois-modified AASHTO R 30. Compact the specimens according to the method in T 312. The mixture shall be compacted to 7.0 ± 0.5 percent air voids. The most effective way to adjust voids, while maintaining a compacted height of 95 mm is to make slight changes in the weight of the loose material to be compacted. The exact procedure must be determined experimentally for each mixture before compacting the specimens for each set (Note 2).
6.6	Replace with the following: Allow the extracted specimens to cool to a room temperature 25 ± 5 °C (77 ± 9 °F).
7.1	Replace with the following: Make at least six specimens for each test, half to be tested dry and the other half to be tested after partial saturation and moisture conditioning (Note 1).
7.2	Replace with the following: Specimens 150 mm (5.91 in.) in diameter by 95 ± 5 mm (3.75 ± 0.20 in.) thick are used.
7.4	Replace with the following: No loose-mix curing as described in Section 6.4 shall be performed on the field-mixed samples. After sampling, place the mixture in an oven until it reaches the compaction temperature ± 3°C (5°F). Then, compact the specimen according to the method in T 312. The mixture shall be compacted to 7.0 ± 0.5 percent air voids. The most effective way to adjust voids, while maintaining a compacted height of 95 mm is to make slight changes in the weight of the loose material to be compacted. The exact procedure must be determined experimentally for each mixture before compacting the specimens for each set (Note 2).

Illinois Modified Test Procedure
Effective Date: March 1, 2003
Revised Date: June 1, 2012

Standard Method of Test
For
Resistance of Compacted Bituminous Mixture to Moisture-Induced Damage

Reference AASHTO T 283-07

AASHTO Section	***Illinois Modification***
7.5	Replace with the following: Allow the extracted specimens to cool to a room temperature of 25 ± 5°C (77 ± 9°F).
8.1.1 New Section	The pavement may be cored with the objective of performing a forensic analysis of the in-situ conditions of the in-place, compacted mixture. In that case, the core specimens should be kept in a leak-proof plastic bag until testing to preserve the in-situ conditions. The testing should be conducted as soon as possible after coring.
9.2	Replace with the following: Use the gyratory compactor height printout sheet to determine the specimen thickness (t). If the gyratory height printout sheet is not available determine the specimen thickness by taking four measurements at approximately quarter points on the periphery of the specimen and recording the average of these measurements as the thickness of the specimen.
9.6	Replace the second sentence with the following: For those specimens to be subjected to vacuum saturation and a warm-water soaking cycle, calculate the volume of air voids (V_a) in cubic centimeters using the following equation:
10.1	Replace with the following: One subset will be tested dry, and the other will be partially vacuum-saturated and soaked in warm water before testing.
10.2	Replace the first sentence with the following: The dry subset will be stored at room temperature until testing. Delete the second sentence.
10.3.1	Replace with the following: Place the specimen in the vacuum container. Fill the container with potable water at room temperature so that the specimens have at least 25 mm (1 in.) of water above their surface. Apply a vacuum of 13 to 67 kPa absolute pressure (10 to 26 in. Hg partial pressure) for a short time (approximately 1 to 10 minutes). Remove the vacuum and leave the specimen submerged in water for a short time (approximately 1 to 10 minutes).

Illinois Modified Test Procedure
Effective Date: March 1, 2003
Revised Date: June 1, 2012

Standard Method of Test
For
Resistance of Compacted Bituminous Mixture to Moisture-Induced Damage

Reference AASHTO T 283-07

AASHTO Section	***Illinois Modification***
10.3.7	Delete.
10.3.8	Replace the first sentence with the following: Place the specimens, flat side down, into a 60 ± 1 °C (140 ± 1.8° F) water bath for 24 ± 1 hours. Delete the last sentence.
11.2	Replace the first sentence with the following: Remove the specimen from the 25 ± 1°C (77 ± 1.8°F) water bath. Insert the following at the end: Note 4: If a chart recorder is used, the 10,000 pound scale should be used for 150 mm (5.91 in.) specimens and the 5,000 pound scale should be used for 4 in. (100 mm) field pavement core specimens.
11.3	Replace the last sentence with the following: Inspect the interior surface for evidence of cracked or broken aggregate; visually estimate the approximate degree of moisture damage on a scale from "1" to "3" (with "3" being the most stripped) according to the Illinois procedure "Stripping of Bituminous Mixtures Visual Identification and Classification" and record the observations.
12.1 New Notes	Add the following at the end: Note 5. The actual diameter of a gyratory specimen is 150 mm (5.91 in.). Note 6: If the strength is converted from metric to English units, use the factor: 1 kPa = 0.14504 psi (1 psi = 6.895 kPa). The minimum acceptable tensile strength shall be 60 psi.

Illinois Modified Test Procedure
Effective Date: March 1, 2003
Revised Date: June 1, 2012

Standard Method of Test
For
Resistance of Compacted Bituminous Mixture to Moisture-Induced Damage

Reference AASHTO T 283-07

AASHTO Section	***Illinois Modification***
12.2	Replace the first sentence with the following: Express the numerical index of resistance of asphalt mixtures to the detrimental effect of water as the ratio of the original strength that is retained after the moisture conditioning. Add the following at the end: The minimum TSR for 150 mm (5.91 in.) specimens shall be 0.85. The minimum TSR for 4-inch (100 mm) field-mixed, field-compacted pavement cores only shall be 0.75.

Illinois Modified Test Procedure
Effective Date: June 1, 2012
Revised Date: February 1, 2014

Standard Method of Test
for
Asphalt Binder Content of Asphalt Mixtures by the Nuclear Method

Reference AASHTO T 287-06 (2010)

AASHTO Section	***Illinois Modification***
2.1	Replace the individual AASHTO Standards with the appropriate Illinois modified AASHTO Standards:
2.1	Replace AASHTO Standard T 2, T 11, T 27, and T248 with the following: • Illinois Test Procedure 2 • Illinois Test Procedure 11 • Illinois Test Procedure 27 • Illinois Test Procedure 248
2.2 New Section	Manufacturer's instruction manual
3.3	Replace the first sentence with the following: Accurate results are dependent upon proper calibration of the nuclear gauge to the material being tested as covered in Appendix A.
3.4	Replace the second sentence with the following: The moisture sample shall be weighed immediately, prior to beginning the test count, and this value shall be recorded as the original sample weight. The sample to be tested for moisture content shall be placed in a 110 ± 5 °C (230 ± 9 °F) oven at the time the mixture test count is being performed. Drying of the moisture sample shall continue until it reaches constant mass. Constant mass (oven dry) is defined as less than 0.5 g loss in 1 hour. This weight shall be recorded as the oven-dry weight. Moisture content is determined as follows: $\text{Moisture Content} = \left(\frac{[\text{Original Sample Weight} - \text{Oven Dry Weight}]}{\text{Oven Dry Weight}}\right) \text{x } 100$
3.4 New Note	Add New **Note 1**: **Note 1**—The moisture content determined from the previous test can be used to adjust the apparent asphalt content for quality control purposes only. The actual moisture content of the current sample shall be determined and used to correct the apparent asphalt content (nuclear gauge reading). The corrected asphalt content is plotted on the control charts and used for acceptance purposes.

Illinois Modified Test Procedure
Effective Date: June 1, 2012
Revised Date: February 1, 2014

Standard Method of Test
for
Asphalt Binder Content of Asphalt Mixtures by the Nuclear Method

Reference AASHTO T 287-06 (2010)

AASHTO Section	***Illinois Modification***
4.1	Replace with the following: Nuclear asphalt binder content gauge system, capable of at least a 3-point calibration, consisting of:
4.2	Replace with the following: Mechanical mixer with a minimum 10-kg (22-lb) capacity, capable of producing a completely mixed, well-coated, homogenous asphalt mixture.
4.6.2	Delete
4.8	Replace with the following: Thermometers, metal-stemmed, armored type, with a temperature range 10 to 260 °C (50 to 500 °F), readable to 3 °C (5 °F).
4.9.1 New Section	Heat-resistant gloves.
5.2	Add the following between the second and third sentences: The location of the gauge for field-testing requires the gauge to be in the exact location used during calibration.
6.1	Replace with the following: Once a calibration is performed on a specific gauge, no mathematical transfer of the calibration to another gauge will be allowed. The original calibration pans shall be used to calibrate the new gauge.
7.2	Replace with the following: If the background count has not changed by more than 1.0 percent from the average of the previous 4 background counts, then the apparatus shall be considered stable and acceptable for use. If the gauge has been moved or the surrounding conditions have changed, additional background counts must be obtained until the 1.0 percent standard is satisfied.
8.	Rename: **PROCEDURE FOR PRODUCTION TESTING**

Illinois Modified Test Procedure
Effective Date: June 1, 2012
Revised Date: February 1, 2014

Standard Method of Test
for
Asphalt Binder Content of Asphalt Mixtures by the Nuclear Method

Reference AASHTO T 287-06 (2010)

AASHTO Section	***Illinois Modification***
8.1	Replace with the following: Obtain samples of freshly produced asphalt concrete according to Illinois Department of Transportation document, "HMA QC/QA Initial Daily Plant and Random Samples".
8.3	Add the following at the end: The material shall be rodded into the corners of the gauge pan to eliminate large voids.
8.4	Replace with the following: Place additional asphalt mixture into the pan until the required mass, as determined in Appendix A, is reached within ± 5 g.
8.6 Note 1	Change to **Note 2**
8.6 New Note	Add New **Note 3**: **Note 3** - Asphalt samples should not remain in the oven to re-heat for longer than 4 hours prior to placement in the gauge. Loss of hydrogen could cause an inaccurate count.
8.7	Add the following at the end of the last sentence: or according to the manufacturer's instructions.
8.8	Replace the second sentence with the following: Record the uncorrected asphalt binder content obtained from the reading taken in section 8.7 to the nearest 0.1 percent.
10.1	Replace with the following: The report shall be the Illinois Department of Transportation MI 308 form or on the form generated by the Department's current QC/QA software.
10.2 New Section	*Information to be recorded in a data book or diary:*

Illinois Modified Test Procedure
Effective Date: June 1, 2012
Revised Date: February 1, 2014

Standard Method of Test
for
Asphalt Binder Content of Asphalt Mixtures by the Nuclear Method

Reference AASHTO T 287-06 (2010)

AASHTO Section	***Illinois Modification***
10.1.1 through 10.1.13	Rename as sections 10.2.1 through 10.2.13
Annexes	Replace with the following: **APPENDICES**
A1.1	Replace with the following: This appendix covers the preparation of samples for, and the calibration of, nuclear asphalt binder content gauges.
A3.5	Delete
A3.5.1	Delete
A3.5.2	Delete
A3.5.3	Delete
A4.1	Add at the end of the second sentence: according to the Manual of Test Procedures Appendix B17, *Procedure for Introducing Additives to Hot Mix Asphalt Mixtures and Testing in the Lab,* Section 4.0 (D) (5) Liquid Anti-strip.
A4.2.1	Replace the last paragraph with the following: Asphalt binder contents will be chosen at the optimum asphalt binder content and at increments of ±1.0 percent from the optimum asphalt binder content. The minimum four samples are at 1.0 below, optimum, 1.0 above, and 1.6 percent above the optimum.
A4.3	Delete
A4.3.1	Delete
A4.3.2	Delete

Illinois Modified Test Procedure
Effective Date: June 1, 2012
Revised Date: February 1, 2014

Standard Method of Test
for
Asphalt Binder Content of Asphalt Mixtures by the Nuclear Method

Reference AASHTO T 287-06 (2010)

AASHTO Section	***Illinois Modification***
A6.1 Note A3	Replace with the following: **Note A3** - To find an appropriate starting mass, place the dry aggregate in a gauge-sample pan. Fill the sample pan one-half full, evenly distributing the sample in the pan. Level the HMA mixture with a trowel or spatula. Fill the remainder of the pan until the weight of the HMA mixture in the pan equals the dry aggregate weight. If the pan is not full, fill the pan to the point that the HMA mixture is mounded slightly above the top of the pan. Record the weight of the HMA mixture in the pan. This is the weight that is to be used for all calibration and test samples using this calibration. Level the top of the HMA mixture using a spatula or trowel. Use the metal plate or plywood to consolidate the HMA mixture until it is even with the top edge of the pan. All specimens should be compacted at a temperature between 121˚ and 149˚ ± 6˚C (250˚ and 300˚ ± 10˚F) to ensure that the mix will compact properly.
A6.4	Add the following after the first sentence: The material shall be rodded into the corners of the pan to eliminate large voids.
A7.2	Replace the last sentence with the following: At a minimum, use 1.0 below, optimum, 1.0 above, and 1.6 percent above the optimum asphalt binder content when making the calibration-curve pans.
A8.1	Replace the first sentence with the following: Prepare four aggregate samples, or number recommended by the manufacturer, using the target mass determined in Section A6.7.
A8.5	Add the following after the first sentence: The material shall be rodded into the corners of the gauge pan to eliminate large voids.
A8.8 New Note	Add New **Note A4**: **Note A4** - If the gauge does not have temperature compensation capabilities, determine and record the temperature of the HMA mixture compacted into the pan to use as the target temperature for testing field samples.
A8.9 Note A4	Change to **Note A5**:

Illinois Modified Test Procedure
Effective Date: June 1, 2012
Revised Date: February 1, 2014

Standard Method of Test
for
Asphalt Binder Content of Asphalt Mixtures by the Nuclear Method

Reference AASHTO T 287-06 (2010)

AASHTO Section	***Illinois Modification***
A10	Delete Entire Section
Appendix B New Section	Dry Aggregate Standard Count
B1 New Section	Turn on the equipment and allow for stabilization of the equipment in accordance with the manufacturer's recommendations.
B2 New Section	Fill the sample pan one-half full of hot dry aggregate dried to constant weight and at the temperature of the aggregate sample used during calibration ±6˚C (±10˚F). Place the dry hot aggregate in a tared sample pan in two equal layers. For each layer, raise and drop the pan approximately one inch, four times. Be sure that the pan bottom strikes evenly. Use a spatula to distribute the aggregate to avoid segregation. Add to or remove aggregate until the weight of aggregate in the pan is equal to the weight of aggregate used in the calibration. Using a straightedge, level the top of the aggregate sample until it is even with the top of the sample pan. Obtain and record the temperature of the sample.
B3 New Section	Place the hot blended aggregate into the gauge and proceed as per manufacturer's instruction for operation of the equipment and the sequence of operation. This dry aggregate count is used to determine changes in aggregates which affect counts.
B3 New Note	Add New **Note B1**: **Note B1** - If a significant change is noted (± 0.5 percent) from the calibration aggregate count, a new calibration should be run.

AASHTO T 305

Determination of Draindown Characteristics in Uncompacted Asphalt Mixtures

AASHTO T 305 test method, Determination of Draindown Characteristics in Uncompacted Asphalt Mixtures, cannot be reproduced in this manual due to copyright. AASHTO standards may be requested from the address below:

AASHTO
444 North Capitol Street, N. W.
Suite 249
Washington, D.C. 20001
(202) 624-5800
www.transportation.org

This Page Reserved

Illinois Modified Test Procedure
Effective Date: January 1, 2002
Revised: February 1, 2014

Standard Method of Test
for
Determining the Asphalt Binder Content of Hot-Mix Asphalt (HMA) by the Ignition Method

Reference AASHTO T 308-09

AASHTO Section	***Illinois Modification***
1.1	Revise the first sentence as follows: This test method covers the determination of asphalt binder content of HMA by ignition of the asphalt binder at 482 °C (900 °F) or less in a furnace.
2.1	Revise reference to the individual Standards as follows: T 30 (Illinois Modified) Replace AASHTO Standards T 2 and T 248 with the following: • Illinois Test Procedure 2 • Illinois Test Procedure 248
5.3	Replace with the following: *Oven*—An oven of sufficient size, specifically built for drying, capable of maintaining a uniform temperature of 110 ± 5 °C (230 ± 9 °F) shall be used. No other heat source for drying is permitted.
5.6	Replace with the following: *Miscellaneous Equipment*—A pan with dimensions (L x W x H) 600 mm x 600 mm x 150 mm (24 in. x 24 in. x 6 in.) minimum for transferring samples after ignition.
6.2	Add the following: A minimum sample of 1 kg shall be split out to determine the moisture content.
7.1.1	Revise the first sentence as follows: For the Convection-type furnace, preheat the ignition furnace to 482 °C (900 °F).

Illinois Modified Test Procedure
Effective Date: January 1, 2002
Revised: February 1, 2014

Standard Method of Test
for
Determining the Asphalt Binder Content of Hot-Mix Asphalt (HMA) by the Ignition Method
(continued)
Reference AASHTO T 308-09

AASHTO Section	***Illinois Modification***
7.2	Replace with the following: Obtain and split a HMA sample(s) according to Sections 6.2, 6.4, and A2.2 herein. Test for moisture as follows: Determine the mass of the moisture content sample immediately after splitting as outlined in Section 6.2 herein. Record this value as the original sample mass. Place this sample in a 110 ± 5 °C (230 ± 9 °F) drying oven and continue drying until it reaches a constant mass. Constant mass shall be defined as the mass at which further drying does not alter the mass more than 0.5 gram in 1 hour. Moisture content is determined as follows: $\% \, Moisture \ Content \ (M_C) = \frac{(Original \ Sample \ Mass) - (Constant \ Mass)}{Constant \ Mass} \times 100$
8.1	Replace with the following: Preheat the ignition furnace to 482 °C (900 °F).

Illinois Modified Test Procedure
Effective Date: January 1, 2002
Revised: February 1, 2014

Standard Method of Test
for
Determining the Asphalt Binder Content of Hot-Mix Asphalt (HMA) by the Ignition Method
(continued)
Reference AASHTO T 308-09

AASHTO Section	***Illinois Modification***
8.2	Replace with the following: Obtain and split a HMA sample(s) according to Sections 6.2, 6.4, and A2.2 herein. Test for moisture as follows: Determine the mass of the moisture content sample immediately after splitting as outlined in Section 6.2 herein. Record this value as the original sample mass. Place this sample in a 110 ± 5 °C (230 ± 9 °F) drying oven and continue drying until it reaches a constant mass. Constant mass shall be defined as the mass at which further drying does not alter the mass more than 0.5 gram in 1 hour. Moisture content is determined as follows: $\% \, Moisture \, Content \, (M_C) = \frac{(Original \, Sample \, Mass) - (Constant \, Mass)}{Constant \, Mass} \times 100$
8.7	Revise the second sentence with the following: Burn the HMA sample in the furnace for at least 60 minutes.
8.7 NOTE 7	Delete the second sentence.
8.8	Replace with the following: After ignition, open the chamber door, remove the specimen and specimen basket assembly from the furnace, and place it on a cooling plate or block. Place the protective cage over the specimen basket assembly and allow it to cool in a 110 ± 5 °C (230 ± 9 °F) drying oven until the specimen stabilizes at 110 ± 5 °C (230 ± 9 °F). Weigh and record the constant mass (M_f).
8.9 through 8.15	Delete.

Illinois Modified Test Procedure
Effective Date: January 1, 2002
Revised: February 1, 2014

Standard Method of Test
for
Determining the Asphalt Binder Content of Hot-Mix Asphalt (HMA) by the Ignition Method
(continued)
Reference AASHTO T 308-09

AASHTO Section	***Illinois Modification***
9.3 New Section	Correct the aggregate gradation by subtracting the degradation computed in Section 9.2 herein from the percent passing on the respective sieves.
10.1.9	Add the following: All rounding shall be according to ASTM E 29 (Illinois Modified).
A1.1	Revise the third sentence as follows: Correction factor(s) must be determined each time a change in the mix ingredients or design occurs.
A1.1.1	Delete the first two sentences.
A2.4	Revise the first sentence as follows: According to the requirements of the current Hot Mix Asphalt QC/QA Level III (Design) Course, prepare two calibration specimens at the design asphalt content.
A2.5	Revise the second sentence as follows: If allowed to cool, the specimens must be preheated in a 110 ± 5 °C (230 ± 9 °F) oven for 25 minutes.
A2.8.1	Delete.

This Page Reserved

AASHTO T 309 has been replaced by ASTM C1064/C1064M.

This Page Reserved

AASHTO T 309 has been replaced by ASTM C1064/C1064M.

Illinois Modified Test Procedure
Effective Date: February 1, 2014

Standard Test Method
for
In-Place Density and Moisture Content of Soil
and
Soil-Aggregate by Nuclear Methods (Shallow Depth)

Reference AASHTO T 310-13

AASHTO Section	***Illinois Modification***
1.1	Replace with the following: This test method describes the procedure for determining the in-place density of soil and soil-aggregate by use of nuclear gauge. The density of the material shall be determined by the direct transmission method. The moisture of the material is only determined from measurements taken at the surface of the soil (i.e., Backscatter).
2.1	Revise as follows: AASHTO T 99 (Illinois Modified) AASHTO T 180 (Illinois Modified) AASHTO T 191 (Illinois Modified) AASHTO T 217 (Illinois Modified) AASHTO T 224 (Illinois Modified) Illinois Test Procedure 255 replaces T 255 AASHTO T 265 (Illinois Modified) AASHTO T 272 (Illinois Modified) To maintain brevity in the text, the following will apply: **Example:** AASHTO T 99 (Illinois Modified) will be designated as "T 99." All references to "AASHTO T 255" or "T 255" shall be understood to refer to Illinois Test Procedure 255.
2.2	Add as follows: ASTM E 29 (Illinois Modified) — Standard Practice for Using Significant Digits In Test Data to Determine Conformance with Specifications ASTM D 2216 — Standard Test Method for Laboratory Determination of Water (Moisture) Content of Soil and Rock Mass To maintain brevity in the text, the following will apply: **Example:** ASTM E 29 (Illinois Modified) will be designated as "ASTM E 29."
3.4	Replace T 265 with ASTM D 2216.
4.2.1	Replace with the following: The chemical composition of the sample may dramatically affect the measurement and adjustments may be necessary. Hydrogen in forms other than water, as defined by ASTM D 2216, and carbon will cause measurements in excess of the true value. Examples are road oil and asphalt. Chemically bound water such as found in gypsum will cause measurements in excess of the true value. Some chemical elements such as boron, chlorine, and minute quantities of cadmium will cause measurements lower than the true value. Soils containing iron or iron oxides, having a higher capture cross section (absorption of neutrons), will cause measurements lower than the true value.

Standard Test Method
for
In-Place Density and Moisture Content of Soil
and
Soil-Aggregate by Nuclear Methods (Shallow Depth)
(continued)
Reference AASHTO T 310-13

AASHTO Section	***Illinois Modification***
4.2.1 continued	To obtain an accurate in-place moisture content when the soil material may adversely affect measurements, or an unfamiliar soil material is used, the following procedure shall be followed: Adjustment of Measured Soil Moisture as Obtained by the Nuclear Gauge **Step 1.** Perform 10 nuclear moisture determinations according to AASHTO T 310. **Step 2.** Perform 10 oven-dry moisture determinations according to AASHTO T 265 on samples obtained according to Section 9.6. **Step 3.** Perform 10 nuclear wet density determinations according to AASHTO T 310. **Step 4.** Convert oven-dry moisture (%) obtained in Step 2, to oven-dry moisture in kg/m^3 (lbm/ft^3) using the following: $\frac{\text{OVEN-DRY MOISTURE (\%) x NUCLEAR WET DENSITY (kg/m}^3\text{ or lbm/ft}^3\text{)}}{\text{OVEN DRY MOISTURE (\%) + 100}}$ = OVEN-DRY MOISTURE (kg/m^3 or lbm/ft^3) **Step 5.** Average the 10 values of oven-dry moisture (kg/m^3 or lbm/ft^3) obtained in Step 4. Average the 10 values of nuclear moisture (kg/m^3 or lbm/ft^3) obtained in Step 1. **Step 6.** Subtract the average oven-dry moisture obtained in Step 5 from the average nuclear moisture obtained in Step 5. **Step 7.** Apply the average difference obtained in Step 6, as an "adjustment factor", to all subsequent nuclear moisture test results for the given soil. FIELD OPTION FOR DRYING SOIL For field work, a thermostatically controlled drying oven is normally not available, as mentions in AASHTO T 265. Therefore, a microwave oven, hot plate, electric heat lamp, kitchen stove, camp stove, grill or any other apparatus capable of drying soil to a constant mass may be used. When using any of the previously mentioned equipment, care must be made to not degrade or otherwise adversely affect the soil. An example would be burning the soil, which may drive off organic material. This would cause moisture measurements higher than the true value. Care must also be made to avoid rapid heating of the soil, which may cause some particles to explode. This would result in the loss of particles. Therefore, stir the soil sample when drying to accelerate the operation and avoid localized overheating.

Standard Test Method
for
In-Place Density and Moisture Content of Soil
and
Soil-Aggregate by Nuclear Methods (Shallow Depth)
(continued)
Reference AASHTO T 310-13

AASHTO Section	***Illinois Modification***
8.3 New Section	Add as follows: All rounding shall be according to ASTM E 29.
9.5.1	Replace with the following: The following procedures shall be used for measurements using the nuclear method in trenches, and around abutments, culverts or other objects either buried or protruding from the surface of the ground.
9.5.1.1	OBJECTS BURIED BELOW THE SURFACE OF MATERIAL TO BE TESTED (a) Backscatter moisture tests may be used if a minimum of 150 mm (6 in.) of cover material is present. (b) Direct transmission density tests may be used if a minimum of 75 mm (3 in.) of cover material is present below the probe tip. The hole shall be a minimum of 50 mm (2 in.) deeper than the desired measurement as per 9.5.2, plus an additional minimum 25 mm (1 in.)
9.5.1.2	TRENCHES, ABUTMENTS, CULVERTS AND OTHER OBJECTS (a) Direct transmission density tests may be taken in trenches immediately adjacent to the earth walls, with either the nose or side of the gauge toward the wall. (b) Direct transmission density tests may be taken next to abutments, culverts, and other objects if the nose of the gauge is a minimum of 150 mm (6 in.) from the object or the side of the gauge is a minimum of 300 mm (12 in.) from the object. (c) Backscatter moisture tests may be taken if the following procedures are used to cancel the effect of the object on the test.: (1) The standard count should be taken a minimum of 4.5 m (15 ft.) from any object that will effect the count. (2) Take a standard count in the location (next to object) where the test is to be taken. This count will be higher than the count taken in step (1). Subtract the standard count taken in step (1) from the standard count taken on the spot where the test is to be run. The result is the correction factor. (3) Remove the reference block and take the moisture count (next to the object). Now subtract the correction factor from this moisture count. (4) Divide this corrected moisture count by the standard count taken away from the object in step (1). This gives the corrected count ratio to be used.

Illinois Modified Test Procedure
Effective Date: February 1, 2014

Standard Test Method
for
In-Place Density and Moisture Content of Soil
and
Soil-Aggregate by Nuclear Methods (Shallow Depth)
(continued)
Reference AASHTO T 310-13

AASHTO Section	***Illinois Modification***
9.7 New Section	Add as follows: All rounding shall be according to ASTM E 29.
10.2.2 New Section	Add as follows: If representative samples of material are to be taken for purposes of correlation with other test methods or rock correction, the volume measured can be approximated by a 200-mm (8-in.) diameter cylinder located directly under the center line of the radioactive source and detector(s). The height of the cylinder to be excavated will be the depth setting of the source rod when using the Direct Transmission method or approximately 75 mm (3 in.) when using the Backscatter Method.
10.2.3 New Section	Add as follows: An alternate to the correction for oversize particles that can be used with mass density methods or minimal oversize situations involves multiple tests. Three tests may be taken at adjacent locations and the results averaged to get a representative value. Comparisons need to be made to evaluate whether the presence of a single large rock or void in the soil is producing unrepresentative values of density. Whenever values obtained are questionable, the test volume site should be excavated and visually examined.
10.3 New Section	Add as follows: All rounding shall be according to ASTM E 29.
A1.8	Replace with the following: The calibration check shall provide proof of five-block calibration. Calibration standards shall consist of magnesium, aluminum, laminated magnesium/aluminum, granite, and limestone. A sixth calibration standard, utilized for moisture calibrations, shall consist of either laminated magnesium/polyethylene or aluminum/polyethylene. All calibration standards shall be traceable to the National Institute of Standards and Technology (N.I.S.T.). Proof shall consist of documented and dated calibration counts accompanied by copies of an invoice from the calibrating facility.

Illinois Modified Test Procedure
Effective Date: May 1, 2007
Revised Date: February 1, 2014

Standard Method
for
Preparing and Determining the Density of Hot-Mix Asphalt (HMA) Specimens by Means of the Superpave Gyratory Compactor

Reference AASHTO T 312-12

AASHTO Section	***Illinois Modification***
2.1	Replace with the following: *Referenced Illinois modified AASHTO Standards:* ■ M 231, Weighing Devices Used in the Testing of Materials ■ R 30, Mixture Conditioning of Hot-Mix Asphalt (HMA) ■ R 35, Superpave Volumetric Design for Hot-Mix Asphalt (HMA) ■ T 166, Bulk Specific Gravity of Compacted Hot-Mix Asphalt Using Saturated Surface-Dry Specimens ■ T 209, Theoretical Maximum Specific Gravity and Density of Hot-Mix Asphalt Paving Mixtures
2.3 New Section	*Referenced Illinois modified ASTM Standards:* ■ D1188, Bulk Specific Gravity and Density of Compacted Bituminous Mixtures Using Coated Samples
2.4 New Section	*Illinois Procedures:* ■ Illinois Procedure for Internal Angle Calibration of Superpave Gyratory Compactors (SGCs) using the Dynamic Angle Validator (DAV-2)
4.1	Replace the fourth sentence with the following: The compactor shall tilt the specimen molds at an average internal angle of 1.16 ± 0.02 degrees (20.2 ± .035 mrad) determined by the Illinois Procedure for Internal Angle Calibration of the Superpave Gyratory Compactor using the Dynamic Angle Validator (DAV-2).
4.8	Add the following at the end: In addition, the hold-down clamps on the PINE AFG-2 compactor should be adjusted according to the manufacturer's instructions to minimize variability in the characteristics of the final compacted specimen.
4.9 New Section.	*Mold-loading Chute*—A mold-loading chute having a minimum length of 22 in. (560 mm) and a minimum capacity of 130 in.^{3} (2,130 cm^3). It shall be capable of loading an entire gyratory sample in one motion without spillage or segregation.

Illinois Modified Test Procedure
Effective Date: May 1, 2007
Revised Date: February 1, 2014

Standard Method
for
Preparing and Determining the Density of Hot-Mix Asphalt (HMA) Specimens by Means of the SHRP Gyratory Compactor
(continued)
Reference AASHTO T 312-12

AASHTO Section	***Illinois Modification***
6.	Replace entire section with the following: *Calibration*—The gyratory compactor internal angle shall be calibrated according to the "Illinois Procedure for Internal Angle Calibration of Superpave Gyratory Compactors (SGCs) using the Dynamic Angle Validator (DAV-2)". The ram pressure, height and rate of gyration shall be calibrated according to the manufacturer's instructions and shall be completed prior to the internal angle calibration. The internal angle, ram pressure, height and rate of gyration shall be calibrated at a minimum frequency of once per month. The monthly internal angle calibration may be conducted utilizing the external angle verification as outlined in the "Illinois Procedure for Internal Angle Calibration of Superpave Gyratory Compactors (SGCs) using the Dynamic Angle Validator (DAV-2)".
8.1.2.1	Replace with the following: The mixing temperature for unmodified asphalt shall be 295 ± 5 °F (146 ± 3 °C). The mixing temperature for polymer-modified asphalt shall be 325 ± 5 °F (163 ± 3 °C).
8.1.2.1 NOTE 4	Delete.
8.1.4.1 New Section	When necessary, reduce the sample according to Illinois Test Procedure 248 and the following: Place the splitter on a level surface. The splitter and accessory equipment may be heated, not to exceed 110°C (230°F), as determined by a noncontact temperature device. Surfaces of the mechanical splitter that will come in contact with the HMA may be lightly coated with an approved asphalt release agent to prevent a buildup and loss of asphalt binder and fines. The release agent shall not contain any solvents or petroleum-based products that could affect asphalt binder properties.
8.1.7.1	Revise as follows: The compaction temperature shall be 295 ± 5 °F (146 ± 3 °C) for unmodified binder; 305 ± 5 °F (152 ± 3 °C) for modified binder.

Illinois Modified Test Procedure
Effective Date: May 1, 2007
Revised Date: February 1, 2014

Standard Method
for
Preparing and Determining the Density of Hot-Mix Asphalt (HMA) Specimens by Means of the SHRP Gyratory Compactor
(continued)
Reference AASHTO T 312-12

AASHTO Section	***Illinois Modification***
8.2.3	Replace with the following: Reduce the sample according to Illinois Test Procedure 248 and the following: Place the splitter on a level surface. The splitter and accessory equipment may be heated, not to exceed 110°C (230°F), as determined by a noncontact temperature device. Surfaces of the mechanical splitter that will come in contact with the HMA may be lightly coated with an approved asphalt release agent to prevent a buildup and loss of asphalt binder and fines. The release agent shall not contain any solvents or petroleum-based products that could affect asphalt binder properties.
8.2.5	Revise with the following: Bring the HMA to the compaction temperature range by careful, uniform heating in an oven set at the specified compaction temperature immediately prior to molding.
9.2	Revise the first sentence as follows: Place the mixture into the mold in one lift using the mold-loading chute.
9.5	Revise as follows: Apply a 1.16 ± 0.02° (20.2 ± 0.35 mrad) average internal angle to the mold assembly and begin the gyratory compaction.
A1.2 New Section	Each district shall own and operate an Internal Bore Gauge. A Three-Point gauge is recommended although a Two-Point gauge is allowed. Care must be exercised during operation to ensure accuracy and precision regardless which gauge is selected.
A2.1	Replace with the following: Internal Bore Gauge – Minimum resolution shall be 0.0025 mm (0.0001 in).
A3.2	Replace with the following: *Standardize the bore gauge* – The bore gauge shall be standardized with the master ring prior to each use.

Standard Method
for
Preparing and Determining the Density of Hot-Mix Asphalt (HMA) Specimens by Means of the SHRP Gyratory Compactor
(continued)
Reference AASHTO T 312-12

AASHTO Section	***Illinois Modification***
A3.2.2	Replace the fifth sentence with the following: When using the three-point gauge, while extending the gauge contacts, use a small circular motion at the top of the gauge to align the contact tips with the master ring bore.
A3.2.2	Add the following at the end: Do not use the small circular motion when using a two-point gauge. Instead, position the two probes in the calibration ring so that they are horizontal. Then, while remaining horizontal, slightly move one of the probes from side to side to ensure that the maximum inside diameter is measured.
Figure A3.1 Heading	Replace with the following: Techniques for using the Two-Point Gauge (left) and Three-Point Bore Gauge (left and right) with the Calibrated Master Ring
Note A3	Replace with the following: The circular motion depicted in Figure A3.1, applied to the top of the three-point gauge while tightening the contact tips against the bore surface, is necessary to eliminate errors from misalignment.
A3.4	Replace from the third sentence of the second paragraph to the end of the section with the following: At each elevation, measurements designated as “A” shall have one of the gauge contacts aligned with the mark made in A3.3, measurements designated as “B” shall have the contact rotated from the mark 90 degrees for a Three-Point gauge or 120 degrees for a Two-Point gauge, and measurements designated as “C” shall have the contact rotated from the mark 180 degrees for a Three-Point gauge or 240 degrees for a Two-Point gauge. For best accuracy and consistency, each bore measurement should use the same firmness and technique applied in Section A3.2.2 for gauge standardization.
A3.4.1	Replace the first sentence with the following: Position the bore gauge at the first measurement elevation with one of the contact points aligned with the mark made in Section A3.3.

Illinois Modified Test Procedure
Effective Date: May 1, 2007
Revised Date: February 1, 2014

Standard Method
for
Preparing and Determining the Density of Hot-Mix Asphalt (HMA) Specimens by Means of the SHRP Gyratory Compactor
(continued)
Reference AASHTO T 312-12

AASHTO Section	***Illinois Modification***
A3.4.2	Replace the first sentence with the following: Release the gauge; rotate it 90 degrees (Three-Point gauge) or 120 degrees (Two-Point gauge) and obtain the measurement in this orientation.
A3.4.3	Replace the first sentence with the following: Release the gauge and for a Three-Point gauge rotate it an additional 90 degrees (180 degrees from "1A") or for a Two-Point gauge rotate it an additional 120 degrees (240 degrees from "1A") and obtain a third measurement at the same elevation.
A3.4.3 Note A4	Replace the first sentence with the following: Figure A3.2 shows the Three-Point gauge in the mold positioned for each measurement.
A3.4.4	Replace the second sentence with, "Repeat Section A3.4 through A3.4.3 for Elevations 2 and 3."

This Page Reserved

Illinois Modified Test Procedure
Effective Date: February 1, 2014

Standard Method of testing
For
Water Content of Freshly Mixed Concrete Using Microwave Oven Drying

Reference AASHTO T 318-02 (2011)

AASHTO Section	***Illinois Modification***
2.1	Revise as follows: AASHTO M 231 Weighing Devices Used in the Testing of Materials Illinois Test Procedure 84 Illinois Test Procedure 85 AASHTO T 121 (Illinois Modified) AASHTO R 60 (Illinois Modified) AASHTO T 255 (Illinois Modified) To maintain brevity in the text, the following will apply: **Example**: AASHTO T 121 (Illinois Modified) will be designated as "T 121." All references to "AASHTO T 84" or "T 84" shall be understood to refer to Illinois Test Procedure 84.
2.2	Add as follows: ASTM E 29 (Illinois Modified) Standard Practice for Using Significant Digits In Test Data to Determine Conformance with Specifications To maintain brevity in the text, the following will apply: **Example**: ASTM E 29 (Illinois Modified) will be designated as "ASTM E 29."
3.1	Replace as follows: A test specimen of freshly mixed concrete is dried in a microwave oven using a minimum of three intervals. The water content of the test specimen is calculated based on loss in mass of the test specimen at completion of the test. Total drying time is usually less than 20 minutes.
5.1	Revise as follows: Delete the phrase: "a turntable".
5.2	Replace as follows: Ceramic Tray – A 1.89 liter (2 quart) ceramic tray with a glass lid.
5.5, 6.1, 9.1,& 9.2	Delete these sections
9.3	Replace as follows: Determine the mass of the tray, and glass lid together (WS). Make this mass determination, and all subsequent mass determinations to the nearest 0.1 gram.

Standard Method of testing
For
Water Content of Freshly Mixed Concrete Using Microwave Oven Drying

(continued)
Reference AASHTO T 318-02 (2011)

AASHTO Section	***Illinois Modification***
9.4	Replace as follows: Leave the tray and glass lid on the balance. Record the tare weight. Place the 1500 ± 100 gram test specimen in the ceramic tray, and cover with the glass lid.
9.5	Replace as follows: Determine the mass of the tray, glass lid, and freshly mixed concrete test specimen together (WF).
9.6	Replace as follows: Place the covered tray, with the test specimen, in the microwave oven. Dry the test specimen for a period of 5.0 ± 0.5 minutes, at the 900 W power setting.
9.7	Replace as follows: At the end of the first drying period, remove the tray, glass lid, and test specimen from the microwave oven. Take off the glass lid, and be careful of the hot steam. Wipe off the moisture on the glass lid, with an absorbent cloth. With the edge of the scraper, break the mass of concrete until the coarse aggregate is separated from the mortar.
9.8	Replace as follows: Place the covered tray, with the test specimen, in the microwave oven, and dry it for 5.0 ± 0.5 minutes at the 900 W power setting.
9.9	Replace as follows: At the end of the second drying period, remove the tray, glass lid, and test specimen from the microwave oven. Take off the glass lid, and be careful of the hot steam. Wipe off the moisture on the glass lid, with an absorbent cloth. Stir the test specimen with the scraper, and determine the mass of the tray, glass lid, and specimen together.
9.10	Replace as follows: Place the covered tray, with the test specimen, in the microwave oven, and dry it for 2.0 ± 0.5 minutes at the 900 W power setting.

Standard Method of testing
For
Water Content of Freshly Mixed Concrete Using Microwave Oven Drying

(continued)
Reference AASHTO T 318-02 (2011)

AASHTO Section	***Illinois Modification***
9.11	Replace as follows: Remove the tray, glass lid, and test specimen from the microwave oven. Take off the glass lid, and wipe off any moisture on the lid. Determine the mass of the tray, glass lid, and specimen together. If the change in mass is 1 g or more, repeat the 2 minute drying period until the change in mass is less than 1 g. Record the mass of the tray, glass lid, and dry test specimen together (WD).
10.1	Revise as follows: Replace “cloth” with “glass lid.”
10.3 New Section	Water/Cement Ratio – Calculate the water cement ratio as follows: $$WCR = \frac{WT - \{[FA \times ({}^{FAA}/_{100})] + [CA \times ({}^{CAA}/_{100})]\}}{C}$$ Where: WCR = Water/Cement Ration. WT = Total water content, kg/m³ (lb/yd³). FA = Fine aggregate [oven dry mass (weight)/volume], kg/m³ (lb/yd³), calculated from batch ticket or from mix design. CA = Coarse aggregate [oven dry mass (weight)/volume], kg/m³ (lb/yd³), calculated from batch ticket or from mix design. FAA = Fine aggregate absorption, percent. CAA = Coarse aggregate absorption, percent. C = Cement plus cementitious material, kg/m³ (lb/yd³), Calculated from batch ticket or from mix design. Note: The definition for water/cement ratio shall be according to the Standard Specifications for Road and Bridge Construction.

Standard Method of testing
For
Water Content of Freshly Mixed Concrete Using Microwave Oven Drying

(continued)
Reference AASHTO T 318-02 (2011)

AASHTO Section	***Illinois Modification***
10.3 New Section (cont.)	Procedure to Determine FA and CA from Batch Ticket: <u>Example For FA</u> Batch Size, From Ticket (A) = 6 m³ Total Mass of Fine Aggregate Batched, From Ticket (B) = 4,390 kg Fine Aggregate Total (free and absorbed) Moisture Content (C) = 5.4% $FA = \frac{B/A}{1+(C/100)} = \frac{4{,}390 kg/6m^3}{1+(5.4/100)} = 694\, kg/m^3$ <u>Example for CA</u> Batch Size, From Ticket (A) = 6 m³ Total Mass of Coarse Aggregate Batched, From Ticket (B) = 6,985 kg Coarse Aggregate Total (free and absorbed) Moisture Content (C) = 2.9% $CA = \frac{B/A}{1+(C/100)} = \frac{6{,}985 kg/6m^3}{1+(2.9/100)} = 1{,}131\, kg/m^3$
	Procedure to Determine FA and CA from Mix Design: <u>Example For FA</u> Saturated Surface-Dry Mass per Volume for Fine Aggregate (A) = 673 kg/m³ Fine Aggregate Absorption (B) = 1.5% $FA = \frac{A}{1+(B/100)} = \frac{673\, kg/m^3}{1+(1.5/100)} = 663\, kg/m^3$ <u>Example For CA</u> Saturated Surface-Dry Mass per Volume for Coarse Aggregate (A) = 1,140 kg/m³ Coarse Aggregate Absorption (B) = 1.2 % $CA = \frac{A}{1+(B/100)} = \frac{1{,}140\, kg/m^3}{1+(1.2/100)} = 1{,}126\, kg/m^3$

Standard Method of testing
For
Water Content of Freshly Mixed Concrete Using Microwave Oven Drying

(continued)
Reference AASHTO T 318-02 (2011)

AASHTO Section	***Illinois Modification***
10.4 New Section	All Rounding shall be according to ASTM E 29.
11.1.3	Replace as follows: Total water content, nearest 1 kg/m³ (1 lb/yd³).
11.1.4 New Section	Water/cement ratio, nearest 0.01.

This Page Reserved

Illinois Modified Test Procedure
Effective Date: June 1, 2012
Revised Date: February 1, 2014

Standard Method of Test
for
Hamburg Wheel-Track Testing of Compacted Hot Mix Asphalt (HMA)

Reference AASHTO T 324-11

AASHTO Section	***Illinois Modification***
1.2	Revise the last sentence as follows: Alternatively, field cores with a diameter of 150 mm (5.91 in.), 255 mm (10 in.), 300 mm (12 in.), or saw-cut slab specimens may be tested.
2.1	Revise the individual AASHTO Standards with the appropriate Illinois modified AASHTO Standards: ▪ R 30, Mixture Conditioning of Hot Mix Asphalt (HMA) ▪ T 166, Bulk Specific Gravity of Compacted Hot Mix Asphalt (HMA) Using Saturated Surface-Dry Specimens ▪ T 209, Theoretical Maximum Specific Gravity and Density of Hot Mix Asphalt (HMA) ▪ T 312, Preparing and Determining the Density of Hot Mix Asphalt (HMA) Specimens by Means of the Superpave Gyratory Compactor
4.2	Revise the last sentence as follows: An abrupt increase in the rate of deformation may coincide with stripping of the asphalt binder from the aggregate in the HMA specimen.
6.1	Replace Section 6.1 with the following: *Number of Test Specimens* – A single slab specimen, two 150 mm (5.91 in.) diameter gyratory compacted specimens, or field cores according to Section 6.4 will be tested under each wheel in the Hamburg Wheel Tester. A test is currently defined as HMA specimens being tested using two wheels. However, if the District has sufficient experience with how their mixtures perform in the Hamburg Wheel Tester, a test may be conducted using a single wheel, at the discretion of the District.
6.2.2	Replace with the following: The mixing temperature shall be according to IL Modified AASHTO T 312.
6.2.4	Replace with the following: Laboratory mixed test samples shall be conditioned at the appropriate compaction temperature according to the short-term conditioning procedure in IL Modified AASHTO R 30.
6.2.5	Replace with the following: The compaction temperature shall be according to IL Modified AASHTO T 312.

Standard Method of Test
for
Hamburg Wheel-Track Testing of Compacted Hot Mix Asphalt (HMA)
(continued)
Reference AASHTO T 324-11

AASHTO Section	***Illinois Modification***
6.2.6.2	Replace with the following: *Compacting SGC Cylindrical Specimens*--Material shall be compacted into specimens using an SGC according to T 312. A specimen thickness of 62±2 mm (2.4±0.1 in.) shall be used. The specimen thickness shall be at least twice the nominal maximum aggregate size. Two 150 mm (5.91 in.) diameter specimens are needed for each wheel. Compacted specimens shall be cooled at room temperature on a clean, flat surface until the specimen is cool to the touch. If compaction of a 62±2 mm specimen requires more than the design number of gyrations for that particular mix design, then a single specimen with a height larger than 62 mm, which can be compacted within the approximate design number of gyrations, may be fabricated. The top 62±2 mm shall be cut away using a wet-saw, kept, and tested, keeping the cut face down. The air voids of the top 62 mm shall meet the tolerance specified in Section 7.3. Discard the bottom material cut from the specimen.
6.3.2.2	Replace with the following: *Compacting SGC Cylindrical Specimens*—Material shall be compacted into specimens using an SGC according to T 312. A specimen thickness of 62±2 mm (2.4±0.1 in.) shall be used. The specimen thickness shall be at least twice the nominal maximum aggregate size. Compacted specimens shall be cooled at room temperature on a clean, flat surface until the specimen is cool to the touch. Two 150 mm (5.91 in.) diameter specimens are needed for each wheel. If compaction of a 62±2 mm specimen requires more than the design number of gyrations for that particular mix design, then a single specimen with a height larger than 62 mm, which can be compacted within the approximate design number of gyrations, may be fabricated. The top 62±2 mm shall be cut away using a wet-saw, kept, and tested, keeping the cut face down. The air voids of the top 62 mm shall meet the tolerance specified in Section 7.3. Discard the bottom material cut from the specimen.
6.4.1	Replace sentence one with the following: *Cutting Field Cores or Field Slab Specimens*--Field cores or field slab specimens may be taken from compacted HMA pavements. Replace sentence five with the following: The height of a field core specimen may need to be adjusted to fit the specimen mounting system.

Illinois Modified Test Procedure
Effective Date: June 1, 2012
Revised Date: February 1, 2014

Standard Method of Test
for
Hamburg Wheel-Track Testing of Compacted Hot Mix Asphalt (HMA)
(continued)
Reference AASHTO T 324-11

AASHTO Section	***Illinois Modification***
Note 1	Replace the second sentence with the following: In order for the total sample height to be 62±2 mm (2.4±0.1 in.), the sample must be trimmed with a wet saw if it is too tall. If the sample is too short then it must be shimmed up with Plaster of Paris (or equivalent).
6.4.2	Delete the first sentence referring to minimum time after compaction.
7.3	Replace the second sentence with the following: For laboratory-compacted specimens, the target air void content shall be 6.0±1.0 percent for SMA mixes and 7.0±1.0 percent for all other mixes.
8.6.1	Replace with the following: *Test Temperature*-The test temperature shall be 50±1°C (122±1.8°F).
8.6.1.1	Add the following: *Selecting the Number of Wheel Passes*-The minimum number of wheel passes at the 0.5 in. (12.5 mm) rut depth criteria shall be selected based upon the PG Grade high temperature of the asphalt binder as specified in the mix requirements table of the plans. • PG 58-xx or lower 5,000 wheel passes • PG 64-xx 7,500 wheel passes • PG 70-xx 15,000 wheel passes • PG 76-xx or higher 20,000 wheel passes It may be useful to run every test for 20,000 wheel passes to collect additional data on moisture sensitivity.
8.6.2	Replace with the following: *Maximum Rut Depth*-The maximum allowable rut depth shall be less than or equal to 12.5 mm (0.5 in.).
8.7	Replace the second sentence with the following: Proceed to section 8.9 to operate the testing device in “Manual” mode.

Illinois Modified Test Procedure
Effective Date: June 1, 2012
Revised Date: February 1, 2014

Standard Method of Test
for
Hamburg Wheel-Track Testing of Compacted Hot Mix Asphalt (HMA)
(continued)
Reference AASHTO T 324-11

AASHTO Section	***Illinois Modification***
8.8.4	Replace with the following: Each wheel on the wheel-tracking device shall shut off independent of the other wheel. The end of a test for each wheel can occur when the specified number of wheel passes listed in Section 8.6.1.1 or the number of passes otherwise specified has occurred on that wheel. Further, each wheel on the device shall be set to lift independently when the LVDT displacement is 14.0 mm (0.55 in.) for that wheel. The HWTD measures the rut depth at multiple points per pass across the specimen. The maximum rut depth is defined as the average rut depth of the point with the deepest rut depth and the rut depth of the two points physically closest to it. The testing device software automatically saves the test data file for each wheel.
8.8.4.1 New Section	Add the following: If the test was conducted using two wheels, a passing test requires both wheels to have a rut depth less than or equal to 12.5 mm at the prescribed number of passes in section 8.6.1.1. The test result is reported as the average of the two rut depths. A test is considered as failing if one or both rut depths exceed 12.5 mm at, or less than, the prescribed number of passes in section 8.6.1.1. If the test was conducted using a single wheel, a passing test from that wheel shall have a rut depth less than or equal to 12.5 mm at the prescribed number of passes in section 8.6.1.1.

Illinois Modified Test Procedure
Effective Date: March 1, 2013

Standard Method of Test
for
Estimating the Strength of Concrete in Transportation Construction by Maturity Tests

Reference AASHTO T 325-04 (2011)

AASHTO Section	***Illinois Modification***
2.1	Add as follows: AASHTO T 22 (Illinois Modified) AASHTO T 23 (Illinois Modified) AASHTO T 177 (Illinois Modified) To maintain brevity in the text, the following will apply: **Example:** AASHTO T 22 (Illinois Modified) will be designated as "T 22."
2.2	Add as follows: ASTM C 1074 (Illinois Modified) To maintain brevity in the text, the following will apply: **Example:** ASTM C 1074 (Illinois Modified) will be designated as "ASTM C 1074."
4.1	Replace as follows: This standard can be used to estimate the in-place strength of concrete pavement patches and bridge deck patches. These estimates provide guidance useful in making decisions concerning opening to traffic.
5.1.2	Revise as follows: Temperature sensors suitable for embedment within ±0.5 in. (±15 mm) of mid-depth and in the center of a concrete strength test specimen. Also required shall be a device suitable for monitoring and recording the temperature.
Section 7.	Replace the section with the following: *Pavement Patching or Bridge Deck Patching*— A lot shall be 167 m^2 (200 yd^2), and one probe/sensor shall be installed in the last poured patch of a lot.
9.1	Revise as follows: Verify the calibration of systems used for monitoring the maturity of concrete per the manufacturer's recommendation, but no longer than 10 calendar days when in use.
9.2 New Section	*Validation of Strength-Maturity Relationship*—The strength-maturity relationship determined in Section 10.1 shall be validated monthly. Immediate validation of shall be required when 1) material sources change, 2) mix proportions change by more than ±5 percent, 3) admixture dosage(s) change by more than ±20 percent, 4) concrete temperature changes by more than ± 2 °C (±3 °F), 5) water-cement ratio changes by more than ±0.02, 4) batching and/or mixing procedure changes, and 6) significant equipment changes as determined by the Engineer.

Standard Method of Test
for
Estimating the Strength of Concrete in Transportation Construction by Maturity Tests
(continued)
Reference AASHTO T 325-04 (2011)

AASHTO Section	***Illinois Modification***
9.2 New Section continued	Validation of the strength-maturity relationship shall be according to the following: • A minimum of 2 strength test specimens and 1 test specimen for the probe/sensor shall be molded and cured according to T 23, except that specimens shall be cured for the first 24 hours in the same temperature conditions experienced in the field. Specimens shall be protected from disturbance, direct sunlight, and wind. • Once the desired maturity index is achieved, perform 2 strength tests according to T 22 or T 177. • Compare the average strength of the test specimens to that predicted by the strength-maturity relationship. If the average strength is within ±10 percent or ±200 psi (±1380 kPa) compressive or ±50 psi (±550 kPa) flexural, whichever is smaller, of the predicted strength, the strength-maturity relationship shall be considered validated. • The Engineer reserves the right to verify the Contractor's strength tests. If the difference between the Engineer's and the Contractor's split sample strength test results does exceeds 6200 kPa (900 psi) compressive strength or 620 kPa (90 psi) flexural strength, the Contractor's test will be considered invalid, which will invalidate the strength-maturity relationship. • Strength specimens (beams or cylinders) shall be used during the interim if the maturity relationship is invalid and has to be re-established.
10.1	Add as follows: The Arrhenius function shall be used, and the Contractor shall provide a current copy of ASTM C 1074 to the Engineer if requested. Delete Note 6.
10.2.2	Replace as follows: For pavement patching or bridge deck patching, place the probe/sensor 0.5 m (1.5 ft) from the edge of the repair and within ±0.5 in. (±15 mm) of mid-depth.

Illinois Modified Specification
Effective Date: March 1, 2007
Revised Date: February 1, 2014

Standard Specification
for
Superpave Volumetric Mix Design

Reference AASHTO M 323-04

AASHTO Section	***Illinois Modification***
All Sections	Replace all references to AASHTO Standards with the appropriate Illinois Modified AASHTO Standard, except as noted below.
2.1	Delete reference to AASHTO T 176 and AASHTO T 304. Replace AASHTO Standards T 11 and T 27, and ASTM Standards D 4791 and D 5821 with the following: • Illinois Test Procedure 11 • Illinois Test Procedure 27 • Illinois Test Procedure 4791 • Illinois Test Procedure 5821
2.2	Delete.
3.6	Replace with the following: Dust to Binder Ratio ($P_{0.075}$ / P_b)—By mass, the ratio between percent of aggregate passing the 75-µm (No. 200) sieve ($P_{0.075}$) and total asphalt content (P_b).
5.1	Replace with the following: The asphalt binder will be specified in the plans of each contract.
5.1.1	Delete
5.1.2	Delete
5.1.3	Delete
5.2	Delete
Table 1 and all footnotes	Delete

Standard Method of Test
for
Superpave Volumetric Mix Design
(continued)
Reference AASHTO M 323-04

AASHTO Section	***Illinois Modification***
5.3	Replace with the following: If RAP or RAP and recycled asphalt shingles (RAS) is to be used in the mixture, AND if the RAP / RAS Asphalt Binder Replacement (ABR) exceeds 20 percent, the high and low virgin asphalt binder grades shall each be reduced by one grade (i.e. 25 percent ABR would require that a virgin asphalt binder grade of PG64-22 be reduced to a PG58-28).
Table 2	Delete
6.1.1	Replace with the following: Nominal Maximum Size—The combined aggregate shall have a nominal maximum aggregate size of 4.75 to 9.5 mm for level binder, 9.5 to 12.5 mm for surface course HMA and less than or equal to 25.0 mm for subsurface (base and binder) course HMA.
6.1.1 Note 6	Delete
6.1.2	Replace with the following: Mixture gradations shall be as specified in Article 1030.04(a) of the Illinois Department of Transportation Standard Specifications for Road and Bridge Construction.
6.1.2.1 New Section	Insert the following: Gradation Restricted Zones – It is recommended that the selected combined aggregate gradation does not pass through the restricted zone boundaries specified in Table 3.
New Table 3	Insert new Table 3 (below)

Table 3 –Restricted Zone Boundary

Sieve, (mm)	**Nominal Size**									
	37.5 mm		**25 mm**		**19 mm**		**12.5 mm**		**9.5 mm**	
	min	**max**	**min**	**max**	**min**	**max**	**min**	**max**	**min**	**max**
4.75	34.7	34.7	39.5	39.5						
2.36	23.3	27.3	26.8	30.8	34.6	34.6	39.1	39.1	47.2	47.2
1.18	15.5	21.5	18.1	24.1	22.3	28.3	25.6	31.6	31.6	37.6
0.600	11.7	15.7	13.6	17.6	16.7	20.7	19.1	23.1	23.5	27.5
0.300	10	10	11.4	11.4	13.7	13.7	15.5	15.5	18.7	18.7

Illinois Modified Specification
Effective Date: March 1, 2007
Revised Date: February 1, 2014

Standard Specification
for
Superpave Volumetric Mix Design
(continued)
Reference AASHTO M 323-04

AASHTO Section	***Illinois Modification***
Figure 1	Delete.
6.2	Delete.
6.3	Delete.
6.4	Delete.
6.5	Delete.
6.6	Replace with the following: When RAP is used in the mixture, the RAP aggregate shall be extracted from the RAP using a solvent extraction (T 164) or ignition oven (T 308) as specified by the agency. The RAP aggregate shall be included in determination of gradation.
Table 5	Delete
6.6 Note 7	Delete
7.2	Replace with the following: The HMA design, when compacted in accordance with T-312, shall meet the VMA and VFA and air void requirements specified in Article 1030.04(b) of the Illinois Department of Transportation Standard Specifications for Road and Bridge Construction.
Table 6	Delete

Illinois Modified Specification
Effective Date: March 1, 2007
Revised Date: February 1, 2014

Standard Specification
for
Superpave Volumetric Mix Design
(continued)
Reference AASHTO M 323-04

AASHTO Section	***Illinois Modification***
7.2.2 New Section	Insert the following: Dust to Binder Ratio: The ratio of material passing the 75µm (#200) sieve to total asphalt binder shall be as specified in Article 1030.04(a) of the Illinois Department of Transportation Standard Specifications for Road and Bridge Construction.
7.2 NOTE 8	Delete
7.3	Replace with the following" The HMA design, when compacted according to T 312 at 7.0 ± 0.5 percent air voids and tested in accordance with T 283 shall have a minimum tensile strength ratio of 0.85.
Appendix A	Delete

Illinois Modified Test Procedure
Effective Date: January 1, 2002
Revised Date: February 1, 2014

Standard Specification
for
Stone Matrix Asphalt (SMA)

Reference AASHTO M325-08

AASHTO Section	***Illinois Modification***
Whole Document	This AASHTO Provisional document shall only be used in conjunction with a Special Provision that includes Illinois' SMA mix design and ingredient materials details.
2.1	Revise reference to the individual standards as follows: M 323 (Illinois Modified) R 46 (Illinois Modified) Illinois Test Procedure 85 T 283 (Illinois Modified) T 305 (Illinois Modified) T 312 (Illinois Modified) Illinois Test Procedure 4791 Illinois Test Procedure 5821
8.1	Replace with the following after the second sentence: Cellulose shall conform to the properties outlined in Table 3. For mineral fibers, the dosage rate shall be approximately 0.4 percent by total mixture mass and sufficient to prevent draindown. Mineral fibers shall conform to the properties outlined in Table 4. The maximum draindown will be 0.3 percent by weight of the mix when held at the plant temperature for one hour.
Table 4	Revise the TSR requirement to be 0.85 min.
9.3	Replace with: The tensile strength ratio (TSR) of the SMA shall be at least 0.85, at 6.0 ± 0.5 percent air voids, when tested in accordance with T 283.

Illinois Modified Test Procedure
Effective Date: January 1, 2002
Revised Date: February 1, 2014

Standard Specification
for
Stone Matrix Asphalt (SMA)

Reference AASHTO M325-08

AASHTO Section	***Illinois Modification***
8.1	Insert after Note 3:

Table 3 – Cellulose Fiber Quality Requirements

Property	Requirement
Sieve Analysis	
Method A – Alpine Sieve[a] Analysis:	
Fiber Length	6 mm (0.25 in) maximum
Passing 0.150-mm (No. 100) sieve	70 ± 10 percent
Method B – Mesh Screen[b] Analysis:	
Fiber Length	6 mm (0.25 in) maximum
Passing 0.850-mm (No. 20) sieve	85 ± 10 percent
0.425-mm (No. 40) sieve	65 ± 10 percent
0.106-mm (No. 140) sieve	30 ± 10 percent
Ash Content[c]	18 ± 5 percent non-volatiles
pH[d]	7.5 ± 1.0
Oil Absorption[e]	5.0 ± 1.0 (times fiber mass)
Moisture Content[f]	Less than 5 percent (by mass)

a	This test is performed using an Alpine Air-Jet Sieve (Type 200 LS). A representative 5-g sample of fiber is sieved for 14 minutes at a controlled vacuum of 75 kPa (11 psi) of water. The portion remaining on the screen is weighed.
b	This test is performed using standard 0.850-mm (No. 20), 0.425-mm (No. 40), 0.250-mm (No. 60), 0.180-mm (No. 80), 0.150-mm (No. 100), and 0.106-mm (No. 140) sieves, nylon brushes, and a shaker. A representative 10-g sample of fiber is sieved, using a shaker and two nylon brushes on each screen. The amount retained on each sieve is weighed and the percentage passing calculated. Repeatability on this method is suspect and needs to be verified.
c	A representative 2- to 3-g sample of fiber is placed in a tared crucible and heated to between 595 and 650°C (1100 and 1200°F) for not less than two hours. The crucible and ash are cooled in a desiccator and weighed.
d	Five grams of fiber are added to 100 mL of distilled water, stirred and allowed to sit for 30 minutes. The pH is determined with a probe calibrated with a pH buffer of 7.0.
e	Five grams of fiber are accurately weighed and suspended in an excess of mineral spirits for not less than 5 minutes to ensure total saturation. It is then placed in a screen mesh strainer (approximately 0.5mm^2 opening size) and shaken on a wrist action shaker for 10 minutes (approximately 32-mm (I ¼-in.) motion at 240 shakes per minute). The shaken mass is then transferred without touching to a tared container and weighed. Results are reported as the amount (number of times its own weight) the fibers are able to absorb.
f	Ten grams of fiber are weighed and placed in a 121°C (250°F) forced-air oven for two hours. The sample is then reweighed immediately upon removal from the oven.

Illinois Modified Test Procedure
Effective Date: January 1, 2002
Revised Date: February 1, 2014

Standard Specification
for
Stone Matrix Asphalt (SMA)

Reference AASHTO M325-08

<table>
<tr><th>AASHTO Section</th><th>Illinois Modification</th></tr>
<tr><td>8.1</td><td>Insert at end:

Table 4 – Mineral Fiber Quality Requirements
<table>
<tr><th colspan="2">Property</th><th>Requirement</th></tr>
<tr><td colspan="2">Size Analysis:</td><td></td></tr>
<tr><td></td><td>Fiber Length[a]</td><td>6 mm (0.25 in) maximum mean test value</td></tr>
<tr><td></td><td>Thickness[b]</td><td>0.005 mm (0.0002 in.) maximum mean test value</td></tr>
<tr><td colspan="2">Shot Content [c]</td><td></td></tr>
<tr><td></td><td>Passing 0.250-mm (No. 60) sieve</td><td>90 ± 5 percent</td></tr>
<tr><td></td><td>Passing 0.063-mm (No. 230) sieve</td><td>70 ± 10 percent</td></tr>
</table>
<table>
<tr><td>a</td><td>The fiber length is determined according to the Bauer McNett fractionation.</td></tr>
<tr><td>b</td><td>The fiber thickness, or diameter, is determined by measuring at least 200 fibers in a phase contrast microscope.</td></tr>
<tr><td>c</td><td>Shot content is a measure of non-fibrous material. The shot content is determined on vibrating sieves. Two sieves, the 0.250 mm (No. 60) and the 0.063 mm (No. 230), are typically utilized. For additional information, see C 612.</td></tr>
</table></td></tr>
<tr><td>9.1</td><td>Revise the first sentence to read:
The combined aggregates shall conform to the gradation requirements of Table 5.</td></tr>
<tr><td>Table 3</td><td>Revise title to read:
Table 5 – SMA Gradation Specification Bands</td></tr>
<tr><td>9.2</td><td>Revise to read:
The designed SMA mixture shall meet the requirements of Table 6.</td></tr>
<tr><td>Table 4</td><td>Revise title to read:
Table 6 – SMA Mixture Specifications for Superpave Gyratory Compactor</td></tr>
<tr><td>9.3</td><td>Revise to read:
The tensile strength ratio (TSR) of the SMA shall be at least 0.85, at 6.0 ± 1.0 percent air voids, when tested in accordance with T 283.</td></tr>
</table>

This Page Reserved

Illinois Modified Test Procedure
Effective Date: June 1, 2012

Standard Practice
for
Mixture Conditioning of Hot Mix Asphalt (HMA)

Reference AASHTO R 30-02 (2010)

AASHTO Section	***Illinois Modification***
1.1	Replace with the following: This standard practice describes procedures for mixture conditioning of uncompacted hot mix asphalt (HMA). Conditioning requirements for volumetric mixture design, specimens for Hamburg Wheel testing, and specimens for strength and TSR testing are addressed.
2.1	Revise the individual AASHTO Standards with the appropriate Illinois Modified AASHTO Standards:
2.1	Delete reference to PP 3 and T 316.
3.	Replace with the following: For mixture conditioning for volumetric mixture design, specimens for Hamburg Wheel testing, and specimens for strength and TSR testing, a mixture of aggregate and asphalt binder is conditioned in a forced-draft oven at the mixture's specified compaction temperature.
4.	Replace with the following: The properties and performance of HMA can be more accurately predicted by using conditioned test samples. The mixture conditioning for the volumetric mixture design procedure, for Hamburg Wheel test specimens and for specimens for strength and TSR testing is designed to allow for binder absorption.
7.1	Replace with the following: *Mixture Conditioning for Volumetric Mixture Design, for Hamburg Wheel Test Specimens, and for specimens for Strength and TSR Testing:*
7.1.1	Replace the first sentence with the following: The mixture conditioning for the volumetric mixture design procedure, for Hamburg Wheel test specimens, and for specimens for strength and TSR testing applies to laboratory-prepared, loose mixture only. No mixture conditioning is required when conducting quality control or quality assurance testing on plant-produced mixture, except as specified for warm mix asphalt (WMA) mixtures.

Illinois Modified Test Procedure
Effective Date: June 1, 2012

Standard Practice
for
Mixture Conditioning of Hot Mix Asphalt (HMA)

Reference AASHTO R 30-02 (2010)

AASHTO Section	***Illinois Modification***
7.1.1 Note 1	Delete
7.1.2	Replace with the following: Place the mixture in a pan and spread the mixture to an even thickness ranging between 1 in. (25 mm) and 2 in. (50 mm). The aging may take place either: a. Immediately after mixing but before compaction (without being cooled down), or b. After the mixture has been cooled down to room temperature. The mixture shall be placed in the oven, which has been pre-heated to compaction temperature, for the appropriate time specified below. For testing of all mixtures with low-absorptive aggregate, place the mixture and pan in the conditioning oven pre-heated to the mixture's specified compaction temperature ± 5 ˚F (± 3 ˚C) for 1 hr. ± 5 min. prior to compaction. (1 hr. of oven time, not the time the mixture was held at compaction temperature, is used.) For testing of all mixtures with high-absorptive aggregate, place the mixture and pan in the conditioning oven pre-heated to the mixture's specified compaction temperature ± 5 ˚F (± 3 ˚C) for 2 hrs. ± 5 min. prior to compaction. (2 hrs. of oven time, not the time the mixture was held at compaction temperature, is used.)
7.1.2 Note 2	Replace with the following: Note 2 – When modified asphalt is used, the required compaction temperature is 305 ± 5 ˚F (152 ± 3 ˚C).
7.1.2	Note 2A – High-absorptive aggregate mixture is defined as aggregate with a combined absorption greater than 2.5% and all slags.
7.1.2	Note 2B – The compaction temperature for unmodified asphalt is 295 ± 5 ˚F (146 ± 3 ˚C).

Illinois Modified Test Procedure
Effective Date: June 1, 2012

Standard Practice
for
Mixture Conditioning of Hot Mix Asphalt (HMA)

Reference AASHTO R 30-02 (2010)

<table>
<tr><th>AASHTO Section</th><th>Illinois Modification</th></tr>
<tr><td>7.1.2
New Note</td><td>Note 2C – Short-term conditioning is not permitted for testing plant-produced mixture, except as specified for WMA mixtures.</td></tr>
<tr><td>7.1.2
New Note</td><td>Note 2D – Condition Hamburg Wheel specimens from WMA mixtures from both lab-produced mix and plant-produced mix for two hours in addition to the requirements for HMA.</td></tr>
<tr><td>7.1.2.1
New Section</td><td>Add the following:
Table 1 summarizes the various requirements for short-term conditioning of both HMA and WMA from lab-produced mix and plant-produced mix.</td></tr>
<tr><td>7.1.2.1
New Table</td><td>Add the following:
Table 1
<table>
<tr><th colspan="7">Short Term Conditioning (hours) 1/</th></tr>
<tr><th></th><th colspan="3">Lab-Produced Mix</th><th colspan="3">Plant-Produced Mix</th></tr>
<tr><th></th><th>Volumetrics</th><th>T-283</th><th>Hamburg</th><th>Volumetrics</th><th>T-283</th><th>Hamburg</th></tr>
<tr><td>HMA</td><td>1 or 2</td><td>1 or 2</td><td>1 or 2</td><td>0</td><td>0</td><td>0</td></tr>
<tr><td>WMA</td><td>1 or 2</td><td>1 or 2</td><td>3 or 4</td><td>0</td><td>0</td><td>2</td></tr>
</table>
1/ When two different values are present within a single cell, the correct value is based on whether low or high absorptive aggregates are used.</td></tr>
<tr><td>7.1.4</td><td>Delete the first sentence.</td></tr>
<tr><td>7.2</td><td>Delete all sections</td></tr>
<tr><td>7.3</td><td>Delete all sections</td></tr>
<tr><td>8.3</td><td>Delete all sections</td></tr>
<tr><td>8.4</td><td>Delete all sections</td></tr>
<tr><td>9.1</td><td>Replace with the following:
Conditioning; hot mix asphalt</td></tr>
</table>

This Page Reserved

Illinois Modified Test Procedure
Effective Date: May 1, 2007
Revised Date: February 1, 2014

Standard Practice
for
Superpave Volumetric Design for Hot-Mix Asphalt (HMA)

Reference AASHTO R 35-04

AASHTO Section	***Illinois Modification***
ALL Sections	• All references to calculations involving N_{ini} and N_{max} do not apply at this time. • Replace all references to AASHTO or ASTM standards with the appropriate Illinois-modified specification or Illinois Test Procedure. • Replace all references to design air voids of 4.0% with the design air voids content specified in Illinois-modified M323.
3.9	Replace with the following: Dust-to-Binder Ratio ($P_{0.075}/P_b$)—By weight ratio between percent aggregate passing the 0.075-µm (No. 200) sieve ($P_{0.075}$) and total asphalt content (P_b).
4.1 Note 3	Delete Note 3
6.1	Delete
6.2	Delete
6.5 New Note	Note 5a: Oven dry the mix design aggregates according to T 245.
6.5 New Note	Note 5b: The aggregate sample from each stockpile shall be sieved and separated into the specific size passing each appropriate sieve according to the Department's Hot-Mix Asphalt Level III Technicians Manual.
6.6	Replace with the following: All aggregate specific gravity and absorption values used in mix design shall be obtained from the Department's Central Bureau of Materials aggregate specific gravity/absorption listing.
6.6 New Note	Note 5c: The trial aggregate blends may be prepared from unwashed aggregates. If the trial aggregate blends are prepared from unwashed aggregates, then a dust correction factor shall be determined and applied to the blend chosen for the mix design according to the Department's "HMA Mix Design Procedure for Dust Correction Factor Determination."
6.8	Replace with the following: Prepare a minimum of three trial aggregate blend gradations and confirm that each trial blend meets M 323 gradation controls.

Illinois Modified Test Procedure
Effective Date: May 1, 2007
Revised Date: February 1, 2014

Standard Practice
for
Superpave Volumetric Design for Hot-Mix Asphalt (HMA)

Reference AASHTO R 35-04

AASHTO Section	***Illinois Modification***
6.9	Delete
6.9 Note 6	Delete Note 6
Table 1 and all footnotes	Replace with new Table 1 (below)

Table 1 — N_{design} Table

Design ESALs (millions) Based on 20-year design	**N_{des}**	**Typical Roadway Application**
< 0.3	30	Roadways with very light traffic volume such as local roads, county roads, and city streets where truck traffic is prohibited or at a very minimal level (considered local in nature; not regional, intrastate, or interstate). Special purpose roadways serving recreational sites or areas may also be applicable.
0.3 to 3	50	Includes many collector roads or access streets. Medium-trafficked city streets and the majority of county roadways.
3 to 10	70	Includes many two-lane, multi-lane, divided, and partially or completely controlled access roadways. Among these are medium-to-highly trafficked streets, many state routes, U.S. highways, and some rural interstates.
10 to 30	90	May include the previous class of roadways which have a high amount of truck traffic.
> 30	105	Includes U.S. Interstates, both urban and rural in nature. Special applications such as truck-weighing stations or truck-climbing lanes on two-lane roadways may also be applicable to this level.

Illinois Modified Test Procedure
Effective Date: May 1, 2007
Revised Date: February 1, 2014

Standard Practice
for
Superpave Volumetric Design for Hot-Mix Asphalt (HMA)

Reference AASHTO R 35-04

AASHTO Section	***Illinois Modification***
8.1 New Note	Note 7a The design number of gyrations will be determined by the Department and specified in the plans.
8.3 Note 9	Delete
8.3 Note 10	Delete
9.3.6	Replace with the following: Calculate the dust-to-binder ratio for each trial blend where: $$\textit{Dust to binder ratio} = \frac{P_{0.075}}{P_b}$$ where: P_b = total asphalt content and $P_{0.075}$ = percent passing 0.075-µm sieve.
10.5.2	Replace with the following: Calculate the dust-to-binder ratio where: $$\textit{Dust to binder ratio} = \frac{P_{0.075}}{P_b}$$ where: P_b = total asphalt content and $P_{0.075}$ = percent passing 0.075-µm sieve.
11.3	Replace with the following: If the strength ratio is less than 85 percent, as required in M 323, remedial action, such as the use of anti-strip agents, is required to improve the moisture susceptibility of the mix. When remedial agents are used to modify the asphalt binder, the mixture shall be retested to assure compliance with the minimum 85 percent requirement.

This Page Reserved

Illinois Modified Test Procedure
Effective Date: February 1, 2014

Standard Method of Test
for
Making and Curing Concrete Test Specimens in the Laboratory

Reference AASHTO R 39-07 (2012)
(formerly T 126)

AASHTO Section	***Illinois Modification***
2.1	Revise as follows: AASHTO M 201 (Illinois Modified) AASHTO M 205 (Illinois Modified) AASHTO T 23 (Illinois Modified) Illinois Test Procedure 84 replaces T 84 Illinois Test Procedure 85 replaces T 85 AASHTO T 119 (Illinois Modified) AASHTO T 121 (Illinois Modified) AASHTO R 60 (Illinois Modified) AASHTO T 152 (Illinois Modified) AASHTO T 196 (Illinois Modified) AASHTO T 231 (Illinois Modified) Illinois Test Procedure 255 replaces T 255 AASHTO T 309 is replaced by ASTM C 1064/C 1064M (Illinois Modified). To maintain brevity in the text, the following will apply: **Example:** AASHTO T 23 (Illinois Modified) will be designated as “T 23.” All references to “AASHTO T 84” or “T 84” shall be understood to refer to Illinois Test Procedure 84.

This Page Reserved

Illinois Modified Test Procedure
Effective Date: January 1, 2002
Revised: February 1, 2014

Standard Practice
for
Designing Stone Matrix Asphalt (SMA)

Reference AASHTO R46-08

AASHTO Section	***Illinois Modification***
Whole Document	This AASHTO Provisional document shall only be used in conjunction with a Special Provision that includes Illinois' SMA mix design and ingredient materials details.
2.1	Revise reference to the individual standards as follows: M 325 (Illinois Modified) R 30 (Illinois Modified) Illinois Test Procedure 19 Illinois Test Procedure 27 Illinois Test Procedure 85 T 166 (Illinois Modified) T 209 (Illinois Modified) T 283 (Illinois Modified) T 305 (Illinois Modified) T 312 (Illinois Modified)
4.4	Replace with: *Evaluating Moisture Susceptibility* – The moisture susceptibility of the mixture, designed and compacted in accordance with T 312 to a V_a content of 6.0 ± 0.5 percent, is evaluated in accordance with T 283.
11.1	Revise to read: Moisture susceptibility of the selected mixture is determined in accordance with T 283 using samples compacted in accordance with T 312 to a V_a content of 6.0 ± 0.5 percent. The retained tensile strength level of the SMA shall be as specified in T 325 at 6.0 ± 0.5 percent V_a.

This Page Reserved

Illinois Modified Test Procedure
Effective Date: February 1, 2014

Standard Method of Test
For
Sampling Freshly Mixed Concrete

Reference AASHTO R 60-12
(formerly T 141)

AASHTO Section	***Illinois Modification***
5.2, 5.2.1, 5.2.2, 5.2.3, and 5.2.4	Replace as follows: **REPRESENTATIVE SAMPLE** Do not obtain the sample from the first 0.1 m^3 (4 ft^3), or from the last 0.1 m^3 (4 ft^3) of discharged concrete. **POINT OF SAMPLING** The field sample shall be obtained at or near the point of discharge by the delivery equipment and prior to incorporation of the concrete into the work, except when concrete is placed by pump or conveyor. When concrete is placed by pump or conveyor, the field sample for strength tests shall be obtained at the discharge end of the pump or conveyor. Per specifications, a slump test (or applicable self-consolidating concrete tests), air content test, and temperature test shall be performed on the same sample obtained for strength tests. Additional sampling prior to and following transport by pump or conveyor is specified to determine a correction factor for air content according to the Check Sheet for "Quality Control/Quality Assurance of Concrete Mixtures" or Construction Memorandum 13-74 "Guidelines for Pumping of Bridge Deck Concrete." **Note:** Field samples for strength test are taken at the discharge end of the pump or conveyor because air content is likely to change during transport. Typically, if air content increases 1 percent, compressive strength will decrease approximately 2 to 6 percent and flexural strength will decrease approximately 2 to 4 percent. These sampling and testing procedures are mandatory for bridge deck concrete transported by pump or conveyor. For some construction items, it may not be feasible or practical to obtain a field sample at the discharge end of the pump or conveyor. These samples may be obtained prior to pumping or conveying at the discretion of the Engineer. **SAMPLING FROM TRUCK MIXER, TRUCK AGITATOR, OR FRONT DISCHARGE CARRIER WHICH DEPOSIT CONCRETE WITH A CHUTE** 1. Collect the sample in a damp, non-absorbent container (a wheelbarrow or other large container).

Standard Method of Test
For
Sampling Freshly Mixed Concrete
(continued)
Reference AASHTO R 60-12
(formerly T 141)

AASHTO Section	***Illinois Modification***
5.2, 5.2.1, 5.2.2, 5.2.3, and 5.2.4	2. Repeatedly pass the sample container through the entire discharge stream, or completely divert the discharge stream in the sample container. 3. Protect the sample from contamination and if necessary, protect the sample from rapid evaporation by covering with a plastic sheet. 4. Transport the sample to the location of testing. 5. Remix the sample with a damp shovel. 6. Perform air content, slump, temperature, strength, and other tests as required. After completing a test, discard the concrete used. Never use any portion of the sample for more than one test. 7. Clean all test equipment with water and allow to drain, or wipe dry. Never assemble wet test equipment before storing. **SAMPLING FROM NONAGITATOR TRUCK OR OTHER DELIVERY EQUIPMENT WHICH DEPOSIT CONCRETE DIRECTLY ONTO GRADE** 1. Collect the sample in a damp, non-absorbent container (a wheelbarrow or other large container). 2. Use a damp shovel to obtain portions of the concrete from at least 5 locations of the pile, and composite into one test sample. 3. Be careful not to contaminate the sample by including underlying material. 4. Protect the sample from contamination and if necessary, protect the sample from rapid evaporation by covering with a plastic sheet. 5. Transport the sample to the location of testing. 6. Remix the sample with a damp shovel. 7. Perform air content, slump, temperature, strength, and other tests as required. After completing a test, discard the concrete used. Never use any portion of the sample for more than one test. 8. Clean all test equipment with water and allow to drain, or wipe dry. Never assemble wet test equipment before storing.

Standard Test Method for Sampling, Determining Yield and Air Content, and Making and Curing Strength Test Specimens of Self-Consolidating Concrete

I. SAMPLING OF FRESHLY MIXED CONCRETE

Sampling freshly mixed self-consolidating concrete (SCC) shall be performed according to Illinois Modified AASHTO R 60, except the elapsed time for obtaining the representative sample shall not exceed two minutes. The number of testing personnel shall be such that all tests shall start within five minutes of obtaining the representative sample.

II. YIELD AND AIR CONTENT OF FRESHLY MIXED CONCRETE

The yield test shall be according to Illinois Modified AASHTO T 121, except the measure shall be filled in one lift without vibration, rodding, or tapping. The air content test shall be according to Illinois Modified AASHTO T 152 or T 196, except the bowl shall be filled in one lift without vibration, rodding, or tapping.

III. MAKING AND CURING CONCRETE STRENGTH TEST SPECIMENS

Strength test specimens shall be made according to Illinois Modified AASHTO T 23 or R 39, except for the following:

a. The specimen molds shall be filled using a suitable container in one lift without vibration, rodding, or tapping.

b. Strike off the surface of the concrete level with the top of the mold using the strike-off bar or tamping rod.

c. The slump flow, VSI, air content, and temperature of each batch of concrete, from which specimens are made, shall be measured immediately after remixing.

This Page Reserved

Standard Test Method for Slump Flow and Stability of Self-Consolidating Concrete

Referenced Test Procedure(s):

1. Illinois Test Procedure SCC-1, Sampling, Determining Yield and Air Content, and Making and Curing Strength Test Specimens of Self-Consolidating Concrete

2. AASHTO T 119 (Illinois Modified), Slump of Hydraulic-Cement Concrete

3. ASTM E 29 (Illinois Modified), Standard Practice for Using Significant Digits in Test Data to Determine Conformance with Specifications

To maintain brevity in the text, the following will apply:
Example: Illinois Test Procedure SCC-1 will be designated as "Illinois Test SCC-1."
AASHTO T 119 (Illinois Modified) will be designated as "T 119."
ASTM E 29 (Illinois Modified) will be designated as "ASTM E 29."

1. GENERAL

This test method covers the determination of flowability and stability of fresh self-consolidating concrete (SCC). The average diameter of the slump flow is a measure of the filling ability (flowability) of SCC. The Visual Stability Index (VSI) is a measure of the dynamic segregation resistance (stability) of SCC.

All rounding shall be according to ASTM E 29.

2. EQUIPMENT

a. Mold and Tamping Rod – The mold and tamping rod shall conform to that described in T 119.

b. Strike-Off Bar – *Optional.* The strike-off bar shall be a flat straight bar at least 3 mm (0.125 in.) x 20 mm (0.75 in.) x 300 mm (12 in.).

c. Base Plate – The base plate shall be of a smooth, rigid, and nonabsorbent poly methyl methacrylate (e.g. Plexiglas®, Lucite®, etc.) or high-density overlay (HDO) plywood material, and be of sufficient dimensions to accommodate the maximum slump flow. *Optional*: Centered on the testing surface of the base plate shall be a marked circle of diameter 500 mm (20 in.).

d. Suitable container for filling inverted slump cone.

e. Measuring Tape – The measuring tape shall have a minimum gradation of 10 mm (0.5 in.).

f. Stopwatch – *Optional.* The stopwatch shall have a minimum reading of 0.2 seconds.

3. MATERIALS

The sample of SCC from which test specimens are made shall be obtained according to Section I of Illinois Test SCC-1.

4. PROCEDURE

a. Dampen the slump cone and base plate. Ensure excess water is removed from the testing surface as too much water may influence the Visual Stability Index (VSI) rating.

b. Place the base plate on level, stable ground. Center the mold on the base plate. The mold shall be placed inverted with the smaller diameter opening down.

c. Fill the mold in one lift without vibration, rodding, or tapping.

d. Strike off the surface of the concrete level with the top of the mold using the tamping rod or strike-off bar. Remove surplus concrete from around the base of the mold and base plate surface.

e. Raise the mold vertically a distance of 225 ± 75 mm (9 ± 3 in.) in 3 ± 1 seconds without any lateral or torsional motion. Complete the test procedure from the start of filling through removal of the mold without interruption and within an elapsed time of 2.5 minutes.

f. *Optional.* Measured from the time the mold is lifted, determine the time in seconds it takes for the concrete flow to reach a diameter of 500 mm (20 in.). This is the T_{50} time.

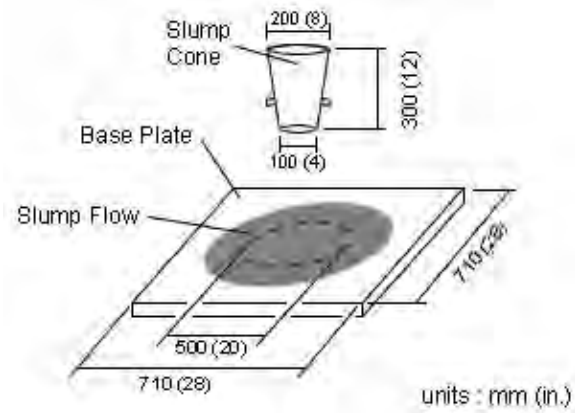

Figure 1. Slump Flow Test

g. When the concrete has stopped flowing, measure the maximum diameter of the resulting slump flow and measure the diameter perpendicular to the maximum. Each measurement shall be to the nearest 10 mm (0.5 in.). If the two measurements differ by more than 50 mm (2 in.), verify base plate to be level, and test again.

h. Calculate the average of the two measured diameters. This is the slump flow.

i. By visual examination, rate the Visual Stability Index (VSI) of the SCC using the criteria in Table 1 and illustrated in Figures 2 – 9.

TABLE 1 – VISUAL STABILITY INDEX (VSI)

VSI	CRITERIA
0 stable	No evidence of segregation or bleeding in slump flow, mixer drum/pan, or sampling receptacle (e.g. wheelbarrow).
1 stable	No mortar halo or coarse aggregate heaping in the slump flow, but some slight bleeding and/or air popping is evident on the surface of the slump flow, or concrete in the mixer drum/pan or sampling receptacle (e.g. wheelbarrow).
2 unstable	Slight mortar halo, ≤ 10 mm (0.5 in.) wide, and/or coarse aggregate heaping in the slump flow, and highly noticeable bleeding in the mixer drum/pan or sampling receptacle (e.g. wheelbarrow).
3 unstable	Clearly segregated by evidence of a large mortar halo, > 10 mm (0.5 in.), and/or large coarse aggregate pile in the slump flow, and a thick layer of paste on the surface of the concrete sample in the mixer drum or sampling receptacle (e.g. wheelbarrow).

5. REPORT

a. Report the slump flow (average of two measured diameters) to the nearest 5 mm (0.25 in.).

b. Report the VSI.

c. *Optional.* Report the T_{50} time to the nearest 0.2 second.

Figure 2. VSI = 0, stable

Figure 3. VSI = 0, stable

Figure 4. VSI = 1, stable

Figure 5. VSI = 1, stable

Figure 6. VSI = 2, unstable

Figure 7. VSI = 2, unstable

Figure 8. VSI = 3, unstable

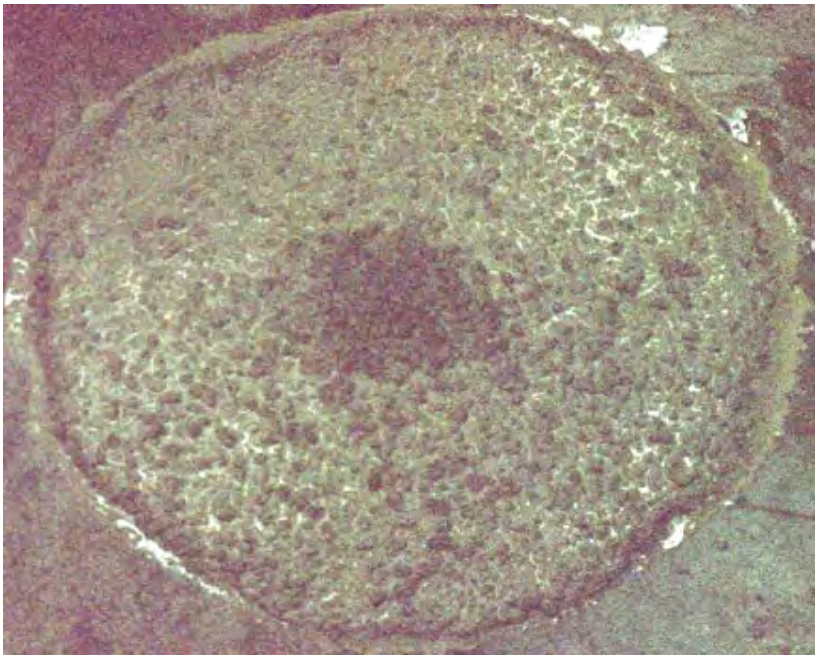

Figure 9. VSI = 3, unstable

Standard Test Method for Passing Ability of Self-Consolidating Concrete by J-Ring and Slump Cone

Referenced Test Procedure(s):

1. Illinois Test Procedure SCC-1, Sampling, Determining Yield and Air Content, and Making and Curing Strength Test Specimens of Self-Consolidating Concrete

2. Illinois Test Procedure SCC-2, Slump Flow and Stability of Self-Consolidating Concrete

3. AASHTO T 119 (Illinois Modified), Slump of Hydraulic-Cement Concrete

4. ASTM E 29 (Illinois Modified), Standard Practice for Using Significant Digits in Test Data to Determine Conformance with Specifications

To maintain brevity in the text, the following will apply:
Example: Illinois Test Procedure SCC-1 will be designated as "Illinois Test SCC-1."
AASHTO T 119 (Illinois Modified) will be designated as "T 119."
ASTM E 29 (Illinois Modified) will be designated as "ASTM E 29."

1. GENERAL

This test method covers the determination of the flowability and passing ability of self-consolidating concrete (SCC) using the J-Ring and Slump Cone. The diameter of the unobstructed slump flow versus the obstructed slump flow passing through the J-Ring is a measure of the passing ability of SCC.

All rounding shall be according to ASTM E 29.

2. EQUIPMENT

a. J-Ring – See Figure 1. The J-Ring shall consist of sixteen evenly spaced smooth steel rods of 16 mm (5/8 in.) diameter and 100 mm (4 in.) length.
b. Mold and Tamping Rod – The mold and tamping rod shall conform to that described in T 119.
c. Strike-Off Bar – *Optional.* The strike-off bar shall be a flat straight bar minimum 3 x 20 x 300 mm (0.125 x 0.75 x 12 in.).
d. Base Plate – The base plate shall be of a smooth, rigid, nonabsorbent poly methyl methacrylate (e.g. Plexiglas®, Lucite®, etc.) or high-density overlay (HDO) plywood material, and be of sufficient dimensions to accommodate the maximum slump flow.
e. Suitable container for filling inverted slump cone.
f. Measuring Tape – The measuring tape shall have a minimum gradation of 10 mm (0.5 in.).

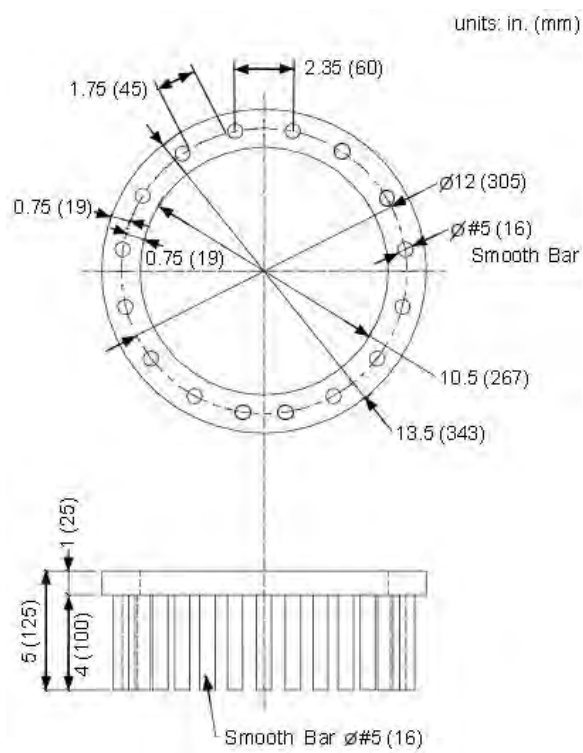

Figure 1. J-Ring Apparatus

3. MATERIALS

The sample of SCC from which test specimens are made shall be obtained according to Section I of Illinois Test SCC-1.

4. PROCEDURE

a. Dampen the J-Ring, slump cone, and base plate.

b. Place the base plate on level, stable ground. Center the J-Ring on the base plate. The mold shall be centered within the J-Ring and inverted with the smaller diameter opening down.

c. Fill the mold in one lift without vibration, roddding, or tapping.

c. Strike off the surface of the concrete level with the top of the mold using the tamping rod or strike-off bar. Remove surplus concrete from around the base of the mold and base plate surface.

e. Raise the mold vertically a distance of 225 ± 75 mm (9 ± 3 in.) in 3 ± 1 seconds without any lateral or torsional motion. Complete the test procedure from the start of filling through removal of the mold without interruption and within an elapsed time of 2.5 minutes.

f. When the concrete has stopped flowing, measure the maximum diameter of the resulting slump flow and measure the diameter perpendicular to the maximum. Each measurement shall be the nearest 10 mm (0.5 in.). If the two measurements differ by more than 50 mm (2 in.), verify base plate to be level, and test again.

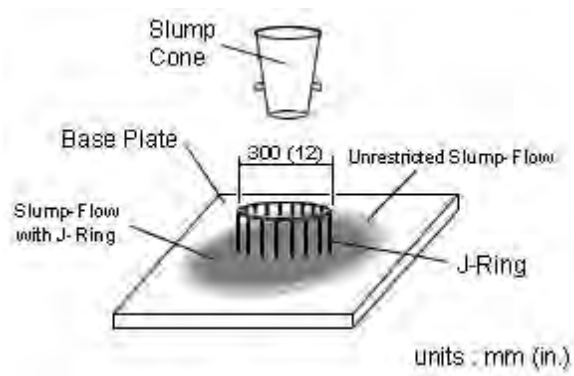

Figure 2. J-Ring Test

g. Calculate the average of the two measured diameters. This is the J-Ring flow.

h. Calculate the difference between the J-Ring flow and the unobstructed slump flow, as tested according to Illinois Test SCC-2, of the same representative sample. This is the J-Ring value. Rate the passing ability of SCC using the criteria in Table 1.

Table 1 – Passing Ability Rating

J-Ring Value, mm (in.)	Passing Ability Rating	Remarks
0 – 25 (0 – 1)	0	High passing ability
> 25 – 50 (> 1 – 2)	1	Moderate passing ability
> 50 (> 2)	2	Low passing ability

5. REPORT

a. Report the unobstructed slump flow (average of two measured diameters) and J-Ring flow (average of two measured diameters) to the nearest 5 mm (0.25 in.).

b. Report the J-Ring value and corresponding passing ability rating.

Standard Test Method for Passing Ability of Self-Consolidating Concrete by L-Box

Referenced Test Procedure(s):

4. Illinois Test Procedure SCC-1, Sampling, Determining Yield and Air Content, and Making and Curing Strength Test Specimens of Self-Consolidating Concrete

5. AASHTO T 119 (Illinois Modified), Slump of Hydraulic-Cement Concrete

6. ASTM E 29 (Illinois Modified), Standard Practice for Using Significant Digits in Test Data to Determine Conformance with Specifications

To maintain brevity in the text, the following will apply:
Example: Illinois Test Procedure SCC-1 will be designated as "Illinois Test SCC-1."
AASHTO T 119 (Illinois Modified) will be designated as "T 119."
ASTM E 29 (Illinois Modified) will be designated as "ASTM E 29."

3. GENERAL

This test method covers the determination of the flowability and passing ability of self-consolidating concrete (SCC) using the L-Box. The flow heights ratio is a measure of the passing ability of SCC. The flow times (T_{20} and T_{40}) are a measure of the flowability of SCC.

All rounding shall be according to ASTM E 29.

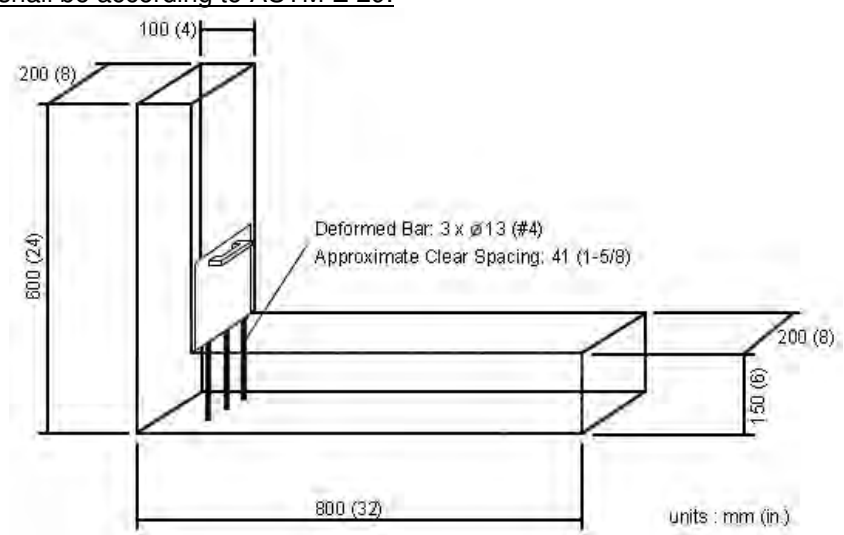

Figure 1. L-Box Apparatus

4. EQUIPMENT

a. L-Box – See Figure 1. The inside surface of the L-Box walls shall be of a smooth, rigid, nonabsorbent material.

b. Tamping Rod or Strike-Off Bar – The tamping rod shall conform to that described in T 119. The strike-off bar shall be a flat straight bar at least 3 mm (0.125 in.) x 20 mm (0.75 in.) x 300 mm (12 in.).

c. Suitable container for filling L-Box.

d. Measuring Tape – The measuring tape shall have a minimum gradation of 10 mm (0.5 in.).

e. Stopwatch – *Optional.* The stopwatch shall have a minimum reading of 0.2 seconds.

3. MATERIALS

The sample of SCC from which test specimens are made shall be obtained according to Section I of Illinois Test SCC-1.

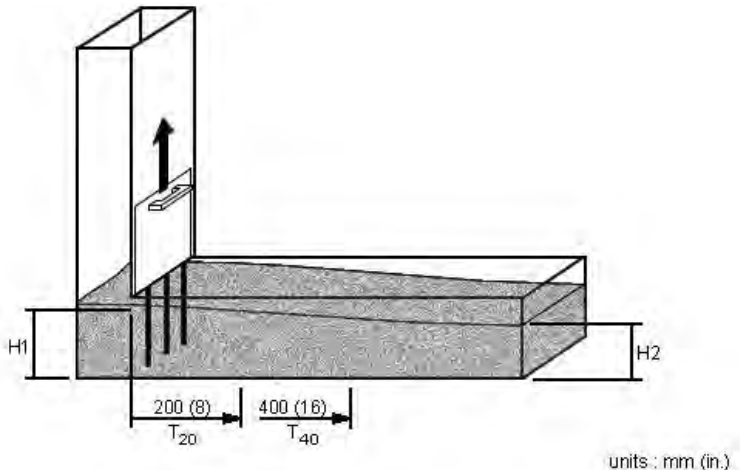

Figure 2. L-Box Test

4. PROCEDURE

a. Dampen the L-Box.

b. Place the L-Box on level, stable ground.

c. Ensure the sliding gate is shut, and fill the vertical of the L-Box in one lift without vibration, rodding, or tapping.

d. Strike off the surface of the concrete level with the top of the L-Box using the tamping rod or strike-off bar.

e. Allow the test specimen to stand for 1 minute.

f. Raise the sliding gate. Complete the test procedure from the start of filling through opening of the sliding gate without interruption and within 5 minutes.

g. *Optional.* Determine the time in seconds it takes for the concrete flow to travel 200 mm (8 in.) and 400 mm (16 in.), as measured from the time the sliding gate is lifted. These are the T_{20} and T_{40} times, respectively. Refer to Figure 2.

h. When the concrete has stopped flowing, measure the height of the resulting flow at the sliding gate, H1, and at the end of the horizontal, H2, to the nearest 5 mm (0.25 in.).

i. Calculate the blocking ratio as follows:

$$\textit{Blocking Ratio} = \frac{H2}{H1} \times 100$$

5. REPORT

a. Report the filling heights, H1 and H2, to the nearest 5 mm (0.25 in.).

b. Report the blocking ratio, H2/H1, to the nearest 1 percent.

c. Report observations of bleeding, and/or air popping on the surface of the concrete flow.

d. *Optional.* Report the T_{20} and T_{40} flow times to the nearest 0.2 second.

Standard Test Method for Static Segregation of Hardened Self-Consolidating Concrete Cylinders[1]

Referenced Test Procedure(s):

1. Illinois Test Procedure SCC-1, Sampling, Determining Yield and Air Content, and Making and Curing Strength Test Specimens of Self-Consolidating Concrete
2. AASHTO T 22 (Illinois Modified), Compressive Strength of Cylindrical Concrete Specimens
3. AASHTO T 23 (Illinois Modified), Making and Curing Concrete Test Specimens in the Field
4. AASHTO T 24, Obtaining and Testing Drilled Cores and Sawed Beams of Concrete
5. AASHTO T 119 (Illinois Modified), Slump of Hydraulic-Cement Concrete
6. AASHTO R 39 (Illinois Modified), Making and Curing Concrete Test Specimens in the Laboratory

To maintain brevity in the text, the following will apply:
Example: Illinois Test Procedure SCC-1 will be designated as "Illinois Test SCC-1."
AASHTO T 22 (Illinois Modified) will be designated as "T 22."

1. GENERAL

This test method covers the determination of the static segregation resistance (stability) of self-consolidating concrete (SCC). The visual assessment, using a Hardened Visual Stability Index (HVSI), of cast or cored hardened cylinders cut lengthwise in two is a measure of the stability of SCC.

2. EQUIPMENT

a. Mold – The mold shall be a 6 x 12 in. (150 x 300 mm) cylinder mold and conform to T 23 or R 39.

b. Tamping Rod or Strike-Off Bar – The tamping rod shall conform to that described in T 119. The strike-off bar shall be a flat straight bar at least 0.125 x 0.75 x 12 in. (3 x 20 x 300 mm).

c. Suitable container for filling specimen molds.

d. Saw – The saw shall have a diamond or silicon-carbide cutting edge and shall be capable of cutting specimens without excessive heating or shock.

e. Core Drill – The core drill shall have diamond impregnated bits attached to a core barrel.

3. MATERIALS

The sample of SCC from which fresh test specimens are made shall be obtained according to Section I of Illinois Test SCC-1. Cored specimens from hardened concrete shall be obtained according to T 24 and have a minimum diameter of 50 mm (2 in.). When necessary as determined by the Engineer, the core may be taken so that its axis is perpendicular to the concrete as it was originally placed as long as the core diameter is sufficiently large enough to assess extent of static segregation.

[1]Test method developed by the Illinois Department of Transportation (Original Effective Date: August 12, 2004). Test method submitted to AASHTO by Illinois Department of Transportation. The AASHTO version is similar and is known as AASHTO PP 58.

4. PROCEDURE

a. A minimum of two fresh test specimens shall be made according to T 23 or R 39, except for the following:

   i. The specimen molds shall be filled in one lift using a suitable container without vibration, rodding, or tapping.

   ii. Strike off the surface of the concrete level with the top of the mold using the strike-off bar or tamping rod.

   iii. The slump flow, VSI, air content, and temperature of each batch of concrete, from which specimens are made, shall be measured immediately after remixing.

b. Immediately after being struck off, the specimens shall be capped with a plastic cylinder lid and moved to the storage place where they will remain undisturbed. The specimens shall be assigned an identification number, and the date of molding, location of concrete, and mix design number shall be recorded.

c. Before being subjected to sawing, the specimens shall have had a minimum curing period of 24 hours at a minimum temperature of 16 °C (60 °F) ***or*** attained a minimum compressive strength of 6200 kPa (900 psi) according to T 22.

d. The specimens shall be saw cut lengthwise down the center through its diameter. If the specimen cannot be satisfactorily sawed smooth from lack of curing, then the remaining specimen(s) shall remain undisturbed for an additional minimum curing period of 24 hours before being subjected to sawing.

e. Make a visual assessment of the cut plane of the hardened concrete cylinder(s) using the criteria in Table 1 and illustrated in Figures 1 – 8. The cut plane shall be wetted to facilitate visual inspection.

Table 1 – Hardened Visual Stability Index (HVSI)

HVSI	CRITERIA
0 stable	No mortar layer at the top of the cut plane and no variance in size and percent area of coarse aggregate distribution from top to bottom.
1 stable	Slight mortar layer, less than or equal to 6 mm (1/4 in.) tall, at the top of the cut plane and slight variance in size and percent area of coarse aggregate distribution from top to bottom.
2 unstable	Mortar layer, less than or equal to 25 mm (1 in.) tall, at the top of the cut plane and distinct variance in size and percent area of coarse aggregate distribution from top to bottom.
3 unstable	Clearly segregated as evidenced by a mortar layer greater than 25 mm (1 in.) tall and considerable variance in size and percent area of coarse aggregate distribution from top to bottom.

5. REPORT

a. Report the identification number and required information for each hardened specimen.

b. Report the Hardened Visual Stability Index (HVSI) for each hardened specimen.

[1]Test method developed by the Illinois Department of Transportation (Original Effective Date: August 12, 2004). Test method submitted to AASHTO by Illinois Department of Transportation. The AASHTO version is similar and is known as AASHTO PP 58.

Single Coarse Aggregate Mixture

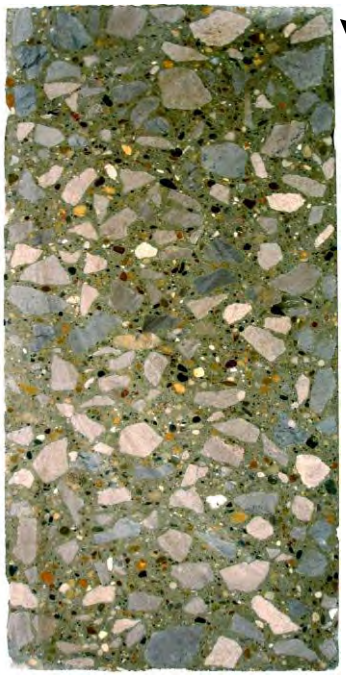

No mortar layer.

Uniform distribution of coarse aggregate from top to bottom.

Figure 1. HVSI = 0, stable

Figure 2. HVSI = 0, stable

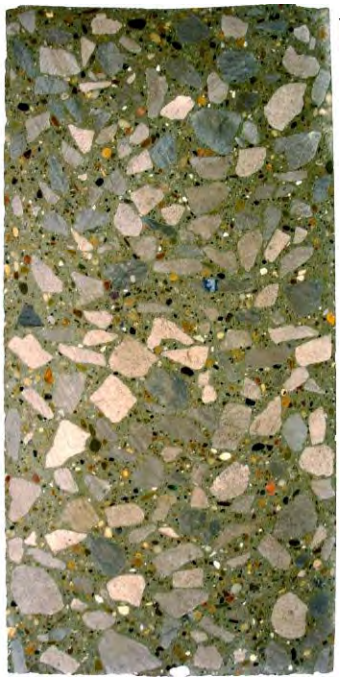

Slight mortar layer, ≤ 6 mm (1/4 in.), and slight variance of coarse aggregate distribution from top to bottom.

Figure 3. HVSI = 1, stable

Figure 4. HVSI = 1, stable

Uniformly Graded Coarse Aggregate Mixture

[1]Test method developed by the Illinois Department of Transportation (Original Effective Date: August 12, 2004). Test method submitted to AASHTO by Illinois Department of Transportation. The AASHTO version is similar and is known as AASHTO PP 58.

Single Coarse Aggregate Mixture **Uniformly Graded Coarse Aggregate Mixture**

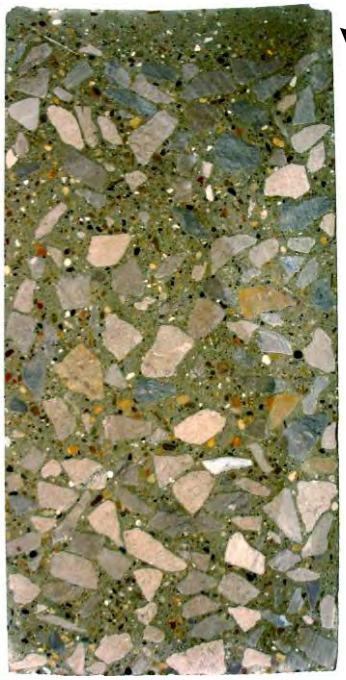

Visible mortar layer ≤ 1 in. (25 mm), and distinct variance of coarse aggregate distribution from top to bottom.

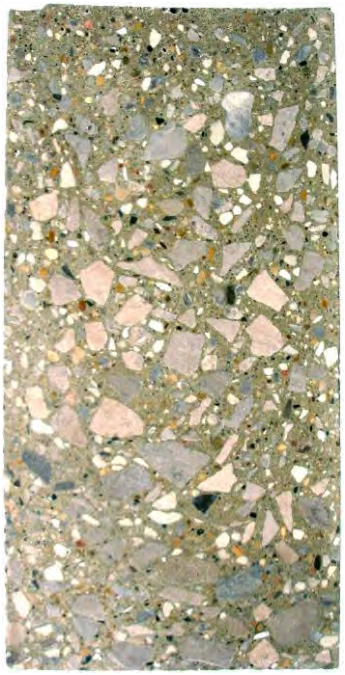

Figure 5. HVSI = 2, unstable

Figure 6. HVSI = 2, unstable

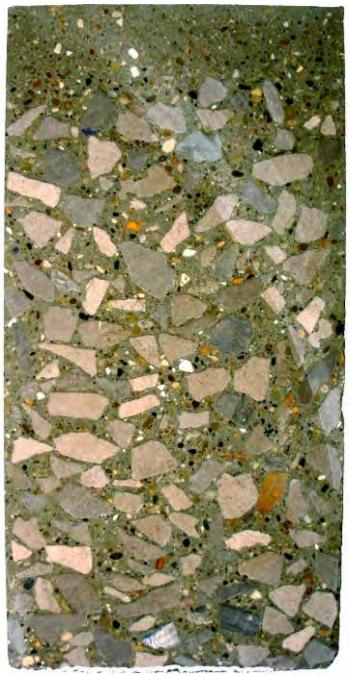

Visible Mortar layer > 1 in. (25 mm) and considerable variance of coarse aggregate distribution from top to bottom.

Note contrast at top. This is a layer of foam, which may be visible in any stable or unstable mix.

Figure 7. HVSI = 3, unstable

Figure 8. HVSI = 3, unstable

[1]Test method developed by the Illinois Department of Transportation (Original Effective Date: August 12, 2004). Test method submitted to AASHTO by Illinois Department of Transportation. The AASHTO version is similar and is known as AASHTO PP 58.

Test Method for Assessment of Dynamic Segregation of Self-Consolidating Concrete During Placement[1]

Referenced Test Procedure(s):

1. Illinois Test Procedure SCC-6, Standard Test Method for Static Segregation of Hardened Self-Consolidating Concrete Cylinders
2. Illinois Specification 101, Minimum Requirements for Electronic Balances
3. AASHTO M 92, Standard Specification for Wire Cloth Sieves for Testing Purposes
4. AASHTO T 23 (Illinois Modified), Making and Curing Concrete Test Specimens in the Field
5. AASHTO T 119 (Illinois Modified), Slump of Hydraulic-Cement Concrete
6. ASTM E 29 (Illinois Modified), Standard Practice for Using Significant Digits in Test Data to Determine Conformance with Specifications

To maintain brevity in the text, the following will apply:
Example: Illinois Test Procedure SCC-1 will be designated as "Illinois Test SCC-1."
AASHTO T 23 (Illinois Modified) will be designated as "T 23."
ASTM E 29 (Illinois Modified) will be designated as "ASTM E 29."

1. GENERAL

This test method covers the evaluation of the dynamic segregation resistance (stability) of self-consolidating concrete (SCC). The visual assessment using a Hardened Visual Stability Index (HVSI) or the coarse aggregate weight (mass) retained ratio are measures of the stability of SCC.

All rounding shall be according to ASTM E 29.

2. EQUIPMENT

a. Specimen Mold – The mold shall be a 6 x 12 in. (150 x 300 mm) cylinder mold and conform to T 23.

b. Tamping Rod or Strike-Off Bar – The tamping rod shall conform to that described in T 119. The strike-off bar shall be a flat straight bar at least 0.125 x 0.75 x 12 in. (3 x 20 x 300 mm).

c. Suitable container for filling specimen molds.

d. Saw – *Procedure Option A only*, The saw shall have a diamond or silicon-carbide cutting edge and shall be capable of cutting specimens without excessive heating or shock.

e. Sieve – *Procedure Option C only*, The sieve shall be a No. 4 (4.75 mm) rectangular sieve of minimum dimensions 13 x 25 in. (330 x 635 mm) manufactured according to AASHTO M 92.

f. Balance – *Procedure Option C only*, The balance shall be according to Illinois Specification 101 for portland cement concrete unit weight measurements.

3. MATERIALS

Test specimens shall be made from separate samples of SCC obtained at or near 1) the point of discharge by deliver equipment, and 2) the point of flow termination as approved by the Engineer.

[1]Test method developed by the Illinois Department of Transportation (Original Effective Date: May 1, 2006).

4. PROCEDURE

Option A—For each of the two samples obtained (i.e., one at or near the point of discharge and another at point of flow termination), conduct testing according to Illinois Test SCC-6 for assessment of Hardened Visual Stability Index (HVSI).

Option B—Reserved.

Option C—Obtain two samples (i.e., one at or near the point of discharge and another at point of flow termination) and determine the Dynamic Segregation Index as follows:

a. Fill the mold in one lift without vibration, rodding, or tapping.

b. Strike off the surface of the concrete level with the top of the mold using the tamping rod or strike-off bar.

c. Wet wash over the No. 4 (4.75 mm) sieve the sample collected at or near the point of discharge.

d. Blot any free water from the retained coarse aggregate particles' surface with a towel to achieve a saturated surface dry (SSD) condition.
e. Determine the weight (mass) of the coarse aggregate to the nearest 0.1 lb. (50 g).
f. Repeat a. – e. for the sample collected at the point of flow termination.
g. Calculate the Dynamic Segregation Index (DSI) as follows:

$$DSI = \frac{(CA_1 - CA_2)}{CA_1} \times 100$$

Where: CA_1 = weight (mass) of coarse aggregate collected at or near the point of discharge
CA_2 = weight (mass) of coarse aggregate collected at the point of flow termination

5. REPORT

For all procedures,
a. Report maximum length of flow and maximum and minimum width of flow path.

b. Report approximate rate, feet per minute (meters per minute).

c. Report reinforcement bar size(s) and typical longitudinal and lateral spacing.

Procedure Option A only,
a. Report the Hardened Visual Stability Index (HVSI) rating for each hardened specimen.

Procedure Option B—Reserved.

Procedure Option C only,
d. Report the SSD weight (mass) of coarse aggregate collected at or near the point of discharge and point of flow termination, CA_1 and CA_2, respectively, to the nearest 0.1 lb. (50 g).

e. Report the Dynamic Segregation Index (DSI) to the nearest 1 percent.

[1]Test method developed by the Illinois Department of Transportation (Original Effective Date: May 1, 2006).

Provisional Test Method for Dynamic Segregation of Fresh Self-Consolidating Concrete by Flow Trough[1]

This is a provisional test method requiring field trials.

Referenced Test Procedure(s):

1. Illinois Test Procedure SCC-1, Sampling, Determining Yield and Air Content, and Making and Curing Strength Test Specimens of Self-Consolidating Concrete
2. Illinois Specification 101, Minimum Requirements for Electronic Balances
3. AASHTO M 92, Standard Specification for Wire Cloth Sieves for Testing Purposes
4. AASHTO T 23 (Illinois Modified), Making and Curing Concrete Test Specimens in the Field
5. AASHTO R 39 (Illinois Modified), Making and Curing Concrete Test Specimens in the Laboratory
6. ASTM E 29 (Illinois Modified), Standard Practice for Using Significant Digits in Test Data to Determine Conformance with Specifications

To maintain brevity in the text, the following will apply:
Example: Illinois Test Procedure SCC-1 will be designated as "Illinois Test SCC-1."
AASHTO T 23 (Illinois Modified) will be designated as "T 23."
ASTM E 29 (Illinois Modified) will be designated as "ASTM E 29."

1. GENERAL

This test method covers the determination of the dynamic segregation (stability) of self-consolidating concrete (SCC) using the flow trough. The Dynamic Segregation Index (DSI) is a measure of the dynamic segregation of SCC. A minimum slump flow of 24 in. (610 mm) is recommended to perform the test.

All rounding shall be according to ASTM E 29.

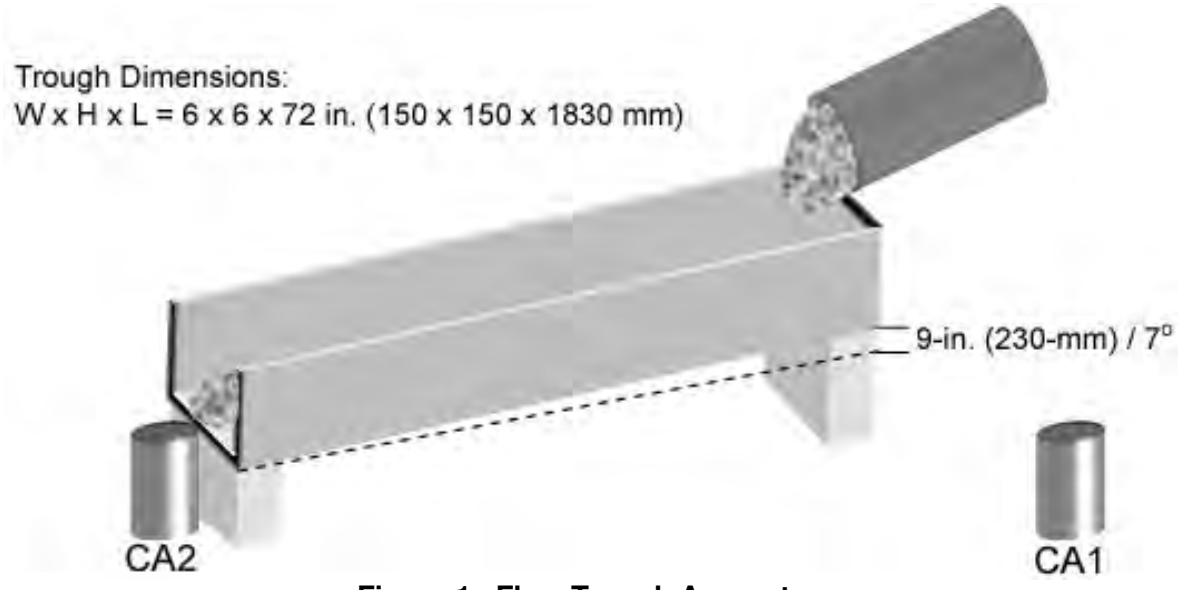

Figure 1. Flow Trough Apparatus

[1]Test method developed by the Illinois Department of Transportation (Original Effective Date: August 1, 2007).

2. EQUIPMENT

a. Flow trough – See Figure 1. The inside walls shall be of a smooth, rigid, nonabsorbent material.

b. Molds (×4) – Two cylinder molds with dimensions 4 x 8 in. (100 x 200 mm) and two cylinder molds with dimensions 6 x 12 in. (150 x 300 mm), and conforming to T 23 or R 39.

c. Tamping Rod or Strike-Off Bar – The tamping rod shall conform to that described in T 119. The strike-off bar shall be a flat straight bar at least 0.125 x 0.75 x 12 in. (3 x 20 x 300 mm).

d. Sieve – No. 4 (4.75 mm) rectangular sieve of minimum dimensions 13 x 25 in. (330 x 635 mm) manufactured according to AASHTO M 92.

e. Balance – The balance shall be according to Illinois Specification 101 for portland cement concrete unit weight measurements.

3. MATERIALS

The sample of SCC from which the test is performed shall be obtained according to Section I of Illinois Test SCC-1.

4. PROCEDURE

a. Perform a slump flow test according to Illinois Test Procedure SCC-2.

b. Dampen the flow trough.

c. Place the flow trough on level, stable ground, ensuring the correct 7°-slope is maintained (height difference between the two ends is 9 in. (230 mm)).

d. Fill a 4 x 8 in. (100 x 200 mm) mold in one lift without vibration, rodding, or tapping. Strike off the surface of the concrete level with the top of the mold using the tamping rod or strike-off bar, and set the filled mold to the side for the moment.

e. Fill two 6 x 12 in. (150 x 300 mm) molds in one lift without vibration, rodding, or tapping.

f. At the high end of the flow trough, pour the concrete from one of the 6 x 12 in. (150 x 300 mm) molds.

g. After the concrete stops flowing, lift the high end of the flow trough vertically for 30 seconds, allowing the concrete to flow off the other end, leaving a priming layer of mortar on the trough surface.

h. Return the flow trough to its initial position, and repeat Step e. using the concrete from the other 6 x 12 in. (150 x 300 mm) mold.

i. Collect the concrete flow at the other end using an empty 4 x 8 in. (100 x 200 mm) mold.

j. Strike off the surface of the concrete level with the top of the mold using the tamping rod or strike-off bar.

k. Separately wet wash over the No. 4 (4.75 mm) sieve the samples from the two 4 x 8 in. (100 x 200 mm) molds (Steps c. and h.).

l. Determine each sample's weight (mass) of retained coarse aggregate to the nearest 0.05 lb. (20 g).

m. Calculate the Dynamic Segregation Index (DSI) as follows:

$$DSI = \frac{(CA_1 - CA_2)}{CA_1} \times 100$$

Where: CA_1 = weight (mass) of coarse aggregate in the first mold (Step c.)

CA_2 = weight (mass) of coarse aggregate collected in the second mold (Step h.)

5. REPORT

f. Report the slump flow according to Illinois Test Procedure SCC-2.

g. Report CA_1 and CA_2 to the nearest 0.05 lb. (20 g).

h. Report the Dynamic Segregation Index (DSI) to the nearest 1 percent.

[1]Test method developed by the Illinois Department of Transportation (Original Effective Date: May 1, 2006).

Standard Method of Test for

Determining Formwork Pressure of Fresh Self-Consolidating Concrete Using Pressure Transducers[1]

1. SCOPE

1.1 This method covers the measurement of formwork pressure of fresh self-consolidating concrete (SCC) using pressure transducers attached to formwork.

1.2 This is a field test with the intention of measuring formwork pressure during placement of SCC.

1.3 The text of this standard references notes and footnotes that provide explanatory information. These notes shall not be considered as requirements for this standard.

1.4 The values stated in SI units are to be regarded as the standard.

1.5 *This standard may involve hazardous materials, operations, and equipment. This standard does not purport to address all of the safety concerns, if any, associated with its use. It is the responsibility of the user of this standard to establish appropriate safety and health practices and determine the applicability of regulatory limitations prior to use.*

2. REFERENCED DOCUMENTS

2.1 *ASTM Standards*:

- C 125, Standard Terminology Relating to Concrete and Concrete Aggregates

3. SIGNIFICANCE AND USE

3.1 This method is applicable when there is a concern about SCC form pressures that may exceed the rated strength of the formwork. SCC shall be defined by ASTM C 125.

Note 1— Formwork less than or equal to 3 m (10 ft) tall constructed of commercial forms rated at 57.5 kPa (1200 psf) or greater may be able to resist the SCC pressures encountered in the field. However, the engineer is still responsible for the formwork design.

[1]Test method developed by the Illinois Department of Transportation (Original Effective Date: January 1, 2008). The test method provided is based on the version submitted to AASHTO by Illinois Department of Transportation. The AASHTO version is similar and is known as AASHTO TP 93.

4. APPARATUS AND MATERIALS

4.1 *Pressure Transducer*— a suitable pressure transducer for measuring pressure from SCC.

Figure 1—Pressure Transducer

4.2 *Data Acquisition System*— a suitable data acquisition interface for obtaining pressure readings from pressure transducers.

4.3 *Bracket*— a bracket conforming to the pressure transducer and formwork geometry shall be used for attaching the pressure transducer to the formwork. Figures 2 and 3 show one such bracket system.

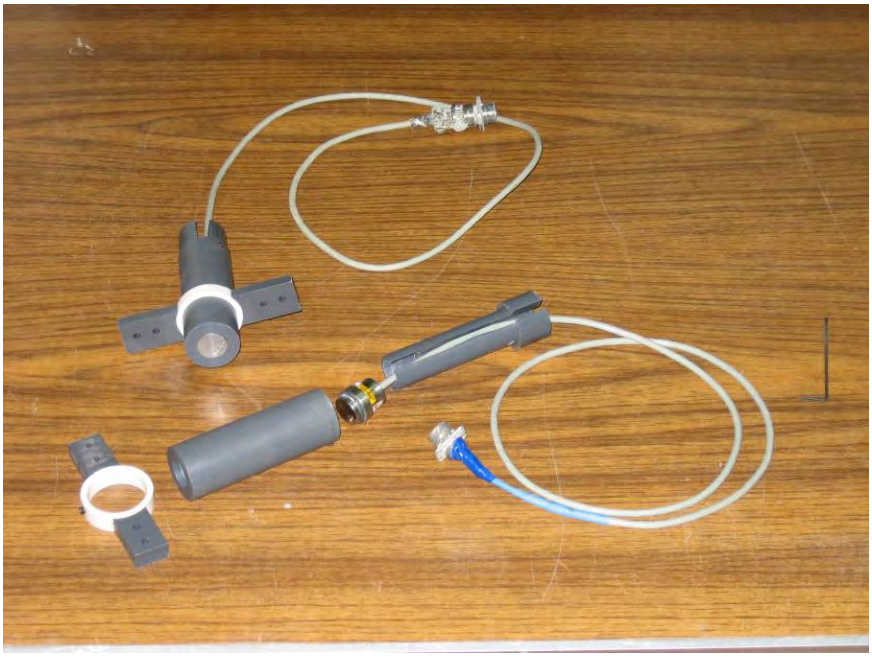

Figure 2—Bracket for Attaching Pressure Transducer to Formwork

Figure 3—Bracket with Pressure Transducer Attached to Formwork

4.4 *Portable Hand Drill and Bit*— a suitable drill and bit for drilling pressure transducer access holes.

4.5 *Baby Powder and Cellophane Wrap*— suitable materials for covering the pressure transducer face.

Note 2— A Vishay Model P3 Strain Indicator and Recorder with Honeywell Model AB/HP pressure transducers have been used for measuring pressures from SCC. The Vishay unit will accommodate four pressure transducers, and the required access hole for the Honeywell Model AB/HP pressure transducer is 35 mm (1 3/8 in.) in diameter.

5. PROCEDURE

5.1 *Prepare access hole for pressure transducer*:

5.1.1 Drill an appropriate size access hole through the formwork for the pressure transducer which will allow measurement of pressure.

5.2 *Mount pressure transducer:*

5.2.1 Mount the pressure transducer to the formwork using the bracket system. The pressure transducer face shall extend through a hole drilled in the formwork, and shall align flush with the inside form surface.

5.2.2 The face of the pressure transducer shall be protected with a light dusting of baby powder and a single layer of cellophane wrap on top.

Note 3—This technique prevents direct contact of the SCC with the pressure transducer face while ensuring measurement of pressure.

5.3 *Location of pressure transducers:*

5.3.1 Install a minimum of one pressure transducer at or near each point of SCC placement. The first pressure transducer below the point of SCC placement shall be approximately 300 mm (12 in.) above the base of the formwork. Additional pressure transducers shall be installed above the bottom transducer at the direction of the formwork design engineer.

Note 4— The reason a pressure transducer is installed at or near the point of SCC placement is due to the higher formwork pressure at this location.

5.4 *Recording pressure and form filling rate:*

5.4.1 The pressure shall be observed and recorded periodically to ensure that the pressure remains under the rated strength of the formwork during the pour. The calculation and recording of form filling rate during the pour should also be performed periodically to evaluate the pour rate influence.

Note 5— The measured pressure will rise as the formwork is filled with SCC, but will eventually slow down and start falling as the SCC begins to gel and stiffen.

Formwork pressure is also a function of the form filling rate. If the rate is low, the maximum pressure will be relatively low. If the rate is very high, the pressure may approach hydrostatic pressure. It is cautioned that if the form filling rate is significantly increased later in the day, formwork pressure above a pressure transducer location will likely be higher than the pressure at the transducer. In addition, stopping and subsequently starting a pour will cause the pressure to fluctuate. Therefore, it is important to maintain relatively constant pour rates through the day.

6. REPORT

6.1 The report shall include the following:

6.1.1 The formwork rating by the manufacturer,

6.1.2 The measured pressure at various times during the pour, and

6.1.3 The peak pressure.

6.2 The report should include the form filling rate.

7. KEYWORDS

7.1 Self-consolidating concrete (SCC); formwork pressure; pressure transducer; data acquisition system; bracket; form filling rate; measured pressure; hydrostatic pressure.

Development of Gradation Bands on Incoming Aggregate at Mix Plants
Appendix A1

Effective: January 1, 1994
Revised: June 1, 2012

A. Scope

Quality Control Plans for QC/QA Contracts normally require incoming aggregate to be checked for gradation compliance before use in mix plants. Aggregate is produced to tight gradation bands at the source but will degrade during handling and shipment.

B. Purpose

Establish a procedure to modify aggregate source gradation bands to develop mix plant gradation bands for use in checking gradation compliance on incoming aggregate at mix plants. The mix plant gradation bands will also be used in checking gradation compliance for required stockpile gradation tests at the mix plant.

C. Aggregate Source Gradation Bands

The Contractor shall obtain certified aggregate gradation bands (including master band, if required) from the aggregate source for all certified aggregates prior to any shipment of material to the mix plant. Natural sand gradation bands shall be obtained from the appropriate District Materials Engineer.

D. General Procedure

The Contractor may modify the aggregate source gradation bands according to the following procedures, if necessary, to check incoming aggregate for gradation compliance at the mix plant. If not modified, the aggregate source gradation bands shall be considered the mix plant gradation bands when checking incoming aggregate.

1. Coarse Aggregate—The Contractor may shift the aggregate source master band a maximum of three percent (3%) upwards to establish a Mix Plant Master Band for each coarse aggregate used. All other aggregate source gradation bands, except for the top sieve and bottom sieve bands in the gradation specification, may also be shifted upward a maximum of three percent (3%). The top sieve and bottom sieve bands shall not be changed, except as follows:

   At portland cement concrete plants, the Contractor may increase the specification limit for the minus 75-µm (No. 200) Illinois Test Procedure 11 sieve material upwards one half percent (0.5%) if the 75-µm (No. 200)

material consists of dust from fracture, or degradation from abrasion and attrition, during stockpiling and handling (reference Article 1004.01[b] of the Department's *Standard Specifications for Road and Bridge Construction*.

2. Manufactured Sand—All aggregate source gradation bands, except the top sieve and bottom sieve bands in the gradation specification, for each certified manufactured sand may be shifted upwards a maximum of three percent (3%). The top sieve and bottom sieve bands shall not be changed.

3. Natural Sand—The gradation bands obtained from the Department for each natural sand shall not be changed.

E. Department Approval

All aggregate source gradation bands and mix plant gradation bands must be sent to the District Materials Engineer for approval prior to any shipment of aggregate to the mix plant. Once approved, the mix plant gradation bands shall not be changed without approval of the District Materials Engineer.

Quality Control (QC) Manager / Aggregate Technician / AGCS Technician / Mixture Aggregate Technician / IDOT Inspector / Gradation Technician Responsibilities
(Chapter 7, Aggregate Technician Course Manual)
Appendix A2

Effective: November 1, 1995
Revised: January 1, 2011

7.0 QUALITY CONTROL (QC) MANAGER / AGGREGATE TECHNICIAN / AGCS TECHNICIAN / MIXTURE AGGREGATE TECHNICIAN / IDOT INSPECTOR / GRADATION TECHNICIAN RESPONSIBILITIES

The Quality Control (QC) Manager, Aggregate Technician, AGCS Technician, Mixture Aggregate Technician, IDOT Aggregate Inspector, and the Gradation Technician have specific responsibilities under the Aggregate Gradation Control System. Many of these responsibilities are similar, including gradation sampling/testing and visual inspection of production. Several are limited to the QC Manager, the Aggregate Technician, or the IDOT Aggregate Inspector. It should be noted that only the Aggregate Technician or the AGCS Technician may also be the QC Manager.

The following table denotes the responsibilities and the person responsible.

	QC Manager	Aggregate Tech.	AGCS Tech.	Mixture Agg. Tech.	IDOT Inspector	Gradation Tech.
▪ Knowledge of Specs	X	X	X		X	
▪ Quality Sampling					X	
▪ Visual Inspection	X	X	X		X	
▪ Gradation Sampling	X	X	X	X	X	
▪ Gradation Testing	X Note 2	X		X	X	X **Note 1**
▪ Plant Diary	X	X	X	X		
▪ Aggregate Certification	X					
▪ Safety	X	X	X	X	X	X

Note 1: Only under direct supervision of Aggregate Technician or Mixture Aggregate Technician
Note 2: Not allowed for AGCS Technician

Each responsibility is discussed below.

Quality Control (QC) Manager / Aggregate Technician / AGCS Technician / Mixture Aggregate Technician / IDOT Inspector / Gradation Technician Responsibilities
(Chapter 7, Aggregate Technician Course Manual)
Appendix A2

Effective: November 1, 1995
Revised: January 1, 2011

7.1 **Knowledge of Current Specifications.** The QC Manager, the Aggregate Technician, the AGCS Technician, and the IDOT Aggregate Inspector must maintain up-to-date knowledge of the specifications that apply to the aggregate products currently being produced at the Source. The Aggregate Technician and the AGCS Technician shall have available at the Source a copy of the current Standard Specification, any applicable supplemental specifications, and the *Manual of Test Procedures for Materials*. All four individuals shall be aware of any special provisions which change current aggregate specifications. This applies to both quality and gradation specifications. A copy of the current Standard Specifications, Sections 1003 and 1004, and the supplemental specifications for Sections 1003 and 1004 are located in the Appendix.

7.2 **Quality Sampling / Testing.** IDOT will continue to sample and test all aggregates for quality. The IDOT Aggregate Inspector shall sample any certified stockpile at the frequency designated in the *Manual for Aggregate Inspection*. All quality samples are sent to the Central Bureau of Materials and Physical Research for testing. The tests run were discussed previously in Chapter 3.0 herein. Any certified stockpile must meet the designated quality before shipment. Willful shipment of out-of-specification material shall be handled according to Section 11.2 of the Department's current Policy Memorandum, "Aggregate Gradation Control System (AGCS)", in Chapter 8.0.

Although the Aggregate Technician/AGCS Technician will not be sampling or testing for quality, he will be notified when sampling occurs and may witness the sampling. The Aggregate Technician/AGCS Technician should obtain and maintain quality information on specific ledges, production methods, and the certified stockpiles. Shipment of approved material remains the responsibility of the Source.

A Consultant, hired by the Department to perform the duties of an Aggregate Inspector, shall not be allowed to take any quality or Freeze-Thaw samples at an aggregate source.

7.3 **Visual Inspection.** The responsibility of visually inspecting an aggregate Source's process on a frequent basis falls on the Aggregate Technician, the AGCS Technician, and the IDOT Aggregate Inspector. Visual inspection can be defined as observing the processing or production area, the stockpiling methods, and the loading/handling operation, as well as the condition of the aggregate in the flow stream or stockpiles.

7.3.1 For the Aggregate Technician/AGCS Technician, visual inspections shall be a daily occurrence—**several** (three or more) inspections spread uniformly throughout the production day—while producing certified aggregate. Visual inspections by the IDOT Aggregate Inspector may be at a reduced frequency. Most

Quality Control (QC) Manager / Aggregate Technician / AGCS Technician / Mixture Aggregate Technician / IDOT Inspector / Gradation Technician Responsibilities
(Chapter 7, Aggregate Technician Course Manual)
Appendix A2

Effective: November 1, 1995
Revised: January 1, 2011

Aggregate/AGCS Technicians/Inspectors will establish an inspection route when they enter the Source. As an example, the inspection route will take them past the ledge face to verify from where the raw feed is coming. This also allows for visual examination of the face for contamination or the intrusion of poor quality material into the ledge.

The production plant, from the primary crusher to the final screening/logwashing, is visited next. This stop verifies that the correct production method is being used to produce the required quality and gradation. Problems with equipment, such as screen cloth, etc., can be observed and corrected.

Finally, the stockpiling/load-out area can be observed. Segregation, degradation, or contamination can be readily identified and proper steps taken to eliminate the problems.

7.3.2 This quick type of inspection helps the Aggregate Technician/AGCS Technician/ Inspector "keep a handle on" the aggregate being produced. It does not take away from actual testing of the aggregate but enhances the inspection to ensure quality aggregate.

Remember, it is an Aggregate/AGCS Technician's/Inspector's responsibility to observe the overall aggregate operation to detect segregation, degradation, and contamination that is detrimental to the quality of the aggregate product. These observations should be communicated immediately to the QC Manager for corrective action if necessary.

7.4 **Gradation Sampling.** Quality or gradation sampling involves taking a small, representative portion of a finished product for quality/gradation control or compliance testing. The word "representative" is perhaps the most important word in that definition, especially in conjunction with gradation testing. It is imperative that the sample accurately represents the material being produced. Inaccurate samples can lead to acceptable material being rejected or to non-acceptable material being used. In either case, non-representative sampling often results in higher construction/maintenance costs.

7.4.1 Under the Aggregate Gradation Control System, the Aggregate Technician, the AGCS Technician, the Mixture Aggregate Technician, and the IDOT Aggregate Inspector must know how to correctly sample aggregate for gradation testing. The Aggregate Technician/AGCS Technician/Mixture Aggregate Technician will have to sample at a specified frequency from both production and stockpiles. They may choose one of the approved production sampling methods described in Illinois Test Procedure 2, (Chapter 5.0 of the AGCS). The stockpile sampling method noted in Chapter 5.0 is the only method allowed for sampling a stockpile.

The IDOT Aggregate Inspector will sample on a very infrequent basis. Most of the IDOT monitor samples will be split samples taken and split by the Aggregate Technician/AGCS Technician/Mixture Aggregate Technician. However, the IDOT Aggregate Inspector may take a sample at any time under the program.

7.4.2 The frequency of sampling for the Aggregate Technician/AGCS Technician/Mixture Aggregate Technician, and the IDOT Aggregate Inspector is covered in the Department's current Policy Memorandum, "Aggregate Gradation Control System (AGCS)", in Chapter 8.0. The high number of samples required, especially by the Aggregate Technician/AGCS Technician/Mixture Aggregate Technician, makes it imperative that the technician/ inspector takes the time and has the knowledge to accurately sample for gradation testing. The overall program relies on accurate results to supply in-gradation aggregate to IDOT construction projects.

7.5 **Gradation Testing.** Illinois Test Procedure 11 / Illinois Test Procedure 27 (Chapter 6.0 of the AGCS) describes the correct and acceptable method to run a gradation test. As with gradation sampling, inaccurate results hurt both the aggregate producer as well as IDOT. It is therefore the responsibility of the Aggregate Technician, the Mixture Aggregate Technician, the Gradation Technician, and the IDOT Aggregate Inspector to correctly run the gradation test. The AGCS Technician is not allowed to split or run gradation tests under the AGCS.

7.6 **Plant Diary.** The Aggregate Technician/AGCS Technician is required to maintain a plant diary when producing under the program. This diary shall detail samples taken, pass/fail results, corrective action, plant/ledge changes, etc. on a daily basis. The diary must be kept at the Source for periodic checking by the IDOT Aggregate Inspector. See Example on [following page (page 7-6of Aggregate Technician Course Manual)].

The IDOT Aggregate Inspector is required to keep a personal diary on his daily inspection trips. Much of the same information required for the Aggregate Technician/AGCS Technician diary is noted by the IDOT Aggregate Inspector.

7.7 **Aggregate Certification.** The previous discussions on numerous individual responsibilities focus attention on the QC Manager's/Aggregate Technician's/AGCS Technician's/Inspector's overall responsibilities. The Source's QC Manager has the overall responsibility of certifying that material being placed on the certified stockpile is produced under and conforms to the Aggregate Gradation Control System. The production or quarry supervisor, if not the QC Manager, also assumes some of the responsibility for assuring that in-specification material is being made and shipped to IDOT projects.

The IDOT Aggregate Inspector, through his monitoring activities (sampling/ testing, visual inspection, etc.), must verify the continued compliance to the Aggregate Gradation Control System. Any lack of compliance, as noted by the IDOT Aggregate Inspector, will be grounds for Source decertification under the program and shall be communicated to the QC Manager as expediently as possible for correction.

7.8 **Safety.** It is the responsibility of the QC Manager, the Aggregate Technician, the AGCS Technician, the Mixture Aggregate Technician, the IDOT Aggregate Inspector, and the Gradation Technician to perform their respective duties in a safe manner. To assure that this condition is met, the QC Manager, the Aggregate Technician, the AGCS Technician, the Mixture Aggregate Technician, and the IDOT Aggregate Inspector should be familiar with any an all safety regulations in force. Great care should be taken when sampling around moving equipment, e.g., conveyor belts, screen decks, hopper grates, etc. Due to poor visibility and large truck/equipment traffic, caution should also be used when driving around the plants and stockpiles.

The QC Manager, the Aggregate Technician, the AGCS Technician, the Mixture Aggregate Technician, and the IDOT Aggregate Inspector must have a knowledge of applicable Mine Safety and Health Administration (MSHA) regulations. The IDOT Aggregate Inspector is also regulated by Departmental policies covered in the “Employee Safety Code” handbook.

Quality Control (QC) Manager / Aggregate Technician / AGCS Technician / Mixture Aggregate Technician / IDOT Inspector / Gradation Technician Responsibilities
(Chapter 7, Aggregate Technician Course Manual)
Appendix A2

Effective: November 1, 1995
Revised: January 1, 2011

EXAMPLE

Company Name: _____

Aggregate / AGCS Technician Plant Diary

Date:	
Plant Name:	
Weather:	
Ledge Information:	
Material Being Produced:	

VISUAL INSPECTION:	1ST VISIT	2ND VISIT	3RD VISIT	ADDITIONAL VISITS
Time:				
Stockpile/Loadout:				
Degradation	YES/NO	YES/NO	YES/NO	YES/NO
Segregation	YES/NO	YES/NO	YES/NO	YES/NO
Contamination	YES/NO	YES/NO	YES/NO	YES/NO
Plant:				
Pit Area:				
Graph(s):				
Samples Taken:				
Production				
Loadout:				
Resample:				
SIGNATURE:				

Problems: (Init./Time)	
Action Taken: (Init./Time)	
Comments:	

Aggregate Producer Control Chart Procedure
(Chapter 9, Aggregate Technician Course Manual)
Appendix A3

Effective: November 1, 1995
Revised: March 1, 2013

9.0 AGGREGATE PRODUCER CONTROL CHART PROCEDURE

Gradation control charts provide an effective way to monitor the aggregate production process and can present a graphical record of aggregate gradation during continuous production and stockpiling. Specific changes or gradual trends in a product's gradation can be readily identified before major trouble occurs. Other benefits that may also be realized by using control charts include but are not limited to:

- Decreased product variability
- Established production capabilities
- Permanent record of gradation quality
- Increased sense of "quality awareness" at the Source

For these reasons, an Aggregate Producer Control Chart Procedure is an important requirement in the Gradation Control Program at certified aggregate Sources in Illinois.

Under the Illinois Aggregate Producer Control Chart Procedure, all gradation test results (percent passing) for each required gradation/production point tested shall be recorded on a control chart within one working day of sampling. The control chart/s for any gradation in the program must therefore have each required sieve represented on the chart.

The gradation control charts are to be readily accessible at the source and/or approved laboratory and available for inspection upon request by the Aggregate Inspector or a representative of the Department. Computer-maintained charts shall be printed and displayed once per week or at the request of the Department. Control charts are the property of the Department and shall not be removed or altered in any manner. The Aggregate Inspector shall check the control charts on a regular basis.

The “Illinois Specification 201 Aggregate Gradation Sample Size Table & Quality Control Sieves” document from the “Manual of Test Procedures for Materials” designates the required sieves for coarse and fine aggregate gradations.

9.1 Definitions

9.1.1 **Average**: The sum of a series of test results or measurements divided by the number of values or measurements included in the sum, also, known as the arithmetic mean.

9.1.2 **Check Samples**: Samples taken for a specific purpose, other than required by Table 1. This information may be used to verify an observation or conclusion, or as a means of confirmation of corrective action, other than required by Table 1. Such samples are permitted under any circumstances except to replace samples required by Table 1.

Aggregate Producer Control Chart Procedure
(Chapter 9, Aggregate Technician Course Manual)
Appendix A3

Effective: November 1, 1995
Revised: March 1, 2013

9.1.3 **Control Charts**: A visual representation of test results, observations, or measurements arranged in an orderly sequence in respect to time. Control charts provide the means of measuring the effectiveness of process control, detecting lack of control, directing a course of action to restore control, and increased sense of "quality awareness".

9.1.4 **"Master Band" or Control Limits**: Mathematical limits placed on gradations, based on established Master Band limits, which when exceeded initiate action by those responsible for process control, and/or acceptance of aggregate products. These limits may be established on the basis of previous historical experience or by start of production results.

9.1.5 **Sample Testing Frequency**: As per Table 1.

9.1.6 **Table 1**: Table 1 of the current Bureau of Materials and Physical Research's Policy Memorandum, "Aggregate Gradation Control System (AGCS)" found in Manual of Test Procedures for Materials

9.1.7 **Trend**: When two or more points move away from the mid-point target values in either direction (±), thus producing either a steep angled line or three points moving with a gradual angle. This is usually associated with the moving average points but can also be determined from individual test points. Trends are indications that a problem(s) are or will be present if corrective action is not taken.

9.1.8 **"Warning Band" or Moving Average**: The average of 5 consecutive values (sample results) obtained per Table 1 requirements, based on established Warning Band limits. Such values always represent the most recently obtained test results or measurements within the prescribed group of observations. These limits may be established on the basis of previous historical experience or by start of production results.

9.2 **Control Chart Paper / Size**. Control charts for the Gradation Control Program, when created by hand, must be placed on 10 x 10 cross-sectional graph paper measuring 420 mm x 280 mm (16-1/2" x 11") or 216 mm x 280 mm (8-1/2" x 11"). Graph paper, used for this purpose, can be ordered through office supply specialty stores, companies dealing in drafting materials or ordered thru the internet. An example of a control chart is found on the last page of this document.

9.3 **Chart Preparation**. At the top of the control chart, the aggregate product material code and the Master Band target (when known) will be noted.

Lines corresponding to the upper and lower percent-passing Standard Specification limits for each required sieve/gradation shall be drawn horizontally across the graph.

The vertical distance between these lines must accurately represent the difference between the upper and lower limits for each sieve using a vertical scale of one division (square) which will equal one percent (1%) passing on all sieves except the 75-µm (No. 200), see Article 9.3.1.

On the left side of the control chart, the upper and lower specification lines of each sieve shall be connected by a drawn vertical double arrow.

The specification limits for the each sieve, e.g., 45% for upper limit and 15% for lower limit, must be indicated at the top (for upper limit) and bottom (for lower limit) of the arrow. The sieve size, e.g., 4.75 mm (No. 4), shall also be indicated between the limits on the far left side of the chart.

The vertical scale [(1% = 1 division (square) or for 75µm (No. 200), 0.1% = 1 division (square)] shall be noted below each required sieve.

Each test value will be spaced horizontally every 1/2" or 5 horizontal divisions (squares).

9.3.1 The 75-µm (No. 200) sieve, when plotted, shall be plotted for washed tests only.

9.3.2 Master Bands and Warning Bands shall be drawn across the graph for the critical sieve, when required, as defined in Article 9.5.1 herein. Master Band limits, once known, shall be represented by a solid line and the Warning Band limits shall be represented by a broken line.

9.4 **Plotting of Test Values**. The Gradation Control Program allows the producer to run both washed and dry gradation tests. The percent passing results for each different kind of gradation test run shall be plotted on the control chart using specific symbols. All symbols must measure approximately 2.5 mm (1/10") on each side/diameter.

9.4.1 The symbols to be used for each test type are as follows:

Type of Gradation Test	Symbol	
Washed Production	Open Circle	O
Dry Production	Circled X	⊗
Stockpile (can be plotted on separate chart)	Asterisk	*
Moving Average	Open Square	□

9.4.2 In addition to the required symbols, line-types are used to further facilitate proper interpretation of the plotted information. Washed production test results will be connected with a broken line while moving average results are to be connected with a solid line.

9.4.3 The moving average will be calculated and plotted on the last five consecutive washed production test values on each critical sieve and is only plotted when a new washed production test is ran.

The moving average will be started by taking the fifth test value after the start of yearly production, or production restarted after a protracted shutdown, and averaging it with the four preceding test values. Once the moving average is established, the moving average will be calculated and plotted each time a new washed production test value is ran and plotted.

9.4.4 Each individual test result that is ran and plotted shall have the following information located at the bottom of the chart below the respective plotted test result.

- Date the sample was taken (e.g. 07/15/11)
- Time the sample was taken (e.g. 10:15 am)
- Every resample was taken. (An “R” shall be placed under the test result that it represents
- Initials of the Aggregate technician plotting the test result(s)

9.4.5 Stockpile load out test results may be plotted or summarized on a separate control chart, graph, or table. The reporting format may be developed by the Source. The reporting format shall include the information required in this article (sample type, time, and date).

The control limits and deviation from the established Master Band shall be identified.

9.5 **Master Band/Warning Band**. During Start of Production, Master Bands/Warning Bands must be developed and placed on the control chart after five tests or within the first 9,100 metric tons (10,000 tons), whichever occurs first, for each product's critical sieve, when required. Any production or equipment change after development of a Master Band may necessitate the development of a new Master Band.

Historical data from washed production samples may also be used, at the Source's request, to establish Master Band targets. The average, rounded to the nearest whole number, used to establish the Master Band shall be based only on washed production critical sieve test results.

9.5.1 Master Bands/Warning Bands will be drawn plus/minus using the below-listed percentages from a rounded average for each listed coarse aggregate sieve/gradation.

If the critical sieve and the plus/minus percentages for coarse aggregates is not listed, this information will be assigned by the Bureau of Materials and Physical Research on an as-needed basis.

Aggregate Producer Control Chart Procedure
(Chapter 9, Aggregate Technician Course Manual)
Appendix A3

Effective: November 1, 1995
Revised: March 1, 2013

Gradation	Sieve	Master Band (%)	Warning Band (%)
CA/CM 5	25 mm (1")	± 8	± 6
CA/CM 7	12.5 mm (1/2")	± 8	± 6
CA/CM 11	12.5 mm (1/2")	± 8	± 6
CA/CM 13	4.75 mm (No. 4)	± 8	± 6
CA/CM 14	9.5 mm (3/8")	± 8	± 6
CA/CM 16	4.75 mm (No. 4)	± 8	± 6

Sand producers - Refer to Illinois Specification 201 for gradation requirements.

9.5.2 When a production change is made, a vertical line shall be drawn through the Master Band. The change shall be noted on the chart and documented in the Source plant diary.

9.5.3 A Master Band, when established, shall take precedence over the Standard Specification limits set for that sieve/gradation.

9.6 **Test Values at Master Band/Warning Band Limits**. When an individual test value on a Master Band **exceeds** the Master Band limits, the producer must treat that test result as a failure. Article 6.5 of the current Department Policy Memorandum "Aggregate Gradation Control System" (AGCS) shall be enacted. Article 6.5 of the AGCS requires resamples/corrective action be taken in response to the initial failing test.

The situation of the moving average hitting or exceeding a Warning Band is different than a failing individual test and Master Bands. When the moving average **hits or exceeds** the Warning Bands, the Source must decide whether to take corrective action to bring the gradation back within the Warning Bands or to develop a new Master Band.

The Source must notify the District what action was taken.

If a new Master Band is developed, the material shall be stockpiled separately from the previous production.

The development of a new Master Band may necessitate new HMA or PCC mix designs.

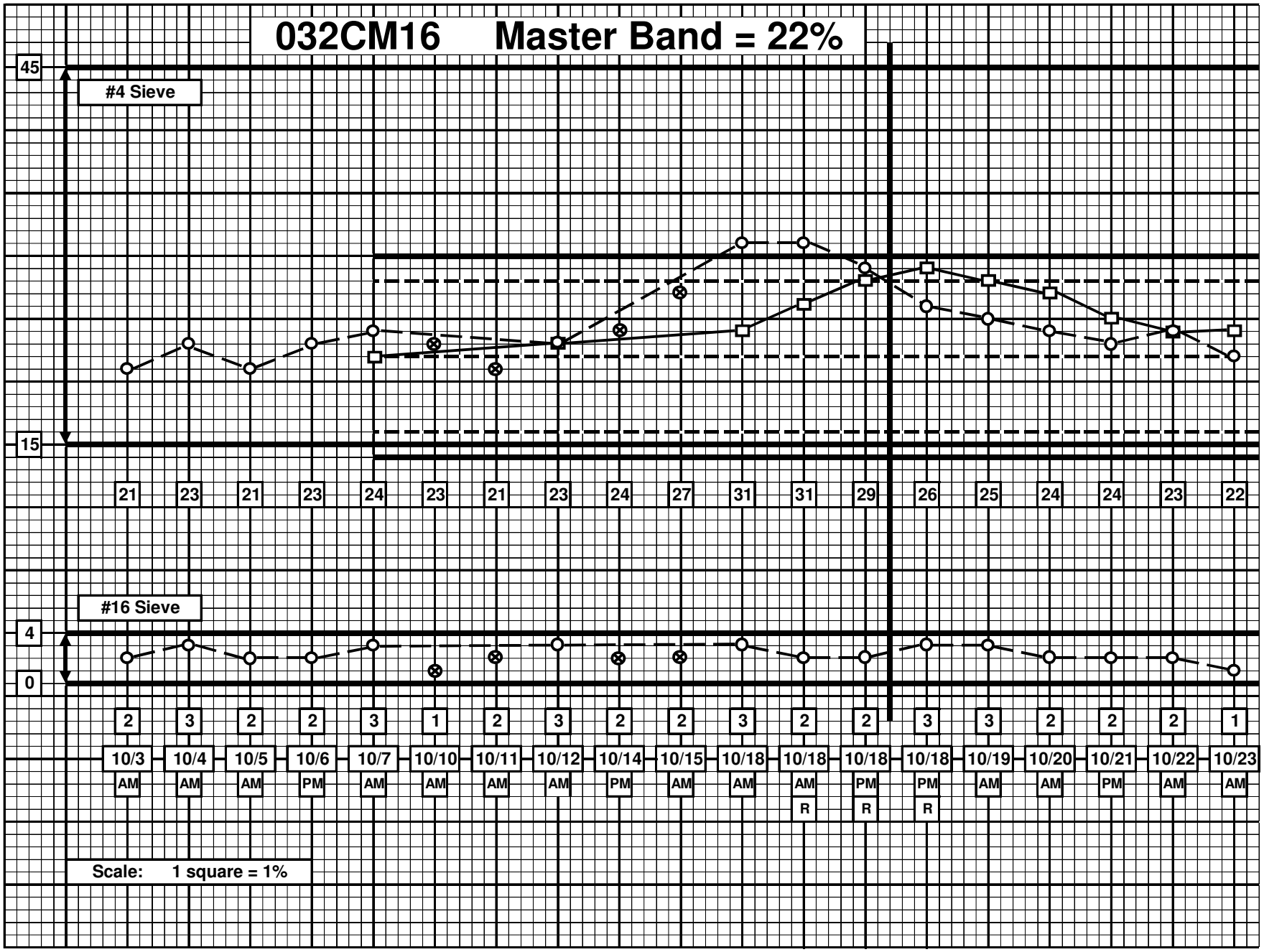
032CM16 Master Band = 22%
45
#4 Sieve
15
21 23 21 23 24 23 21 23 24 27 31 31 29 26 25 24 24 23 22
#16 Sieve
4
0
2 3 2 2 3 1 2 3 2 2 3 2 2 3 3 2 2 2 1
10/3 10/4 10/5 10/6 10/7 10/10 10/11 10/12 10/14 10/15 10/18 10/18 10/18 10/18 10/19 10/20 10/21 10/22 10/23
AM AM AM PM AM AM AM AM PM AM AM AM PM PM AM AM PM AM AM
R R R
Scale: 1 square = 1%

Stockpiling and Handling of Aggregate
(Section 40.2, *Manual for Aggregate Inspection*)
Appendix A4

Effective Date: March 4, 1980
Revised: November 25, 1996

40.2 **Class A, B, and C Quality Coarse Aggregate and Manufacture Sand**

Degradation is of primary concern in handling Classes A, B, and C Quality coarse aggregates (and manufactured sand). Steel-tracked equipment shall not be permitted on stockpiles of Classes A, B, and C Quality (Class I binder and seal/cover coat) aggregate (and manufactured sand). Free-fall from conveyor equipment onto load-out stockpiles shall be held to a maximum of 15 feet. The fall height requirement may be waived if the aggregate source uses a special remixing procedures or device approved by the Bureau of Materials and Physical Research. A comparison of a series of samples taken during the reclaiming or loading-out operation to those taken from the production belt should be made to estimate the effect of the aggregate-handling method of degradation.

Stockpiling and handling methods of Classes A Quality, B Quality, and C Quality (Class I binder and seal/cover coat) aggregate should be designed to hold segregation to a minimum. Coned stockpiles built with stationary or movable conveyor equipment shall not be permitted unless the reclaiming method is such that the loaded-out material will meet the requirements of Article 30.3(b)1. Radial and longitudinal conveyors or stackers shall be kept in motion to reduce coning. Where possible, a spreader chute on the stacker shall be used to broaden or flatten the wedge shape of the pile. Cascading down the sides of the pile should be held to a minimum. Material shall be reclaimed from wedge-shaped piles with an endloader or equipment having similar type loading action working from the end of the pile, with care taken to work the entire width of the pile to remix the material as much as possible. Aggregate-handling methods using tunnel conveyor systems to reclaim aggregate from coned surge piles should be checked for consistency of gradation. Consistency of the gradation should be checked according to the procedures and requirements described in Article 30.3(b) for checking uninspected stockpiles during loading-out procedures. The method of aggregate-handling and stockpiling currently in use at a particular source shall be considered satisfactory provided that the product, when checked at a loading-out point, meets the gradation requirements described in Article 30.3(b)1.

This Page Reserved

Illinois Department of Transportation
QC/QA PROCEDURE
Procedure for Sample Comparison
Appendix A5

Effective Date: November 10, 1997
Revised Date: June 1, 2012

Precision Comparison Table*
State Monitor vs. Producer

	Size Fraction Between Consecutive Sieves (%)†	*Tolerance (%)*
Coarse Aggregate:	0 to 3.0	2
	3.1 to 10.0	3
	10.1 to 20.0	5
	20.1 to 30.0	6
	30.1 to 40.0	7
	40.1 to 50.0	9
Fine Aggregate:	0 to 3.0	1
	3.1 to 10.0	2
	10.1 to 20.0	3
	20.1 to 30.0	4
	30.1 to 40.0	4

* Split Samples only (reported values)
† The State Monitor Sample shall be used to pick tolerances.

Comparison Method

Calculate size fraction between consecutive sieves, including cutter sieves, for both the State Monitor and Producer test results (% Passing).

Show the fraction retained between consecutive sieves for both gradations, the fraction difference on each consecutive sieve grouping between the Monitor and Producer gradation, the applicable tolerance (if coarse aggregate, use coarse aggregate tolerances and, if fine aggregate, use fine aggregate tolerances- If size fraction between consecutive sieves exceeds largest fraction shown, use tolerance for largest size fraction), and whether they are in-tolerance or out-of-tolerance.

If the comparison has no out-of-tolerance fractions, both sample results are considered valid. If and out-of-tolerance situation has been identified, both the producer certified technician and the State inspector shall immediately investigate the splitting procedure, test equipment, test method, and calculations for possible equipment failure or procedure errors. The State Monitor Sample shall always take precedence unless shown to be invalid during investigation.

Example:

CA11	25 mm (1")	19 mm (3/4")	16 mm (5/8")	12.5 mm (1/2")	9.5 mm (3/8")	6.3 mm (1/4")	4.75 mm (#4)	1.18 mm (#16)	75 µm (#200)
Monitor, % Passing	100	87	67	36	13	4	2	1	0.7
Producer, % Passing	100	89	67	44	14	5	3	2	1.3

Comparison Data

Consecutive Sieve Sizes	Monitor Fraction	Producer Fraction	Fraction Difference	Applicable Tolerance	Disposition
25 mm and 19 mm (1" and 3/4")	13	11	2	5	OK
19 mm and 16 mm (3/4" and 5/8")	20	22	2	5	OK
16 mm and 12.5 mm (5/8" and 1/2")	31	23	8	7	Out
12.5 mm and 9.5 mm (1/2" and 3/8")	23	30	7	6	OUT
9.5 mm and 6.3 mm (3/8" and 1/4")	9	9	0	3	OK
6.3 mm and 4.75 mm (1/4" and #4)	2	2	0	2	OK
4.75 mm and 1.18 mm (#4 and #16)	1	1	0	2	OK
1.18 mm and 75 µm (#16 and #200)	0.3	0.7	0.4	2	OK
75 µm and Pan (#200 and Pan)	0.7	1.3	0.6	2	OK

Illinois Department of Transportation

Model Annual Quality Control (QC) Plan for Hot-Mix Asphalt (HMA) Production
Appendix B1

Effective: May 1, 1993
Revised: January 1, 2008

Producer Name: _____

Producer/Supplier No.: _____

Address: _____

City/State/ZIP Code: _____

Phone No.: _____

A. Contractor Responsibilities

This Annual Quality Control (QC) Plan explains how _____ proposes to control the equipment, ingredient materials, and production methods to ensure the specified product is obtained. All requirements of section 1030 of the Standard Specifications and this Annual QC Plan will be adhered to. A Quality Control Addendum shall be completed for each contract and submitted prior to the preconstruction conference.

In joint ventures, where one Contractor is producing the mix and another is responsible for the laydown, the Quality Control Manager, from either party, who is ultimately responsible for the Quality Control should be identified in the Quality Control Addendum.

B. Materials

All materials proposed for use are from approved sources. Material sources are identified below for coarse aggregate, fine aggregate, mineral filler, asphalt binder, prime, anti-strip additive, and release agent. This includes the mix type, Producer/Supplier Number, firm name, and firm location.

	Material	Mix Type	Producer/ Supplier No.	Firm Name	Location
(1)					
(2)					
(3)					
(4)					
(5)					
(6)					
(7)					

	Material	Mix Type	Producer/ Supplier No.	Firm Name	Location
(8)					
(9)					
(10)					

1. Aggregates

The incoming aggregate gradation bands have been developed from the source gradation bands and are attached. Listed below are the contact persons for the aggregate sources furnishing mixture aggregates.

	Name	Firm	Phone Number
Coarse Aggregate			
CA/CM 07/11 (Binder)			
CA/CM 13/16 (Binder)			
CA/CM 13/16 (Surface)			
Fine Aggregate			
FA/FM 01/02			
FA/FM 20/21			

a. Aggregate Stockpile Procedures

All aggregate stockpiles will be built using procedures that will minimize segregation and degradation. All coarse and fine aggregate will be placed in single-layer truck-dumped stockpiles at the mix plant. QC personnel will pay special attention to the loadout, replenishing, and remixing of the aggregate stockpile.

If segregation/degradation becomes a problem, stockpiling procedures will be altered to correct the problem.

b. Incoming Aggregate Gradation Samples

A washed gradation test will be performed for each 500 (tons 450 metric tons) for the first 1,000 tons (900 metric tons) for each aggregate received. Additional gradation tests (every third test will be a washed

gradation test) will be run on the frequency of one test per 2,000 tons (1,800 metric tons) for each aggregate received while the stockpiles are being built or aggregate is being shipped in. Gradation correction factors will be developed from washed gradation test results and applied to all dry gradation results. All aggregate (correction factors applied) will meet the mix plant gradation bands as developed according to the current Department policy, "Development of Gradation Bands on Incoming Aggregate at Mix Plants", before being used in mix production at the mix plant. All incoming aggregate gradation results shall be recorded in the plant diary. If a failing sample is encountered, the following resample procedure will be followed:

(1) Immediately resample the aggregate represented by the failing test.

(2) If the first resample passes, the required frequency will be continued.

(3) If the first resample fails, shipment of the aggregate will be halted, and corrective action will be taken. Corrective action may be rejection of the material, remixing or addition of material by feeder/conveyor system, or any other action approved by the Engineer. The aggregate producer will be notified of the problem. A second resample will be taken immediately after corrective action.

(4) If the second resample passes, the aggregate represented will be used, and aggregate shipment into the plant will be resumed.

(5) If the second resample fails, the aggregate represented will not be used in the QC/QA HMA mixture. The material will be removed from the certified aggregate stockpile.

Each contact person listed above has agreed to immediately provide information on aggregate production changes or any significant variations in aggregate characteristics. These include, but are not limited to, changes in production methods, ledge footage, gradation, quality, specific gravity, and absorption. As gradation information is accumulated during stockpile construction, the aggregate gradations will be compared with the mix design gradation. Significant variations from the design gradation but within the acceptable gradation bands will be discussed with the Engineer. A new mix design will be performed when required by the Engineer.

c. Required Gradation Sample

After mix production has started, all aggregate stockpiles will be checked with a required washed gradation sample on a weekly basis. This testing will be waived if the mixture is classified as a small tonnage item according to the special provision. The test results shall be compared to the mix plant gradation bands for compliance. These gradation results will be noted in the Plant Diary, and a copy will be provided to the District Engineer.

If a weekly required stockpile sample fails, the following resample procedure will be followed:

(1) Immediately resample and test the new stockpile sample.

(2) If the first resample passes, mix production may continue. Several additional check samples will be taken to monitor the stockpile.

(3) If the first resample fails, mix production will be halted, and corrective action will be taken on the stockpile. Corrective action may include rejection of the material, remixing or addition of material by feeder/conveyor system before use in the plant, or any other action approved by the Engineer. The aggregate contact person will be notified of the problem. A second resample will be obtained immediately after corrective action.

(4) If the second resample passes, mix production will begin. Several additional check samples will be taken to monitor the stockpile.

(5) If the second resample fails, the stockpile will not be used in the QC/QA HMA mixture.

Aggregate not meeting the mix plant gradation bands shall not be used in the QC/QA HMA mixtures.

d. Reclaimed Asphalt Pavement (RAP)

RAP will meet the requirements of Sections 1030 of the Standard Specifications and any Special Provision in the contract.

C. Mix Design

Mix designs shall be completed according to the Department's Hot-Mix Asphalt Level III Technician Course. All design data and material samples shall be submitted to the Department for verification a minimum of 30 calendar days prior to production.

D. Quality Control Personnel

All requirements of the Standard Specifications Section 1030, and the items listed in the Department's current "QC Personnel Responsibilities and Duties Checklist" will be met by the QC personnel. All personnel being utilized to run the Quality Control sampling and testing shall have taken and passed the appropriate HMA QC/QA level of training. The QC Manager will assign duties in accordance with the "QC Personnel Responsibilities and Duties Checklist". The QC Manager will assure the listed duties are performed and documented. Additional duties, when necessary, will be assigned and monitored by the QC Manager. Sufficient QC personnel will be provided to run the QC Plan. Additional QC personnel will be added when necessary.

E. Quality Control Laboratory/Equipment

A QC laboratory will be provided and maintained in accordance with the Department's current "Hot-Mix Asphalt QC/QA Laboratory Equipment".

Laboratory equipment meeting the requirements of the Department's current "Hot-Mix Asphalt QC/QA Laboratory Equipment" will be provided and properly maintained at the QC laboratory. In the event of equipment failure, _____ will be the source for backup equipment.

All equipment has been calibrated, and the supporting documentation is on file at the QC laboratory. The QC Laboratory was approved by the Department's Bureau of Materials and Physical Research and by District _____ on _____. The laboratory/equipment will be available for inspection by the Engineer.

F. Mix Plant/Production

Manufacturer _____

Model Number _____

Serial Number _____

Batch Size _____

Tons Per Hour _____

Approved By _____

Approval Date _____

It is our intent to run the day following start-up. Production will not begin until the acceptable nuclear/core correlation is complete, all other required tests are acceptable, the targets are established, and the results are reviewed and agreed to by the Department.

The aggregate feeders will be calibrated prior to the start of production using the aggregates and approximate percentages approved in the Job Mix Formula (JMF). At this time aggregate samples will be taken and compared with the JMF.

At the start of mix production or when adjustments are made to the mix, the QC Manager will give the aggregate proportions to the plant operator, and then, periodically throughout the day, checks will be made of the actual proportions used. This will be especially noted and recorded when a nuclear asphalt and/or a mix sample is taken. The results will be immediately reported to the Resident Engineer and/or other designated Department personnel upon completion of the test.

All scale and sensitivity checks will be performed in accordance with the Hot-Mix Asphalt Level II Technician Course manual. Surge bins may be utilized as part of the overall plant operation. The QC Manager shall contact the Department for approval when material will be stored overnight.

G. Sampling and Testing

All sampling and testing, including all required plant tests, resamples, and additional check tests (when necessary), will be performed in accordance with Department test methods in the time frame required in Section 1030 of the Standard Specifications. The "Radioactive Material License" required for nuclear density and asphalt binder content determinations are attached. District Materials or the Bureau of Materials and Physical Research personnel are welcome to observe all testing by the QC personnel. Time permitting, split samples will be shared with Department

personnel prior to start-up. Coring will be performed using a truck-mounted drill rig or by suitable equipment as approved by the Engineer. An adjustment of 1-1/2% to 2% for minus No. 200 (0.075 mm) material of washed samples vs. dry gradations will be used until a gradation correction factor is established based on preliminary aggregate sampling and testing.

All Department split samples will be stored on site. These samples will be identified with the date and time the material was sampled, Sequence Number, Contract Number, mix plant Producer/Supplier Number, aggregate source Producer/Supplier Number, and the initials of the individual who sampled the material.

H. Placement and Compaction

Only approved equipment will be used in the placement and compaction of the mix in accordance with the Standard Specification requirements.

The QC Manager will verify that all laydown equipment conforms to Department requirements prior to start-up. At the start of laydown, Two Growth Curves will be run on a test strip to determine the suitability of the mix. Mix samples shall be taken and tested from trucks representing material between both Growth Curves. From Growth Curve information, a rolling pattern will be established. Nuclear tests and cores will be taken from the start-up area to verify density and correlation of the nuclear density gauge. Temperatures of the mix will be taken and duly recorded. After the start-up data is approved by the Department and actual production has begun, daily nuclear density tests will be taken at the start of each day's production, along with temperature readings, to verify continued conformance with density requirements. Nuclear density tests according to the Section 1030 will be performed to assure compliance with specified density requirements. Testing will be conducted within the project traffic control, or by use of flaggers, as needed.

Start-up and construction of the test strip is planned to be performed in the morning of the first day. If no problems are encountered, cores for nuclear/core correlation will be taken. The mat will be cooled with ice or dry ice. All tests will be completed for anticipated production the next day.

Should any adverse mix characteristics be observed, the QC Manager shall make mix adjustments as needed to correct the situation.

If segregation should occur, appropriate adjustments will be made in the aggregate stockpiling/loadout, plant production, silo operation, truck loading, or paver operation to alleviate the condition. Only approved truck release agents will be used.

The QC Manager or his representative will check laydown equipment daily for specification compliance and immediately repair or replace nonconforming equipment.

I. Corrective Action

The QC Manager will initiate corrective action immediately according to Section 1030 of the Standard Specifications. Sufficient tests shall be taken to verify the corrective action has worked. Special care will be taken to assure that mix not complying with specifications is not placed on the road.

J. Reporting of Test Results

All test results will be reported daily to the Resident Engineer and other designated personnel as requested by the Department. The data will be reported on the following forms or on forms generated by the Department's current QC/QA software:

MI 504M	Field/Lab Gradations (stockpile gradations)
MI 305	Bituminous Daily Plant Output (front) Plant Settings and Scale Checks (back)
MI 303C	Bituminous Core Density Testing QC/QA
MI 303N	QC Nuclear Density Report
MI 308	Nuclear Asphalt Content and Volumetric Testing
LM-6	Sample Identification (for liquid asphalt)

The completed forms will be forwarded to the District Engineer within three days of test completion.

K. Control Charts

In addition, control charts will be posted at the laboratory and kept updated for the following test parameters in accordance with the Department's current "Hot-Mix Asphalt QC/QA Control Charts/Rounding Test Values".

1. Gradations

   Hot-Bins/Combined Belt

   Percent Passing 1/2-in. (12.5-mm) Sieve

   Percent Passing No. 4 (4.75-mm) Sieve

   Percent Passing No. 8 (2.36-mm) Sieve

   Percent Passing No. 30 (600-µm) Sieve

   Percent Passing No. 200 (75-µm) Sieve

   Ignition Oven

   Total Dust Content

2. Gravities

   a. Bulk specific gravity

   b. Maximum specific gravity

3. Marshall Air Voids

4. Density

5. Asphalt Binder Content

6. Stockpile Gradations

In the event the Total Dust Content is out of tolerance, measures will be taken to correct the problem, which may include adding Positive Dust Control Equipment.

Contractor's Signature _____ Date _____

(Please type or print name) _____ Title _____

This Page Reserved

Illinois Department of Transportation

Model Quality Control (QC) Addendum for Hot-Mix Asphalt (HMA) Production
Appendix B2

Effective: July 1, 1995
Revised: May 1, 2007

Contract No.: _____
Marked Route: _____
Route: _____
Section: _____
County: _____

Contractor: _____
Address: _____
City/State/ZIP Code: _____
Phone No.: _____

A. Contractor Responsibilities

This Quality Control Addendum to the Annual Quality Control Plan further explains how _____ proposes to control the equipment, ingredient materials, and production methods to ensure the specified product is obtained. All requirements in Section 1030, the Annual QC Plan, and this QC Addendum will be adhered to.

In the case of joint ventures, _____ of _____ will be the QC Manager and will be ultimately responsible for the Quality Control on this Contract.

B. Reclaimed Asphalt Pavement (RAP)

RAP will meet the requirements of Sections 406, 1030 and 1102 of the Standard Specifications and any Special Provisions in the Contract. _____ percent of RAP is proposed for use in the _____ course.

Model Quality Control (QC) Addendum for Hot-Mix Asphalt (HMA) Production
Appendix B2
(continued)
Effective: July 1, 1995
Revised: May 1, 2007

C. Mix Design

Mix designs are attached for Department verification.

D. Quality Control Personnel

The project QC Manager will have overall responsibility and authority for Quality Control at both the plant and on the road and will make the necessary adjustments in the mix production, placement, and compaction to assure conformance with the Standard Specifications and Contract Special Provisions.

The QC personnel and/or consulting firm that will be utilized, as well as the backup QC personnel and/or consulting firm, are as follows:

	Name	Level of Training	Firm	Phone Number
(1)				
(2)				
(3)				
(4)				
(5) (backup)				

E. Mix Plant/Production

The mix for this project will be produced by Producer/Supplier No. _____.

F. Control Charts

A copy of the Control Charts will be submitted to the Engineer upon completion of the Contract.

Contractor's Signature _____ Title _____

(Please type or print name) _____ Date _____

Standard Test Method for Correlating
Nuclear Gauge Densities with Core Densities
Appendix B3
Effective: May 1, 2001
Revised: April 1, 2011

A. Scope

1. This method covers the proper procedures for correlating nuclear gauge densities to core densities. Procedures are applicable to both direct transmission and backscatter techniques.

2. The procedure shall be used on all projects containing 3000 tons (2750 metric tons) or more of any hot-mix asphalt mixture. It may also be used on any other project where feasible. The direct transmission method shall be used for thick-lift layers. "Thick-lift" is defined as a layer 6 in. (152.4) mm or greater in compacted thickness.

B. Applicable Documents

1. Illinois Department of Transportation Standard Test Methods

   Illinois-Modified AASHTO T 166, "Bulk Specific Gravity of Compacted Asphalt Mixtures Using Saturated Surface Dry Specimens"

   Illinois-Modified AASHTO T 275, "Bulk Specific Gravity of Compacted Asphalt Mixtures Using Paraffin-Coated Specimens"

2. The density test procedure shall be in accordance with the Department's "Illinois-Modified ASTM D 2950, Standard Test Method for Determination of Density of Bituminous Concrete In-Place by Nuclear Method".

C. Definitions

Test location: The station location used for density testing.

Test site: Individual test site where a single density is determined. Five (5) test sites are located at each test location.

Nuclear Density: The average of 2 or possibly 3 density readings on a given test site.

Core Density: The core density result on a given test site.

Standard Test Method for Correlating
Nuclear Gauge Densities with Core Densities
Appendix B3
(continued)
Effective: May 1, 2001
Revised: April 1, 2011

D. Significance and Use

1. Density results from a nuclear gauge are relative. If an approximation of core density results is required, a correlation must be developed to convert the nuclear density to core density.

2. A correlation developed in accordance with these procedures is applicable only to the specific gauge being correlated, the specific mixture, each specific thickness (direct transmission only), and the specific project upon which it was correlated. A new correlation should be determined within a specific project if there is a significant change in the underlying material.

E. Site Selection

1. The nuclear density tests and cores necessary for nuclear/core correlation shall be obtained during the start-up of each specific mixture for which a density specification is applicable.

2. Three correlation locations shall be selected. Two sites will be located on the two growth curves from the first acceptable test strip. The third location shall be chosen after an acceptable rolling pattern has been established and within the last 100 tons (90 metric tons) of material placed during start-up. The material from the third site shall correspond to the same material from which the second hot-mix sample was taken.

3. If a mixture start-up is not required, two of the three correlation locations shall be in an area containing a growth curve.

F. Procedures for Obtaining Nuclear Readings and Cores

1. Backscatter Mode

a. At each of the three correlation locations, five individual sites shall be chosen and identified as shown in Figure 1.

b. Two nuclear readings shall be taken at each of the 15 individual sites. (See Figure 1.) The gauge shall be rotated 180 degrees between readings at each site. (The two uncorrected readings taken at a specific individual site shall be within 1.5 lbs/ft^3 [23 kg/m^3]). If the two readings do not meet this criterion, one additional reading shall be taken in the desired direction. The nuclear densities are to be recorded on the correlation form (Figure 3).

c. One core in good condition shall be obtained from each of 15 individual sites (Figure 1). Care should be exercised that no additional compaction occurs between the nuclear testing and the coring. The cores shall be tested for density in accordance with Illinois-Modified AASHTO T 166 or T 275. The core densities are to be entered on the correlation form.

For quality assurance purposes, the Department may direct the Contractor to take additional cores adjacent to those above or to submit the quality control cores for Department testing.

d. Extreme care shall be taken in identifying which location each of the density readings represents. The data points have to be paired accurately or the correlation process will be invalid.

2. Direct Transmission Mode

a. At each of the three correlation locations, five individual sites shall be chosen across the mat as shown on Figure 1.

b. A smooth hole in the pavement, slightly larger than the probe, shall be formed to a depth 2 in. (50 mm) greater than the test depth. The probe shall be inserted so that the side of the probe facing the center of the gauge is in intimate contact with the side of the hole. Two nuclear readings shall be taken at each of the 15 individual sites. (See Figures 1 and 2)

The gauge shall be rotated 180 degrees (see Figure 2) around the core area at each site. (The two uncorrected readings taken at a specific individual site shall be within 2.0 lbs/ft^3 [30 kg/m^3] (see Figure 2). If the two readings do not meet this criterion, one additional reading shall be taken in the desired direction. The nuclear densities are to be recorded on the correlation form (Figure 3).

c. One core in good condition shall be obtained from each of the 15 individual sites. (See Figures 1 and 2) The cores shall be obtained from beneath the center of the gauge no closer than 3-1/2 in (87.5 mm) from either access hole. The thickness of the core should represent the thickness of the layer being tested. The layer shall be carefully separated for testing in accordance with Illinois-Modified AASHTO T 166. Care should be exercised that no additional compaction occurs between the nuclear testing and the coring. The cores shall be tested for density in accordance with Illinois-Modified AASHTO T 166 or T 275.

For quality assurance purposes, the Department may direct the Contractor to take additional cores adjacent to those above or to submit the quality control cores for Department testing.

The core densities are to be entered on the correlation form.

d. Extreme care shall be taken in identifying which location each of the density readings represents. The data points have to be paired accurately or the correlation process will be invalid.

G. Mathematical Correlation -- Linear Regression

1. The two (or possibly three) nuclear readings at each individual site shall be entered on the correlation form and then averaged. The core density taken at each individual site shall be entered on the correlation form. After the averaging, there will be 15 paired data points, each pair containing the average nuclear density and core density for each of the 15 individual sites.

2. The paired density values shall be correlated using the Department's linear regression program. (Disks are available from the Bureau of Materials and Physical Research) or an approved and equivalent calculating method.

3. For the purpose of this procedure, standard statistical methods for measuring the "best fit" of a line through a series of 15 paired data points consisting of core density and nuclear density shall be used.

4. It should be recognized that correlations obtained by this or similar procedures may or may not be valid; each attempt should be judged on its merit. In general, a correlation coefficient for each correlation linear regression should be calculated.

5. Correlation coefficients (r) may range from minus 1.0 to plus 1.0. An "r" value greater than 0.715 is considered acceptable.

6. The correlation shall be stated and used in the form: $y = mx + b$

where:
- y = core density
- x = nuclear gauge density
- b = intercept
- m = slope of linear regression ("best fit") line

Standard Test Method for Correlating
Nuclear Gauge Densities with Core Densities
Appendix B3
(continued)
Effective: May 1, 2001
Revised: April 1, 2011

FIRST GROWTH CURVE IS BETWEEN 200 AND 225 METRIC TONS (225 AND 250 TONS), THE SECOND GROWTH CURVE IS BETWEEN 250 AND 275 METRIC TONS (275 AND 300 TONS).

(BACKSCATTER)

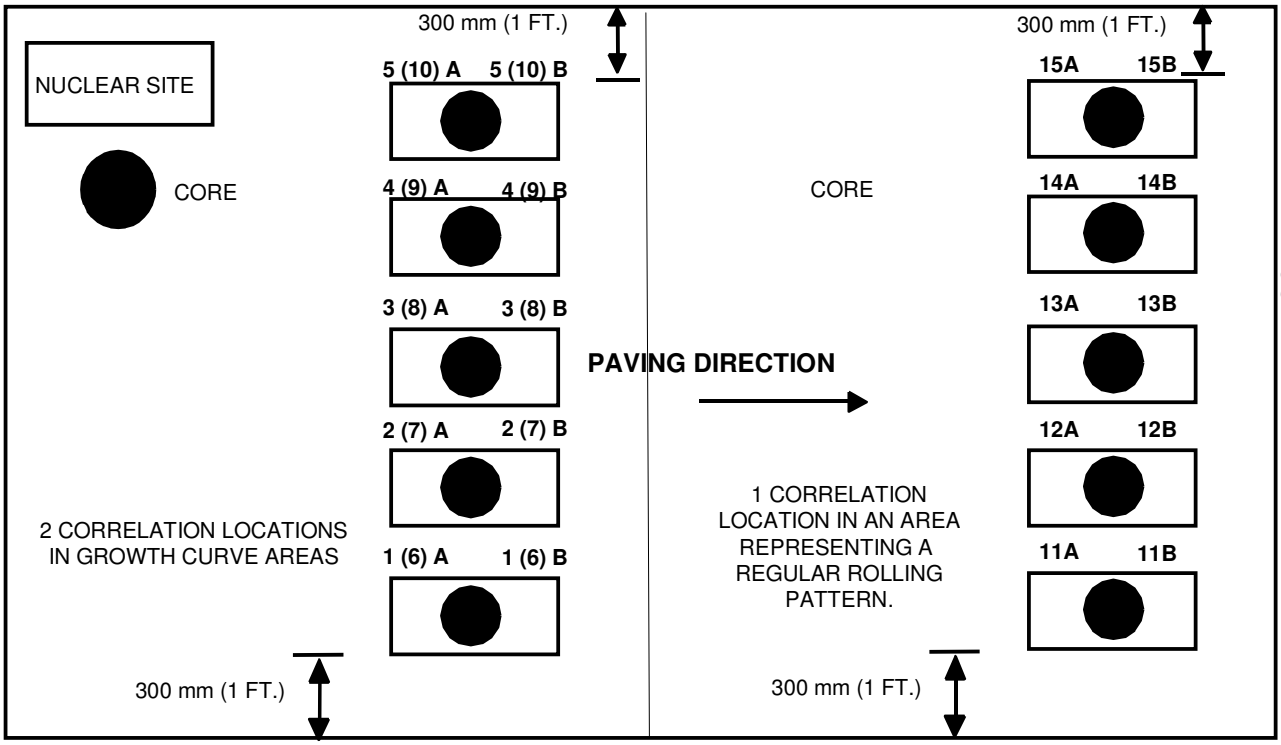

FIGURE 1

2 of 3 sites **1 of 3 sites**

NUCLEAR/CORE CORRELATION TEST LOCATIONS

Standard Test Method for Correlating
Nuclear Gauge Densities with Core Densities
Appendix B3
(continued)
Effective: May 1, 2001
Revised: April 1, 2011

DIRECT TRANSMISSION MODE

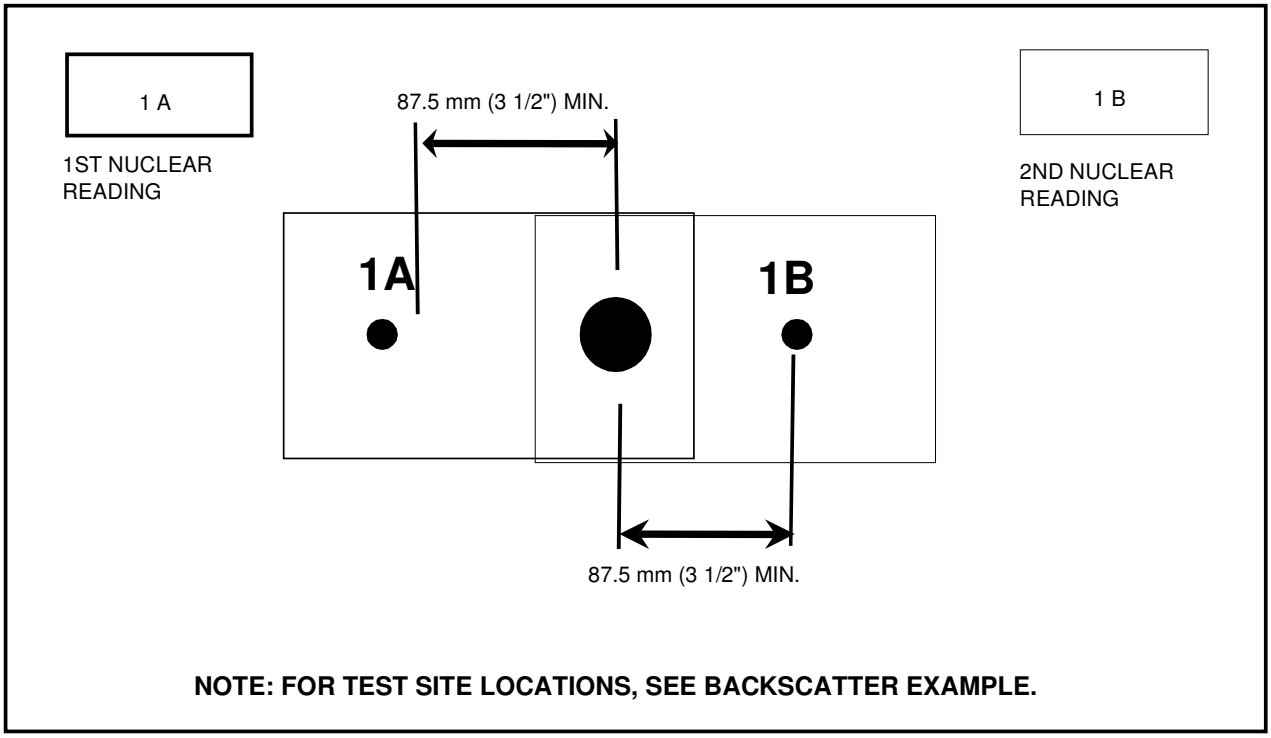

FIGURE 2

NUCLEAR SITE

CORE

DIRECT TRANSMISSION PROBE HOLE

NUCLEAR/CORE CORRELATION

Illinois Department of Transportation

Nuclear / Core Correlation Field Worksheet

Date: _____
Contract: _____ Gauge No.: _____
Job No.: _____ Layer Thickness: _____
Route: _____ Gmm _____
Base Material: ☐ Milled ☐ Binder ☐ Aggregate Other: _____
Mix No.: _____
Mix Code: _____
Use: _____ (surface, 1st lift binder, etc.)

Reading 1	Reading 2	(23 kg/m^3 tol.) **Reading 3** (if applicable)	Average Nuc.	Core Density
STATION: _____				
1A)	1B)	1A) 1B)	1)	1)
2A)	2B)	2A) 2B)	2)	2)
3A)	3B)	3A) 3B)	3)	3)
4A)	4B)	4A) 4B)	4)	4)
5A)	5B)	5A) 5B)	5)	5)
STATION: _____				
6A)	6B)	6A) 6B)	6)	6)
7A)	7B)	7A) 7B)	7)	7)
8A)	8B)	8A) 8B)	8)	8)
9A)	9B)	9A) 9B)	9)	9)
10A)	10B)	10A) 10B)	10)	10)
STATION: _____				
11A)	11B)	11A) 11B)	11)	11)
12A)	12B)	12A) 12B)	12)	12)
13A)	13B)	13A) 13B)	13)	13)
14A)	14B)	14A) 14B)	14)	14)
15A)	15B)	15A) 15B)	15)	15)

This Page Reserved

Hot Mix Asphalt Test Strip Procedures
Appendix B4

Effective: May 1, 1993
Revised: January 1, 2014

For mixtures where the quantity exceeds 3000 tons (2750 metric tons), the Contractor and the Department shall evaluate the mixture to be produced for each contract using a 300 ton test strip. The Contractor shall follow the following procedures for constructing a test strip.

A. Contractor/Department Test Strip Team

A team of both Contractor and Department personnel shall construct a test strip and evaluate mix produced at the plant.

The test strip team may consist of the following, as necessary:

1. Resident Engineer
2. District Construction Supervising Field Engineer, or representative
3. District Materials Mixtures Control Engineer, or representative
4. Contractor's QC Manager, required
5. Contractor's Density Tester
6. Bureau of Materials and Physical Research representative when requested
7. Bureau of Construction representative when requested

B. Communications

The Contractor shall advise the team members of the anticipated start time of production for the mix. The QC Manager shall direct the activities of the test strip team. A Department-appointed representative from the test strip team will act as spokesperson for the Department.

C. Acceptance Criteria

1. Mix Design and Plant Proportioning - The mix design shall be approved by the Department prior to the test strip. Target values shall be provided by the Contractor and will be approved by the Department prior to constructing the test strip.

2. Evaluation of Growth Curves - Mixtures which exhibit density potential less than or greater than the density ranges specified in Article 1030.05(d)(4) shall be considered to have a potential density problem which is normally sufficient cause for mix adjustment.

   If an adjustment has been made, the Engineer may require an additional test strip be constructed and evaluated. This information shall then be compared to the AJMF and required design criteria for acceptance.

3. Evaluation of Required Plant Tests - If the results of the required plant tests exceed the JMF target value control limits, the Contractor shall make allowable mix adjustments/plant changes, resample, and retest. If the Engineer determines additional adjustments to the mix will not produce acceptable results, a new mix design may be required.

D. Test Strip Method

The Contractor shall produce 300 tons (275 metric tons) of mix for the test strip. The test strip will be included in the cost of the mix and will not be paid for separately since the Contractor may continue production, at their own risk, after the test strip has been completed.

The procedures listed below shall be followed to construct a test strip.

a. Location of Test Strip - The test strip shall be located on a relatively flat portion of the roadway. Descending/ascending grades or ramps should be avoided.

b. Constructing the Test Strip - After the Contractor has produced and placed approximately 225 to 250 tons (200 to 225 metric tons) of mix, paving shall cease and a growth curve shall be constructed. After completion of the first growth curve, paving shall resume for the remaining 50 to 75 tons (45 to 70 metric tons), and the second growth curve shall be constructed within this area. The Contractor shall use normal rolling procedures for all portions of the test strip except for the growth curve areas which shall be compacted solely with a vibratory roller as directed by the QC Manager.

c. Required Plant Tests - A set of mixture samples shall be taken at such a time as to represent the mixture in between the two growth curve trucks.

The mixture sampled to represent the test strip shall also include material sufficient for the Department to conduct a Hamburg Wheel test according to Illinois modified AASHTO T 324.

E. Compaction Requirements

1. Compaction Equipment - The Contractor shall provide a vibratory roller meeting the requirements of Article 1101.01(g) of the Standard Specifications. It shall be the responsibility of the test strip team to verify specification compliance before commencement of growth curve construction. An appropriate amplitude shall be selected on the basis of roller weight and mat thickness to achieve maximum density. The vibratory roller speed shall be balanced with frequency so as to provide compaction at a rate of not less than 10 impacts per 1 ft. (300 mm).

2. Compaction Temperature - In order to make an accurate analysis of the density potential of the mixture, the temperature of the mixture on the pavement at the beginning of the growth curve shall not be less than 280 °F (140 °C).

3. Compaction and Testing - The Contractor shall direct the roller speed and number of passes required to obtain a completed growth curve. The nuclear gauge shall be placed near the center of the hot mat and the position marked for future reference. With the bottom of the nuclear gauge and source rod clean, a 1-minute nuclear reading (without mineral filler) shall be taken after each pass of the roller. Rolling shall continue until a growth curve can be plotted, the maximum density determined, and three consecutive passes show no appreciable increase in density or evident destruction of the mat.

4. Final Testing - A core shall be taken and will be secured by the Department from each growth curve to represent the density of the in-place mixture. Additional random cores may be required as determined by the Engineer.

F. Nuclear/Core Correlation

A correlation of core and nuclear gauge test results may be performed on-site as defined in the Department's "Standard Test Method for Correlating Nuclear Gauge Densities with Core Densities". All correlation locations should be cooled with ice or dry ice so that cores can be taken as soon as possible. Three locations should be selected. Two sites should be located on the two growth curves from the first acceptable test strip. The third location should be in an area corresponding to the second set of mixture samples taken at the plant. This correlation should be completed at the same time by the Contractor prior to the next day's production. Smoothness of the test strip shall be to the satisfaction of the Engineer.

H. Documentation

All test strips, required plant tests, and rolling pattern information (including growth curves) will be tabulated by the Contractor with a copy provided to each team member and the original retained in the project files.

This Page Reserved

Hot-Mix Asphalt QC/QA
QC Personnel Responsibilities and Duties Checklist
Appendix B5

Effective: May 1, 1993
Revised: May 1, 2007

The following checklists detail the required minimum duties of Contractor Quality Control (QC) personnel. The QC Manager has overall responsibility to ensure that the listed duties are performed and documented. The QC Manager shall not perform sampling and/or testing except in emergency situations or in any other situation approved by the Engineer. Additional duties, as necessary, may be required to control the quality of production and placement of the Hot-Mix Asphalt (HMA) mixtures. A Level II Technician may be used to perform any Level I Technician duties.

Note: Testing frequency denoted as "P" = "Prior to Start-up" and as "D" = "Daily".

A. Level I Technician

1. Checklist

a. Perform incoming aggregate gradations before start-up time. (PD) ___

b. Ensure lab equipment is on hand and in working order. (PD) ___

c. Run moisture samples daily (drum only). (PD) ___

d. Determine random sampling times one day in advance and inform the QC Manager and the Engineer of the sampling times. (D) ___

e. Take required samples when required using proper procedures. (D) ___

f. Split required sample and save the Department split; use proper identification. ___

g. Run required tests as soon as possible using proper QC/QA procedures. ___

h. Take resamples as required. ___

i. Plot all random and resample results on control charts as soon as test results are available. ___

j. Take check samples when necessary. (D) ___

k. Contact QC Manager immediately when tests fail or any time problems occur. (D) ___

l. Test cores for Nuclear/Core Correlation (after Start-up). ___

2. Required Tests. The minimum test frequency shall be according to Section 1030 of the Standard Specifications. However, additional tests may be required by the Engineer.

   a. Stockpiles
      (washed gradations minimum one per week for each material used) ___

   b. Moisture samples (drum only) ___

   c. Gradations - Belt, Cold-feed, Hot-bin, etc. ___

   d. Nuclear Asphalt Content ___

   e. G_{mb} ___

   f. G_{mm} ___

B. QC Manager and/or Level II Technician Checklist

1. Prior to Mix Production (Preliminary Inspection)

   a. Check for the approved sources of the materials:

      (1) Aggregates — ensure it is from Certified Source ___

      (2) Mineral filler/flyash ___

      (3) Asphalt binder (See d. below.) ___

      (4) Other additives ___

   b. Check the aggregate stockpiling and handling procedures:

      (1) Observe stockpiling procedures to ensure they are built correctly. ___

      (2) Discuss loadout and sampling procedures with endloader operator. ___

      (3) Sample aggregate stockpiles, in conjunction with District inspectors, and submit for Mix Designs. ___

   c. Check the gradation of the aggregates:

      (1) Obtain average gradation of each aggregate (including Master Bands) from the aggregate source. ___

(2) Compare aggregate source information to stockpile samples at the mix plant and with the design gradation. ___

d. Check asphalt binder:

(1) Source ___

(2) Grade ___

(3) Incoming temperatures ___

(4) Specific Gravity (drum only) ___

e. Verify that the laboratory and laboratory equipment have been inspected and approved by the Department and are in good working order. ___

f. Review Hot-Mix Asphalt Level I and Level II Technician Course manuals.

2. <u>Prior to Production/During Start-Up/During Production</u>

a. Check the mix plant for the following:

(1) Approval and calibration (P) ___

(2) Asphalt binder storage (PD) ___

(3) Stockpiles (PD) ___

(a) correct loadout ___

(b) place in proper cold-feed bins ___

(4) Cold-feed bins or bulkheads and feeders (PD) ___

(5) Dust collecting systems (D) ___

(6) Screens and screening requirements (P) ___

(7) Hot-bin sampler (P) and hot-bin overflow (PD) ___

(8) Weigh belt 6-minute check (drum only) (D) ___

(9) Temperature recorders and thermometers (PD) ___

(10) Mixing timers (batch plant only) and pugmill dam gate (continuous plants) (PD) ___

(11) Surge and storage bins (PD) ___

(12) Platform scales or suspended weigh hopper (PD) ___

(13) Anti-strip additive system (when required) (PD) ___

(14) Ticket printer (P) ___

(15) Computer and control systems (PD) ___

b. Check trucks for the following
(QC Manager may assign these duties to a Level I Technician):

(1) Truck bed release agents (PD) ___

(2) Insulation (D) ___

(3) Tarps (D) ___

(4) Clean beds (D) ___

c. Coordinate any start-up per Department guidelines
(QC Manager only). ___

d. Monitor sampling and testing procedures, density test, and laydown operations; contact man from aggregate producer
(QC Manager only). ___

e. Check the mixtures for the following:

(1) Gradation test performed and
bin percentages determined before start-up (P) ___

(2) Correct Job Mix Formula is being used (P) ___

(3) Moisture check (drum only) (PD) ___

(4) Temperature (D) ___

(5) Coating and segregation (D) ___

(6) Additives (D) ___

f. Laydown operation (QC Manager only) —
Monitor the following field checks:

(1) Check for obvious defects in truck
(segregation, uncoated, temperature, etc.) (D) ___

(2) Monitor paver operations
(equipment, laydown procedures, etc.) (PD) ___

(3) Rollers and operations
(equipment, pattern, procedure, etc.) (PD) ___

(4) Mix characteristics on road (appearance, mat temperature, etc.) (D) ___

(5) Monitor densities as required (D) ___

g. Monitor all test results and make any adjustments necessary (QC Manager only) (D). ___

h. Perform scale checks (minimum one per week per scale). Follow procedure in Construction Manual Documentation Section. ___

i. Prepare and store samples for the District laboratory as required. (D) ___

j. Ensure following records are kept and reports are submitted in a timely manner as required (QC Manager only): (D)

(1) Daily plant output ___

(2) Field gradation ___

(3) Density ___

(4) Marshall (stability and flow when required) ___

(5) Control charts ___

(6) Additives ___

(7) Scale checks ___

(8) Plant diary ___

C. Level I Technician, Level II Technician, and Quality Control Manager Duties

1. Material Source

It is necessary to identify the source of the ingredients to ensure that they have been inspected and the correct quality of aggregate, grade of asphalt binder, and anti-strip additive are being used in the specified mix. Sources shall be verified.

2. Aggregate Quality

The Level II Technician may confirm the quality of the aggregate by requesting current quality information from the District Materials office.

3. Stockpiling

Sites for stockpiles shall be grubbed and cleaned prior to storing the aggregates.

Separate stockpiles shall be provided for the various sources and kinds of aggregates. Stockpiles shall be separated to prevent intermingling at the base (width of endloader bucket). If partitions are used, they shall be of sufficient heights to prevent intermingling. Aggregates for HMA mixtures shall be handled, in and out of the stockpiles, in such a manner that will prevent contamination and degradation.

Coarse aggregate stockpiles shall be built in layers not exceeding 1.5 m (5 ft) in height and each layer shall be completely in place before the next layer is started. A stockpile may be expanded by again starting the expansion from the ground and building layers as before. End-dumping over the sides will not be permitted. Use of steel track equipment on Class B Quality, Class C Quality and all blast furnace slag aggregate stockpiles shall not be permitted where degradation is detected. When loading out of stockpiles, vertical faces shall be limited to reasonable heights to eliminate segregation due to tumbling. Segregation or degradation due to improper stockpiling or loading out of stockpiles shall be just cause for rejecting the material.

4. Gradations

The Level II Technician shall obtain the average gradations as well as the Master Bands from the aggregate source. He/She shall run the required gradation's test frequency on incoming aggregate as required in Section 1030 of the Standard Specifications.

5. Asphalt Binder

a. Incoming Asphalt Binder: The Level II Technician shall periodically check the grade and temperature of asphalt binder as received at the plant. If the asphalt binder is shipped by truck, the driver should have in his possession a numbered ticket showing the name and location of the refinery, the name of the material, date shipped, loading temperature, quantity, specific gravity or weight/L (weight/gal), and the number of the tank from which the asphalt was loaded. It is the responsibility of the refinery to load trucks only from tanks that have been tested and approved by the Department. If shipment is made by rail, a tag usually will be found on the top of the dome of the tank car indicating that it has been sampled at the refinery.

b. Asphalt Binder Storage: The Level II Technician shall check the temperature of the asphalt binder in storage. The temperatures shall be maintained in accordance with the Standard Specifications. The Level II Technician should be aware of the grade of asphalt binder in each storage tank. Asphalt binders of different sources and grades shall not be intermixed in storage, and the tanks shall be identified.

6. Testing Equipment

Care of the laboratory testing equipment is the responsibility of the Level I Technician. Equipment shall be furnished by the Contractor or Consultant, kept clean, and kept in good working condition. At the start of the project, the technician shall check that all equipment required to be furnished is available and in good condition. Acceptance and, ultimately, performance of a mixture may be dependent on the accuracy of the field tests. Defective equipment could result in erroneous, as well as untimely, results.

7. Asphalt Plant

a. Plant Approval: Plant must be approved and calibrated prior to production each construction season. The QC Manager shall review this information. If it is not available or current, the District Hot-Mix Asphalt Supervisor shall be notified.

b. Cold Aggregate Bins: The cold aggregate bins or bulkheads shall be checked for aggregate intermingling. Each bin or compartment in a bin shall contain only one source and type of aggregate. The bins should be checked each day to ensure the charging of the compartments remains the same as it was for previous operations for the same mix. The QC Manager shall notify the state inspector of changes in aggregate source and gradation and/or gate settings.

c. Dust Collector: The Level II Technician shall check that the dust from the primary collector is returned to the boot of the hot elevator by a metering system as required by Article 1102.01(a)(5) of the Standard Specifications. This metering system should be such as to require a few adjustments in maintaining a uniform rate of collected dust returned to the hot elevator. The primary dust-feed shall occur only when aggregate is being discharged from the drier.

Plants having dry secondary collectors shall return this material to a storage silo or the mineral filler bin if it will meet the requirements of the mineral filler specifications (Section 1011 of the Standard Specifications).

d. Screens: Samples from the hot-bins shall be inspected for contamination. An excess of coarse aggregate in the sand bin or sand in the coarse aggregate bins may indicate broken or clogged screens and/or a hole between the bins. The screens shall separate aggregate into sizes to produce a uniform gradation. If fluctuations in gradation occur, a change in screen size and/or aggregate flow rate may be required. Article 1102.01(b)(8) of the Standard Specifications shall be applied.

e. Hot-Bins: The Level II Technician is to ensure that each hot-bin overflow pipe is working to prevent back-up of material into other compartments or bins. An overflow or sudden shortage of material in a bin may indicate a broken or clogged screen, a change in feeding rate, or a change in gradation of the aggregate being used. Overflow pipes shall not be discharged into the hot elevator.

f. Temperature Recording Device: The temperature recording devices shall be checked for compliance with Article 1102.01(a)(7) of the Standard Specifications. A new chart shall be used each day.

g. Timers: The timers used for recycling the wet and dry mixing times for a batch plant shall be checked and set at the required mixing times. On continuous plants, the pugmill dam gate shall be in the raised position. The required times are in the appropriate articles of the Standard Specifications.

h. Batching: The Level II Technician shall observe the batching operation to ensure the approved batch weights are being met. Manually operated batch plants shall have markers on the scales to indicate the approved batch weight of each ingredient material. Automatic batching plants shall have posted near the scales the approved weights per bin. On continuous plants, the gate openings shall be checked for the proper setting. It is recommended that batch counters and/or ton counters be set at "zero" or that initial and final readings be taken and recorded each day.

i. Surge and Storage Bins: When a surge and storage bin are used, approval and scale calibration information should be available. They shall be inspected for compliance with Article 1102.01(a)(6) of the Standard Specifications. Trucks shall be loaded in such a manner as to minimize segregation.

j. The platform and/or suspended weigh hopper scale shall be checked for proper zero. The scales shall be cleaned off before starting each day.

k. The anti-strip additive system calibration shall be checked and the proper flow rate determined.

l. The weigh ticket printer shall be checked for information required by the specifications.

m. The computer and/or control system shall be checked to see if the correct percentages of materials have been entered. The automatic printer for the computer of the drier drum should be turned on and working.

8. Trucks

A Level I Technician, under the direct supervision of the QC Manager or the Level II Technician, shall inspect the trucks used to transport the HMA mix. The technician shall see that each truck is provided with a cover and is properly insulated, if specified, before it is permitted to be used in the transportation of the mixture from the plant to the job. The truck bed shall be observed for foreign material before the bed is lubricated. He/She shall observe the spraying of the inside of the trucks with a release agent and shall see that no pools of release agent remain in the truck beds before loading.

9. Mixture Inspection

The Level II Technician shall inspect the mixture at the plant, which includes observing the weighing of the materials; checking the temperature of the mixture; and visually inspecting for coating of the aggregates, segregation, and moisture in the mixture. The Level I Technician shall sample and determine the gradation of the hot-bins and/or cold-feeds and the proper amount of asphalt binder being used to ensure conformity to the mix formula. The Level II Technician shall also verify and document the addition rates of the anti-strip additives.

In addition, the Level I Technician shall perform the required core density tests and, when required, extraction tests at the field laboratory.

The QC Manager shall furnish the Contractor with the mixing formulas which have been established for a specific combination of sources of ingredients. The formulas shall state the percentage of aggregate for each sieve fraction and the percentage of asphalt binder. These formulas are to be used in proportioning the ingredient materials for HMA mixtures within the specified tolerances. Changes in the mix formulas are to be made only by the QC Manager.

It is important that the QC Manager observe the laying and compaction of the mixture.

Mixture variations are noticeable in the completed work, and variations that are not apparent in the mixture at the plant sometimes show up as defects in the texture and uniformity of the surface. Flushing of the mixture is a defect that can be detected only on the road.

It is the duty of both the Level I and Level II Technicians to establish and maintain an open line of communications.

Timely and appropriate actions can be instituted by early detection of defects or mixture variations.

10. Scale Checks

When measurement of mixtures is on the basis of weights obtained from batch weights or automatic printers, occasional scale checks shall be made by weighing full truckloads of the mixture on an approved platform scale at the plant site or on a commercial scale approved by the Engineer. The frequency and procedure for the check tests are described in the "Documentation" section of the [Bureau of] *Construction Manual*. The tests will be performed by the Level II Technician and reported on the "Daily Plant Output Report" and/or form BC 2367.

11. Samples

The Level I Technician shall take check samples of the mixture in addition to the required samples. He/She must also store split samples in a dry storage area for the Engineer. Section 1030 of the Standard Specifications discusses sampling procedures and sampling frequency.

12. Reports

The Quality Control Manager is responsible for completion of a "Daily Plant Output Report" (MI 305) for each day of production for each type of mix. Other reports, when required, are "Sample Identification" (LM-6), and Scale Checks.

Hot-Mix Asphalt QC/QA Initial Daily Plant and Random Samples
Appendix B6

Effective: May 1, 1993
Revised: May 1, 2007

Initial Daily Plant and Random Samples shall be obtained at the frequency specified in Section 1030 of the Standard Specifications.

A. Truck samples shall be taken of the mixture for testing. Two sampling platforms (one on each side of the truck) shall be provided for sampling of the mix. In order to obtain a representative sample of the entire truck, an equal amount of material shall be taken from each quarter point around the circumference of each pile in the truck to obtain a composite sample weighing approximately 150 lbs (70 kg). All truck samples shall be obtained by using a "D"-handled, square-ended shovel with built-up sides and back (1 to 1½ in. [25 to 37.5 mm]).

B. After the sample has been obtained, it shall be divided into two approximately equal size (split) samples by the use of an approved mechanical sample splitter. One of the split samples shall be placed in a Department-approved sample container provided by the Contractor and shall be properly identified for use by the Department. These split samples shall be retained by the Contractor for assurance testing by the Engineer and may be disposed of only with the permission of the Engineer. The split samples shall be stored in a dry, protected location. The remaining split will be used for those tests described in Section 1030 of the Standard Specifications.

C. Starting with the first day of production (excluding start-up), the initial daily required plant sample shall be obtained between the first ½ to 1½ hours of daily production of a particular mixture. These daily plant test samples shall be tested for, but not limited to, the following:

1. Bulk Specific Gravity, G_{mb} (d)
2. Maximum Theoretical Gravity, G_{mm} (D)
3. Asphalt Binder Content
4. Aggregate Gradations
   a. Combined Belt
   b. Individual Cold-Feeds
   c. Hot-Bins
5. Total Dust Content of Mix from Ignition Oven or Solvent Extraction

D. The second daily required plant sample shall be taken at a randomly selected time within the third quarter of the anticipated production day using the "Random Numbers" table on the following page or the Department's QC/QA computer software. For HMA mixtures classified as “All Other” the Contractor shall use the anticipated full production day when

calculating the random sampling time. The anticipated full production day shall be the time from a ½ hour after production begins to a ½ hour before production ends. The following procedure shall be used to calculate the second daily required plant sampling time.

1. Multiply the quarter production day (in minutes) by a three digit random number, expressed as a decimal, selected from the "Random Numbers" table or the Department's QC/QA computer software.

2. The number obtained (rounded to a whole number) shall be added to the starting time of the third quarter. The time represented by this addition is the randomly selected sampling time.

   If the plant is producing HMA mixtures intermittently, the samples shall be taken as close to the determined time as possible.

Hot-Mix Asphalt QC/QA Initial Daily Plant and Random Samples
Appendix B6
(continued)
Effective: May 1, 1993
Revised: May 1, 2007

RANDOM NUMBERS

0.576	0.730	0.430	0.754	0.271	0.870	0.732	0.721	0.998	0.239
0.892	0.948	0.858	0.025	0.935	0.114	0.153	0.508	0.749	0.291
0.669	0.726	0.501	0.402	0.231	0.505	0.009	0.420	0.517	0.858
0.609	0.482	0.809	0.140	0.396	0.025	0.937	0.301	0.253	0.761
0.971	0.824	0.902	0.470	0.997	0.392	0.892	0.957	0.040	0.463
0.053	0.899	0.554	0.627	0.427	0.760	0.470	0.040	0.904	0.993
0.810	0.159	0.225	0.163	0.549	0.405	0.285	0.542	0.231	0.919
0.081	0.277	0.035	0.039	0.860	0.507	0.081	0.538	0.986	0.501
0.982	0.468	0.334	0.921	0.690	0.806	0.879	0.414	0.106	0.031
0.095	0.801	0.576	0.417	0.251	0.884	0.522	0.235	0.389	0.222
0.509	0.025	0.794	0.850	0.917	0.887	0.751	0.608	0.698	0.683
0.371	0.059	0.164	0.838	0.289	0.169	0.569	0.977	0.796	0.996
0.165	0.996	0.356	0.375	0.654	0.979	0.815	0.592	0.348	0.743
0.477	0.535	0.137	0.155	0.767	0.187	0.579	0.787	0.358	0.595
0.788	0.101	0.434	0.638	0.021	0.894	0.324	0.871	0.698	0.539
0.566	0.815	0.622	0.548	0.947	0.169	0.817	0.472	0.864	0.466
0.901	0.342	0.873	0.964	0.942	0.985	0.123	0.086	0.335	0.212
0.470	0.682	0.412	0.064	0.150	0.962	0.925	0.355	0.909	0.019
0.068	0.242	0.777	0.356	0.195	0.313	0.396	0.460	0.740	0.247
0.874	0.420	0.127	0.284	0.448	0.215	0.833	0.652	0.701	0.326
0.897	0.877	0.209	0.862	0.428	0.117	0.100	0.259	0.425	0.284
0.876	0.969	0.109	0.843	0.759	0.239	0.890	0.317	0.428	0.802
0.190	0.696	0.757	0.283	0.777	0.491	0.523	0.665	0.919	0.146
0.341	0.688	0.587	0.908	0.865	0.333	0.928	0.404	0.892	0.696
0.846	0.355	0.831	0.281	0.945	0.364	0.673	0.305	0.195	0.887
0.882	0.227	0.552	0.077	0.454	0.731	0.716	0.265	0.058	0.075
0.464	0.658	0.629	0.269	0.069	0.998	0.917	0.217	0.220	0.659
0.123	0.791	0.503	0.447	0.659	0.463	0.994	0.307	0.631	0.422
0.116	0.120	0.721	0.137	0.263	0.176	0.798	0.879	0.432	0.391
0.836	0.206	0.914	0.574	0.870	0.390	0.104	0.755	0.082	0.939
0.636	0.195	0.614	0.486	0.629	0.663	0.619	0.007	0.296	0.456
0.630	0.673	0.665	0.666	0.399	0.592	0.441	0.649	0.270	0.612
0.804	0.112	0.331	0.606	0.551	0.928	0.830	0.841	0.702	0.183
0.360	0.193	0.181	0.399	0.564	0.772	0.890	0.062	0.919	0.875
0.183	0.651	0.157	0.150	0.800	0.875	0.205	0.446	0.648	0.685

Note: Always select a new set of numbers in a systematic manner, either horizontally or vertically. Once used, the set should be crossed out.

This Page Reserved

Determination of Random Density Locations
Appendix B7

Effective: May 1, 1993
Revised: April 1, 2011

Density tests (core or nuclear gauge) shall be performed at randomly located sites based on the frequency specified in Section 1030 of the Standard Specifications. The random test locations shall be determined as follows:

A. The beginning station number shall be established daily and the estimated paving distance computed for the day's production. The total distance to be paved shall then be subdivided into units representing 2640-ft. (800-m) or 1320-ft. (400-m) frequency.

B. The length of each unit shall be multiplied by the three digit random number expressed as a decimal from the "Random Numbers" table on the following page or from the Department's QC/QA computer software. The number obtained shall be added to the beginning station number for the unit to determine the center of the test site location.

C. This process shall be repeated for the subsequent units for the day's production using a new random number for each location.

D. The partial unit at the end of each day shall be considered a whole unit, and the test location shall be determined by multiplying the partial distance by the next available random number.

Determination of Random Density Locations
Appendix B7
(continued)
Effective: May 1, 1993
Revised: April 1, 2011

RANDOM NUMBERS

0.576	0.730	0.430	0.754	0.271	0.870	0.732	0.721	0.998	0.239
0.892	0.948	0.858	0.025	0.935	0.114	0.153	0.508	0.749	0.291
0.669	0.726	0.501	0.402	0.231	0.505	0.009	0.420	0.517	0.858
0.609	0.482	0.809	0.140	0.396	0.025	0.937	0.301	0.253	0.761
0.971	0.824	0.902	0.470	0.997	0.392	0.892	0.957	0.040	0.463
0.053	0.899	0.554	0.627	0.427	0.760	0.470	0.040	0.904	0.993
0.810	0.159	0.225	0.163	0.549	0.405	0.285	0.542	0.231	0.919
0.081	0.277	0.035	0.039	0.860	0.507	0.081	0.538	0.986	0.501
0.982	0.468	0.334	0.921	0.690	0.806	0.879	0.414	0.106	0.031
0.095	0.801	0.576	0.417	0.251	0.884	0.522	0.235	0.389	0.222
0.509	0.025	0.794	0.850	0.917	0.887	0.751	0.608	0.698	0.683
0.371	0.059	0.164	0.838	0.289	0.169	0.569	0.977	0.796	0.996
0.165	0.996	0.356	0.375	0.654	0.979	0.815	0.592	0.348	0.743
0.477	0.535	0.137	0.155	0.767	0.187	0.579	0.787	0.358	0.595
0.788	0.101	0.434	0.638	0.021	0.894	0.324	0.871	0.698	0.539
0.566	0.815	0.622	0.548	0.947	0.169	0.817	0.472	0.864	0.466
0.901	0.342	0.873	0.964	0.942	0.985	0.123	0.086	0.335	0.212
0.470	0.682	0.412	0.064	0.150	0.962	0.925	0.355	0.909	0.019
0.068	0.242	0.777	0.356	0.195	0.313	0.396	0.460	0.740	0.247
0.874	0.420	0.127	0.284	0.448	0.215	0.833	0.652	0.701	0.326
0.897	0.877	0.209	0.862	0.428	0.117	0.100	0.259	0.425	0.284
0.876	0.969	0.109	0.843	0.759	0.239	0.890	0.317	0.428	0.802
0.190	0.696	0.757	0.283	0.777	0.491	0.523	0.665	0.919	0.146
0.341	0.688	0.587	0.908	0.865	0.333	0.928	0.404	0.892	0.696
0.846	0.355	0.831	0.281	0.945	0.364	0.673	0.305	0.195	0.887
0.882	0.227	0.552	0.077	0.454	0.731	0.716	0.265	0.058	0.075
0.464	0.658	0.629	0.269	0.069	0.998	0.917	0.217	0.220	0.659
0.123	0.791	0.503	0.447	0.659	0.463	0.994	0.307	0.631	0.422
0.116	0.120	0.721	0.137	0.263	0.176	0.798	0.879	0.432	0.391
0.836	0.206	0.914	0.574	0.870	0.390	0.104	0.755	0.082	0.939
0.636	0.195	0.614	0.486	0.629	0.663	0.619	0.007	0.296	0.456
0.630	0.673	0.665	0.666	0.399	0.592	0.441	0.649	0.270	0.612
0.804	0.112	0.331	0.606	0.551	0.928	0.830	0.841	0.702	0.183
0.360	0.193	0.181	0.399	0.564	0.772	0.890	0.062	0.919	0.875
0.183	0.651	0.157	0.150	0.800	0.875	0.205	0.446	0.648	0.685

Note: Always select a new set of numbers in a systematic manner, either horizontally or vertically. Once used, the set should be crossed out.

Hot-Mix Asphalt QC/QA Control Charts / Rounding Test Values
Appendix B8

Effective: May 1, 1993
Revised: January 1, 2008

A. Scope

1. All required Contractor test results, including resample tests and mixture start-up, described in Article 1030.05(g) of the Standard Specification shall be split samples and plotted on Control Charts. (No check tests shall be plotted on these Control Charts.) In addition, the Engineer's "assurance" test results shall also be displayed. The minimum frequency of such tests shall be according to Section 1030 of the Standard Specifications.

2. Control Charts shall be maintained by the Contractor in the field laboratory. Contractor test results shall be recorded within 24 hours of sampling. The Engineer shall be provided access to the location of the Control Charts at all times.

B. General Procedures

1. Control Charts shall be computer-printed or plotted in ink on standard cross-section paper (10 divisions per 1 in. [25 mm]). The vertical scale used shall conform to the following requirements in respect to rounded values of:

   Gradation - 1% per 2.5 divisions (1 in [25 mm] = 4.0%).

   Air Voids, Field VMA, Minus No. 200 (Minus 75-µm), Field Density - 0.1% per division (1 in. [25 mm] = 1.0%).

   Asphalt Binder Content — 0.1% per 5 divisions (1 in. [25 mm] = 0.2%).

   Specific Gravity (Bulk or Maximum Theoretical) - 0.001 per division (1 in. [25 mm] = 0.01).

2. The horizontal scale shall be arranged such that each randomly selected test value obtained is plotted at ½ in. (12.5-mm) intervals. (See Figure 1.)

C. Symbols and Control Limits

1. Individual test values shall be represented on Control Charts by open circles centered on the correct test value except that washed ignition oven gradations shall be denoted by a solid circle. Moving average values shall be represented by open squares centered on the correct value. State assurance test values

shall be represented by solid triangles for washed ignition gradations and by open triangles for dry gradations. All symbols shall be 0.1 in. (2.5 mm) in their largest dimension.

2. Individual test values shall be connected by dashed lines. Department assurance test values shall not be connected with any other point. Moving average data points shall be connected by solid lines.

3. Target values shall be represented on Control Charts by horizontal solid lines. Appropriate control limits (solid lines) for each control parameter shall extend horizontally across the chart and be identified with an appropriate solid symbol corresponding to the type of test it represents, i.e., individual or moving average.

D. Individual Test Values and Moving Average

1. Moving averages are applicable to all values except Department assurance split samples. The moving average is the average of four consecutive test values and is determined by starting with the fourth test value and averaging it with the three preceding test values. Plotting the average thereafter will be done in a similar manner starting with the test value just completed. Rounding procedures for the moving average are the same as used for the individual test values.

   The moving average for minus 200 (minus 75 µm) for HMA production control shall include both washed ignition oven gradation and adjusted dry gradation individual results. When a given sublot includes both washed ignition and dry gradation test results for the minus 200 (minus 75 µm), only the washed ignition shall be used in the moving average.

   The moving average for G_{mm} of a new mixture shall be established initially with the results from the start-up and shall include more tests in the moving average as they occur until the moving average of four is established. Unless otherwise specified by the Engineer, the moving average for G_{mm} of a previously placed mixture shall begin with the most recent moving average of four and shall be averaged with subsequent test results.

2. At the bottom of the chart under the line on which the individual test data is plotted, the following information shall be listed:

   a. Date and specific time (include a.m. or p.m.) of sampling.

   b. Lot Number.

   c. Test Sequence.

   d. Quantity of material represented (produced since previous test).

   e. Initials of person performing the test.

   f. Use "(rs)" to denote resample.

E. Mixture Start-Up Test Values

1. Test values obtained during start-up and the Job Mix Formula (JMF) adjustment period shall be placed at the beginning of the Control Charts. Once all these required tests have been completed and their values recorded, two vertical double black lines shall be drawn on the graph ½ in. (12.5 mm) apart. This constitutes the field verification process for the mixture.

2. At the completion of the field verification, production under QC/QA shall be initiated with the agreed upon targets and appropriate limits being placed on the graph. Individual required plant test results shall be recorded from this point on with a moving average being established at the completion of the fourth test.

F. Adjusting Targets

1. If the adjustments in gradation or asphalt binder content are required in order to maintain proper voids, they shall be made according to Section 1030.06 of the Standard Specifications and shall be appropriately documented on the Control Charts.

2. When an adjustment to the Target value is made, two vertical double black lines shall be drawn on the graph ½ in. (12.5 mm) apart. The new target value plus upper and lower control values will be placed on the chart. The moving average will continue as though the adjustment had not taken place.

G. Resample Test Values

The Contractor resample tests for a failed individual test shall be the only biased process control test placed on the Control Chart. It shall be denoted by a circle (closed for washed gradations and open for all other tests) with its value placed on the vertical line which corresponds to the time or lot from which the resample was taken. A circle shall be drawn around this value and the failed test value which the resample represents. Both the failed test value and the resample test value shall be used as individual points in determining moving averages.

H. Rounding Test Values

1. The intent of rounding is to limit the number of digits in an observed or calculated value to those considered significant for the purpose of determining conformance with specification limits.

   If improperly applied, rounding may contribute to loss of precision and result in increased risk to either the Department or Contractor.

   The following are the appropriate significant digits to which test values are to be rounded for parameters described in the Section 1030:

Test	Significant Digit
Gradation (% Passing);	Nearest whole percent (no decimal)
Field Density: Air Voids; Minus No. 200 (Minus 75-µm); Asphalt Binder Content	Nearest one-tenth percent (0.1%)
Bulk Gravity, G_{mb}; Maximum Gravity, G_{mm}	Nearest one-thousandth (0.001)

   Rounding of test results shall be according to Illinois-Modified ASTM E 29, "Standard Practice for Using Significant Digits in Test Data to Determine Conformance with Specifications", located in this manual.

Hot-Mix Asphalt Mixture Design Verification Procedure
Appendix B9

Effective Date: January 1, 2002
Revised: January 1, 2013

1.0 GENERAL

Contractors shall provide all hot-mix asphalt (HMA) mix designs for use on Department contracts. All mix designs must provide mixture meeting Department mix criteria. The Department will provide current aggregate bulk specific gravity. The Engineer reserves the right to be present for the sampling of all aggregates for mix designs. Once verified, a mix design will be approved for use for a three year period. After three years, the mix design shall be redesigned if necessary, and re-verified.

2.0 PURPOSE

Establish a verification procedure to evaluate Contractor mix designs for use on Department contracts. This procedure also allows for comparison of the test accuracy and precision between laboratories.

3.0 REQUIRED DESIGN DATA/MATERIAL SAMPLES

3.1 The Contractor shall provide a mix design prepared by a Hot-Mix Asphalt Level III Technician in accordance with the Department's "Hot-Mix Asphalt Design Procedure" in the current *Hot-Mix Asphalt Level III Technician Course* manual. All testing shall be performed by Hot-Mix Asphalt Level I Technicians or higher. The mix design shall be submitted with the following design data:

A. The material name, material code number, source name, source Producer/Supplier Number, and source location shall be provided for all materials used in the mix design.

B. The Contractor shall provide the average mix plant stockpile gradations and aggregate blend percentages used to design the mix. Each of the individual aggregate gradations used in the Contractor design shall be an average of a minimum of 5 (five) stockpile gradations from existing stockpiles at the plant. Adjusted average aggregate source gradations (stockpile gradations preferred) may be substituted if aggregate has not been shipped to the mix plant. The adjustment shall be based on the amount of aggregate degradation during shipment to, and handling at, the mix plant. A design using gradation information not comparing to mix plant or aggregate source gradations shall be considered unacceptable.

C. The Contractor shall provide a summary of design test data and optimum design data utilizing a design package with the same output format as CARE-AC.

(1) Design sheet. The design shall contain a minimum of four design points, two of which shall bracket the optimum design asphalt binder (AB) content by at least ± 0.5%. Under remarks include: short-term aging time, dust correction factor, compaction temperature, and mixing temperature.

(2) Design summary data sheet (in CARE-AC format).

(3) Actual graph paper from the stability machine and actual G_{mm} lab worksheets (original copy unless otherwise specified).

(4) Batching worksheet.

(5) Dust correction worksheet (include an example packet, such as the one from the Level III manual).

(6) Batching sources sheet.

(7) Mix design graphs (full page).

(a) Gradation (45 power curve).

(b) Asphalt Binder Content vs. G_{mb}/G_{mm}.

(c) Asphalt Binder Content vs. VMA.

(d) Asphalt Binder Content vs. Air Voids.

(e) Asphalt Binder Content vs. Voids Filled with Asphalt (VFA).

(8) Recalculations and/or retested points (e.g., recalculated G_{mm}'s using average G_{se}).

(9) TSR worksheet.

The forms used shall be the Department's computer spreadsheet from CARE-AC, or other forms having the same format as CARE-AC.

3.2 The Contractor shall provide samples of blended aggregate, asphalt binder, and additives which represent the materials in the mix design. The representative samples shall be identified and submitted as follows:

A. Aggregate (including mineral filler/collected dust) -- Dried, split into the individual sizes specified for the Batching Worksheet as stated in the current *Hot-Mix Asphalt Level III Technician Course* manual, and then blended to the chosen gradation. The amount submitted shall be two (2) 10,000-gram samples of dry aggregate, with an additional 2,000 grams for gradation testing if requested by the District. All material shall be bagged in plastic bags or other airtight containers. Each container shall be identified with the source names, source locations, source Producer/Supplier Numbers, material codes, sample location, and sample date.

B. Asphalt Binder -- A minimum of 4 qts (4,000 mL). Identified with source name, source location, source Producer/Supplier Number, material code, sample location, and sample date.

C. Additive(s) -- The same additive(s) as used in the Contractor's design, identified by the additive source name, source location, brand name or number, material code, sample location, sample date, additive MSDS, the manufacturer's recommended dosage rate, and the rate used in the design <u>if different</u> than the manufacturer's recommended dosage rate. <u>NOTE</u>: Prior to submitting the additive(s), the Contractor shall contact the District Materials Engineer for the required sample size.

3.3 All design data and material samples shall be submitted to the Department a minimum of 30 calendar days prior to production.

3.4 The Contractor shall certify in writing that all materials submitted for mix design verification meet Department requirements and represent the materials to be used during mix production.

3.5 Previously verified mix designs shall be resubmitted for verifications as per Section 4.1 herein.

4.0 DEPARTMENT VERIFICATION

4.1 At the option of the Department, mix designs may be verified using either Method A or Method B listed below:

Method A. Department verification for mix designs will include review of all mix design data (including all aggregate field gradations) submitted by the Contractor, mixing the component materials submitted by the Contractor, and testing of the asphalt mixture. Verification testing will include volumetric, TSR and Hamburg Wheel on a mixture made from the individual materials submitted by the Contractor. The mixture at the optimum design asphalt binder content shall meet the mix design criteria for the following: VMA, VFA, G_{mb}, G_{mm}, Pa (voids), Tensile Strengths, TSR values, and Hamburg Wheel.

Method B. Department verification for mix designs will be based on 1) a review of all mix design data (including all aggregate field gradations) submitted by the Contractor and 2) Department verification testing for IL Modified AASHTO T 283 and IL Modified AASHTO T 324. IL Modified AASHTO T 324 will not be required for "All Other" HMA mixes.

4.2 The Contractor mix design data and Department verification testing shall meet the mix design criteria in the Standard Specifications, any Special Provision in the Contract, and the following tolerances (where applicable):

Volumetric Testing	**Tolerance**
G_{se} (effective SG of combined aggregates)	± 0.014
G_{mb}	± 0.020
G_{mm}	± 0.014
Air Voids	± 0.5 %

Gradation	**Tolerance**
12.5 mm (1/2 in)	± 3.0
4.75 mm (No. 4)	± 2.0
2.36 mm (No. 8)	± 2.0
600 µm (No. 30)	± 1.0
75 µm (No. 200)	± 0.5
Pb (Asphalt Binder Content)	± 0.15

All aggregate field gradations submitted by the Contractor will be compared to previous mix plant and/or Aggregate Gradation Control System gradations for validity.

4.3 The Department will notify the Contractor in writing within 30 calendar days of receiving the design data/materials as to the acceptability of the submitted Contractor mix design. If the verification fails, the 30-calendar-day time for the Department to notify the Contractor starts over. Acceptable designs may be used in Department contracts, provided the design is reproducible in the mix plant.

This Page Reserved

Illinois Test Procedure 401
Storage of Hot-Mix Asphalt Mixtures
Appendix B10

Effective: January 1, 2002
Revised: May 1, 2007

1.0 SCOPE

1.1 The purpose of this procedure is to evaluate the effect of 20-hour storage on hot-mix asphalt.

1.2 Article 1102.01(a)(10) of the IDOT *Standard Specifications for Road and Bridge Construction* allows for the storage of hot-mix asphalt in surge systems designed and operated to prevent segregation and loss of temperature. The specification allows for a maximum retention of eight hours. Longer retention times must be approved in writing by the Engineer.

2.0 REFERENCED DOCUMENTS

2.1 Illinois Modified AASHTO T 164, Method A or E

2.2 Illinois Modified AASHTO T 170

3.0 EQUIPMENT

3.1 One-quart (1-liter) and 1-gallon (4-liter) metal containers with lids for sample storage and transportation.

4.0 PROCEDURE

4.1 The Bureau of Materials and Physical Research will evaluate the effect of additional storage time on the mixture. The Engineer will direct the Contractor to sample the mixture based on the following procedure. The Engineer reserves the right to witness the sampling.

4.2 The Contractor shall provide a minimum of 20 hours of uninterrupted storage of the mixture to be sampled.

4.3 The bin must be filled with a binder mixture at a time mutually agreed upon by the Contractor and Engineer.

4.4 A 1-quart (1-liter) sample of the asphalt binder shall be taken at this time.

4.5 A 1-gallon (4-liter) sample of the mixture shall be taken at this time.

4.6 An additional 1-gallon (4-liter) mixture sample will be taken 20 hours after initial storage.

4.7 Samples shall be drawn from the silo by dumping the mixture into a truck and sampling from the truck. All samples should be large enough to fill the metal container.

4.8 Each sample container shall be sealed immediately and marked with the producer's or supplier's name and number, plant location, date, time, type of mixture, mixture temperature, and asphalt binder source and grade.

Note: If the sample container does not stay sealed, the container may be cooled with the sample before sealing.

4.9 The samples should be immediately forwarded to the Bureau of Materials and Physical Research for evaluation.

4.10 Asphalt binder recovered from the mixture samples will be tested for the effects of increased storage time on viscosity.

Grade	Viscosity at 60 °C, Pascal Seconds, Maximum
PG 64-28	125
PG 58-28	250
PG 58-22	500
PG 64-22	1000
PG 70-22 (neat)	2000

4.11 The test results of the initial mixture sample shall be used for informational purposes only.

4.12 Approval will be based on the test results from the final mixture sample.

4.13 Test Method A or E of Illinois Modified AASHTO T 164, "Quantitative Extraction of Bitumen from Bituminous Paving Mixtures," shall be used to extract asphalt binder from mixture samples.

4.14 The procedure for recovery of the extracted asphalt shall be Illinois Modified AASHTO T 170, "Recovery of Asphalt from Solution by Abson Method."

Calibration of Equipment for Asphalt Binder Content Determination (Nuclear Gauge and Ignition Oven) Appendix B11

Effective Date: January 1, 2002
Revised: May 1, 2007

A. Scope

The Contractor may be required to use the nuclear gauge or ignition oven to determine the asphalt binder content of a Hot-Mix Asphalt (HMA) mixture. To ensure consistency, both the Contractor and the Department shall calibrate the device(s) in the same manner using the same mixture.

B. Purpose

To provide consistent calibration between the Contractor's and Department's asphalt binder content determination equipment. The procedure also applies to any third-party gauges used for Quality Control, Quality Assurance, Independent Assurance, or Acceptance testing.

C. Nuclear Asphalt Content Gauge

1. Department Verification

   a. All HMA mixture designs shall be verified in accordance with the Department's "Hot-Mix Asphalt Design Verification Procedure" before submitting materials for the nuclear asphalt binder content gauge calibration.

   b. The Contractor shall provide a mix design prepared by a Hot-Mix Asphalt Level III Technician in accordance with the Department's current Hot-Mix Asphalt Level III Technician Course manual, "Hot-Mix Asphalt Design Procedure". All testing shall be performed by Hot-Mix Asphalt Level I Technicians or higher.

   c. At the option of the Department, previously verified mixtures may be accepted by reviewing the data listed in Section 11 of Illinois Modified AASHTO T 287, and provided a dry aggregate standard count is within ± 1.0% of the calibration aggregate count as outlined in Section 10.2 of Illinois Modified AASHTO T 287.

   d. Testing shall include, at the option of the Engineer, one or both of the following test procedures:

      (1) The District has the option of witnessing the Contractor's calibration procedures as outlined in Section 7 of Illinois Modified AASHTO T 287.

Calibration of Equipment for Asphalt Binder Content Determination
(Nuclear Gauge and Ignition Oven)
Appendix B11
(continued)

Effective Date: January 1, 2002
Revised: May 1, 2007

After the Contractor has calibrated his/her nuclear asphalt binder content gauge, the calibration pans shall be covered with plastic bags (to prevent the introduction of moisture) and given to the Department's representative.

The Department will calibrate its nuclear asphalt binder content gauge, with the same calibration pans as the Contractor used.

(2) Prior to calibrating the nuclear asphalt binder content gauge, the Contractor shall submit the following to the District office at least 2 weeks prior to production:

- 3 empty nuclear asphalt pans
- 22 lbs (10 kg) of the HMA mixture at the design optimum asphalt binder content
- 22 lbs (10 kg) of the HMA mixture at 1% below the optimum asphalt binder content
- 22 lbs (10 kg) of the HMA mixture at 1% above the optimum asphalt binder content
- The actual blended aggregate, including the pan, used to determine the dry aggregate standard count

The Engineer may split out approximately 16.5-lb (7500-g) and/or 4.4-lb (2000-g) samples out of the 22 lb (10 kg) mixture samples. The 16.5-lb (7500-g) samples shall be used in the calibration pans for both the Department and the Contractor. The 4.4-lb (2000-g) samples may be used by the Department to run extractions on the samples for verification. The extraction results shall be within the following tolerances:

Calibration of Equipment for Asphalt Binder Content Determination
(Nuclear Gauge and Ignition Oven)
Appendix B11
(continued)

Effective Date: January 1, 2002
Revised: May 1, 2007

Sieve	Tolerance
12.5 mm (1/2 in.)	± 3.0
4.75 mm (No. 4)	± 2.0
2.36 mm (No. 8)	± 1.5
600 µm (No. 30)	± 1.0
75 µm (No. 200)	± 0.5
Pb (Asphalt Content)	± 0.15

If the extraction results lie outside the above tolerances Contractor shall be required to resubmit new material as outlined above for this procedure.

The Engineer will calibrate the Department's nuclear asphalt binder content gauges using the pans and mixture the Contractor submitted. The calibration pans will be covered with plastic bags (to prevent the introduction of moisture) and sent to the Contractor. This shall be done for all 3 points.

The Contractor shall calibrate his/her nuclear asphalt binder content gauges, with the same calibrations pans as the Department used, within 24 hours of receiving the samples from the Department.

2. Calibration

a. The Contractor shall calibrate his/her nuclear asphalt binder content gauge only after the Department has verified the calibration samples as outlined above in Section C.1.

b. The Contractor shall retain the calibration pans. These pans shall be covered with plastic bags and stored in a dry, secure place.

c. Calibration shall be done after a mixture is designed, an approved Job Mix Formula (JMF) is established, and the mixture has been verified by the Department. Calibration before the mixture is designed is not allowed since this would not necessarily allow for the proper range of asphalt binder content, and the job mix gradation would not be known. The calibration temperature for both the dry aggregate count and the HMA mixture count shall be within ± 10 °F (± 6 °C) of each other and be within the range of 180 to 290 °F (± 82 to 143 °C).

Calibration of Equipment for Asphalt Binder Content Determination
(Nuclear Gauge and Ignition Oven)
Appendix B11
(continued)

Effective Date: January 1, 2002
Revised: May 1, 2007

D. Ignition Oven

1. Department Verification

a. All HMA mixture designs shall be verified in accordance with the Department's "Hot-Mix Asphalt Design Verification Procedure" before submitting materials for the ignition oven calibration.

b. The Contractor shall provide a mix design prepared by an Hot-Mix Asphalt Level III Technician in accordance with the Department's current Hot-Mix Asphalt Level III Technician Course Manual, "Hot-Mix Asphalt Design Procedure". All testing shall be performed by Hot-Mix Asphalt Level I Technicians or higher who have also successfully completed the Superpave Field Control Course.

c. Calibrations shall consist of, at the option of the Engineer, one or both of the following procedures:

(1) The District has the option to witness the mixing and burning of the calibration sample. The Contractor shall mix enough mixture to provide the Department with calibration samples.

(2) The Contractor shall submit the following to the District office at least two weeks prior to production:

- Four individually batched, combined aggregate samples meeting the JMF. Each sample shall meet the minimum mass requirements listed in Section 5.6 of Illinois Modified AASHTO T308.

- 1 L (1 qt.) asphalt binder

Two samples will be used to calibrate the District's ignition oven. If the difference between the measured asphalt binder content of the two samples exceeds 0.15%, the tests will be repeated using the two remaining samples.

Hot-Mix Asphalt Mix Design
Procedure for Dust Correction Factor Determination
Appendix B12

Effective: January 1, 1998
Revised: May 1, 2007

A dust correction factor (DCF) shall be determined and applied to each new mix design using the procedure listed below. This procedure will be used to supplement the Hot-Mix Asphalt Level III Technician Course manual to account for additional minus No. 200 (minus 75-µm) material present as a result of batching with unwashed aggregates.

It is important to note the Adjusted Blend Percentages are temporary percentages used during laboratory batching only. The original Blend Percentages on the "Design Summary Sheet" remain unchanged.

Note: When adjusting percentages to equal 100, the largest percentage should be adjusted accordingly.

A) Virgin Mix Design

1. Batch a combined aggregate sample matching the job mix formula (JMF). Test sample size shall be determined using Illinois Specification 201 and based on the nominal maximum size of the largest coarse aggregate.

2. Perform a washed test on the combined aggregate sample using Illinois Modified AASHTO T 11.

3. The DCF shall be the difference between the percent passing the No. 200 (75-µm) sieve of the washed test and the JMF.

4. Determine the mineral filler reduction (MFR) by dividing the DCF by the percent (in decimal form) mineral filler gradation passing the No. 200 (75-µm) sieve.

5. Subtract the MFR from the blend percentage of mineral filler.

6. Adjust the remaining blend percentages to sum to 100 by dividing each by the quantity (1 - MFR).

Hot-Mix Asphalt Mix Design
Procedure for Dust Correction Factor Determination
Appendix B12
(continued)
Effective: January 1, 1998
Revised: May 1, 2007

Example

Bituminous Mixture Design

Design Number:------->		50BITEXPL
Lab preparing the design?(PP,PL,IL ect.)		IDOT
Producer Name & Number-->	1111-01 Example Company Inc Somewhere 1, IL	
Material Code Number--->	17552	BITCONC BCS 1 B TONS

Agg No.	#1	#2	#3	#4	#5	#6	ASPHALT
Size	032CMM11	032CMM16	038FAM20	037FAM01	004MFM01		10124M
Source (PROD#)	51972-02	51972-02	51230-06	51790-04	51052-04		
(NAME)	MAT SER	MAT SER	MIDWEST	CONICK	LIVINGSTON		2260-01
(LOC)							EMLSCOAT
Aggregate Blend	38.0	35.0	14.5	10.0	2.5	0.0	100.0

Agg No. Sieve Size	#1	#2	#3	#4	#5	#6	Blend
1	100.0	100.0	100.0	100.0	100.0	100.0	100.0
3/4	88.0	100.0	100.0	100.0	100.0	100.0	95.4
1/2	45.0	100.0	100.0	100.0	100.0	100.0	79.1
3/8	19.0	97.0	100.0	100.0	100.0	100.0	68.2
#4	6.0	29.0	97.0	97.0	100.0	100.0	38.7
#8	2.0	7.0	80.0	85.0	100.0	100.0	25.8
#16	2.0	4.0	50.0	65.0	100.0	100.0	18.4
#30	1.8	3.0	35.0	43.0	100.0	100.0	13.6
#50	1.7	3.0	19.0	16.0	100.0	100.0	8.6
#100	1.5	3.0	10.0	5.0	90.0	100.0	5.8
#200	1.3	1.3	4.0	2.5	88.0	100.0	4.0

Step 1. **Batch a combined aggregate sample meeting the JMF.** Illinois Specification 201 requires a 5000-gram sample when CM11 is present.

Step 2. **Run a washed test using AASHTO T 11.**

Step 3. **Determine the Dust Correction Factor (DCF).** The DCF is the difference in the percent passing the No. 200 (75-µm) sieve between the washed test and the JMF:

	JMF	Washed Test	DCF
No. 200 (75 µm)	4.0%	5.6%	1.6%

Step 4. **Determine the Mineral Filler Reduction (MFR)** by dividing the DCF (%) by the percent (in decimal form) mineral filler gradation passing the No. 200 (75-µm) sieve:

MFR (%) = 1.6 / 0.88 = 1.8%

Step 5. **Determine the adjusted mineral filler blend percentage** by subtracting the MFR (%) from the blend percentage of mineral filler:

2.5% - 1.8% = 0.7%

Step 6. **Adjust the remaining blend percentages to sum to 100** by dividing each by the quantity [1 - **MFR** (in decimal form)]:

	Blend Percentage	**Adjusted Blend Percentage[1]**
032CMM11	38.0	38.7
032CMM16	35.0	35.6
038FAM20	14.5	14.8
037FAM01	10.0	10.2
004MFM01	2.5	0.7
	100.0	100.0

Note 1: It is important to note the Adjusted Blend Percentages are temporary percentages used during laboratory batching only. The original Blend Percentages on the "Design Summary Sheet" remain unchanged.

B) RAP Mix Design

1. Determine the Virgin Aggregate Fraction (VAF). The virgin aggregate fraction is the percentage of virgin aggregate

2. Adjust to the virgin blend percentages by dividing each virgin aggregate by the VAF.

3. Determine the RAP Adjusted JMF (RJMF)

4. Batch the virgin aggregates according to the adjusted blend percentages matching the RJMF. Test sample size shall be determined using Illinois Specification 201 and based on the nominal maximum size of the largest coarse aggregate.

5. Perform a washed test on the combined aggregate sample using Illinois Modified AASHTO T 11.

6. The DCF shall be the difference between the percent passing the No. 200 (75-µm) sieve of the washed test and the RJMF.

7. Determine the mineral filler reduction $(MFR)_{RAP}$ by dividing the DCF by the percent (in decimal form) mineral filler gradation passing the No. 200 (75-µm) sieve.

8. Subtract the MFR_{RAP} from the blend percentage of mineral filler.

9. Adjust the remaining virgin aggregate blend percentages to sum to 100 by dividing each by the quantity $(1 - MFR_{RAP})$.

10. Determine the batching blend percentages with RAP by multiplying the adjusted virgin aggregate blend percentages by the VAF.

RAP Example

			Design Number:---->		50BITWRAP		
			Lab preparing the design?(PP,PL,IL ect.)		IDOT		
Producer Name & Number>		1111-01 Example Company Inc Somewhere 1, IL					
Material Code Number--->		19512R	BITCONC BC N50 19.0R				
	Required!		FA20/21			RAP in #6	
Agg No.	#1	#2	#3	#4	#5	#6	ASPHALT
Size (e.g. 032CAM16)	042CMM11	042CMM16	FINE AGG	037FMM01	004MP01	017CMM16	PG64-22
Source (PROD#)	50572-01	50572-01		50530-02	51052-04	111-01	5627-02
(NAME)	Prairie Materials	Prairie Materials		Prairie Materials	Livingston	Example Co	BPAMOCO
(LOC)	Ashkum	Ashkum		Paxton	Pontiac	Somewhere	Whitting, Ind
					RAP in Mix:	25	
Aggregate Blend	38.3	23.0		13.0	2.0	23.7	100.0

Agg No. Sieve Size	#1	#2	#3	#4	#5	#6	Blend
1	100.0	100.0	100.0	100.0	100.0	100.0	100.0
3/4	79.0	100.0	100.0	100.0	100.0	100.0	92.0
1/2	34.0	100.0	100.0	100.0	100.0	100.0	74.7
3/8	9.0	99.0	100.0	100.0	100.0	97.8	64.4
#4	1.1	29.0	100.0	98.0	100.0	73.4	39.2
#8	1.1	3.0	100.0	89.0	100.0	49.0	26.3
#16	1.1	2.7	100.0	79.0	100.0	37.0	22.1
#30	1.1	2.5	100.0	63.0	100.0	28.0	17.8
#50	1.1	2.3	100.0	23.0	100.0	18.6	10.3
#100	1.1	1.8	100.0	2.0	90.0	12.6	5.9
#200	1.0	1.7	100.0	1.0	85.0	10.2	5.0

Step 1. **Determine the virgin aggregate fraction (VAF).**

$$VAF = \frac{(100 - RAPAgg\%)}{100} \qquad VAF = \frac{(100 - 23.7)}{100}$$

VAF = 0.763

Step 2. **Adjust to the virgin aggregate percentages** by dividing each virgin aggregate by the VAF.

	Initial		virgin agg %	
042CMM11	38.3	(÷ 0.763)	50.3	(added 0.1 sum = 100.0)
042CMM16	23.0	(÷ 0.763)	30.1	
037FMM01	13.0	(÷ 0.763)	17.0	
004MF01	2.0	(÷ 0.763)	2.6	
Sum	100.0		100.0	

Step 3. **Determine the RAP adjusted JMF (RJMF).** Combine gradation using the adjusted virgin aggregate blend percentages.

1	100.0
¾	89.4
½	66.8
3/8	53.9
#4	28.5
#8	19.2
#16	17.4
#30	14.6
#50	7.8
#100	3.8
#200	3.4

Step 4. Batch the virgin aggregates according to the adjusted blend percentages matching the RJMF. Illinois specification 201 requires a 5000-gram sample when CM11 is present.

Step 5. Run a washed test using AASHTO T11.

Step 6. Determine the dust correction factor (DCF). The DCF is the difference between the percent passing the No. 200 (75-µm) sieve of the washed test and the RJMF.

	Washed	RJMF	DCF
No. 200 (75-µm)	4.3	3.4	4.3-3.4= 0.9

DCF = 0.9

Step 7. Determine the mineral filler reduction $(MFR)_{RAP}$. The $(MFR)_{RAP}$ is determined by dividing the DCF by the percent (in decimal form) mineral filler gradation passing the No. 200 (75-µm) sieve.

$$MFR_{RAP} = \frac{0.9}{0.85} = 1.1\%$$

Step 8. Determine the mineral filler blend percentage by subtracting the MFR_{RAP} from the blend percentage of mineral filler.

2.6 – 1.1 = 1.5%

Step 9. Adjust the remaining blend percentages to sum to 100% by dividing each by the quantity [1-MFR_{RAP} (in decimal form)]:

$1 - MFR_{RAP} = 1 - 0.011 = 0.989$

	Virgin %		Adj Virgin Blend%
042CMM11	50.3	(÷ 0.989)	50.9
042CMM16	30.1	(÷ 0.989)	30.4
037FMM01	17.0	(÷ 0.989)	17.2
004MF01	2.6	(from step 8)	1.5
Sum	100.0		100.0

Step 10. Determine the batching blend percentages with RAP by multiplying the adjusted virgin blend % by the VAF.

VAF = 0.763

	Adjusted Virgin %		Batching Blend %	
042CMM11	50.9	(x 0.763)	38.9	(added 0.1 sum = 100.0)
042CMM16	30.4	(x 0.763)	23.2	
037FMM01	17.2	(x 0.763)	13.1	
004MF01	1.5	(x 0.763)	1.1	
		RAPAgg	23.7	
		Sum	100.0	

This Page Reserved

Illinois Test Procedure 403
Calibration of the Ignition Oven for the Purpose of Characterizing Reclaimed Asphalt Pavements (RAP)
Appendix B13

Effective Date: January 1, 2002
Revised: May 1, 2007

1.0 GENERAL

1.1 This method covers the calibration of the ignition oven for characterization of reclaimed asphalt pavement (RAP). Correction factors for both gradation and asphalt content are determined by conducting parallel ignition and extraction testing.

2.0 SIGNIFICANCE AND USE

2.1 The ignition oven may be used in place of solvent extractions at the frequency stated in Section 1031 of the Standard Specifications.

2.2 This method may be used only with the approval of the Engineer.

2.3 Each RAP stockpile shall require a separate ignition oven calibration.

2.4 All RAP stockpiles and sampling frequencies shall meet the requirements stated in Section 1031 of the Standard Specifications.

3.0 REFERENCED DOCUMENTS

3.1 AASHTO Standards (as modified by Illinois):

- T 2 Sampling of Aggregates
- T 164 Quantitative Extraction of Bitumen from Bituminous Paving Mixtures
- T 248 Reducing Field Samples of Aggregate to Testing Size
- T 308 Determining the Asphalt Binder Content of Hot-Mix Asphalt (HMA) by the Ignition Method

4.0 PROCEDURE

4.1 Sample the RAP according to AASHTO T 2. Obtain an adequate amount of material to perform a minimum of two solvent extractions and four ignition oven burns. The minimum sample sizes shall be governed by the nominal maximum aggregate size of the mixture defined in Illinois Modified AASHTO T 164 and T 308. Reduce the samples to testing size according to Illinois Modified AASHTO T 248.

4.2 Perform a minimum of two solvent extractions and a minimum of four ignition oven burns according to AASHTO T 164 and Illinois-Modified AASHTO T 308, respectively.

4.3 AB Binder Calibration

4.3.1 Calculate the average Asphalt Binder (AB) percentage of the two extractions, P_{ext}. Calculate the average AB percentage of the four ignition oven burns, P_{ign}. Assuming the average AB content from the extraction to be correct, subtract the average extraction AB percentage from the average ignition oven AB percentage to determine the asphalt correction factor, C_f.

$$C_f = P_{ign} - P_{ext}$$

Use the asphalt correction factor to adjust the ignition oven asphalt content on all subsequent testing of that stockpile.

4.4 Gradation Calibration

4.4.1 From the two extractions, calculate the average percent passing the applicable sieve, G_{ext}. Calculate the average percent passing each applicable sieve from the four ignition oven burns, G_{ign}. Subtract the extraction average percent passing each sieve from the ignition oven average of the corresponding sieve to determine a correction factor, GC_f, for gradation for each sieve.

$$GC_f = G_{ign} - G_{ext}$$

5.0 REPORT

5.1 Report the correction factors to the nearest 0.1%

6.0 PRECISION AND BIAS

6.1 The estimates of precision and bias shall be considered those that apply to the referenced documents.

Illinois Test Procedure 403
Calibration of the Ignition Oven for the Purpose of Characterizing Reclaimed Asphalt Pavements (RAP)
Appendix B13
(continued)
Effective January 1, 2002
Revised: May 1, 2007

7.0 USE

7.1 Use the correction factor for percent passing the No. 200 (75-µm) sieve to adjust the minus No. 200 (75-µm) material from the ignition oven on all subsequent testing of that stockpile.

7.2 Use the asphalt correction factor to adjust the ignition oven asphalt content on all subsequent testing of that stockpile.

7.3 The ignition oven washed gradations may be used uncorrected for all sieves except for the No. 200 (75-µm) sieve.

This Page Reserved

Truck Sample Splitting Diagram
Appendix B14
Effective: January 1, 2002
Revised: May 1, 2007

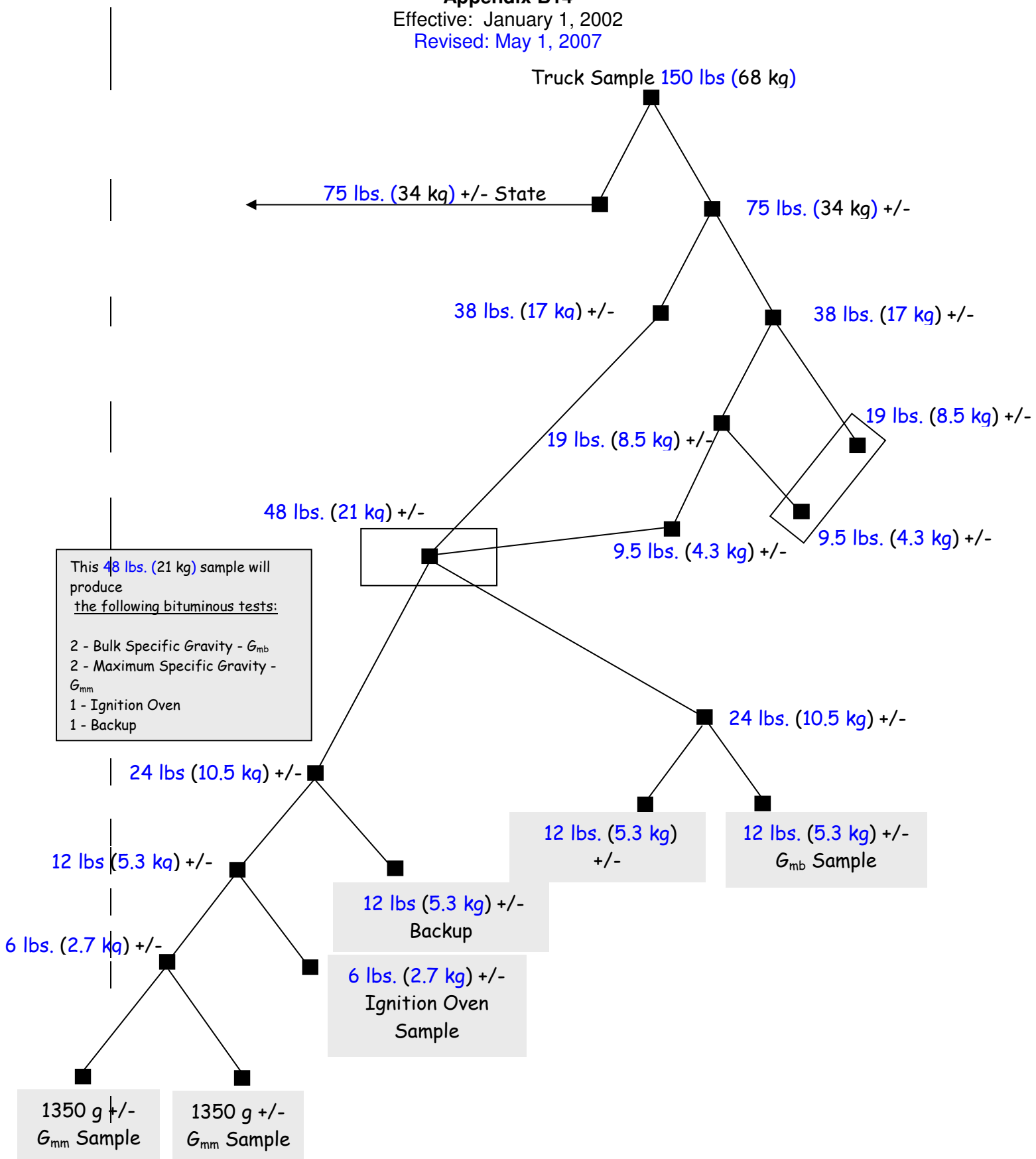

This Page Reserved

Illinois Department of Transportation

Hot Mix Asphalt (HMA) Production Gradation Windage Procedure for Minus #200 (minus 75µm) Material Appendix B15

Effective: May 1, 2004
Revised: May 1, 2007

A. Scope

The Contractor will be required to provide production gradation test results for both washed ignition oven gradations (WIOG) and dry combined belt / hot bin gradations on the same control chart according to Section 1030 of the Standard Specifications. In order for this data to be meaningful, the dry combined belt / hot bin gradations shall be calibrated to the WIOG using the windage factor established below.

B. Purpose

A windage factor (WF) shall be determined and applied to dry gradation production test results in order to establish a WIOG equivalency. The WF accounts for the difference, in minus #200 (minus 75µm) material, between dry combined belt/hot bin gradations and WIOG due to the following:

- variability in the addition of Mineral Filler
- washed vs. dry gradation (cling-on dust)
- generation of dust through plant aggregate degradation

C. Procedure

The WF shall be determined during Start-up. During mix production, adjustments to the WF may be warranted. Therefore, a new WF may be established, according to the following procedure, anytime during the course of mix production.

1. Obtain two combined belt/hot bin aggregate samples and perform two dry gradation (DG) tests. The DG shall include the theoretical amount of mineral filler to be added. Average the two test results for the minus #200 (minus 75µm) material.

   $$\text{Average } DG_{-\#200} = (DG_{\#1} + DG_{\#2}) / 2$$

2. Obtain two samples of HMA representing, near as possible, material from step one. Perform WIOG testing on the HMA samples and average the two results for minus the #200 (minus 75µm) material.

   $$\text{Average } WIOG_{-\#200} = (WIOG_{\#1} + WIOG_{\#2}) / 2$$

3. Determine WF by subtracting Average $DG_{-\#200}$ in step 1 from Average $WIOG_{-\#200}$ in step 2.

   $$WF = \text{Average } WIOG_{-\#200} - \text{Average } DG_{-\#200}$$

4. Add WF to all combined belt/hot bin gradation test results prior to plotting on the Minus #200 (minus 75µm) Control Chart. All, (including WIOG test results used to establish WF, are plotted directly on the Minus #200 (minus 75µm) Control Chart. When both the DG and WIOG test results represent the same material, the WIOG are the results to be included in the moving average.

Example:

Given:

- $WIOG_{\#1}$ (minus #200) = 4.8% (Truck sample taken between growth curves)
- $WIOG_{\#2}$ (minus #200) = 4.6% (Truck sample taken from outside Test Strip area during startup)
- $DG_{\#1}$ (minus #200) = 2.7% (Combined belt sample taken to correspond to material sampled for $WIOG_{\#1}$)
- $DG_{\#2}$ (minus #200) = 2.1% (Combined belt sample taken to correspond to material sampled for $WIOG_{\#2}$)

Step 1. Average the two DG test results for the minus #200 (minus 75µm) material.

Average $DG_{-\#200}$ = (2.7% + 2.1%) / 2 = 2.4%

Step 2. Average the two WIOG test results for the minus #200 (minus 75µm) material.

Average $WIOG_{-\#200}$ = (4.8% + 4.6%) / 2 = 4.7%

Step 3. Determine WF by subtracting Average $DG_{-\#200}$ in step 1 from Average $WIOG_{-\#200}$ in step 2.

WF = 4.7% - 2.4% = 2.3%

Step 4. Add WF = 2.3% to all combined belt/hot bin gradation test results prior to plotting on the Minus #200 (minus 75µm) Control Chart.

Stripping of Hot-Mix Asphalt Mixtures
Visual Identification and Classification
Appendix B16

Effective: November 20, 2003
Revised: January 1, 2014

The following instructions describe the method to be used for visually identifying and classifying the effect of moisture damage on the adhesion of asphalt binder to the aggregate in Hot-Mix Asphalt (HMA) mixtures. This procedure provides the means to rate this phenomenon in numerical terms. This procedure is applicable to both laboratory compacted specimens and pavement cores[1].

INSTRUCTIONS

1. This procedure shall only be applied to freshly split specimen faces, such as those obtained from split tensile testing. The observation of cored, sawed, or chiseled faces shall be avoided, as the true condition of the stripping will be obscured.

2. The rating shall be completed within 10 minutes of splitting for maximum clarity. When the specimens dry out, they may look considerably different. The aggregate surfaces shall be examined carefully to determine if the asphalt binder was stripped from the aggregate as a result of being "washed" by water before the specimen was split or if the asphalt binder was "ripped apart" near the asphalt/aggregate interface during the split tensile test. Also, aggregate surfaces with small, relatively isolated, globules of asphalt binder are quite likely not stripped.

3. Special attention shall be given to fractured and broken aggregates. Fractured aggregates are those that were cracked during compaction. These fractured aggregates will have a distinct face with a dull or discolored surface. Broken aggregates are those that were broken during the split tensile test. Broken aggregates often occur near the outside surface of the specimen where the compressive forces are greatest. These broken aggregates will also have a distinct broken face, but will have a bright, uncoated surface. The broken aggregates may be a continuation of a crack that was started during compaction. There is no evidence that a broken aggregate was broken entirely under the compressive force of the split tensile test.

4. Coarse aggregate particles shall be defined as those particles retained on the #8 sieve. Fine aggregate particles shall be defined as those particles that will pass through a #8 sieve.

5. When examining the split face, use the entire face area of all the fine particles separately from all the coarse particles on the split face to determine the percentage of the total area that is stripped. Do not use the percent of the area of each individual stone that is stripped to collectively determine the percentage of stripped aggregate particles on the entire split face of the specimen. Also, do not estimate the percentage of aggregate particles that are stripped based on the total number of aggregate particles. (i.e., a small stripped aggregate particle does not affect the entire specimen the same as a large stripped aggregate particle.)

[1] Pavement cores taken from the field shall be sealed in plastic bags immediately after coring in order to retain their in-situ moisture. Pavement cores shall be split and visually rated as soon as possible after coring to avoid any "healing" of the asphalt to the aggregate surfaces.

Stripping of Hot-Mix Asphalt Mixtures
Visual Identification and Classification
Appendix B16
(continued)
Effective: November 20, 2003
Revised: January 1, 2014

PROCEDURE

1. Obtain a freshly split face through the split tensile test.

2. Observe the coarse aggregate of the split face with the naked eye. Pay special attention to the coarse aggregate that is broken or fractured. These particles are not stripped.

3. Assign a strip rating to the coarse aggregate of the split face based on the following descriptions:

   1 - Less than 10% of the entire area of all the coarse aggregate particles is stripped (no stripping to slight stripping).

   2 - Between 10% and 40% of the entire area of all the coarse aggregate particles is stripped (moderate stripping).

   3 - More than 40% of the entire area of all the coarse aggregate particles is stripped (severe stripping).

4. Observe the fine aggregate particles and rate the particles for percent of the area showing moisture damage. A microscope or magnifying glass with a total magnification of 10X shall be used to aid in viewing the specimens. Observe the fine aggregate particles and mentally rate the particles present in the field of view. Move the specimen to a new field of view and rate the particles present. Repeat this process once more, ensuring a new field of view is chosen. Average the three observations.

5. Assign a strip rating to the fine aggregate of the split face based on the following descriptions:

   1 - Less than 10% of the entire area of all the fine aggregate particles viewed is stripped (no stripping to slight stripping).

   2 - Between 10% and 25% of the entire area of all the fine aggregate particles viewed is stripped (moderate stripping).

   3 - More than 25% of the entire area of all the fine aggregate particles viewed is stripped (severe stripping).

6. Report the individual strip ratings for both the coarse and fine aggregate on the strip rating form. Include any comments or special notes about the observations from that specimen.

7. Average all the individual strip ratings for the conditioned specimens (typically 3) for a given test sample. Calculate a separate average for both coarse and fine aggregates. The average coarse and fine strip ratings for the unconditioned specimens (typically 3) may also

be calculated for a given test sample. These average ratings give a quick overall appraisal of the moisture susceptibility of the sample. Note that the averaged ratings may not be simple whole numbers.

STRIP RATING FORM

PROJECT _____ **DATE** _____

GENERAL COMMENTS _____

SPECIMEN NO.	TYPE OF CONDITIONING	COARSE RATING	FINE RATING	COMMENTS

Procedure for Introducing Additives to Hot Mix Asphalt Mixtures and Testing in the Lab Appendix B17

Effective Date: March 7, 2005
Revised: January 1, 2013

1.0 GENERAL

Moisture damage or stripping is considered to be one of the main reasons for an asphalt pavement (especially full depth asphalt pavement) not lasting indefinitely. Stripping is the weakening and loss of the adhesive bond between aggregates and asphalt binder, in the presence of moisture. Various additives can be used to help reduce the stripping potential of an aggregate. In Illinois, liquid anti-strip additives are used almost exclusively. However, other states use or require adding hydrated lime in HMA. Hydrated Lime is considered, by many, as a superior additive for moisture damage control and prevention. It typically is added to the aggregate and asphalt mixture by one of three methods, the dry, the wet, or the slurry method.

Different levels of conditioning can be used in lab-prepared specimens to simulate the effect of the actual moisture conditions in the field. Four levels are described in this document. The level of conditioning actually used will be as specified in contract documents or as determined in the workplan for research.

2.0 PURPOSE

A. This procedure applies to using additives in hot mix asphalt (HMA) mixtures and testing those mixtures in the lab. This procedure includes the dry method of hydrated lime addition as well as the wet method and the slurry method. Also, this procedure includes specimens containing no additive, liquid anti-strip, polymer-modified asphalt, and polymer-modified asphalt with hydrated lime or liquid anti-strip.

B. Four levels of conditioning are included in this procedure and are used when specified. These four levels are no conditioning (or control), submerging in a hot water bath, one cycle of freezing followed by submerging in the hot water bath, and five freeze and hot water bath cycles. The conditioned samples are all partially saturated with water before the freeze and hot water bath cycles begin.

C. Illinois-modified AASHTO T-283 and T-324 are the standard specifications in Illinois that are required and used to test all HMA mixtures for moisture susceptibility. Only specimens with no conditioning and specimens conditioned in the hot water bath shall be tested according to Illinois-modified AASHTO T-283.

In addition to the conditioning and testing specified in Illinois-modified AASHTO T-283 and T-324, this procedure also contains guidelines for conditioning and testing specimens using freeze/thaw conditioning cycles. Freeze/thaw cycles shall be used if specified and also may be used for research projects. Utilizing five freeze/thaw cycles is harsher than the other conditioning methods in this

procedure and is considered to more effectively predict the long-term susceptibility to moisture damage of specific materials and mixtures.

D. Tensile strengths are determined and the tensile strength ratio (TSR) is calculated. The tensile strength of the unconditioned specimens is compared with the tensile strength of the specimens from each of the applicable levels of conditioning to determine the TSR. The TSR is a measure of the relative effect that each additive type and conditioning method has on the moisture susceptibility of the samples. The results are used to compare the various additives and their effect on the stripping potential of each mix and to determine the best additive to be used for a specific mixture containing a specific blend of materials.

3.0 MATERIALS

A. The hydrated lime shall conform to Section 1012.01 of the Standard Specifications for Road and Bridge Construction. Illinois-modified AASHTO T-27 shall be used to determine the maximum percent of the hydrated lime retained on specified sieves.

The HMA Mix Design shall be performed using the hydrated lime addition method and / or the liquid anti-strip type that will be used during actual production in the field.

B. The liquid anti-strip and / or hydrated lime method used must result in:
   1) A conditioned tensile strength that is equal to, or greater than, the original conditioned tensile strength for the same mixture without the additive,
   2) A TSR value that is equal to, or greater than, 0.85 for 6-inch (150 mm) diameter specimens, and
   3) Hamburg Wheel test results for rut depth and number of wheel passes according to Illinois modified AASHTO T-324.

4.0 SAMPLE PREPARATION

A. Dry Aggregates:

Dry the aggregate samples in a 230 ± 9 °F (110 ± 5 °C) oven so that the batch weights and additive amounts can be accurately determined.

B. Split Aggregates:

The aggregate samples will then be split according to Illinois-modified AASHTO T-248.

Procedure for Introducing Additives to
Hot Mix Asphalt Mixtures and Testing in the Lab
Appendix B17
(continued)

Effective Date: March 7, 2005
Revised Date: January 1, 2013

C. Blend Aggregates:

The aggregates will be blended into the correct batch size. Because of the large size of the gyratory specimens, each batch will contain enough material for two gyratory specimens (approximately 8000 - 8500 grams for tensile strength and TSR and approximately 5000 – 5500 grams for the Hamburg Wheel test). Several batches will need to be prepared to produce the required number of gyratory specimens (six for strength and TSR and four for Hamburg Wheel testing as well as pilot specimens). Also, include sufficient material in one of the batches for a maximum specific gravity (Gmm) test run according to Illinois-modified AASHTO T-209 (approximately 2000 grams).

D. Mix Samples:

1. With No Additive:

   a. Heat the asphalt binder and the dry aggregate blend to a mixing temperature of 295 ± 5 °F (146 ± 2.8°C) for neat asphalt.
   b. Remove the blend from the oven and make a small crater in the top of the hot, dry aggregates.
   c. Add the correct amount of asphalt binder to the batch.
   d. Mix the aggregates and asphalt binder.

2. Hydrated Lime – Dry Method:

   a. List the hydrated lime in its own column on the Aggregate Blending Sheet and enter the percent passing each sieve in the corresponding line on the form.
   b. 1.0% hydrated lime is added to the mix. The 1.0% hydrated lime is based on the total dry weight of aggregate in the mix and is added in addition to the mineral filler specified in the mix design.

   NOTE: Theoretically when hydrated lime is added by the dry method, it is assumed that half of the hydrated lime (0.5%) adheres to the aggregate and that the other half (0.5%) of the hydrated lime acts like mineral filler and becomes part of the asphalt binder in the HMA mix. However, for design purposes (and to adapt to existing design software), the hydrated lime is all considered as a separate aggregate, similar to mineral filler, and the gradation of all of the hydrated lime contributes to the overall blend gradation.

c. When hydrated lime is used in a mix design, it is important to include sufficient added mineral filler in the design. During plant production some of this mineral filler may need to be removed to compensate for the fines that are generated during production.

d. Calculate the dust correction factor (DCF) according to the "Hot-Mix Asphalt Mix Design Procedure for Dust Correction Factor Determination", on each mix design with hydrated lime added. Include the hydrated lime in both the job mix formula (JMF) gradation and the washed gradation on the aggregate combined blend. The DCF procedure is performed to account for additional minus 75-µm (minus No. 200) material present as a result of batching with unwashed aggregates. Refer to the attached sheet which shows an example calculation of the DCF.

Procedure for Introducing Additives to Hot Mix Asphalt Mixtures and Testing in the Lab
Appendix B17
(continued)

Effective Date: March 7, 2005
Revised Date: January 1, 2013

DCF Example

Bituminous Mixture Design

Design Number	50 BITEXPL
Lab preparing the design (IPP, P L, IL etc.)	IDOT
Producer, Name & Number	1111-01 Example Company Inc Somewhere 1, IL
Material Code Number	17662 BITCONC BCS 1 B TONS

Agg No.	#1	#2	#3	#4	#5	#6	ASPHALT
Size	032CMM11	032CMM16	038FAM20	037FAM01	004MFM01	003FA00	10124M
Source (PROD#)	51972-02	51972-02	51230-06	51790-04	51052-04	50315-07	2260-01
(NAME)	MAT SER	MAT SER	MIDWEST	CONICK	LIVINGSTON	MARBLEHD	BMLS COAT
(LOC)							
Aggregate Blend	37.5	35.0	14.0	10.0	2.5	1.0	100.0

Agg No	#1	#2	#3	#4	#5	#6	Blend
Sieve Size							
1	100.0	100.0	100.0	100.0	100.0	100.0	100.0
3/4	99.0	100.0	100.0	100.0	100.0	100.0	96.6
1/2	46.0	100.0	100.0	100.0	100.0	100.0	79.4
3/8	19.0	97.0	100.0	100.0	100.0	100.0	68.8
#4	6.0	29.0	97.0	97.0	100.0	100.0	39.2
#8	2.0	7.0	80.0	85.0	100.0	100.0	26.4
#16	2.0	4.0	50.0	65.0	100.0	100.0	19.2
#30	1.8	3.0	35.0	43.0	100.0	100.0	14.4
#50	1.7	3.0	19.0	16.0	100.0	99.0	9.4
#100	1.5	3.0	10.0	5.0	90.0	99.0	6.8
#200	1.3	1.3	4.0	2.6	88.0	96.3	4.8

Step 1. Batch a combined aggregate sample meeting the JMF. Illinois Specification 201 requires a 5000-gram sample when CM-11 is present. Include the hydrated Lime in the Blend.

Step 2. Run a washed test using AASHTO T-11

Step 3. Determine the Dust Correction Factor (DCF). The DCF is the difference in the percent passing the 75-µm (no. 200) sieve between the washed test and the JMF.

	JMF	Washed Test	DCF
75-µm (no. 200)	4.9%	6.0%	1.1%

Step 4. Determine the Mineral Filler Reduction (MFR) by dividing the DCF (%) by the percent (in decimal form) mineral filler gradation passing the 75-µm (No. 200) sieve:

MFR (%) = 1.1 / 0.88 = 1.25%

Step 5. Determine the adjusted mineral filler blend percentage by subtracting the MFR (%) from the blend percentage of mineral filler.

2.5% - 1.25% = 1.25%

Step 6. Adjust the remaining blend percentages of the coarse and fine aggregates to sum 100 by dividing each by the quantity [1 - MFR (in decimal form)]. Do not adjust the hydrated lime blend percentage of 1.0%.

	Blend Percentage	Adjusted Blend Percentage
032CMM11	37.5	38.0
032CMM16	35.0	35.4
038FAM20	14.0	14.2
037FAM01	10.0	10.1
004MFM01	2.5	1.3
003FA00	1.0	1.0
	100.0	100.0

Note: It is important to note the Adjusted Blend Percentages are temporary percentages used during laboratory batching only. The original Blend Percentages on the "Design Summary Sheet" remain unchanged. Also, the Total Adjusted Blend Percentage may equal 100 as a result of rounding during calculation.

e. Heat the asphalt binder and the dry aggregates (not including mineral filler) to a mixing temperature of 295 ± 5 °F (146 ± 2.8°C) for neat asphalt or 325 ± 5 °F (163 ± 2.8°C) for polymer modified asphalt.
f. Make a small crater in the top of the hot, dry aggregates.
g. Add the correct amount of dry hydrated lime to the crater in the aggregates.
h. Mix the hydrated lime and aggregates until the aggregates are completely coated (approximately 10 to 15 seconds).
i. If the blend of aggregates and hydrated lime cools below the mixing temperature, place the blend back in the oven until the blend is returned to the mixing temperature (approximately 10 minutes).
j. Remove the blend from the oven and make a small crater in the top of the hot, dry aggregates and hydrated lime.
k. Add the correct amount of mineral filler, (if required in the mix design), to the crater in the aggregates.
l. Mix the mineral filler with the aggregates and hydrated lime until the mineral filler is uniformly dispersed in the blend (approximately 10 to 15 seconds).
m. If the blend of aggregates, hydrated lime, and mineral filler cools below the mixing temperature, place the blend back in the oven until the blend is returned to the mixing temperature (approximately 10 minutes).
n. Make a crater in the aggregates and add the correct amount of asphalt binder to aggregates, hydrated lime, and mineral filler.
o. Mix the asphalt binder with the blend of aggregates, hydrated lime, and mineral filler.

3. Hydrated Lime – Wet Method:

a. List the hydrated lime in its own column on the Aggregate Blending Sheet and enter the percent passing each sieve in the corresponding line on the form.
b. 1.0% hydrated lime is added to the mix. The 1.0% hydrated lime is based on the total dry weight of aggregate in the mix and is added in addition to the mineral filler specified in the mix design.

NOTE: Theoretically when hydrated lime is added by the wet method, it is assumed that all of the hydrated lime (1.0%) adheres to the aggregate and does not function like mineral filler which becomes mixed with the asphalt binder in the HMA mix. Accordingly, the lime is added in addition to the mineral filler specified in the mix design. For design purposes (and to adapt to existing design software), the hydrated lime is all considered as a separate

aggregate, similar to mineral filler, and the gradation of all of the hydrated lime contributes to the overall blend gradation.

c. When hydrated lime is used in a mix design, it is important to include sufficient added mineral filler in the design. During plant production some of this mineral filler may need to be removed to compensate for the fines that are generated during production.
d. Calculate the dust correction factor (DCF) according to the "Hot-Mix Asphalt Mix Design Procedure for Dust Correction Factor Determination", on each mix design with hydrated lime added to wet aggregates. Include the hydrated lime in both the job mix formula (JMF) gradation and the washed gradation on the aggregate combined blend. The DCF procedure is performed to account for additional minus 75-µm (minus No. 200) material present as a result of batching with unwashed aggregates. Perform the washed gradation on the combined aggregate blend containing the hydrated lime after it has been allowed to dry on the aggregates (step h.). Refer to the previously attached sheet which shows an example calculation of the DCF.
e. Add the amount of water that is equal to the aggregate's water absorption capacity to the cooled and blended, oven-dried aggregates. The aggregates should be in their saturated surface dry (SSD) condition.
f. Add an additional three percent of water, based on the total dry weight of aggregates, to the aggregates in the SSD condition. Stir the aggregates and the additional water to ensure that the water is evenly mixed with the aggregates.
g. Add one percent dry hydrated lime to the wet aggregates, based on the total dry weight of the aggregates. Stir and mix until the hydrated lime coats the aggregates and the aggregates and hydrated lime make up a homogeneous mixture.
h. Dry the aggregates coated with the hydrated lime in a 230 ± 9 °F (110 ± 5℃) oven to constant mass, as defined in Illinois-modified AASHTO T-166.
i. Heat the hydrated lime-coated aggregates and the asphalt binder each to a mixing temperature of 295 ± 5 °F (146 ± 2.8℃) for neat asphalt or 325 ± 5 °F (163 ± 2.8℃) for polymer modified asphalt.
j. Remove the blend from the oven and make a small crater in the top of the hot, dry, hydrated lime-covered aggregates.
k. Add the correct amount of mineral filler, (if required in the mix design), to the crater in the aggregates.

l. Mix the mineral filler with the hydrated lime-covered aggregates until the mineral filler is uniformly dispersed in the blend (approximately 10 to 15 seconds).

m. If the blend of hydrated lime-coated aggregates and mineral filler cools below the mixing temperature, place the blend back in the oven until the blend is returned to the mixing temperature (approximately 10 minutes).

n. Make a crater in the aggregates and add the correct amount of asphalt binder to the mixture of hydrated lime-covered aggregates and mineral filler.

o. Mix the hydrated lime-coated aggregates, mineral filler, and asphalt binder together until the aggregates are completely coated with the asphalt binder.

4. Hydrated Lime – Slurry Method:

a. List the hydrated lime in its own column on the Aggregate Blending Sheet and enter the percent passing each sieve in the corresponding line on the form.

b. 1.0% hydrated lime is added to the mix. The 1.0% hydrated lime is based on the total dry weight of aggregate in the mix and is added in addition to the mineral filler specified in the mix design.

NOTE: Theoretically when hydrated lime is added by the slurry method, it is assumed that all of the hydrated lime (1.0%) adheres to the aggregate and does not function like mineral filler which becomes mixed with the asphalt binder in the HMA mix. Accordingly, the lime is added in addition to the mineral filler specified in the mix design. For design purposes (and to adapt to existing design software), the hydrated lime is all considered as a separate aggregate, similar to mineral filler, and the gradation of all of the hydrated lime contributes to the overall blend gradation.

c. When hydrated lime is used in a mix design, it is important to include sufficient added mineral filler in the design. During plant production some of this mineral filler may need to be removed to compensate for the fines that are generated during production.

d. Calculate the dust correction factor (DCF) according to the “Hot-Mix Asphalt Mix Design Procedure for Dust Correction Factor Determination”, on each mix design with hydrated lime slurry added. Include the hydrated lime in both the job mix formula (JMF) gradation and the washed gradation on the aggregate combined blend. The DCF procedure is performed to account for additional minus 75-µm (minus No. 200)

material present as a result of batching with unwashed aggregates. Perform the washed gradation on the combined aggregate blend containing the hydrated lime slurry after it has been allowed to dry on the aggregates (step h.). Refer to the previously attached sheet which shows an example calculation of the DCF.

e. Add the amount of water that is equal to the aggregate's water absorption capacity to the cooled and blended, oven-dried aggregates. The aggregates should be in their saturated surface dry (SSD) condition.

f. Mix one percent dry hydrated lime and three percent water together, each based on the total weight of aggregates, to form a slurry.

g. Add the slurry to the aggregates. Stir and mix until the aggregates and hydrated lime slurry make up a homogeneous mixture.

h. Dry the aggregates coated with the hydrated lime slurry in a 230 ± 9 °F (110 ± 5℃) oven to constant mass, as defined in Illinois-modified AASHTO T-166.

i. Heat the hydrated lime-coated aggregates and the asphalt binder each to a mixing temperature of 295 ± 5 °F (146 ± 2.8℃) for neat asphalt or 325 ± 5 °F (163 ± 2.8℃) for polymer modified asphalt.

j. Remove the blend from the oven and make a small crater in the top of the hot, dry, hydrated lime-covered aggregates.

k. Add the correct amount of mineral filler, (if required in the mix design), to the crater in the aggregates.

l. Mix the mineral filler with the hydrated lime-covered aggregates until the mineral filler is uniformly dispersed in the blend (approximately 10 to 15 seconds).

m. If the blend of hydrated lime-coated aggregates and mineral filler cools below the mixing temperature, place the blend back in the oven until the blend is returned to the mixing temperature (approximately 10 minutes).

n. Make a crater in the aggregates and add the correct amount of asphalt binder to the mixture of hydrated lime-covered aggregates and mineral filler.

o. Mix the hydrated lime-coated aggregates, mineral filler, and asphalt binder together until the aggregates are completely coated with the asphalt binder.

5. Liquid Anti-strip

a. Add 0.5% of liquid anti-strip (by weight of asphalt) to the asphalt binder and mix together until the liquid anti-strip is distributed thoroughly in the asphalt binder.

b. Heat the aggregates and asphalt binder each to a mixing temperature of 295 ± 5 °F (146 ± 2.8°C) for neat asphalt or 325 ± 5 °F (163 ± 2.8°C) for polymer modified asphalt.
c. Remove the aggregate blend from the oven and make a small crater in the top of the hot, dry aggregates.
d. Add the asphalt binder with liquid anti-strip to the dried aggregates.
e. Mix the aggregates and the asphalt binder.

6. Polymer

a. Heat the aggregates and asphalt binder each to a mixing temperature of 325 ± 5 °F (163 ± 2.8°C).
b. Remove the aggregate blend from the oven and make a small crater in the top of the hot, dry aggregates.
c. Add the correct amount of polymer-modified asphalt binder to aggregate blend.
d. Mix the aggregate blend and the polymer-modified asphalt binder.

7. Polymer with Hydrated Lime

a. Heat the polymer-modified asphalt binder to a mixing temperature of 325 ± 5 °F (163 ± 2.8°C).
b. Add the correct amount of hydrated lime to the dry aggregates. (1% based on the total weight of aggregates). Follow the instructions for adding hydrated lime dry method (section 2), hydrated lime wet method (section 3), or hydrated lime slurry method (section 4) above.
c. Heat the aggregates a mixing temperature of 325 ± 5 °F (163 ± 2.8°C).
d. Remove the blend from the oven and make a small crater in the top of the hot, dry aggregates and hydrated lime.
e. Add the correct amount of mineral filler (if required in the mix design) to the crater in the aggregates.
f. Mix the mineral filler with the aggregates and hydrated lime until the mineral filler is uniformly dispersed in the blend (approximately 10 to 15 seconds).
g. If the blend of aggregates, hydrated lime, and mineral filler cools below the mixing temperature, place the blend back in the oven until the blend is returned to the mixing temperature (approximately 10 minutes).
h. Make a crater in the aggregates and add the correct amount of polymer-modified asphalt binder to aggregates, hydrated lime, and mineral filler.

i. Mix the hydrated lime-coated aggregates and the polymer-modified asphalt binder.

E. Split Samples:

Split the batches into the correct sample size which will make a gyratory specimen 3 ¾ in. (95 mm) high (approximately 4200 grams).

F. Compact Samples:

1. Run a maximum specific gravity (Gmm) for each of the additive mix types being evaluated.

2. Heat the mixture to a compaction temperature of 295 ± 5 °F (146 ± 2.8°C) for neat asphalt or 305 ± 5 °F (152 ± 2.8°C) for polymer-modified asphalt.

3. Pilot bricks from the mixes for each type of additives being evaluated will be made to determine the correct compaction level to achieve 7.0 ± 0.5% air voids.

4. Run a bulk specific gravity (Gmb), according to Illinois-modified AASHTO T-166, for each pilot brick to determine the air void content.

5. Compact samples to 7.0 ± 0.5% air voids for each mix additive type using the number of gyrations determined above.

6. A total of 12 individual samples will be compacted for each additive mix type for each complete round of testing.

7. Run a Gmb on each sample to verify that the air voids are within the range of 7.0 ± 0.5%.

5.0 TESTING

Illinois Modified AASHTO T-283

For each set of samples for each additive type:

A. Control Sample Set – (Always use unless otherwise specified):

1. Three bricks will be tested with no conditioning.

2. The samples will be:

   a. Placed in a 77°F (25°C) water bath for a minimum of two hours to bring the sample to room temperature.
   b. Placed between the loading heads and loaded at 2 in. (50 mm) per minute until failure.

3. The corresponding load will be recorded.

4. The indirect tensile strength (ITS) will be calculated using the equation:

$$ITS = \frac{2 \times P}{\pi \times t \times d}$$

where:

P = Load (pounds)
π = 3.1416
t = Sample Thickness (inches)
d = Sample Diameter (inches)

5. Within 10 minutes after breaking the sample in the indirect tensile tester, the split samples will be inspected visually to evaluate the amount and degree of moisture damage. This will be done according to the IDOT procedure, "Stripping of Hot Mix Asphalt Mixtures - Visual Identification and Classification".

B. Illinois-Modified AASHTO T-283 Sample Set – (Always use unless otherwise specified):

1. Three bricks will be tested according to IL-modified AASHTO T-283.

2. The samples will be:

   a. Vacuum saturated to 70 - 80%. Use a vacuum of approximately 0.8 to 1.0 in. (20 to 25 mm) of mercury (Hg) for one minute. Start with 0.8 in. (20 mm) Hg for one minute, and then weigh the specimen. Increase the vacuum until the saturation is 70 - 80%.
   b. Soaked in a 140°F (60°C) water bath for 24 ± 1 hours, and
   c. Tested as above in "Testing; A; 2, 3, 4, & 5."

C. AASHTO T-283 Sample Set (with one freeze-thaw cycle) – (Only use when specified):

1. Three bricks will be tested according to AASHTO T-283.

2. Each sample will be:

   a. Vacuum saturated to 70 - 80%. Use a vacuum of approximately 0.8 to 1.0 in. (20 to 25 mm) of mercury (Hg) for one minute. Start with 0.8 in. (20 mm) Hg for one minute, and then weigh the specimen. Increase the vacuum until the saturation is 70 - 80%.
   b. Wrapped in plastic wrap (Saran Wrap) placed in a plastic bag with 10 mL of water and sealed in a plastic bag.
   c. Placed in a 0 ± 5°F (-18 ± 2.8°C) freezer for a minimum of 16 hours. (The exact time greater than 16 hours should be determined so that the testing can be done at approximately the same time each day).
   d. After removal from the freezer, the samples will be placed in a 140°F (60°C) water bath and soaked for 24 ± 1 hours, with the plastic bag and plastic wrap removed as soon as possible after being placed in the bath.
   e. After the freeze – thaw cycle is complete, follow the steps above in "Testing; A; 2, 3, 4, & 5."

D. AASHTO T-283 Sample Set (with five freeze-thaw cycles) – (Only use when specified):

1. Three bricks will be tested as in "Testing; C" above except that five complete freeze – thaw cycles will be completed instead of only one.

2. The plastic bag and plastic wrap should stay on the sample throughout the test and should not be removed until the beginning of the final thaw cycle in the 140°F (60°C) bath. If the plastic bag tears or if the plastic wrap comes loose, replace them prior to the next freeze cycle and add 10 mL of water.

3. After the final thaw cycle is complete, follow the steps above in "Testing; A; 2, 3, 4, & 5."

Illinois Modified AASHTO T-324: Perform a Loaded Wheel test according to Illinois modified AASHTO T-324.

Procedure for Introducing Additives to
Hot Mix Asphalt Mixtures and Testing in the Lab
Appendix B17
(continued)

Effective Date: March 7, 2005
Revised Date: January 1, 2013

6.0 DATA COLLECTION AND EVALUATION

A. All the data from testing will be collected and will/may include:

1. Gmm
2. Gmb
3. Voids
4. Indirect Tensile Strength
   a. Unconditioned
   b. Conditioned
      i. 140°F (60°C) water bath
      ii. One freeze / thaw cycle
      iii. Five freeze / thaw cycles
5. The standard TSR, for each additive type (calculated with the unconditioned strength in the denominator and with the conditioned strength in the numerator). For each additive type the TSR is calculated separately for each level of conditioning.
6. The combined TSR, which is similar to the standard TSR except that it is calculated by always using the unconditioned strength from samples with no additive in the denominator, regardless of the additive type used.
7. Visual strip rating of each sample.
8. Rut depth and number of wheel passes.

B. Evaluate the strengths, TSRs, rut depths, and wheel passes for each additive type, for each aggregate type tested, to determine if:

1. An anti-strip additive is needed and improves the performance of the mix.
2. One of the additive types consistently gives higher strengths, TSR ratings, rut depths, and wheel passes.

Illinois Department of Transportation

Ignition Oven Aggregate Mass Loss Procedure
Appendix B18

Effective: May 1, 2005
Revised: May 1, 2007

A. Purpose

Dolomite aggregates that contain significant amounts of Magnesium Carbonate, when used in Hot-Mix Asphalt, have been found to undergo mass loss during ignition oven testing, which causes highly variable results in asphalt binder content. This procedure utilizes the ignition oven to identify these types of aggregates.

B. Procedure

1. Obtain a 3000 gram sample of the aggregate to be tested and oven dry to a constant mass in an oven set at 110º C ± 5º (230º F ± 9º). Constant mass is achieved by drying sample until further drying does not alter the mass by more than 0.5 g in one hour as stated in IL Modified AASHTO T-30.

2. Split sample into 3 separate 1000 gram samples.

3. Place one of the 1000 gram samples into the ignition oven catch pan.

4. Record the initial weight of the sample and catch pan at room temperature to the nearest 0.1 gram.

5. Place the sample and catch pan into an ignition oven preheated to 625 ℃. ***Do not push the start button on the oven.*** Allow sample to remain in ignition oven for one hour.

6. After one hour, remove the sample and catch pan, allow it to cool to room temperature and record the weight to the nearest 0.1 gram.

7. Repeat steps 3 through 10 for the two remaining 1000 gram samples.

8. Calculate the aggregate mass loss for each run according to the following:

$$\Delta W = \left(\frac{Wi - Wf}{Wi} \right) \times 100$$

Where: ΔW = Aggregate mass loss in percent
Wi = Initial weight of the aggregate sample in grams
Wf = Final weight of the aggregate sample in grams after exposure to 625 ℃

9. Calculate the average of the three mass loss results.

10. Aggregates exhibiting average mass loss in excess of 4% are likely to contain significant amounts of Magnesium Carbonate and will likely cause high variability in ignition oven test results for asphalt content.

This Page Reserved

Procedure for Internal Angle Calibration of Superpave Gyratory Compactors (SGCs) using the Dynamic Angle Validator (DAV-2)

Internal Angle Testing with HMS

Nomenclature and DAV-2 orientation in the specimen mold

In the following sections, the terms “top” and “bottom” angles, “first position”, and “turned 90 degrees” will be used. This refers to the position where the DAV-2 will be collecting angle data. The following diagrams will display how the DAV-2 will be oriented in the gyratory specimen mold and will help avoid confusion in the midst of testing:

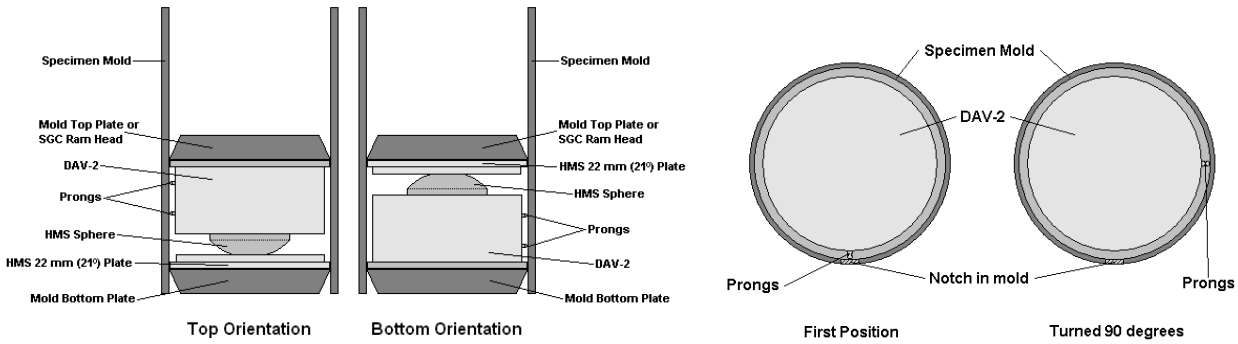

Basic method for all compactors (additional instructions included for early model Troxler 4140s)

1. Attach the HMS sphere to the top of the DAV-2 using the supplied bolt. Tighten the bolt enough so that the sphere will not turn, but do not over tighten as this could strip out the bolt. The HMS plates are referred to by their eccentricity, or how far (in mm) from the center of the sphere the load is applied. The 22 mm plate (the one labeled “21”, referring to the angle in degrees ground into the bottom of the plate) will be the only plate used in this calibration. Apply lubricant to the top of the sphere and to the angled surface on the bottom of the plate, as this will help to reduce wear from metal on metal contact. Petroleum jelly is the best lubricant to use with the DAV-2 and HMS.

2. Prior to testing, select two good, clean specimen molds to use for calibration. Make sure these molds are not too worn, are within specifications, and are used for production testing. The molds will be referred to as mold “A” and mold “B”. Place molds “A” and “B” into an oven set at 305° F / 154° C for a minimum of 30 minutes. Connect the DAV-2 to a CPU using the supplied interface cable. If the CPU doesn’t have a serial port, a serial to USB adapter may be used; these adapters, however, need software in order to function and this software must be installed before they will operate. There are three buttons in the Test Quip software that will be used. They are as follows:

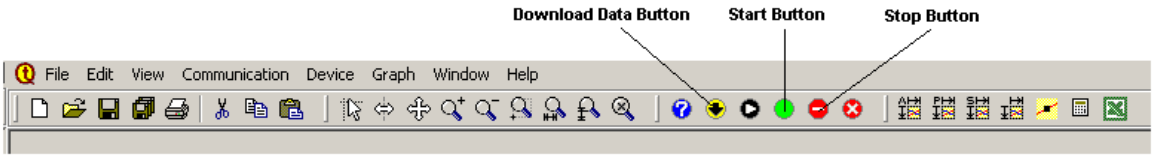

3. Open the Test Quip DAV-2 software and start data collection in the DAV-2 (“Start Button” in the illustration above). When data collection has been successfully initialized, disconnect the cable from the DAV-2. The DAV-2 has ~26 minutes of memory for data collection, so begin testing quickly so all test points will be collected within that time frame. Before placing the DAV-2 into a mold, apply lubricant to the bottom of the DAV-2. As the DAV-2 will spin during gyration, the lubricant will allow for free movement and help to reduce wear from metal on metal contact.

4. Take mold “A” out of the oven and begin testing. For the first bottom angle, place the DAV-2 and HMS plate into the mold, illustrated on the previous page as “bottom orientation". Choose a reference point on the mold (for example, the notch on the top of the Troxler 4140 molds makes a handy reference point) and line the DAV-2’s prongs up with that point, as in the “first position” illustration on the previous page, before lowering it all the way into the mold. Place the mold in the SGC and gyrate for 25 gyrations. After this, extrude the DAV-2, flip the DAV-2 and HMS plate upside-down, and place the HMS plate and DAV-2 back into the mold, illustrated on the previous page as “top orientation”. Gyrate the first top angle using the “first position”, as was done with the first bottom angle, to line up the prongs. Extrude the DAV-2 and put mold “A” back in the oven to reheat for possible further testing.

5. Remove mold “B” from the oven. Repeat the same process as with mold “A” for the second bottom and top angles; but for both these angles, line the prongs up with a point 90 degrees counter-clockwise from the “first position”, as in the “turned 90 degrees” illustration on the previous page. After running the second bottom and top angles, extrude the DAV-2 and put mold “B” back into the oven to reheat for possible further testing. These internal angles will yield a total of four test points for one “run”.

6. Connect the DAV-2 to the CPU with the interface cable and stop the data collection in the DAV-2 (“Stop Button” in the illustration on the previous page). Download the data to the CPU (“Download Data Button” in the illustration on the previous page). Label the data sheet as needed and save it to a pre-labeled file that has been set up for internal angle data. The data will look something like this:

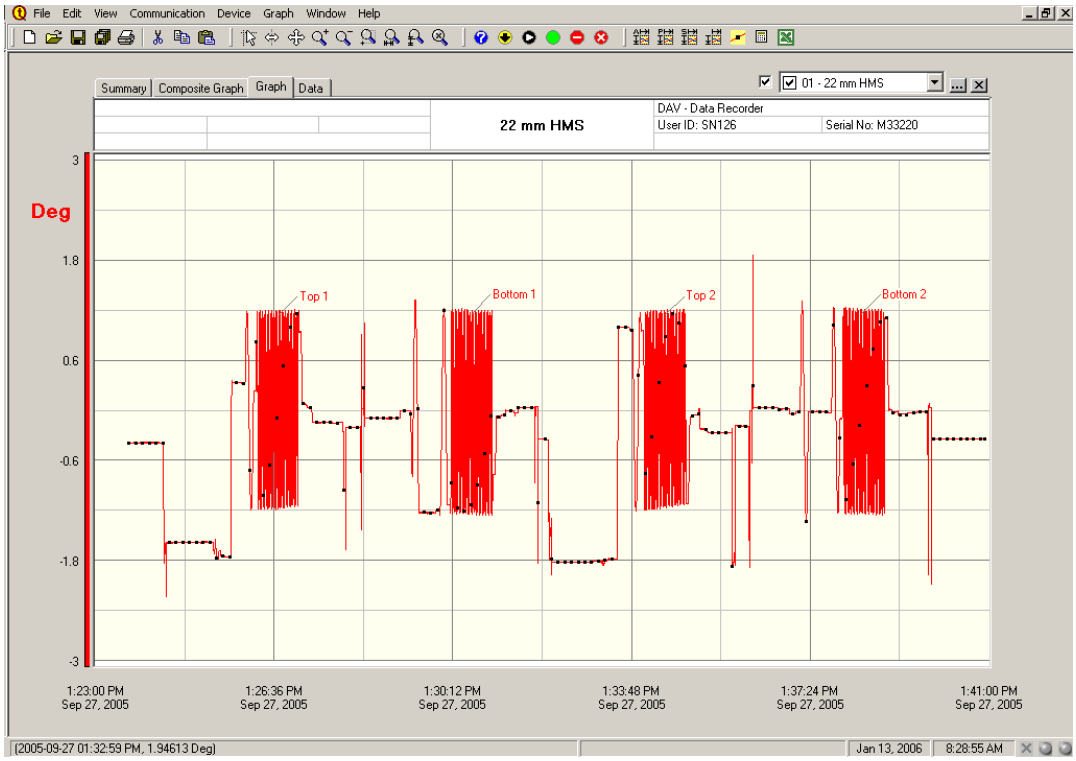

7. Open the DAV-2 Excel spreadsheet. Be sure to choose “Enable Macros” when prompted so the integrated buttons will function. A prompt should pop up asking to open a file. Choose the desired saved file and click “OK”. If the prompt doesn’t come up or an error occurs, simply click on the “Add Data” button. After the data imports to the spreadsheet, the initial page will look something like this:

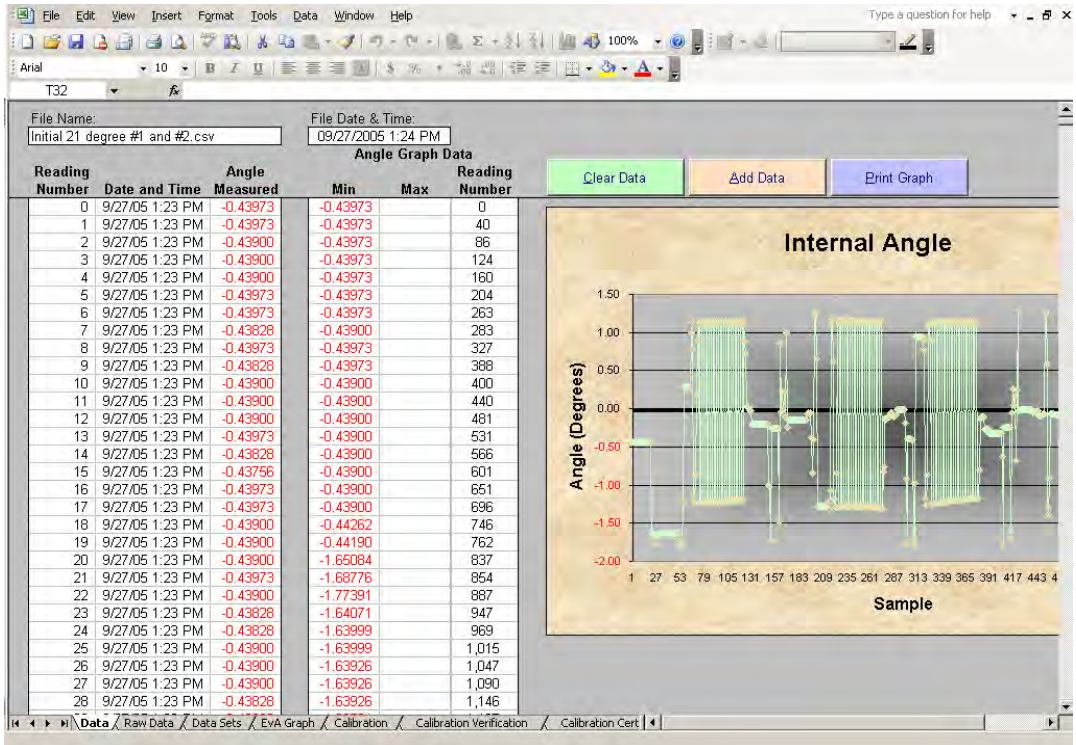

File Name: Initial 21 degree #1 and #2.csv

File Date & Time: 09/27/2005 1:24 PM

Angle Graph Data

Reading Number	Date and Time	Angle Measured	Min	Max	Reading Number
0	9/27/05 1:23 PM	-0.43973	-0.43973		0
1	9/27/05 1:23 PM	-0.43973	-0.43973		40
2	9/27/05 1:23 PM	-0.43900	-0.43973		86
3	9/27/05 1:23 PM	-0.43900	-0.43973		124
4	9/27/05 1:23 PM	-0.43900	-0.43973		160
5	9/27/05 1:23 PM	-0.43973	-0.43973		204
6	9/27/05 1:23 PM	-0.43973	-0.43973		263
7	9/27/05 1:23 PM	-0.43828	-0.43900		283
8	9/27/05 1:23 PM	-0.43973	-0.43973		327
9	9/27/05 1:23 PM	-0.43828	-0.43973		388
10	9/27/05 1:23 PM	-0.43900	-0.43900		400
11	9/27/05 1:23 PM	-0.43900	-0.43900		440
12	9/27/05 1:23 PM	-0.43900	-0.43900		481
13	9/27/05 1:23 PM	-0.43973	-0.43900		531
14	9/27/05 1:23 PM	-0.43828	-0.43900		566
15	9/27/05 1:23 PM	-0.43756	-0.43900		601
16	9/27/05 1:23 PM	-0.43973	-0.43900		651
17	9/27/05 1:23 PM	-0.43973	-0.43900		696
18	9/27/05 1:23 PM	-0.43900	-0.44262		746
19	9/27/05 1:23 PM	-0.43900	-0.44190		762
20	9/27/05 1:23 PM	-0.43900	-1.65084		837
21	9/27/05 1:23 PM	-0.43973	-1.68776		854
22	9/27/05 1:23 PM	-0.43900	-1.77391		887
23	9/27/05 1:23 PM	-0.43828	-1.64071		947
24	9/27/05 1:23 PM	-0.43828	-1.63999		969
25	9/27/05 1:23 PM	-0.43900	-1.63999		1,015
26	9/27/05 1:23 PM	-0.43900	-1.63926		1,047
27	9/27/05 1:23 PM	-0.43900	-1.63926		1,090
28	9/27/05 1:23 PM	-0.43828	-1.63926		1,146

8. Click on the “Data Sets” tab. In the “Data Sets” field, type in “4”; four individual angle measurements (or data sets) were run. In the “Gyrations” field, type in “24”; since the SGC and the DAV-2 may record the first gyration at different points, using a number one less than the number of gyrations entered into the SGC will ensure that the data will populate correctly. In the “Skip Gyrations” field, type in “2”; this is sufficient when running with the HMS. Click on the “Populate Data Sets” button and the internal angle data will be displayed in the blue boxes; the page will look something like this:

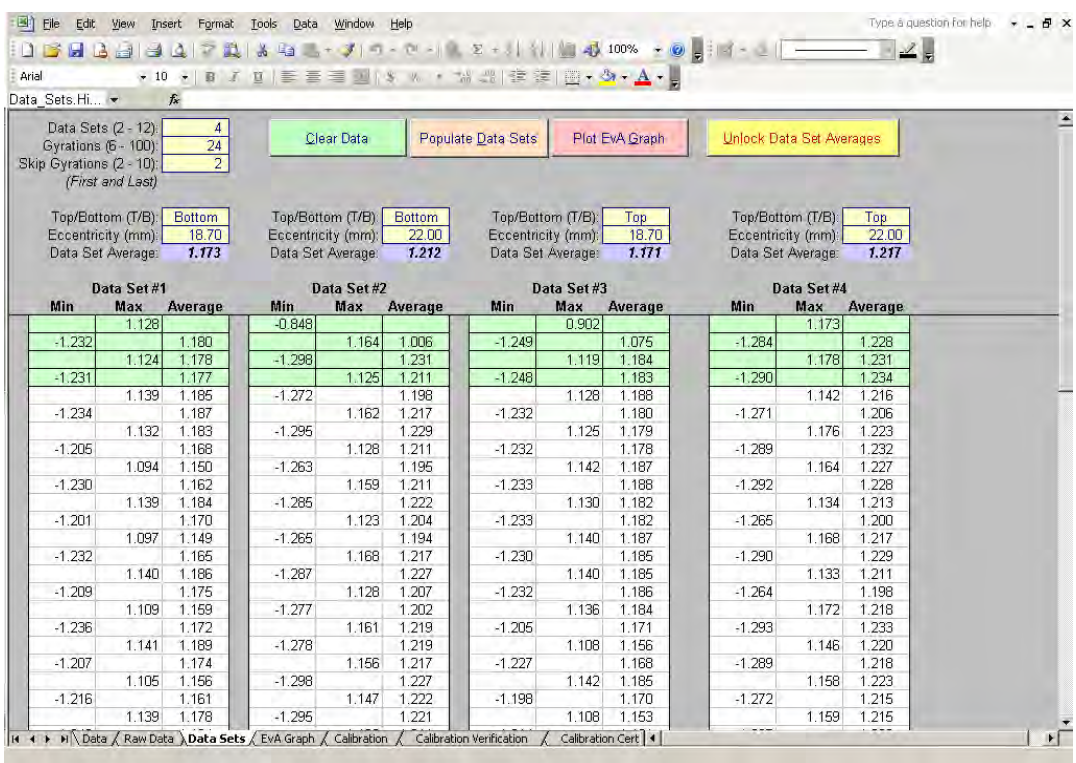

Data Sets (2 - 12): 4
Gyrations (6 - 100): 24
Skip Gyrations (2 - 10): 2
(First and Last)

Clear Data | Populate Data Sets | Plot EvA Graph | Unlock Data Set Averages

	Data Set #1			Data Set #2			Data Set #3			Data Set #4		
Top/Bottom (T/B):			Bottom			Bottom			Top			Top
Eccentricity (mm):			18.70			22.00			18.70			22.00
Data Set Average:			1.173			1.212			1.171			1.217
	Min	Max	Average	Min	Max	Average	Min	Max	Average	Min	Max	Average
		1.128		-0.848				0.902			1.173	
	-1.232		1.180		1.164	1.006	-1.249		1.075	-1.284		1.228
		1.124	1.178	-1.298		1.231		1.119	1.184		1.178	1.231
	-1.231		1.177		1.125	1.211	-1.248		1.183	-1.290		1.234
		1.139	1.185	-1.272		1.198		1.128	1.188		1.142	1.216
	-1.234		1.187		1.162	1.217	-1.232		1.180	-1.271		1.206
		1.132	1.183	-1.295		1.229		1.125	1.179		1.176	1.223
	-1.205		1.168		1.128	1.211	-1.232		1.178	-1.289		1.232
		1.094	1.150	-1.263		1.195		1.142	1.187		1.164	1.227
	-1.230		1.162		1.159	1.211	-1.233		1.188	-1.292		1.228
		1.139	1.184	-1.285		1.222		1.130	1.182		1.134	1.213
	-1.201		1.170		1.123	1.204	-1.233		1.182	-1.265		1.200
		1.097	1.149	-1.265		1.194		1.140	1.187		1.168	1.217
	-1.232		1.165		1.168	1.217	-1.230		1.185	-1.290		1.229
		1.140	1.186	-1.287		1.227		1.140	1.185		1.133	1.211
	-1.209		1.175		1.128	1.207	-1.232		1.186	-1.264		1.198
		1.109	1.159	-1.277		1.202		1.136	1.184		1.172	1.218
	-1.236		1.172		1.161	1.219	-1.205		1.171	-1.293		1.233
		1.141	1.189	-1.278		1.219		1.108	1.156		1.146	1.220
	-1.207		1.174		1.156	1.217	-1.227		1.168	-1.289		1.218
		1.105	1.156	-1.298		1.227		1.142	1.185		1.158	1.223
	-1.216		1.161		1.147	1.222	-1.198		1.170	-1.272		1.215
		1.139	1.178	-1.295		1.221		1.108	1.153		1.159	1.215

9. Manually calculate the average of the four internal angles. This average represents the current internal angle of the SGC. In the example above, the internal angle of this SGC is about 1.19° and is out of the specified range of 1.16° +/- 0.02°.

10. If the average internal angle is not within the specified 1.16° +/- 0.02° range, the SGC's angle must be physically adjusted accordingly using the manufacturer's specified method. This adjustment often has to be done on a trial and error basis; some manufacturers have detailed documentation on changing the angle, so be sure to refer to that when possible. *State personnel **will not** perform the physical angle adjustment to contractor or consultant SGCs under any circumstances.*

11. When the angle is physically adjusted, repeat steps #2 – #10 after both molds have had a minimum of 30 minutes to reheat in the oven. This may take more than one additional attempt to get to the desired internal angle. Adjust the SGC's angle until the average of the four internal angles from the 22 mm HMS plate is at 1.16° +/- 0.02°. The SGC is now within internal angle specifications.

Gyratory Angle Calibration Frequency

The DAV-2 and HMS must be used a minimum of once every two years for gyratory angle calibration. It is suggested that this calibration take place during a material lab's inspection, which may be annually or biennially depending on how the individual district conducts its inspections. Routine monthly angle calibration verification of SGCs may be performed one of two ways:

1. Using the DAV-2 and HMS.

2. After the final angle is set and calibrated with the DAV-2 and HMS, an external angle verification procedure may be run according to the SGC manufacturer's specifications. If HMA is needed for this procedure, an N90 surface mix commonly used in the testing lab's area should be utilized. The external angle measurement from this procedure will become the reference angle for verification purposes. For example: the DAV-2 and HMS gives an internal angle of 1.16° and the external angle procedure gives an external angle of 1.23°. When verifying using the external angle from then on, the external angle should measure 1.23° +/- 0.02°. This method addresses concerns of possible mold wear due to the use of the DAV-2 and HMS as well as giving labs that do not own a DAV-2 an accepted method of routine gyratory angle verification.

Additional Instructions for Early Model Troxler 4140 Compactors

When mixless testing was first introduced, intermittent problems with consistency and reproducibility were noted during testing with some older Troxler 4140 compactors. It was later discovered that some early model 4140s (those with the sample chamber door that moves up and down) act in an unfriendly way when the DAV-2 and the HMS are used. It seems the load cell cannot react fast enough to reduce pressure when the ram head initially contacts the DAV-2 and HMS. This triggers an error in the load cell which essentially causes the compactor to apply excessive pressure; values as high as 1300 kPa have been recorded. This excessive pressure causes the internal angles drop significantly, often below 1.00°, making them unusable for calibration. Fortunately, this effect can be bypassed by using the alternate manual start procedure that follows:

1. Start data collection in the DAV-2. Load the DAV-2 and HMS into the mold, and place in the SGC sample chamber.

2. Hit the "MENU" button on the keypad. Hit "2" to adjust the maximum pressure setting. Type "200", then hit the "ENTER" key to input the value. Hit the "ESC" key to exit the menu.

3. Hit the manual "RAM DOWN" key on the keypad.

4. When the ram reaches ~130 mm, hit the "ESC" key to stop the ram. Make sure the ram head and collar are seated squarely in the top of the mold, with the pin on the collar fully down into the notch on the top of the mold.

5. Hit the "ANGLE ON" key to induce the angle. Be sure that the angle stop block (inside the compactor) fully engages. Hit the "ESC" key after the tray stops rotating.

6. Hit the "RAM DOWN" key. The ram will travel down and contact the DAV-2 and HMS. Hit the "ESC" key when the ram has stopped completely.

7. Hit the "MENU" button on the keypad. Hit "2" to adjust maximum pressure setting. Type "600", then hit the "ENTER" key to input the value. Hit the "ESC" key to exit the menu.

8. Hit the "START" button to use automatic compaction to complete the rest of the internal angle measurement.

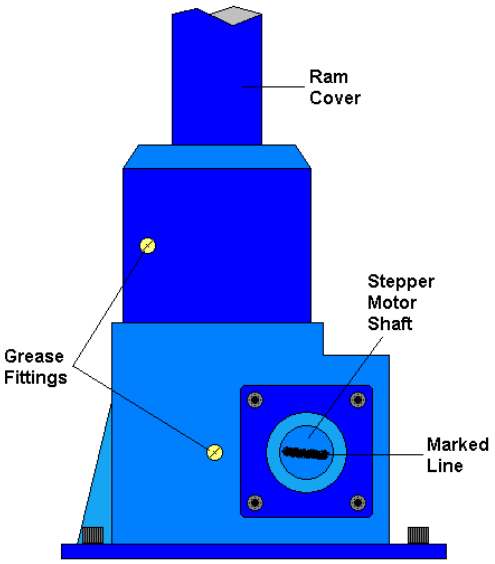

Troxler 4140 External Ram Assemby
(On top of the sample chamber)

9. Confirm that this procedure was effective by watching the end of the stepper motor shaft (illustration to the left) just above the sample chamber. When the compactor is gyrating, the end of the shaft should move clockwise and counterclockwise as much as one quarter of a turn as the pressure increases and decreases to adjust for the simulated loading that the HMS induces. Drawing a line on the end of the stepper motor shaft with a marker makes observing this motion easier. Enabling the pressure data collection feature on the compactor will also verify that the pressure is correct and will give a printout of pressure per gyration.

10. Repeat this procedure for each subsequent internal angle measurement.

Annual DAV-2 Calibration Verification

Calibration verification on the DAV-2 units will be performed by BMPR annually. The units are to be sent to the Central Bureau HMA Lab in the late fall or early winter after the construction season ends. The calibration verification will be performed and the units will be returned to the districts in time for winter mix design verifications and lab inspections.

Hints and Tips

1. Keep the DAV-2, the ram head, and the molds being used as clean as possible. Any debris on the bottom (or top) plate of the mold or on the ram head will have an effect on the angle when the bottom of the DAV-2 contacts it. A quick spray of WD-40 and a wipe down with a rag on the inside of the mold, the plate(s), and the ram head will ensure good angle data.

2. According to the DAV-2 manufacturer, mold temperature is important to collecting useful angle data. After two runs with the DAV-2 and HMS at 25 gyrations (i.e. one bottom and one top), the mold will have cooled enough that it could affect angle data. This is the reason for using two molds for calibration as outlined in previous pages.

3. While the standard hydraulic jack set up may be used for extruding the DAV-2 and other contents from the mold after testing, there is a more efficient way using Marshall molds. Start with a base plate, followed by a collar, then a mold, then another collar; then place your gyratory mold (with base plate) over the stack. This will give you enough height on most SGC molds to bring the gyratory mold base plate to the upper lip of the gyratory mold without coming out. Another Marshall base plate may be added to the top of the stack to give a little more height for taller gyratory molds (Troxler 4141, Pine compactors). This stack is also helpful in loading the DAV-2 into the mold without having to drop it down into the mold. Experiment to find the best setup to work with different models of SGCs.

4. Some early model Troxler 4140s have been noted to release the angle when the HMS is used. This is attributed to a worn main bearing in the compactor. This causes the angle stop block inside the compactor to start moving away from the fixed angle screw block that is supposed to be “pushing” it to keep the angle “on”. As the angle stop block moves farther away from the fixed angle screw block, the angle is reduced. This is seen mostly when using the 25.8 mm HMS plate or when the SGC exhibits excessive pressure. This issue shouldn’t be a problem when calibrating with the 22 mm HMS plate at 600 kPa (using the alternate manual start procedure), but it is good to be aware of the potential for this problem. A symptom of a worn main bearing can be observed during compaction of hot mix when the angle stop block inside the compactor “chatters” (causing a rapping noise) and can physically be seen moving a little bit during gyration. It seems to not be a problem when compacting hot mix as the angle will stay engaged despite the “chattering”, but this can pose a problem with HMS testing. While not recommended, the following technique has been used as a way to continue testing until the main bearing could be replaced. To physically keep the angle block engaged, a shop rag was first folded in half twice. When the compactor induced the angle, the protruding collar inside the compactor was gripped with the rag. Pressure was then applied in the opposite direction of gyration. This held the angle block in place and kept the angle “on”.

5. When calibrating the angle on a contractor or consultant’s SGC, be sure to let their personnel perform the physical angle adjustments when they are needed. This way the state is not held liable for any mechanical problems that may occur afterwards.

Illinois Department of Transportation

QC/QA Document
Segregation Control of Hot-Mix Asphalt

Appendix B20

Effective: May 1, 2007

1.0 SCOPE

1.1 This work shall consist of the visual identification and corrective action to prevent and/or correct segregation of hot-mix asphalt.

2.0 DEFINITIONS

2.1 Segregation. Areas of non-uniform distribution of coarse and fine aggregate particles in a hot-mix asphalt pavement.

2.2 End-of-Load Segregation. A systematic form of segregation typically identified by chevron-shaped segregated areas at either side of a lane of pavement, corresponding with the beginning and end of truck loads.

2.3 Longitudinal Segregation. A linear pattern of segregation that usually corresponds to a specific area of the paver.

2.4 Severity of Segregation.

2.4.1 Low. A pattern of segregation where the mastic is in place between the aggregate particles; however, there is slightly more coarse aggregate in comparison with the surrounding acceptable mat.

2.4.2 Medium. A pattern of segregation that has significantly more coarse aggregate in comparison with the surrounding acceptable mat and which exhibits some lack of mastic.

2.4.3 High. A pattern of segregation what has significantly more coarse aggregate in comparison with the surrounding acceptable mat and which contains little mastic.

3.0 PROCEDURE

3.1 When medium or high segregation of the mixture is identified by the Contractor, the Engineer, or the daily evaluation, the following specific corrective actions shall be taken as soon as possible. The corrective actions shall be reported to the Engineer before the next day's paving proceeds.

3.1.1 End of Load Segregation. When medium or high end of load segregation is identified, the following actions as a minimum shall be taken.

3.1.1.1 Trucks transporting the mixture shall be loaded in multiple dumps. The first against the front wall of the truck bed and the second against the tailgate in a manner which prevents the coarse aggregate from migrating to those locations.

3.1.1.2 The paver shall be operated so the hopper is never below 30 percent capacity between truck exchanges.

3.1.1.3 The “Head of Material” in the auger area shall be controlled to keep a constant level, with a 1 inch ±25 mm tolerance.

3.1.2 Longitudinal Segregation. When medium or high longitudinal segregation is identified, the Contractor shall make the necessary adjustment to the slats, augers or screeds to eliminate the segregation.

3.2 When the corrective actions initiated by the Contractor are insufficient in controlling medium or high segregation, the Contractor and Engineer will investigate to determine the cause of the segregation.

When an investigation indicates additional corrective action is warranted, the Contractor shall implement operational changes necessary to correct the segregation problems.

Any verification testing necessary for the investigation will be performed by the Department according to the applicable project test procedures and specification limits.

3.3 The District Construction Engineer will represent the Department in any dispute regarding the application of this procedure.

Determination of Reclaimed Asphalt Pavement (RAP) Aggregate Bulk (Dry) Specific Gravity (Gsb) Appendix B21

Effective: May 1, 2007
Revised: April 1, 2011

1. GENERAL

If the RAP consists of natural aggregates only, the RAP aggregate bulk specific gravity shall be as follows:

District	RAP Gsb
1 & 2	2.660
3 - 9	2.630

If the RAP contains slag aggregate the following procedure shall be used by an independent AASHTO accredited laboratory to determine the RAP aggregate bulk specific gravity (G_{sb}).

2. SUMMARY of METHOD

A representative slag RAP sample shall be thoroughly prepared prior to testing by reheating and remixing the reclaimed material. A solvent extraction, including washed gradation for Department comparison, and two maximum theoretical specific gravity (G_{mm}) tests are performed so that an effective specific gravity (G_{se}) can be calculated. The G_{se} value is used in the calculation to determine the bulk specific gravity (G_{sb}) of the RAP.

3. SAMPLING

The slag RAP stockpile, in its final usable form, shall be sampled by obtaining a minimum of five representative samples from the slag RAP stockpile. The samples shall be thoroughly blended and split into two- 20,000 gram samples. One of the samples shall be submitted to an independent AASHTO accredited IDOT approved laboratory for the subsequent preparation and testing as specified herein. The other sample shall be submitted to the Department for optional verification testing.

4. EQUIPMENT

Equipment including oven balances, HMA sample splitter, vacuum setup and solvent extractor shall be according to the HMA QC/QA Laboratory Equipment document in the Manual of Test Procedures for Materials. In addition the following equipment will also be required:

A. Sample pans - Large, flat and capable of holding 20,000 grams of RAP material.
B. Chopping utensil – Blade trowel or other utensil used to separate the large conglomerations of a RAP sample into a loose-flowing condition.

Determination of Reclaimed Asphalt Pavement (RAP)
Aggregate Bulk (Dry) Specific Gravity (Gsb)
Appendix B21
(continued)

Effective: May 1, 2007
Revised: April 1, 2011

5. RAP SAMPLE PREPARATIONS

A. Transfer the entire 20,000 gram sample into a large flat pan(s).
B. Place sample into a preheated oven at 230 ± 9° F. (110 ± 5° C.) and heat for 30 to 45 minutes.
C. Remove the sample from the oven and begin breaking up the larger conglomerations of RAP with the chopping utensil.
D. As the material begins to soften, blend the heated RAP by mixing the freshly chopped material with the fines in the pan.
E. Return the RAP into the oven and continue heating for another 15 - 20 minutes.
F. Remove the RAP from the oven and repeat the chopping of the conglomerations and blending of the fines until the RAP sample is homogeneous and conglomerations of fine aggregate complies with Illinois Modified AASHTO T-209.
G. Place the loose RAP into a hopper or pan and uniformly pour it through a riffle splitter. Take each of the halves and re-pour through the splitter. Thoroughly blend the sample by repeating this process 2 - 3 times.

6. TESTING

A. Percent Asphalt Binder P_b:
   1. Split out a 1,500 - 2,000 gram prepared RAP sample.
   2. Dry the RAP sample to a constant weight in an oven at 230 ± 9° F. (110 ± 5° C.).
   3. Determine the P_b of the dried RAP sample according to Illinois Modified T 164. Record the P_b.

B. Maximum Specific Gravity determination, G_{mm}:
   1. Split out one 3,000 gram prepared RAP sample.
   2. Dry the sample to a constant weight in an oven at 230 ±9° F. (110 ± 5° C.) While drying, chop and break up the sample as you would with a standard G_{mm} sample. Record as “dry RAP mass”.
   3. Place the sample in 295° ± 5° F. (146° ± 3° C.) oven for one hour.
   4. Add 1.5 percent virgin asphalt binder (PG64-22 or PG58-22) at 295° ± 5° F. (146° ± 3° C.), based on the “dry RAP mass” from step 6.B.2, to the RAP and thoroughly mix at 295° ± 5° F. (146° ± 3° C.) to ensure uniform coating of all particles.
   5. Split sample into two equal samples.
   6. Determine the G_{mm} of the prepared RAP samples according to Illinois Modified AASHTO T209.
   7. Calculate the individual G_{mm} values. The average result will be used in the calculation provided the individual results do not vary by more than 0.011. If the individual results vary more than 0.011, repeat steps in 6.B., discard the high and low values and average the remaining individual results provided they do not vary more than 0.011. If remaining individual results vary more than 0.011 repeat steps in 6.B. until individual results compare within 0.011.

Determination of Reclaimed Asphalt Pavement (RAP)
Aggregate Bulk (Dry) Specific Gravity (Gsb)
Appendix B21
(continued)

Effective: May 1, 2007
Revised: April 1, 2011

7. CALCULATIONS

A. Calculate the "adjusted P_b" of the RAP to account for the addition of the 1.5 percent virgin asphalt binder as follows:

1. Calculate "mass of RAP Asphalt Cement (AC)":

$$\textit{Mass of RAP AC} = \textit{Dry RAP mass} \times \frac{P_b}{100}$$

2. Calculate "mass of virgin AC added":

Mass of virgin AC added = 0.015 x Dry RAP mass

3. Determine "New RAP mass":

New RAP mass = Dry RAP mass + Mass of virgin AC added

4. Calculate "Adjusted P_b":

$$\textit{Adjusted } P_b = \frac{\textit{Mass of RAP AC} + \textit{Mass of virgin AC added}}{\textit{New RAP Mass}} \times 100$$

B. Calculate the effective specific gravity (G_{se}) of the RAP:

$$G_{se}\ (RAP) = \frac{(100 - \textit{Adjusted } P_b)}{\left(\frac{100}{G_{mm}} - \frac{\textit{Adjusted } P_b}{1.040}\right)}$$

C. Calculate the stone bulk gravity (G_{sb}) of the RAP:

$$G_{sb}\ (RAP) = G_{se}\ (RAP) - 0.100$$

<u>Example w/ 1.5% virgin asphalt binder added:</u>

- Dry RAP mass = 3,000 g
- P_b, (% AC) in RAP = 4.9%
- Determine "mass of RAP AC":
  - *Mass of RAP AC = Dry RAP mass x (P_b / 100)*
    = 3,000 x (4.9% / 100)
    = 147 grams

Determination of Reclaimed Asphalt Pavement (RAP)
Aggregate Bulk (Dry) Specific Gravity (Gsb)
Appendix B21
(continued)

Effective: May 1, 2007
Revised: April 1, 2011

- Add 1.5 percent virgin AC:
  - Determine "mass of virgin AC added":

    Mass of virgin AC added = 0.015 x Dry RAP mass
    = 0.015 x 3,000 grams
    = 45 grams

  - Determine "New RAP mass":

    New RAP mass = Dry RAP mass + Mass of virgin AC added
    = 3,000 + 45
    = 3,045 grams

- Calculate "Adjusted P_b":

$$\text{Adjusted } P_b = \frac{Mass\ of\ RAP\ AC + Mass\ of\ virgin\ AC\ added}{New\ RAP\ Mass} \times 100$$

$$= \frac{147\ grams + 45\ grams}{3{,}045\ grams} \times 100 = 6.3\%$$

- Calculate G_{se}:

$$G_{se} = \frac{100 - P_b}{\frac{100}{G_{mm}} - \frac{P_b}{1.04}} = \frac{100 - 6.3}{\frac{100}{2.505} - \frac{6.3}{1.04}} = \frac{93.7}{39.9 - 6.1} = 2.772$$

Adjusted P_b = 6.3%
Rice Test, G_{mm} = 2.505

- Calculate Slag RAP G_{sb}:

$$G_{sb} = G_{se} - 0.10 = 2.772 - 0.10 = 2.672$$

Illinois Department of Transportation

Use of Correction Factors for Adjusting the Gradation of Cores to Estimate the Gradation of the In-Place Pavement

Appendix B22
Effective January 31, 2008
Revised January 1, 2014

GENERAL

When cores are removed from a pavement, and a solvent extraction or ignition oven burn is conducted on the cored material, the gradation of the resulting aggregate is finer than the original pavement because the perimeter of the core was cut by the core barrel. Also, breakdown may occur as a result of the aggregate being subjected to the high temperatures in the ignition oven. The following Core Correction Factors are used to estimate the gradation of the in-place pavement from the gradation of the core after a solvent extraction or an ignition oven burn has been conducted. The Core Correction Factors were determined from four-inch diameter cores cut from 150 mm gyratory compacted lab specimens. The six-inch Factors were estimated from the four-inch Factors.

APPLICABLE DOCUMENTS

- Illinois-modified AASHTO T 30, Mechanical Analysis of Extracted Aggregates
- Illinois-modified AASHTO T 164, Quantitative Extraction of Bitumen from Bituminous Paving Mixtures
- Illinois-modified AASHTO T 308, Determining the Asphalt Binder Content of Hot-Mix Asphalt (HMA) by the Ignition Method

FOUR-INCH AND SIX-INCH CORE CORRECTION FACTORS

	Percent Passing							
	EXTRACTION				IGNITION OVEN *			
Sieve	BINDER		SURFACE		BINDER		SURFACE	
	4-inch	6-inch	4-inch	6-inch	4-inch	6-inch	4-inch	6-inch
1" / 25.0mm	0.0	0.0	0.0	0.0	0.0	0.0	0.0	0.0
3/4" / 19.0mm	1.0	0.7	0.0	0.0	0.0	0.0	0.0	0.0
1/2" / 12.5mm	1.5	1.0	0.0	0.0	2.3	1.5	0.0	0.0
3/8" / 9.5mm	1.4	0.9	0.0	0.0	2.5	1.7	0.1	0.1
#4 / 4.75mm	0.9	0.6	2.2	1.5	1.9	1.3	2.1	1.4
#8 / 2.36mm	0.7	0.5	1.0	0.7	1.0	0.7	0.9	0.6
#16 / 1.18mm	0.6	0.4	0.6	0.4	0.7	0.5	0.6	0.4
#30 / 0.600mm	0.4	0.3	0.4	0.3	0.5	0.3	0.5	0.3
#50 / 0.300mm	0.4	0.3	0.4	0.3	0.4	0.3	0.3	0.2
#100 / 0.150mm	0.3	0.2	0.2	0.1	0.3	0.2	0.3	0.2
#200 / 0.075mm	0.17	0.11	0.16	0.11	0.20	0.13	0.20	0.13

The gradation of the aggregate from the extraction or ignition oven burn of the core is finer than the gradation of the original in-place pavement. Therefore, subtract the designated amount from the measured percent passing of the core to estimate the in-place gradation prior to coring.

* This testing was conducted on a limited number of aggregate sources. A larger amount of degradation in the ignition oven is possible from aggregates from other sources.

EXAMPLES

Given: 4-inch SURFACE mix cores where a SOLVENT EXTRACTION has been conducted.

	Percent Passing			
	EXTRACTION		Subtract Correction Factor from Extracted Gradation	Estimated In-place Pavement Gradation
Sieve	Extracted Gradation	Surface Correction Factor		
1" / 25.0mm	100.0	0.0	100.0 - 0.0	100.0
3/4" / 19.0mm	100.0	0.0	100.0 - 0.0	100.0
1/2" / 12.5mm	100.0	0.0	100.0 - 0.0	100.0
3/8" / 9.5mm	95.6	0.0	95.6 - 0.0	95.6
#4 / 4.75mm	60.6	2.2	60.6 - 2.2	58.4
#8 / 2.36mm	35.3	1.0	35.3 - 1.0	34.3
#16 / 1.18mm	23.8	0.6	23.8 - 0.6	23.2
#30 / 0.600mm	17.8	0.4	17.8 - 0.4	17.4
#50 / 0.300mm	12.8	0.4	12.8 - 0.4	12.4
#100 / 0.150mm	9.2	0.2	9.2 - 0.2	9.0
#200 / 0.075mm	7.10	0.16	7.10 - 0.16	6.94

Given: 4-inch BINDER mix cores where an IGNITION OVEN Burn has been conducted.

	Percent Passing			
	IGNITION OVEN		Subtract Correction Factor from Ignition Oven Gradation	Estimated In-place Pavement Gradation
Sieve	Ignition Oven Gradation	Binder Correction Factor		
1" / 25.0mm	100.0	0.0	100.0 - 0.0	100.0
3/4" / 19.0mm	97.9	0.0	97.9 - 0.0	97.9
1/2" / 12.5mm	77.2	2.3	77.2 - 2.3	74.9
3/8" / 9.5mm	63.6	2.5	63.6 - 2.5	61.1
#4 / 4.75mm	38.5	1.9	38.5 - 1.9	36.6
#8 / 2.36mm	25.0	1.0	25.0 - 1.0	24.0
#16 / 1.18mm	18.1	0.7	18.1 - 0.7	17.4
#30 / 0.600mm	14.0	0.5	14.0 - 0.5	13.5
#50 / 0.300mm	10.1	0.4	10.1 - 0.4	9.7
#100 / 0.150mm	6.9	0.3	6.9 - 0.3	6.6
#200 / 0.075mm	5.60	0.20	5.60 - 0.20	5.40

Given: 6-inch SURFACE mix cores where a SOLVENT EXTRACTION has been conducted.

	Percent Passing			
	EXTRACTION		Subtract Correction Factor from Extracted Gradation	Estimated In-place Pavement Gradation
Sieve	Extracted Gradation	Surface Correction Factor		
1" / 25.0mm	100.0	0.0	100.0 - 0.0	100.0
3/4" / 19.0mm	100.0	0.0	100.0 - 0.0	100.0
1/2" / 12.5mm	100.0	0.0	100.0 - 0.0	100.0
3/8" / 9.5mm	95.6	0.0	95.6 - 0.0	95.6
#4 / 4.75mm	60.6	1.5	60.6 - 1.5	59.1
#8 / 2.36mm	35.3	0.7	35.3 - 0.7	34.6
#16 / 1.18mm	23.8	0.4	23.8 - 0.4	23.4
#30 / 0.600mm	17.8	0.3	17.8 - 0.3	17.5
#50 / 0.300mm	12.8	0.3	12.8 - 0.3	12.5
#100 / 0.150mm	9.2	0.1	9.2 - 0.1	9.1
#200 / 0.075mm	7.10	0.11	7.10 - 0.11	6.99

Off-Site Preliminary Test Strip and Modified Start-Up Procedures
Appendix B23

Effective Date: April 1, 2010

When required, an off-site preliminary test strip and modified start-up shall be performed as follows:

(a) Team Members. The start-up team, if required, shall consist of the following:

(1) Resident Engineer
(2) District Construction Supervising Field Engineer, or representative
(3) District Materials Mixtures Control Engineer, or representative
(4) District Nuclear Density Gauge Tester
(5) Contractor's QC Manager
(6) Bureau of Materials and Physical Research representative
(7) Bureau of Construction representative
(8) Contractor's Density Tester
(9) Asphalt Binder Supplier representative

(b) Communication. The Contractor shall advise the team members of the anticipated start time of production for both the off-site preliminary test strip and subsequent modified start-up for both the surface and binder courses. The QC Manager shall direct the activities of the start-up team. A Department-appointed representative from the start-up team will act as spokesperson for the Department.

(c) Off-site Preliminary Test Strip. The off-site preliminary test strip shall consist of 272 metric tons (300 tons). It shall contain two growth curves which shall be tested as outlined herein.

(1) Mix and Gradation Test Strip Samples. The first and second sets of mixture and gradation samples shall be taken by the Contractor at such times as to represent the mixture of the two growth curves, respectively. All off-site preliminary test strip samples shall be processed by the Contractor for determination of mixture composition and air voids. This shall include washed ignition gradation and asphalt content test results. This information shall then be compared to the JMF and required design criteria.

(2) Compaction Equipment. It shall be the responsibility of the QC manager to verify roller compliance before commencement of growth curve construction.

All rolling equipment intended for use on a project shall be utilized on the off-site preliminary test strip.

Off-Site Preliminary Test Strip and Modified Start-Up Procedures
Appendix B23
(continued)

(3) Constructing the Off-site Preliminary Test Strip. After the Contractor has produced the mix, transported the mix, and placed approximately 90 to 140 metric tons (100 to 150 tons) of mix, placement of the mix shall stop, and a growth curve shall be constructed. After completion of the first growth curve, paving shall resume for 45 to 90 metric tons (50 to 100 tons) of mix, placement shall stop, and the second growth curve shall be constructed within this area. Additional growth curves may be required if an adjustment/plant change is made during the off-site preliminary test strip. The Contractor shall use the specified rolling procedures for all portions of the test strip except for the growth curve areas which shall be compacted as directed by the QC Manager.

(4) Location of Off-site Preliminary Test Strip. The off-site preliminary test strip shall be located on a pavement type similar to the contract pavement and acceptable to the Engineer. It shall be on a relatively flat portion of the roadway.

(5) Compaction Temperature. In order to make an accurate analysis of the density potential of the mixture, the temperature of the mixture on the pavement at the beginning of the growth curve shall be not less than the minimum mixture placement temperature specified herein. The mat temperature, at the location of the each growth curve, shall be monitored throughout the construction of each growth curve.

(6) Compaction and Testing. The QC manager shall specify the roller(s) speed and number of passes required to obtain a completed growth curve. The nuclear gauge shall be placed near the center of the hot mat and the position marked for future reference. With the bottom of the nuclear gauge and the source rod clean, a one-minute nuclear reading (without mineral filler) shall be taken after each pass of the roller. Rolling shall continue until the maximum density is achieved and three consecutive passes show no appreciable increase in density or no evidence of destruction of the mat. The growth curve shall be plotted. No testing of initial passes shall be taken until the third pass is completed.

(7) Final Testing. After the growth curve information is obtained, a final nuclear reading, using mineral filler to eliminate surface voids, shall be taken at the marked position. This reading is used to adjust the maximum density reading obtained during the growth curve.

(8) Evaluation of Growth Curves. Mixtures which exhibit density potential outside of the specified density range shall be considered as sufficient cause for mix adjustment. If a mix adjustment is made, an additional test strip may be constructed, and associated tests shall be performed. This information shall then be compared to the AJMF and required design criteria.

If the density potential of the mixture not meet the minimum specified, the operation shall cease until all test data is analyzed or a new mix design is produced.

In addition, other aspects of the mixture, such as appearance, segregation, texture, or other evidence of mix problems, should be noted and corrective action taken at this time.

Off-Site Preliminary Test Strip and Modified Start-Up Procedures
Appendix B23
(continued)

(d) Documentation. All off-site preliminary test strip, modified start-up, and rolling pattern information (including growth curves) will be tabulated by the QC manager with copies provided to each team member, and the original retained in the project files. Any changes to the rolling pattern shall be by the Contractor and the Engineer and recorded.

(e) Modified Start-Up. At the start of placement on the jobsite, the Contractor shall construct a growth curve in between the first 90 to 140 metric tons (100 to 150 tons) for the purposes of evaluating the properties of the mixture and ensuring that the established rolling pattern was valid.

The placement shall stop until the growth curve has been evaluated. A hot-bin or a combined aggregate belt sample and a mix sample representative of the growth curve shall be obtained and tested expediently for determination of mix composition and air voids. This information shall then be compared to the preliminary test strip data.

If the growth curve and visual evaluation of the mix are satisfactory, the placement may be resumed. If the growth curve and visual evaluation of the mix are unsatisfactory, placement shall remain on hold until the plant samples are completed and reviewed by the QC Manager and the Engineer. If agreed by the Engineer, the Contractor shall make appropriate adjustments, resample and retest, construct another growth curve, and evaluate the mixture. This procedure will be followed until satisfactory test results are obtained.

This Page Reserved

Illinois Department of Transportation

Determination of Residual Asphalt in Prime and Tack Coat Materials
Appendix B24

Effective: March 1, 2013

A. Purpose

This procedure provides a means for determining the amount of asphalt binder remaining after a tack coat or prime coat cures. The remaining asphalt binder is termed residual asphalt. This procedure shall be used for verifying specification compliance when the tack coat or prime coat application rate is specified based on residual asphalt.

B. Procedure

11. Cut and label a 12.0 inch by 12.0 inch square piece of non-woven geotextile fabric or cardboard. Place the square in a 230 ± 9 °F (110 ± 5 °C) oven and dry to constant weight. Remove the square from the oven and record the weight W_i to the nearest 0.1 gram within 5 minutes after removal.

Notes:

- *Oven drying is necessary because cardboard especially can retain considerable moisture in humid conditions.*
- *The fabric or cardboard used for squares needs to 1) have sufficient thickness to prevent loss of asphalt and 2) allow sufficient absorption to prevent spillage.*
- *Constant weight is defined as the weight at which further drying does not alter the mass more than 0.5 gram in 1 hour.*

12. Place the pre-weighed square at a random transverse location prior to tack or prime coat application.

13. After the prime or tack has been applied, remove the square from the pavement and protect from damage during transport. Place the square in a 230 ± 9 °F (110 ± 5 °C) oven and dry to a constant weight.

14. Remove the square from the oven and record the final weight W_f to the nearest 0.1 gram within 5 minutes after removal from the oven.

15. Subtract the initial weight W_i determined in step 1 from the final weight W_f determined in step 4. Divide this value by 454 to get the residual asphalt binder application rate in lbs/ ft^2.

    Residual Asphalt Application Rate = $(W_f - W_i) / 454$

This Page Reserved

+ILLINOIS DEPARTMENT OF TRANSPORTATION

MODEL QUALITY CONTROL PLAN FOR CONCRETE PRODUCTION

Effective: December 1, 1993
Revised: June 1, 2012

INSTRUCTIONS: The Contractor shall respond to all items addressed in this model. This is applicable to work performed by the Contractor or subcontractor(s). Examples are provided to assist the Contractor, and any innovations to the quality control process may be presented.

Part 1 is completed by the Contractor.

Part 2 is completed by the Contractor or Commercial Concrete Producer. For the Contractor, Part 2 is submitted annually, for the period which begins April 1st, and which expires the following year on March 31st. For a Commercial Concrete Producer, Part 2 shall remain in effect until the Producer submits an updated document or the District requests the Producer to update Part 2. (Note: A District may require Part 2 to be updated annually or at a longer interval.)

If Part 2 is approved by the Department's District office for a one year period, the Contractor shall either attach the approved Part 2 to each Quality Control Plan submitted, or shall state "The approved Part 2, for the period from mo/day/yr to mo/day/yr, is on file at the District office; the contents are fully and thoroughly understood, and the contents are a part of this Contract." When Part 2 has been completed by the Commercial Concrete Producer, the Contractor shall not make any revisions. However, the Contractor and Commercial Concrete Producer have the option to amend Part 2 for a specific project, and submit it to the Department's District office for approval.

QUALITY CONTROL PLAN
CONCRETE

County: _____
Section: _____
Route: _____
District: _____
Contract No.: _____
Job No.: _____
Project: _____
Contractor: _____
P.O. Box: _____
Street Address: _____
City/State/Zip Code: _____
Telephone No.: _____
Fax No.: _____

CONTRACTOR RESPONSIBILITIES

This Quality Control plan explains how _____ proposes to control the equipment, materials, and production methods to ensure the specified product is obtained.

PART 1 - QUALITY CONTROL PLAN AT THE JOBSITE

I. FIELD OFFICE

Location: _____

Contact Person: _____

Telephone Number: _____

In the event of field equipment failure, _____ will provide back up equipment.

II. FIELD QUALITY CONTROL PERSONNEL

Individual's Name: _____

Department Training: _____

Company Name: _____

Telephone Number: _____

_____ Primary or _____ Back Up

The Level II PCC Technician who will be responsible for plant mixture control and adjustments is indicated in Part 2.

_____ is the Level I PCC Technician who will be responsible for jobsite mixture control and adjustments.

_____ is the Quality Control Manager who will be responsible for overall project quality control.

III. FIELD SAMPLING AND TESTING

INSTRUCTIONS: Indicate whether beams and/or cylinders will be cast, as well as how the specimens will be initially cured.

Note: In some instances, such as Articles 503.05 and 503.06, only a flexural strength is specified. An equivalent compressive strength may be used if approved by the Engineer.

Example:

Plastic cylinder molds [6 by 12 in. (152 by 305 mm)] will be used to cast strength specimens. The plastic cylinder mold will be covered with a plastic cylinder lid. A curing box will be used to maintain the specimens within 60 to 80° F (16 to 27° C). The specimens will be transported after 24 hours for standard curing.

INSTRUCTIONS: Indicate the final location for standard curing and testing of the strength specimens, and the method of curing.

Example:

The strength specimens will be transported to the consultant's lab for standard curing in a water storage tank, and testing.

IV. FAILING TESTS AND DEFECTIVE WORK

INSTRUCTIONS: Indicate the communication procedures between the Commercial Concrete Producer, the Contractor, and Department personnel in the event of failing tests or observation of defective work. This may also be in flow chart form.

Example:

In the event of failing tests or observation of defective work at the jobsite, the Level I PCC Technician will be responsible for notifying the Superintendent and the Quality Control Manager. The Superintendent will be responsible for notifying the Resident Engineer.

In the event of failing tests at the plant, the Level II PCC Technician will be responsible for notifying the Superintendent and the Quality Control Manager. The Superintendent will be responsible for notifying the Resident Engineer.

V. COMMUNICATION

INSTRUCTIONS: For concurrent pours, indicate how each Concrete Tester will be able to contact the Level I PCC Technician.

Indicate how jobsite personnel will be able to contact the Level II PCC Technician.

Example:

For concurrent pours, each Concrete Tester will be able to contact the Level I PCC Technician by two-way radio. Jobsite personnel will use two-way radio to contact the Level II PCC Technician, when he/she is at the plant. When the Level II PCC Technician is not at the plant, jobsite personnel and the Level II PCC Technician will use a cellular phone.

VI. FIELD DOCUMENTATION

INSTRUCTIONS: Indicate the forms, the bound hardback field books, and bound hardback diaries that will be used to maintain documentation at the jobsite.

Example:

A bound hardback field book will be used for all documentation at the jobsite.

VII. PRE-POUR MEETING

INSTRUCTIONS: Indicate when a bridge deck pre-pour meeting will be scheduled. Meetings for other important pours are encouraged.

Examples:

A meeting will be scheduled the day before the bridge deck pour to discuss mix, concrete delivery, pumped concrete, finishing equipment and requirements, labor, deficiencies, curing, weather conditions (i.e. temperature, humidity, wind), and other pertinent issues.

Or

A meeting will be scheduled two months, two weeks, and two days before the bridge deck pour. The meetings will discuss mix, concrete delivery, pumped concrete, finishing equipment and requirements, labor, deficiencies, curing, weather conditions (i.e. temperature, humidity, wind), and other pertinent issues.

PART 2 - QUALITY CONTROL PLAN AT THE CONCRETE PLANT

If applicable:

Department Producer/Supplier Number: _____

Commercial Concrete Producer:_____

P.O. Box:_____

Street Address:_____

City/State/Zip Code: _____

Telephone Number:_____

I. MATERIALS

INSTRUCTIONS: The wording for "A) Aggregates" is provided for the Contractor. Indicate the material sources for "B) Coarse Aggregates" and "C) Fine Aggregates". If applicable, attach proposed mix plant gradation bands in accordance with the Department's "Development of Gradation Bands on Incoming Aggregate at Mix Plants."

A) Aggregates

Certified aggregate gradation bands (including master band, if required) will be obtained from the aggregate source for all certified aggregates, prior to any shipment of material to the plant.

B) Coarse Aggregates

Material: (Example: CA 11 - Crushed Stone)

ASTM C 1260 Expansion: _____(This is not required for limestone or dolomite aggregate.)

Department Producer/Supplier Number: _____

Company Name: _____

Company Address: _____

Contact Person: _____

Telephone Number: _____

C) Fine Aggregates

Material: (Example: FA 01 - Natural Sand)

ASTM C 1260 Expansion: _____ (This is not required for limestone or dolomite aggregate.)

Department Producer/Supplier Number: _____

Company Name: _____

Company Address: _____

Contact Person: _____

Telephone Number: _____

D) Aggregate Stockpiling and Handling

INSTRUCTIONS: Aggregates shall be stockpiled and handled in a manner which minimizes segregation and degradation, prevents contamination, and produces a uniform gradation, before placement in the plant bins. This is according to Articles 106.06, 106.07, 1003.01 (e), 1004.01 (e), 1004.02 (d), and 1020.10, of the Standard Specifications for Road and Bridge Construction (January 1, 2012). Indicate the specific methods to be used.

Example:

Coarse aggregates are shipped by rail to the plant, in a uniform gradation condition. Upon delivery of the coarse aggregate, it will be transferred to a stockpile by a movable conveyor system. The stockpile will be built according to Article 1004.01 (e), of the Standard Specifications for Road and Bridge Construction (January 1, 2012).

Fine aggregates are shipped by truck to the plant, in a uniform gradation condition. The fine aggregate will be truck dumped into a stockpile. The truck stockpile will be built according to Article 1003.01 (e) of the Standard Specifications for Road and Bridge Construction (January 1, 2012).

All stockpiles will be separated with concrete block walls, sufficient in width, length, and height to prevent contamination. The maximum height of the walls will be ___ ft (___ m).

E) Uniform Aggregate Moisture

INSTRUCTIONS: According to Article 1020.10 of the Standard Specifications for Road and Bridge Construction (January 1, 2012), aggregates shall have a uniform moisture content before placement in the plant bins. Indicate the specific methods to be used.

Example:

Coarse and fine aggregates will be stockpiled and allowed to drain for 12 hours, before placement in the plant bins. However, during hot weather, the aggregate stockpiles will be periodically sprinkled with water.

F) Coarse Aggregate Moisture

INSTRUCTIONS: Indicate the frequency of coarse aggregate moisture testing to control production.

NOTE: Fine aggregate moisture testing is specified in the Special Provision for Quality Control/Quality Assurance of Concrete Mixtures.

G) Aggregate Gradation Samples

INSTRUCTIONS: Indicate how and where you will sample aggregates to assure they will meet current Department gradation specifications.

Example:

For aggregates arriving at the plant, truck-dump sampling will be performed for fine and coarse aggregate gradation tests.

For aggregates used during concrete production, on-belt sampling will be performed for fine and coarse aggregate gradation tests. The conveyor belt beneath the bin will be used.

H) Gradation Tests for Aggregates Arriving at the Plant

INSTRUCTIONS: Indicate the frequency of gradation testing for aggregates arriving at the plant, **to check the source**.

NOTE: The frequency of gradation testing **to check the production of concrete**, for aggregates stored at the plant in stockpiles or bins, is specified in the Special Provision for Quality Control/Quality Assurance of Concrete Mixtures.

II. PLANT AND DELIVERY TRUCKS

Plant Name: _____

Plant Location: _____

Producer No.: _____

NOTE: The plant and delivery trucks are to be approved according to the Bureau of Material and Physical Research's Policy Memorandum, "Approval of Concrete Plants and Delivery Trucks." Contact the Department's District office to obtain the required forms.

III. QUALITY CONTROL LABORATORY

Location: _____

Contact Person: _____

Telephone Number: _____

The quality control laboratory is ____ sq. ft. [The Department suggests 200 ft² (20 m²)].

The laboratory was approved on _____ by District __.

In the event of lab equipment failure, _____ will provide back up equipment.

IV. PLANT QUALITY CONTROL PERSONNEL

Individual's Name: _____

Department Training: _____

Company Name: _____

Telephone Number: _____

_____ Primary or _____ Back Up

NOTE: Include personnel who have been trained by the Level II PCC Technician to sample and test aggregate for moisture.

_____ is the Level II PCC Technician who will be responsible for plant mixture control and adjustments.

The Level I PCC Technician who will be responsible for jobsite mixture control and adjustments is indicated in Part 1.

The Quality Control Manager who will be responsible for overall project quality control is indicated in Part 1.

V. MIX DESIGNS

INSTRUCTIONS: Provide mix design information as stated in 1.1 "Volumetric Mix Design and Mix Design Submittal" of the Portland Cement Concrete Level III Technician Course – Manual of Instructions for Design of Concrete Mixtures.

Otherwise state: "Only mix designs previously verified by the Department will be used".

INSTRUCTIONS: Based on the ASTM C 1260 test information provided for the aggregates, indicate the mixture option selected for minimizing the risk of alkali-silica reaction. Refer to Article 1020.05(d).

VI. PLANT MIXTURE TESTING

INSTRUCTIONS: Indicate the plant start-up testing frequency, and the plant testing frequency thereafter, to control production. This is required for slump, air content, unit weight, yield, and temperature tests performed at the plant. Indicate any other tests that will be performed.

NOTE: Plant start-up situations are defined in the "Portland Cement Concrete Level II Technician Course" manual. Indicate if the manual's plant start-up situations will be applicable, or if other start-up situations will apply.

VII. PLANT SUPERVISION

INSTRUCTIONS: If the Level II will supervise more than one plant, indicate his/her attendance at the various plants for large or critical pours.

VIII. COMMUNICATION

INSTRUCTIONS: Indicate how plant personnel will be able to contact the Level II PCC Technician, when he/she is not at the plant.

Example:

Plant personnel will use a land phone, to contact the Level II PCC Technician by cellular phone.

IX. PLANT DOCUMENTATION

INSTRUCTIONS: Indicate the forms, the bound hardback field books, and bound hardback diaries that will be used to maintain documentation at the plant, and at the laboratory.

Example:

A loose-leaf binder will be used to maintain any Department form which is required at the plant, or at the laboratory. A bound hardback field book will be used to record test results at the plant, and at the laboratory. A bound hardback diary will be used to document observations, inspections, adjustments to the mix design, and corrective actions at the plant.

INSTRUCTIONS:

To be completed by Contractor. Return with Quality Control Plan.

QUALITY CONTROL PLAN SIGNATURE SHEET

(IF AN INDIVIDUAL)

Firm Name _____

Print Name of Owner _____

Signature of Owner _____

Date:_____

(IF A CO-PARTNERSHIP)

Firm Name _____

Print Name of Partner _____

Signature of Partner _____

Date:_____

(IF A CORPORATION)

Corporate Name _____

Print Name of Authorized Representative _____

Signature of Authorized Representative _____

Date:_____

(ALL)

Business Address:_____

P.O. Box:_____

Street Address:_____

City/State/Zip Code:_____

INSTRUCTIONS: The Contractor shall complete this section for Addendums to a Quality Control Plan.

QUALITY CONTROL PLAN ADDENDUM
CONCRETE

County: _____

Section: _____

Route: _____

District: _____

Contract No.: _____

Job No.: _____

Project: _____

Contractor: _____

P.O. Box: _____

Street Address: _____

City/State/Zip Code: _____

Telephone No.: _____

Fax No.: _____

ADDENDUMS

INSTRUCTIONS: Indicate and/or attach addendums to Contractor Quality Control Plan.

INSTRUCTIONS:

To be completed by Contractor. Return with any amended Quality Control Plan.

QUALITY CONTROL PLAN ADDENDUM SIGNATURE SHEET

(IF AN INDIVIDUAL)

Firm Name _____

Print Name of Owner _____

Signature of Owner _____

Date:_____

(IF A CO-PARTNERSHIP)

Firm Name _____

Print Name of Partner _____

Signature of Partner _____

Date:_____

(IF A CORPORATION)

Corporate Name _____

Print Name of Authorized Representative _____

Signature of Authorized Representative _____

Date:_____

(ALL)

Business Address:_____

P.O. Box:_____

Street Address:_____

City/State/Zip Code:_____

ILLINOIS DEPARTMENT OF TRANSPORTATION

QUALIFICATIONS AND DUTIES OF CONCRETE QUALITY CONTROL PERSONNEL

Effective: December 1, 1993
Revised: January 1, 2014

This document summarizes the qualifications and duties of quality control personnel for Portland Cement Concrete (PCC) mixtures, Cement Aggregate Mixture II (CAM II), and Controlled Low-Strength Material (CLSM). Duties shall be performed daily, or as required, according to the QC/QA specifications and related documents.

QUALITY CONTROL MANAGER: An individual who has the experience, responsibility, and authority to make decisions regarding quality control of Portland Cement Concrete, Cement Aggregate Mixture II, and Controlled Low-Strength Material. This individual is required to have successfully completed the Department's Portland Cement Concrete Level I Technician Course, the Portland Cement Concrete Level II Technician Course, and either the 3-day Mixture Aggregate Technician Course or 5-day Aggregate Technician Course.

Duties:

1. Understand the specifications and related documents regarding QC/QA. Read the Quality Control Plan and any amendments to the Plan.

2. Manage overall project quality control.

3. Ensure the laboratory, concrete plant, and delivery trucks are approved by the Engineer.

4. Ensure the test equipment is maintained and calibrated as required by the appropriate test procedure.

5. Ensure the mixture meets the requirements of the specifications.

6. Ensure good communication between the plant and jobsite to quickly resolve quality control problems. Failure to resolve quality control problems shall result in mixture production suspension.

7. Ensure the Engineer is notified of any material supply problems.

8. Ensure the Engineer is immediately notified of any failing tests and subsequent remedial action. Ensure passing tests are reported no later than the start of the next work day. Consult with the Engineer when questions arise concerning acceptance or rejection of materials.

9. Ensure all observations, inspections, adjustments to the mix design, test results, retest results, and corrective actions are documented promptly, and in the specified format. Ensure form MI504M, form MI654, and form MI655 are submitted to the Engineer weekly, or as required by the Engineer.

10. Supervise the Level III PCC Technician, Level II PCC Technician, Level I PCC Technician, Concrete Tester, Gradation Technician, Mixture Aggregate Technician, and Aggregate Technician.

11. Ensure sufficient personnel are provided to perform the required inspections, sampling, testing, and documentation. Ensure work is accurate and done in a timely manner.

LEVEL III PCC TECHNICIAN: An individual who has successfully completed the Department's Portland Cement Concrete Level I Technician Course, the Portland Cement Concrete Level II Technician Course, the Portland Cement Concrete Level III Technician Course, and either the 3-day Mixture Aggregate Technician Course or 5-day Aggregate Technician Course.

Duties:

1. Understand the specifications and related documents regarding QC/QA. Read the Quality Control Plan and any amendments to the Plan.

2. Read contract special provision(s) for project specific mix design information.

3. Obtain component materials' specific gravities and absorptions (aggregates).

4. Ensure coarse aggregate voids tests are performed when necessary to calculate mix design batch weights (mass). NOTE: The Level III PCC Technician may train anyone to sample and test coarse aggregate voids, provided the individual is monitored on a daily basis by the Level III PCC Technician. This is not applicable to aggregate sampling and testing for gradation, or to any other type of test.

5. Determine the correct proportions of aggregates, cement, finely divided minerals, water, admixtures, and fiber reinforcement per cubic yard (meter).

6. Evaluate results when a trial mixture is performed.

7. Supervise a trial batch when requested by the Engineer.

8. Ensure the mix design is verified by the Engineer.

9. Ensure the mix design meets specification requirements during construction. If not, take appropriate action and re-submit to the Engineer.

LEVEL II PCC TECHNICIAN: An individual who has successfully completed the Department's Portland Cement Concrete Level I Technician Course, the Portland Cement Concrete Level II Technician Course, and either the 3-day Mixture Aggregate Technician Course or 5-day Aggregate Technician Course.

Duties:

1. See Level I PCC Technician duties.

2. Check the operation of the concrete plant and condition of the delivery trucks.

3. Ensure only materials approved by the Department are used.

4. Obtain and split aggregate samples.

5. Perform gradation test for coarse and fine aggregates. If test results are near specification limits or unsatisfactory, take appropriate action and retest when applicable.

6. Perform aggregate moisture tests to adjust mix design aggregate batch weights (mass). NOTE: The Level II PCC Technician may train anyone to sample and test aggregate for moisture, provided the individual is monitored on a daily basis by the Level II PCC Technician. This is not applicable to aggregate sampling and testing for gradation, or to any other type of test.

7. Verify the specified mix design is used, and the correct proportions of aggregates, cement, finely divided minerals, water, admixtures, and fiber reinforcement are batched.

8. Control water/cement ratio by determining the allowable quantity of water which can be added at the jobsite.

9. Maintain communications with jobsite personnel to control the mixture, for compliance with the specifications.

10. Supervise the Gradation Technician, or assign the task to the Mixture Aggregate Technician or Aggregate Technician.

LEVEL I PCC TECHNICIAN: An individual who has successfully completed the Department's Portland Cement Concrete Level I Technician Course.

Duties:

1. Understand the specifications and related documents regarding QC/QA. Read the Quality Control Plan and any amendments to the Plan.

2. Maintain and calibrate test equipment as required by the appropriate test procedure.

3. Sample the mixture.

4. Perform temperature, slump, slump flow (self-consolidating concrete (SCC)), flow (CLSM), J-Ring (SCC), L-Box (SCC), hardened visual stability index (SCC), dynamic segregation index (SCC), and air content tests and compare with specifications. If test results are unsatisfactory or near specification limits, take appropriate action and retest when applicable.

5. Perform unit weight test and determine yield.

6. Make strength and static segregation (SCC) specimens. Transport strength specimens properly and ensure correct curing. Break strength specimens. NOTE: If an individual has the responsibility of breaking strength specimens only, such as at a consultant's laboratory, this individual is required to have the Level I PCC Technician training or the Concrete Strength Testing Technician certification by the American Concrete Institute (ACI).

7. Monitor truck revolutions and haul time.

8. Determine the required quantity of water and admixtures for adjusting the mixture, to meet specifications and field conditions.

9. Observe the discharge of a mixture by the delivery truck, and take appropriate action if a problem is identified.

10. For a mixture which is not mixed on the jobsite, ensure the required information is recorded on the delivery truck ticket.

11. Document all observations, inspections, adjustments to the mix design, test results, retest results, and corrective actions promptly, and in the specified format.

12. Maintain communications with plant personnel to control the mixture, for compliance with the specifications.

13. Notify the Engineer of test results.

14. Report test results to the Quality Control Manager.

15. Supervise the Concrete Tester.

CONCRETE TESTER: An individual who has successfully completed the Department's Portland Cement Concrete Tester Course. The Concrete Tester shall be monitored on a daily basis by the Level I or the Level II PCC Technician when performing tests.

Duties:

1. Sample the mixture.

2. Perform temperature, slump, slump flow (self-consolidating concrete (SCC)), flow (CLSM), J-Ring (SCC), L-Box (SCC), hardened visual stability index (SCC), dynamic segregation index (SCC), air content and unit weight tests.

3. Make strength and static segregation (SCC) specimens.

4. Monitor truck revolutions and haul time.

5. Observe the mixture and notify the Level I or Level II PCC Technician of any problems.

6. Assist the Level I or Level II PCC Technician with adjustments to a mixture, by adding water or an admixture.

7. For a mixture which is not mixed on the jobsite, ensure the required information is recorded on the delivery ticket.

8. Document all observations, inspections, adjustments to the mix design, test results, retest results, and corrective actions promptly, and in the specified format.

9. Report truck revolutions, haul time, and test results to the Level I or Level II PCC Technician. Immediate notification is required if truck revolutions, haul time, or test results are near specification limits or unsatisfactory.

GRADATION TECHNICIAN: An individual who has successfully completed the Department's Aggregate Gradation Testing Course and has demonstrated satisfactory field performance. The Gradation Technician shall be monitored on a daily basis by the Level II PCC Technician when performing tests. The Level II PCC Technician may have the Mixture Aggregate Technician, or Aggregate Technician responsible for supervising the Gradation Technician on a daily basis.

Duties:

1. Split aggregate samples provided by others.
2. Perform gradation test for coarse and fine aggregates.
3. Document test results.
4. Report test results to Level II PCC Technician. Immediate notification is required if test results are near specification limits or unsatisfactory.

MIXTURE AGGREGATE TECHNICIAN: An individual who has successfully completed the Department's 3-day Aggregate Training Course.

Duties:

1. Obtain and split aggregate samples.
2. Perform gradation test for coarse and fine aggregates.
3. Document test results.
4. Report test results to Level II PCC Technician. Immediate notification is required if test results are near specification limits or unsatisfactory.
5. Supervise the Gradation Technician, when required by the Level II PCC Technician.

NOTE: The duties listed are for assisting the Level II PCC Technician, and are not to be confused with the “Aggregate Gradation Control System” program.

AGGREGATE TECHNICIAN: An individual who has successfully completed the Department's 5-day Aggregate Training Course.

Duties:

1. Obtain and split aggregate samples.
2. Perform gradation test for coarse and fine aggregates.
3. Document test results.
4. Report test results to Level II PCC Technician. Immediate notification is required if test results are near specification limits or unsatisfactory.
5. Supervise the Gradation Technician, when required by the Level II PCC Technician.

NOTE: The duties listed are for assisting the Level II PCC Technician, and are not to be confused with the “Aggregate Gradation Control System” program.

Illinois Department of Transportation

Required Sampling and Testing Equipment for Concrete

Effective: December 1, 1993
Revised: January 1, 2014

This document applies to cast-in-place, precast, and precast prestressed operations. This document summarizes the minimum requirements for sampling and testing Portland Cement Concrete (PCC) mixtures, Cement Aggregate Mixture II (CAM II), and Controlled Low-Strength Material (CLSM). Refer to the *Manual of Test Procedures for Materials* for detailed equipment information.

AT THE PLANT OR LOCATION APPROVED BY THE ENGINEER:

Proportioning PCC, CAM II, CLSM

Aggregate Moisture Test Equipment, and Balance[1] or Scale[1]
([1] The weighing equipment does not have to be electronic. Check weights are recommended.)

Sampling Plastic PCC, CAM II, CLSM

Wheelbarrow or Similar Equipment

Shovel

Testing Plastic PCC, CAM II, CLSM

Slump Kit (PCC or CAM II)

Plastic Cylinder for Flow Test (CLSM)

Air Meter Kit and Calibration Equipment

Unit Weight Kit, Calibration Equipment, and Balance[1] or Scale[1]
([1] The weighing equipment does not have to be electronic. Check weights are recommended.)

Thermometer

Ruler

Hand Scoop or Trowel

Vibrator (if required)

Slump Flow Kit (Required only for self-consolidating concrete.)

J-Ring or L-Box Kit (Required only for self-consolidating concrete.)

Aggregate Sampling Equipment for High/Low Volume Operation

Template and brush, or sampling device, or shovel.

Aggregate Testing Equipment for High Volume Operation

Definition of High Volume Aggregate Testing Operation – The high volume aggregate testing equipment may be used for multiple concrete plants, if approved by the Engineer. The decision will be based on specification requirements for providing test results.

Electronic Balance[2]
([2] Check weights are recommended.)

Sieve Shaker, 305 mm (12 in.) sieve capacity and sufficient inside height to accept typical sieve stock

Sample Splitter, coarse aggregate, two pans[3]
([3] Three pans are required if the sample splitter does not have a hopper to hold aggregate.)

Sample Splitter, fine aggregate, two pans[3]
([3] Three pans are required if the sample splitter does not have a hopper to hold aggregate.)
(or)
Shovel, hand scoop, brush and dust pan,
Canvas blanket (optional), trowel (optional),
Sampling thief or small scoop or large spoon (optional)

Sieves, 305 mm (12 in.) brass with brass or stainless cloth

2 in. nominal height[4]— 25 mm (1 in.), 19 mm (3/4 in.),
16 mm (5/8 in.), 12.5 mm (1/2 in.)

1 5/8 in. nominal height[4]— 9.5 mm (3/8 in.), 6.25 mm (1/4 in.),
4.75 mm (No. 4), 1.18 mm (No. 16) two required,
0.3 mm (No. 50), 0.15 mm (No. 100),
0.075 mm (No. 200) two required

[4] Distance from the top of the frame to the sieve cloth surface

Two Pans

Lid

Electric Drying Oven 110 ± 5 °C (230 ± 9 °F)
(or)
Two Double Electric Hot Plates or Gas Burners

Sink, Faucet, and Water Supply

Four Drying Pans 330 x 230 x 50 mm (13 x 9 x 2 in.), typical

Four Holding Pans 305 mm (12 in.), minimum diameter

Accessories: Large spoon, soft bristle brass brush, paint brush or stencil brush, and putty knife or pointed dowel rod.

Aggregate Testing Equipment for Low Volume Operation

Definition of Low Volume Aggregate Testing Operation – The low volume aggregate testing equipment may be used only for a single concrete plant. If a reduced testing time is desired, the high volume aggregate testing equipment is recommended, since the low volume 200 mm (8 in.) sieves will normally require the coarse aggregate sample to be sieved in parts to prevent overloading.

Electronic Balance[2]
([2] Check weights are recommended.)

Sieve Shaker, 200 mm (8 in.) sieve capacity and sufficient inside height to accept typical sieve stock

Sample Splitter, coarse aggregate, two pans[3]
([3] Three pans are required if the sample splitter does not have a hopper to hold aggregate.)

Sample Splitter, fine aggregate, two pans[3]
([3] Three pans are required if the sample splitter does not have a hopper to hold aggregate.)
(or)
Shovel, hand scoop, brush and dust pan,
Canvas blanket (optional), trowel (optional),
Sampling thief or small scoop or large spoon (optional)

Sieves, 200 mm (8 in.) brass with brass or stainless cloth

2 in. nominal height[4]— 25 mm (1 in.), 19 mm (3/4 in.),
16 mm (5/8 in.), 12.5 mm (1/2 in.),
9.5 mm (3/8 in.), 6.25 mm (1/4 in.),
4.75 mm (No. 4)

1 in. nominal height[4]— 1.18 mm (No. 16) two required,
0.3 mm (No. 50) 0.15 mm (No. 100),
0.075 mm (No. 200) two required

[4] Distance from the top of the frame to the sieve cloth surface

Two Pans

Lid

Two Double Electric Hot Plates or Gas Burners

Sink, Faucet, and Water Supply

Two Drying Pans 330 x 230 x 50 mm (13 x 9 x 2 in.), typical

Three Holding Pans 305 mm (12 in.), minimum diameter

Accessories: Large spoon, soft bristle brass brush, paint brush or stencil brush, and putty knife or pointed dowel rod.

AT THE JOBSITE:

Sampling Plastic PCC, CAM II, CLSM

Wheelbarrow or Similar Equipment

Shovel

Testing Plastic PCC, CAM II, CLSM

Slump Kit (PCC or CAM II)

Plastic Cylinder for Flow Test (CLSM)

Air Meter Kit and Calibration Equipment

Thermometer

Ruler

Hand Scoop or Trowel

Vibrator (if required)

Slump Flow Kit (Required only for self-consolidating concrete.)

J-Ring or L-Box Kit (Required only for self-consolidating concrete.)

Making Strength Specimens (Cylinders or Beams)

Plastic Cylinder Molds, 150 x 300 mm (6 x 12 in.) or 100 x 200 mm (4 x 8 in.),

Plastic Cylinder Lids, 150 mm (6 in.), 100 mm (4 in.), or other material per Illinois Modified AASHTO T 23
----------OR----------
Steel or Plastic Beam Molds (typical length)
152 x 152 x 457 mm (6 x 6 x 18 in.),
152 x 152 x 483 mm (6 x 6 x 19 in.),
152 x 152 x 508 mm (6 x 6 x 20 in.),
152 x 152 x 533 mm (6 x 6 x 21 in.), or
152 x 152 x 762 mm (6 x 6 x 30 in.)

Plastic Cover with Absorbent Pad, or other material per Illinois Modified AASHTO T 23
----------AND----------
Tamping Rod or Vibrator (as appropriate)

Mallet

Hand Scoop (optional)

Trowel or Wood Float

AT THE JOBSITE OR LOCATION APPROVED BY THE ENGINEER:

Curing Strength Specimens

Moist Cabinet or Moist Room, with Air Temperature and
Relative Humidity Control Equipment

Recording Thermometer

Relative Humidity Measuring Device and Logbook, or
Relative Humidity Recording Device
----------OR----------
Water Storage Tank and Provisions for Water Temperature Control

Maximum/Minimum Thermometer and Logbook, or
Recording Thermometer

Testing Strength Specimens

Capping System for Compressive Strength

Mechanical Testing Machine for Compressive Strength
----------OR----------
Mechanical or Hand-Operated Testing Machine for
Flexural Strength (Using Simple Beam with Center-Point Loading)

Self-Consolidating Concrete

Saw to cut cylinders for hardened visual stability index.

PRECAST CONCRETE PLANTS (ADDITIONAL REQUIREMENTS):

For dry cast operations, the slump kit is optional and the air meter kit is not required.

Block/Brick Products – A compression test machine is required.

Pipe Products – A three-edge-bearing machine is required.

Applicable Products – When cores are used to determine compressive strength, the core drill shall have diamond impregnated bits attached to the core barrel.

Applicable Products – Absorption, permeability, hydrostatic, density, freeze/thaw, linear drying shrinkage, and abrasion resistance test equipment are required.

This Page Reserved

ILLINOIS DEPARTMENT OF TRANSPORTATION

METHOD FOR OBTAINING RANDOM SAMPLES FOR CONCRETE

Effective: December 1, 1993
Revised: January 1, 2014

- **Point of Random Sampling and Testing Based on Production**

Applicable Specification(s):

Special Provision for Quality Control/Quality Assurance of Concrete Mixtures

A random sample based on mixture production is to be determined according to the following procedure:

a) Determine the total quantity to be placed.

b) Divide the total quantity by the random sample testing frequency. Round up to the nearest whole number.

i.e. Total quantity of bridge substructure is 395 yd^3 (302 m^3). The random sample testing frequency is 50 yd^3 (40 m^3) for slump and air.

302/40 = 7.6
Obtain 8 random samples.

c) Obtain a random number from a calculator, a computer, or the Department's random numbers table and multiply this number by the random sample testing frequency. Round the result to the nearest whole number and document the random number used.

*0.576 × 50 yd^3 (40 m^3) = 29 yd^3 (23 m^3)

* Random number is from the Department's random numbers table.

d) Determine which truck is to be sampled by maintaining a cumulative total of the amount placed during the pour.

		Cumulative Total
1st truck	6.5 yd^3 (5.0 m^3)	6.5 yd^3 (5.0 m^3)
2nd truck	6.5 yd^3 (5.0 m^3)	13.0 yd^3 (10.0 m^3)
3rd truck	6.5 yd^3 (5.0 m^3)	19.5 yd^3 (15.0 m^3)
4th truck	6.5 yd^3 (5.0 m^3)	26.0 yd^3 (20.0 m^3)
**5th truck	6.5 yd^3 (5.0 m^3)	32.5 yd^3 (25.0 m^3)

** Sample this truck since the random sample calculation is at 29 yd^3 (23 m^3). It is not necessary to sample exactly at 29 yd^3 (23 m^3). Therefore, the slump and air test may be performed upon arrival of the truck. Sampling is to be performed according to Illinois Modified AASHTO R 60.

e) Continue the random sampling method for the next 50 yd^3 (40 m^3).

i.e. Second sample random number = 0.892

Sample to be obtained at:

0.892 × 50 yd^3 (40 m^3) = 45 yd^3 (36 m^3) in the second 50 yd^3 (40 m^3). Using the cumulative total you would sample at 95 yd^3 (76 m^3).

Third sample random number = 0.669

Sample to be obtained at:

0.669 × 50 yd^3 (40 m^3) = 33 yd^3 (27 m^3) in the third 50 yd^3 (40 m^3). Using the cumulative total you would sample at 133 yd^3 (107 m^3).

f) The last random sample shall be obtained by multiplying a random number by the fractional portion of the random sample testing frequency. Refer to the value of 7.6 which was determined under part b).

Obtain the last sample at:

0.609 × [0.6 × 50 yd^3 (40 m^3)] = 18 yd^3 (15 m^3) in the final 50 yd^3 (40 m^3). Using the cumulative total you would sample at 368 yd^3 (295 m^3).

- **<u>Point of Random Sampling and Testing Based on Location</u>**

Applicable Specification(s): (Note: Specifically for pull-off tests.)
Bridge Deck Microsilica Concrete Overlay
Bridge Deck Latex Concrete Overlay
Bridge Deck High-Reactivity Metakaolin (HRM) Concrete Overlay

A random sample based on a location within an area of pavement or bridge deck is to be determined according to the following procedure:

a) Obtain the length and width of the lot or sublot.

b) Obtain a random number from a calculator, a computer, or the Department's random numbers table, and multiply this number by the total length of the lot or sublot. Obtain another random number and multiply this number by the total width of the lot or sublot. For each result round to the nearest 0.1. Document the result and random number used.

For example, the lot or sublot is 500 ft (152 m) long and 12 ft (3.6 m) wide.

* 0.576 × 500 ft (152 m) = 288.0 ft (87.6 m)

* 0.892 × 12 ft (3.6 m) = 10.7 ft (3.2 m)

* Random number is from the Department's random numbers table.

Therefore, the random sample location shall be taken 288.0 ft (87.6 m) from the beginning of the lot or sublot, and 10.7 ft (3.2 m) from the designated right or left edge of the lot or sublot. The designated edge shall be determined by the Engineer, and shall not vary.

c) For each random sample location, determine the corresponding station location and document.

d) For each random sample location, the process shall be repeated for additional test locations using new random numbers for each location.

RANDOM NUMBERS

0.576	0.730	0.430	0.754	0.271	0.870	0.732	0.721	0.998	0.239
0.892	0.948	0.858	0.025	0.935	0.114	0.153	0.508	0.749	0.291
0.669	0.726	0.501	0.402	0.231	0.505	0.009	0.420	0.517	0.858
0.609	0.482	0.809	0.140	0.396	0.025	0.937	0.301	0.253	0.761
0.971	0.824	0.902	0.470	0.997	0.392	0.892	0.957	0.040	0.463
0.053	0.899	0.554	0.627	0.427	0.760	0.470	0.040	0.904	0.993
0.810	0.159	0.225	0.163	0.549	0.405	0.285	0.542	0.231	0.919
0.081	0.277	0.035	0.039	0.860	0.507	0.081	0.538	0.986	0.501
0.982	0.468	0.334	0.921	0.690	0.806	0.879	0.414	0.106	0.031
0.095	0.801	0.576	0.417	0.251	0.884	0.522	0.235	0.389	0.222
0.509	0.025	0.794	0.850	0.917	0.887	0.751	0.608	0.698	0.683
0.371	0.059	0.164	0.838	0.289	0.169	0.569	0.977	0.796	0.996
0.165	0.996	0.356	0.375	0.654	0.979	0.815	0.592	0.348	0.743
0.477	0.535	0.137	0.155	0.767	0.187	0.579	0.787	0.358	0.595
0.788	0.101	0.434	0.638	0.021	0.894	0.324	0.871	0.698	0.539
0.566	0.815	0.622	0.548	0.947	0.169	0.817	0.472	0.864	0.466
0.901	0.342	0.873	0.964	0.942	0.985	0.123	0.086	0.335	0.212
0.470	0.682	0.412	0.064	0.150	0.962	0.925	0.355	0.909	0.019
0.068	0.242	0.777	0.356	0.195	0.313	0.396	0.460	0.740	0.247
0.874	0.420	0.127	0.284	0.448	0.215	0.833	0.652	0.701	0.326
0.897	0.877	0.209	0.862	0.428	0.117	0.100	0.259	0.425	0.284
0.876	0.969	0.109	0.843	0.759	0.239	0.890	0.317	0.428	0.802
0.190	0.696	0.757	0.283	0.777	0.491	0.523	0.665	0.919	0.146
0.341	0.688	0.587	0.908	0.865	0.333	0.928	0.404	0.892	0.696
0.846	0.355	0.831	0.281	0.945	0.364	0.673	0.305	0.195	0.887
0.882	0.227	0.552	0.077	0.454	0.731	0.716	0.265	0.058	0.075
0.464	0.658	0.629	0.269	0.069	0.998	0.917	0.217	0.220	0.659
0.123	0.791	0.503	0.447	0.659	0.463	0.994	0.307	0.631	0.422
0.116	0.120	0.721	0.137	0.263	0.176	0.798	0.879	0.432	0.391
0.836	0.206	0.914	0.574	0.870	0.390	0.104	0.755	0.082	0.939
0.636	0.195	0.614	0.486	0.629	0.663	0.619	0.007	0.296	0.456
0.630	0.673	0.665	0.666	0.399	0.592	0.441	0.649	0.270	0.612
0.804	0.112	0.331	0.606	0.551	0.928	0.830	0.841	0.702	0.183
0.360	0.193	0.181	0.399	0.564	0.772	0.890	0.062	0.919	0.875
0.183	0.651	0.157	0.150	0.800	0.875	0.205	0.446	0.648	0.685

NOTE: Always select a new set of numbers in a systematic manner, either horizontally or vertically. Once used, the set should be crossed out.

This Page Reserved

IDOT Concrete Quality Control and Quality Assurance Documents

Effective Date: April 1, 2010
Revised Date: January 1, 2014

The following forms are located at http://www.idot.illinois.gov/doing-business/material-approvals/concrete/index.

Water/Cement Ratio Worksheet (BMPR PCCW01)
Field/Lab Gradations (MI504M)
Concrete Air, Slump and Quantity (BMPR MI654)
P.C. Concrete Strengths (BMPR MI655)
Calibration of Concrete Test Equipment, Slump (BMPR PCCQ01)
Calibration of Concrete Test Equipment, Air Meter, Type "A" (BMPR PCCQ02)
Calibration of Concrete Test Equipment, Air Meter, Type "B" (BMPR PCCQ03)
Calibration of Concrete Test Equipment, Air Meter, Volumetric (BMPR PCCQ04)
Calibration of Concrete Test Equipment, Unit Weight (BMPR PCCQ05)
Calibration of Concrete Test Equipment, Cylinder Molds, Plastic or Metal, 6" x 12" (BMPR PCCQ06)
Calibration of Concrete Test Equipment, Beam Molds, Steel (BMPR PCCQ07)
Calibration of Concrete Test Equipment, Metal Retainers & Neoprene Pads (BMPR PCCQ08)
Calibration of Concrete Test Equipment, Capping Cylindrical Strength Specimens (BMPR PCCQ09)
Calibration of Concrete Test Equipment, Cylinder Molds, Plastic, 4" x 8" (BMPR PCCQ10)

The following Manuals are located at http://www.lakeland.cc.il.us/as/idt/manuals.cfm.

Aggregate Technician Course or Mixture Aggregate Technician Course
Portland Cement Concrete Tester Course
Portland Cement Concrete Level I Technician Course - Manual of Instructions for Concrete Testing
Portland Cement Concrete Level II Technician Course - Manual of Instructions for Concrete Proportioning
Portland Cement Concrete Level III Technician Course - Manual of Instructions for Design of Concrete Mixtures

This Page Reserved

State of Illinois
Department of Transportation
Bureau of Materials and Physical Research

POLICY MEMORANDUM

Revised: January 1, 2008 6-08.0
This Policy Memorandum supersedes number 07-19 dated January 1, 2007

TO: REGIONAL ENGINEERS AND HIGHWAY BUREAU CHIEFS
AGGREGATE, HOT-MIX ASPHALT (HMA), AND
PORTLAND CEMENT CONCRETE (PCC) PRODUCERS

SUBJECT: MINIMUM PRIVATE LABORATORY REQUIREMENTS FOR
CONSTRUCTION MATERIALS TESTING OR MIX DESIGN

1.0 DEFINITIONS

AASHTO R 18 - The American Association of State Highway and Transportation Officials (AASHTO) Standard for "Establishing and Implementing a Quality System for Construction Materials Laboratories." The principles of AASHTO R 18 are used by the Bureau of Materials and Physical Research (BMPR) to administer the qualified laboratory program for **District** and **Private Laboratories**.

ACCREDITED LAB – A laboratory that is currently accredited by the AASHTO Accreditation Program (AAP) or other accrediting body recognized by FHWA.

BMPR LABORATORY - The Department's central laboratory maintained and operated by the Bureau of Materials and Physical Research (BMPR). The BMPR Laboratory administers the qualified laboratory program for **District** and **Private Laboratories**.

CONSULTANT - A Private firm which performs construction materials testing for the **Department**, **Producer**, or **Contractor**. **Department** prequalification and AASHTO accreditation requirements apply where **Department** construction testing is performed directly for the **Department** under a **Department** contract or subcontract.

CONTRACTOR - The individual, firm, partnership, joint venture, or corporation contracting with the **Department** for performance of prescribed work.

DEPARTMENT – Illinois Department of Transportation (IDOT), including its Districts and Central Bureau offices.

DISTRICT LABORATORY - A **Department** laboratory that is operated by a District.

FIELD TESTS – Tests that may be performed outside of a laboratory, for example, a portland cement concrete (PCC) or hot-mix asphalt (HMA) test performed at the jobsite.

HMA MIX DESIGN LABORATORY – Any **Private Laboratory** that has a **Department** approved HMA mix design lab. Consultants that are prequalified with

the **Department** for HMA Mix Design must be capable of performing the tests listed in Table 1 under HMA Design.

PRIVATE LABORATORY - Any construction materials testing or design laboratory not operated by the **Department**. This includes **Contractor**, **Producer**, or **Consultant** laboratories performing Quality Control (QC), Quality Assurance (QA), acceptance, independent assurance, or any other required or contracted testing on a **Department** project.

PRODUCER - An individual or business entity providing materials for performance of prescribed work.

QUALIFIED LABORATORIES – **Laboratories** that are inspected and approved by the **Department**. FHWA's Construction regulations (23 CFR 637.203) define these as *Laboratories that are capable as defined by appropriate programs established by each state transportation department. As a minimum, the qualification program shall include provisions for checking test equipment, and the laboratory shall keep records of calibration checks*.

QUALIFIED PERSONNEL - Personnel with demonstrated and documented capability to perform the applicable inspection and testing. The minimum requirement for aggregate, hot-mix asphalt (HMA), or Portland cement concrete (PCC) testing is successful completion of the prescribed **Department** Quality Control/Quality Assurance (QC/QA) Trained Technician classes. (Note: Additional personnel or experience requirements may apply to labs performing professional service work for the **Department**, e.g. Professional Engineer (P.E.) registrations, resumes, documented experience. When required, such notice will be provided in the prequalification process or solicitation notice.)

QUALITY ASSURANCE TESTING CONSULTANT – A Professional Engineering firm that is prequalified by the **Department** to perform field and/or laboratory tests for the **Department**. Required tests for quality assurance testing consultants are listed in Table 2.

QUALITY ASSURANCE LABORATORY - Any laboratory used for Quality Assurance (QA) testing (**Department** tests) required by the **Department**. Required tests for quality assurance laboratories are listed in Table 2.

QUALITY CONTROL LABORATORY - Any laboratory used for Quality Control (QC) testing (**Contractor** or **Producer** tests) required by the **Department**. Required tests for quality control laboratories are listed in Table 1.

QUALITY CONTROL (QC) MANAGER – An employee (or **Consultant**) of a **Contractor** or **Producer** who is responsible for compliance with the QC/QA requirements in a **Department** contract or policy.

TECHNICAL MANAGER - The individual with responsibility for the overall operations, condition, and maintenance of the **Private Laboratory**. The Technical Manager shall be identified in writing. The Technical Manager is not required to be the **QC Manager** defined in the contract. However, the Technical Manager shall be familiar with the Quality Control (QC) testing requirements and the specified equipment.

2.0 SCOPE

This policy governs the minimum qualifications for materials **Quality Control** and **Quality Assurance Laboratories** operated by **Contractors**, **Producers** and **Consultants**. It applies to aggregate, hot-mix asphalt (HMA) and Portland cement concrete (PCC) testing laboratories.

3.0 PURPOSE

- To ensure that **Private Laboratories** are equipped and maintained at a uniform and high level of quality.
- To establish a uniform procedure for evaluating and approving **Private Laboratories**.
- To maintain a uniform standard for inspecting test equipment and test procedures.

4.0 AUTHORITY

Federal regulations (23 CFR Part 637) require the **Department** to establish a program for "qualifying" construction laboratories involved in tests which are used for acceptance. Under the **Department's** QC/QA specifications, **Contractor**/**Producer** test results are used in the acceptance process

5.0 REFERENCE DOCUMENTS

- IDOT *Standard Specifications for Road and Bridge Construction.*
- IDOT *Manual of Test Procedures for Materials.*
- IDOT QC/QA Specifications for Hot-Mix Asphalt and Portland Cement Concrete.
- AASHTO, ASTM, and IDOT Test Procedures.
- Code of Federal Regulations (23 CFR Part 637).
- **Department** Policy MAT-15, “Quality Assurance Procedures for Construction.”

6.0 PRIVATE LABORATORY REQUIREMENTS

6.1 Personnel Qualifications/Responsibilities

6.1.1 All testing for **Department** contracts shall be performed by **Qualified Personnel** as specified in the contract.

6.1.2 The **Department** will maintain a computer database of **Qualified Personnel** who have successfully passed the appropriate QC/QA classes.

6.2 Facilities and Equipment

6.2.1 The **Department** shall approve all **Private Laboratories** used on **Department** projects.

6.2.2 Each **Private Laboratory** shall maintain the equipment and facilities necessary to perform the tests as appropriate for the product to be tested. A list of required **Private Laboratory** tests is provided in Tables 1and 2.

6.2.3 Each **Private Laboratory** shall have adequate floor space to efficiently conduct required tests. Suggested minimum floor space is provided under "Model Quality Control Plans" in the Manual of Test Procedures for Materials.

6.2.4 Each **Private Laboratory** shall have HVAC equipment capable of maintaining a room temperature of 20 to 30º C (68-86º F). A **Private Laboratory** that performs only aggregate gradation and/or aggregate moisture testing is exempt from this requirement.

6.2.5 All equipment shall be as specified in the current Manual of Test Procedures for Materials.

7.0 QUALITY SYSTEM CRITERIA

7.1 AASHTO R 18

Each **Private Laboratory** shall establish and implement a quality system which meets the criteria from **AASHTO R 18**. Accredited Laboratories shall comply with all of **AASHTO R 18** for AMRL, and ASTM C 1077 for CCRL.

7.2 Technical Manager

Each **Private Laboratory** shall have a **Technical Manager** (however titled) who has overall responsibility for the technical operations of the **Private Laboratory**. The **Technical Manager** shall be responsible for equipment maintenance and calibration, maintaining records, and ensuring that current test procedures are utilized. If the **Private Laboratory** is prequalified in a Professional **Consultant** service category, a licensed Illinois Professional Engineer shall have direct supervision of the laboratory.

7.3 Equipment Calibration and Verification

The **Private Laboratory** shall calibrate or verify all testing equipment associated with tests performed by the **Private Laboratory**. Table 3 includes a maximum interval for calibrating most laboratory equipment. Heavy use or specific test requirements may justify more frequent checks.

7.4 Proficiency Testing

Private Laboratory qualifications may include round-robin proficiency testing conducted by the **Department**. Results of proficiency testing may be considered in the overall evaluation of the **Private Laboratory** to conduct specific tests.

7.5 Records

7.5.1 Test Records – Each **Private Laboratory** shall maintain test records which contain sufficient information to permit verification of any test report.

7.5.2 Records Retention - Each **Private Laboratory** shall maintain documentation of the internal quality controls. At a minimum, the records shall include:

- Documentation of assignment of personnel responsible for internal quality controls.
- Documentation of equipment calibration.
- Logs of sample pick-up shall be maintained for a minimum period of three years.
- All documentation shall be maintained and available to **Department** inspection for a period of three years.

7.5.3 Equipment Calibration and Verification Records - Calibration records shall include the minimum information listed below. **AASHTO R 18** and ASTM Standard C 1077 provide additional guidance for calibration of most testing equipment.

1. Description
2. Model & Serial Number
3. Name of person calibrating
4. Calibration equipment used
   (e.g., standard weights, proving rings, thermometers)
5. Date calibrated & next due date
6. Reference procedure used
7. Results of calibration / verification

7.5.4 Proficiency Sample Records – Each **Private Laboratory** shall retain results of participation in any proficiency sample program, including the documentation of steps taken to determine the cause of poor results and corrective action taken.

7.6 Publications

Each **Approved Private Laboratory** shall maintain current copies of all test procedures performed. This requirement shall include a current copy of the Manual of Test Procedures for Materials.

8.0 LABORATORY INSPECTIONS

8.1 General

The **Department** will approve **Private Laboratories** by inspection.

- AGGREGATE LABORATORIES - Initial inspections and re-inspections will be performed by the District.
- OTHER LABORATORIES - Initial inspections are performed by the **Bureau of Materials and Physical Research**. Re-inspections are performed by the District.

8.2 AASHTO Accredited Private Laboratories

8.2.1 Current AASHTO accreditation of the **private** laboratory is a prerequisite for **Consultant** prequalification as a **Quality Assurance Testing Consultant.** Conditions for prequalification may be found in the prequalification instructions and forms.

AASHTO accreditation does not waive the right of the **Department** to conduct inspections and/or re-inspections.

8.3 Initial Inspection

- Facilities - Physical and environmental conditions.
- Equipment - Test apparatus for specification compliance.
- Documentation - Calibration and verification records.
- Personnel - A review of qualified personnel credentials.
- Observation - The **Private Laboratory** may be required to demonstrate **Required Tests**. Some test procedures, such as field tests, may be evaluated through discussion with laboratory personnel.
- Report - The **Private Laboratory** will be provided with a report listing those tests for which it is approved. The report will note deficiencies.

8.4 Initial HMA and PCC Laboratory Inspections

8.4.1 The **Private Laboratory** shall submit a written request for an inspection to the District. The request shall indicate the following:

- The location of the **Private Laboratory**.
- The type of **Private Laboratory**, i.e., aggregate, HMA, or PCC.
- The name of the **Technical Manager**, who will be present for the inspection.
- The date the **Private Laboratory** will be ready for inspection.

8.4.2 The District will notify the **BMPR Laboratory** of the inspection request. **BMPR** personnel will establish a tentative date to perform the inspection.

8.4.3 The District will perform a brief visual inspection approximately seven calendar days before the **BMPR** inspection. The District will verify that the **Private Laboratory** is ready for inspection and notify the **BMPR Laboratory**.

8.4.4 **BMPR** personnel will perform the inspection and prepare a preliminary report. Standard inspection forms and a preliminary report, developed and maintained by the **BMPR Laboratory**, will be used.

8.4.5 **BMPR** personnel will assign identification numbers to all test equipment. Unless a District has an established numbering system, the following sequences will be used.

Sieves
e.g., IL07 -1418-01
where: IL = State
07 = inspection year
1418-01 = Producer/Supplier Number
Sieves are engraved on the inside of the bottom lip directly beneath the label.

HMA Equipment
e.g., IL07B1 - 123
where: IL = State
07 = inspection year
B = hot mix asphalt (bituminous)
1 = district number
123 = sequential numbers

PCC Equipment
e.g., IL07C1 - 123
where: IL = State
07 = inspection year
C = concrete
1 = district number
123 = sequential numbers

*The numbering system prior to 2007 was IL07-123 for HMA and IL07CND1-123 for PCC. The change was made to make the numbering system more uniform.

8.4.6 **BMPR** personnel will perform a close-out with the **Technical Manager** and the District representative. The **Technical Manager** and the District will be given a copy of the preliminary report.

8.4.7 If a review of the preliminary report indicates there are no deficiencies, **BMPR** will provide written notification to the **Private Laboratory** indicating the **Private Laboratory** is now an approved private laboratory. The notification will include an equipment list. A copy of the notification will be provided to the District.

8.4.8 If the preliminary report indicates there are deficiencies, **BMPR** will provide written notification to the **Private Laboratory**, indicating the deficiencies and that corrective action is required. A copy of the written notification will be provided to the District.

8.4.9 After correction of all cited deficiencies, the **Private Laboratory** shall notify the District. The District will inspect the **Private Laboratory** to verify the deficiencies have been corrected and will notify **BMPR** in writing.

8.4.10 **BMPR** will provide written notification to the **Private Laboratory**, indicating the private laboratory is now an approved private laboratory. The notification will include an equipment list. A copy of the written notification will be provided to the District.

8.4.11 Uncorrected deficiencies will not be waived. Equivalent equipment specifications may be approved only with the written approval of BMPR's Engineer of Tests.

8.5 Initial Aggregate Laboratory Inspection

For an aggregate **Private Laboratory**, the procedures outlined in 8.4 shall be followed, except District personnel will perform the inspection instead of personnel from **BMPR**.

8.6 **Re-Approval of Approved Private Laboratories**

8.6.1 The re-inspection of **Private Laboratories** shall be conducted at intervals deemed appropriate by the District. The interval between inspections shall not exceed two calendar years. The District's evaluation may include the following:

- Physical inspection of the laboratory facility and equipment.
- Review of the **Private Laboratory's** internal quality plan and documentation in accordance with this policy and those parts of **AASHTO R 18** incorporated by this policy.
- Observations of tests performed by qualified personnel.
- Results of split sample testing between the **Private Laboratory** and the District.
- Results of proficiency sample testing programs conducted by the **Department**.
- Overall past performance and experience.

8.6.2 The District may not waive any requirements for **Private Laboratories** or test equipment for **Required Tests**.

8.6.3

The District shall issue a letter of re-approval to the **Private Laboratory**, or provide a written and itemized deficiency list. The **Private Laboratory** shall notify the District when deficiencies are corrected and ready for re-inspection.

8.6.4 At any time, if the District identifies deficiencies in the facility, equipment, or test procedures that could affect the results of any QC or QA tests, the District will require the **Private Laboratory** to take immediate action to correct the deficiency.

9.0 EXEMPTIONS – AMRL

If a **Private Laboratory** maintains current accreditation from AMRL for the appropriate test procedures, the District may waive the re-inspection requirements of this policy. To enact the waiver, the **Private Laboratory** must provide copies of inspection reports and proficiency sample results to the District. This waiver does not apply to the initial inspection requirements, including the required equipment list.

10.0 LABORATORY DATABASE

The **Department** will maintain a computer database to monitor the approval status of **Private Laboratories**. The database will include the following information:

- Laboratory Codes (Department, Producer, etc.)
- Responsible District
- Type Laboratory (Aggregate, HMA, PCC, Other)
- Demographics (Address, etc.)
- Date Inspected
- Approval Status

David L. Lippert, P.E.
Engineer of Materials
and Physical Research

Attachments

DAD/rm

TABLE 1 (CON'T)

PRIVATE LABORATORY TESTS

	PROCEDURE		PRIVATE LAB TYPE				
	AASHTO (Illinois Modified)	ASTM	AGG	HMA QC	HMA DESIGN	PCC QC	DESCRIPTION
AGGREGATE TESTS	T 2 (IL)		√	√	√	√	Sampling of Aggregates
	T 11 (IL)		√	√	√	√	Materials Finer Than 75-µm (No. 200) Sieve in Mineral Aggregates by Washing
	T 19 (IL)		√[1]			√	Unit Weight and Voids in Aggregate
	T 27 (IL)		√	√	√	√	Sieve Analysis of Fine and Coarse Aggregates
	T 84 (IL)		√[2]				Specific Gravity and Absorption of Fine Aggregate
	T 85 (IL)		√[2]				Specific Gravity and Absorption of Coarse Aggregate
	T 248 (IL)		√	√	√	√	Reducing Field Samples of Aggregate to Testing Size
	T 255 (IL)		√	√	√	√	Total Moisture Content of Aggregate by Drying

Note 1: Required for laboratories that test Air Cooled Blast Furnace Slag.

Note 2: Required for laboratories that run the Department's Slag Producers' Self-Testing Program.

TABLE 1 (CON'T)

PRIVATE LABORATORY TESTS

HOT-MIX ASPHALT TESTS

PROCEDURE		PRIVATE LAB TYPE				
AASHTO (Illinois Modified)	ASTM	AGG	HMA QC	HMA DESIGN	PCC QC	DESCRIPTION
T 30 (IL)				√		Mechanical Analysis of Extracted Aggregate
T 164 (IL)			√[1] Or T287 or T308[2]	√[1]		Quantitative Extraction of Bitumen from Bituminous Paving Mixtures
T 166 (IL)			√	√		Bulk Specific Gravity of Compacted Bituminous Mixtures Using Saturated Surface-Dry Specimens
T 209 (IL)			√	√		Maximum Specific Gravity of Bituminous Paving Mixtures
T 245 (IL)						Resistance to Plastic Flow of Bituminous Mixtures Using Marshall Apparatus
T 283 (IL)				√		Resistance of Compacted Bituminous Mixture to Moisture Induced Damage
T 287 (IL)			√ Or T164 or T 308[2]			Asphalt Content of Bituminous Concrete Mixtures by the Nuclear Method
T 312 (IL)			√	√		Superpave Gyratory Compaction
T 308 (IL)			√ or T164 or T 287[2]	√		Asphalt Binder Content of Hot-Mix Asphalt by the Ignition Method
_____	D 2950 (IL)		√			Determination of Density of Bituminous Concrete In-Place by Nuclear Method – Field Test; not observed during Lab Inspection

Note 1: Required for laboratories that test Air Cooled Blast Furnace Slag.

Note 2: Required for laboratories that run the Department's Slag Producers' Self-Testing Program.

TABLE 1 (CON'T)

PRIVATE LABORATORY TESTS

	PROCEDURE		PRIVATE LAB TYPE				
	AASHTO (Illinois Modified)	ASTM	AGG	HMA QC	HMA DESIGN	PCC QC	DESCRIPTION
PORTLAND CEMENT CONCRETE TESTS	T 22 (IL)					√[1] Either T22 or T177.	Compressive Strength of Cylindrical Concrete Specimens
	T 23 (IL)					√	Making and Curing Concrete Test Specimens in the Field
	T 119 (IL)					√	Slump of Portland Cement Concrete
	T 121 (IL)					√	Weight per Cubic Foot, Yield, and Air Content
	T 126 (IL)					Required If developing mix designs.	Making and Curing Concrete Test Specimens in the Laboratory
	T 141 (IL)					√	Sampling Fresh Concrete
	T 152 (IL)					√	Air Content of Freshly Mixed Concrete by the Pressure Method - Type A or B Air Meter
	T 177 (IL)					√[1] Either T22 or T177.	Flexural Strength of Concrete - Hand Pump or Mechanical Breaker
	T 196 (IL)						Air Content of Freshly Mixed Concrete by the Volumetric Method
	T 231						Capping Cylindrical Concrete Specimens
	T 309 (IL)					√	Temperature of Freshly Mixed PCC
	IL Test Procedure 301	——					Fine Aggregate Moisture Content by Flask Method
	IL Test Procedure 302	——					Fine or Coarse Aggregate Specific Gravity and Moisture Content by Dunagan Method
	IL Test Procedure 303	——					Fine or Coarse Aggregate Moisture Content by Pycnometer Jar Method
	IL Test Procedure 306					Required If developing mix designs.	Voids Test of Coarse Aggregate for Concrete Mixtures

Note 1:For an exception to the strength testing requirement of performing compressive or flexural testing (example: labs at Concrete Producer Plants), refer to the Department's "Required Sampling and Testing Equipment for Concrete" document and check with district for approval of exception.

TABLE 2
REQUIRED TESTS – QUALITY ASSURANCE TESTING CONSULTANTS[1]

	PROCEDURE		REQUIRED FOR PREQUALIFICATION			DESCRIPTION
	AASHTO (Illinois Mod)	ASTM	IDOT QA	AAP On-Site Assessment	AAP Proficiency Assessment	
AGGREGATE	T 2 (IL)		√			Sampling of Aggregates
	T 11 (IL)		√	√	√	75-µm (No. 200) by Washing
	T 19 (IL)		√	√		Unit Weight and Voids in Aggregate
	T 27 (IL)		√	√	√	Sieve Analysis of Fine and Coarse Aggregates
	T 84 (IL)[2]		√	√	√	SG and Absorption of Fine Aggregate
	T 85 (IL)[2]		√	√	√	SG and Absorption of Coarse Aggregate
	T 248 (IL)		√	√		Reducing Field Samples Size
	T 255 (IL)		√	√		Total Moisture Content
HOT-MIX ASPHALT	T 30 (IL)		√			Mechanical Analysis of Extracted Aggregate
	T 164 (IL)		√	√		Quantitative Extraction
	T 166 (IL)		√	√	√	Bulk Specific Gravity
	T 209 (IL)		√	√	√	Maximum Specific Gravity
	T 245 (IL)					Marshall Stability & Flow
	T 283 (IL)		√	√		Resistance to Moisture Induced Damage
	T 287 (IL)		√[3]			Asphalt Content by the Nuclear Method
	T 312(IL)		√	√	√	Superpave Gyratory Compaction
	T 308(IL)		√	√	√	Asphalt Binder Content by Ignition
		D 2950 (IL)	√			Nuclear Density– Field Test

Note 1: QA labs have the option to be HMA/AGG, PCC/AGG, or HMA/PCC/AGG approved

Note 2: Required for laboratories that run the Department's Slag Producers' Self-Testing Program.

Note 3: Requirement determined on case to case basis by district in which lab is located.

TABLE 2 (CON'T)
REQUIRED TESTS – QUALITY ASSURANCE TESTING CONSULTANTS[1]

	PROCEDURE		REQUIRED FOR PREQUALIFICATION			
	AASHTO (Illinois Mod)	ASTM	IDOT QA	AAP On-Site Assessment	AAP Proficiency Assessment	DESCRIPTION
CONCRETE	R39 (IL)				√	Making and Curing Test Specimens in the Laboratory
	T 22 (IL)		√	√	√	Compressive Strength of Cylinders
	T 23 (IL)		√	√	√	Making and Curing Test Specimens in the Field
	T 119 (IL)		√	√	√	Slump
	T 121 (IL)		√	√	√	Weight, Yield, and Air Content
	T 141 (IL)		√	√		**Sampling Fresh Concrete**
	T 152 (IL)		√	√	√	**Air Content-Type A or B Pressure Method**
	T 177 (IL)		√	√[2]		**Flexural Strength of Concrete - Hand Pump or Mechanical Breaker**
	T 196 (IL)		[3]	[3]	[5]	**Air Content by Volumetric Method**
	T 231 (IL)		[3]	[3]		**Capping Cylinders**
	T309 (IL)		√	√		**Temperature of Freshly Mixed PCC**
	IL Test 301		[3]			**FA Moisture by Flask Method**
	IL Test 302		[3]			**FA or CA Aggregate SG and Moisture - Dunagan**
	IL Test 303		[3]			**FA or CA Moisture Content by Pycnometer Jar Method**
	IL Test 306		[4]			**Voids Test of CA for Concrete Mixtures**

Note 1: QA labs have the option to be HMA/AGG, PCC/AGG, or HMA/PCC/AGG approved.

Note 2: The AAP on-site assessment is not required for Illinois type portable beam breakers but is required for all other types of beam breakers. Additional Information regarding use of portable PCC labs and their approval is provided In Department Policy MAT-15, "Quality Assurance Procedures for Construction".

Note 3 Test equipment must be presented during an inspection if the consultant lab has the ability to perform the test.

Note 4 Test equipment must be presented during an inspection if consultant lab has the ability to verify PCC mix designs.

Note 5 Test must be performed if consultant lab has the ability to perform the test.

TABLE 3[1]
EQUIPMENT CALIBRATION SCHEDULE

EQUIPMENT	REQUIREMENT	MAXIMUM INTERVAL (MONTHS)
Aggregate & General		
Unit Weight Measures	Standardize	12
General Purpose Balances, Scales, Weights	Standardize	12
Mechanical Shakers	Check Sieve Thoroughness	12
Ovens	Standardize Thermometric Device	12
Sieves	Check Physical Condition	6
Thermometers	Calibrate	6
PCC		
Air Meters (Pressure Type)	Standardize During Use	3 (Type B)
	Standardize	12 (Type A)
Air Meters (Volumetric Type)	Standardize	12
Compression & Flexural Testing Machine	Standardize	12
Capping Material	Check Strength	3 or New Shipment
Slump Cones	Check Critical Dimensions	12
Reusable Molds	Check Critical Dimensions	12
Single Use Molds	Check Dimensions	Each Shipment
Moist Room/Storage Tanks Recording Thermometer or Max/Min Thermometer	Standardize	6 Months
HMA		
Gyratory Compactor	Calib. Angle, Pressure, Ht.	1 During use
Base Plates, Ram Face, Molds	Check Critical Dimensions	12
Marshall Hammer	Check Physical Condition	12
	Standardize	36
Ignition Furnace	Standardize	Each mix
Vacuum Pump	Check Pressure	12
Tensile Strength Machine	Standardize	12
Timers	Check Accuracy	6
Molds, Breaking Heads	Check Critical Dimensions	12
Pycnometers	Check Critical Dimensions & Physical Condition	12
Mixers, Bituminous	Check Physical Condition	12
Water Baths	Standardize	8
Extraction Equipment	Check Physical Condition	12

Note 1: See AASHTO R18 for equipment calibration terminology definitions

This Page Reserved

Aggregate Laboratory Equipment
Appendix D3

Effective: October 1, 1995
Revised: June 1, 2012

All equipment listed is required unless noted otherwise. This list recommends 12" sieves and 12" shakers. Individual needs may vary for the specific products. Eight-inch sieves and other alternate equipment may be substituted provided they conform to Illinois Test Procedure or ASTM requirements and are approved by the Engineer.

Quantity	Description
1	Mechanical Sieve Shaker – 12" sieve capacity
1	Coarse Aggregate Sample Splitter (Illinois Test Procedure 248, Method A)
4	Splitter Pans, for coarse aggregate
1	Fine Aggregate Sample Splitter (as required)
4	Splitter Pans, for fine aggregate
1	Sink and clear Water Supply
1	Oven, electric drying, capable of maintaining a uniform temperature of 110 ± 5 °C (230 ± 9 °F), (optional – see Hot Plate)
2	Hot Plate, electric, or burner, gas – in lieu of Oven, if approved by the Engineer
1	Gloves, pair, insulated
1	Balance, electronic, 8000 g capacity, 0.1 g readability
15	Sample Pans, (constructed to minimize loss of material during testing)
2	Spoon, stainless steel, 15 in. minimum
1	Brush, stencil
1	Brush, brass
1	Knife, putty
2	Thermometers, -18 – 150 °C (0 – 300 °F), readable to 0.5 °C (1.0 °F), to verify Oven temperature
1	Set (11) Fine Aggregate Sieves, brass, 8 in. or 12 in. diameter, with brass or stainless cloth, 9.5 mm, 4.75 mm, 2.36 mm, 2.00 mm, 1.18 mm, 600 mm, 425 mm, 300 mm, 180 mm, 150 mm, 75 mm (3/8 in., No. 4, No. 8, No. 10, No. 16, No. 30, No. 40, No. 50, No. 80, No. 100, No. 200), according to ASTM E 11
1	Lid for 12 in. sieve
1	Pan, catch, bottom, 12 in.
1	Set (11) Coarse Aggregate Sieves, brass, 12 in. diameter, with brass or stainless cloth, 37.5 mm, 25 mm, 19 mm, 16 mm, 12.5 mm, 9.5 mm, 6.3 mm, 4.75 mm, 2.36 mm, 1.18 mm, 75 mm (1 1/2 in., 1 in., 3/4 in., 5/8 in., 1/2 in., 3/8 in., No. 4, No. 8, No. 16, No. 200), according to ASTM E 11
1	Additional 12 in. brass sieves are required for testing larger coarse aggregate (e.g., a 1 3/4 in. sieve is required for CA 5 testing)
1	Wash Sieve, 12 in. diameter, No. 200, recommended 3 1/4 in. nominal height*
1	Wash Sieve, 12 in. diameter, No. 16, recommended 3 1/4 in. nominal height*

* Distance from the top of the frame to the sieve cloth surface

Aggregate Laboratory Equipment
Appendix D3
(continued)
Effective: October 1, 1995
Revised: June 1, 2012

VENDOR LIST – For Information Only

Baxter Healthcare Corporation
One Baxter Parkway
Deerfield, IL 60015-4625
Phone: 800-422-9837

Curtin Matheson Scientific, Inc. (CMS)
1225 North Michael Drive
Wood Dale, Illinois 60191
Phone: 800-323-6572

Gilson Company, Inc.
P.O. Box 200
Lewis Center, OH 43035-200
Phone: 800-444-1508

Greco Sales, Inc.
901 East Adams Street
Springfield, Illinois 62708
Phone: 800-252-8522
217-528-2548

Humboldt Scientific, Inc.
3801 North 25th Avenue
Schiller Park, IL 60176
Phone: 800-544-7220

Rainhart Company
P.O. Box 4533
Austin, Texas 78765
Phone: 800-628-0021

VWR Scientific
3850 North Wilke Road
Suite 300
Arlington Heights, IL 60004
Phone: 847-463-1233

Hot-Mix Asphalt QC/QA Laboratory Equipment
Appendix D4

Effective: April 1, 1997
Revised: April 1, 2010

This document summarizes the minimum requirements for Hot-Mix Asphalt (HMA) quality control, quality assurance, and design laboratories. It is the contractor's responsibility to ensure that all equipment complies with the applicable test specification in the *Manual of Test Procedures for Materials*.

The QC laboratory will be 600 ft^2 (55 m^2) or greater in size and be located at the mix production site. The laboratory will have running water and controlled heating and air conditioning capable of maintaining a temperature between 68 – 86 °F (20 - 30 °C). The laboratory will be properly maintained and contain the necessary equipment and supplies for performing the Quality Control testing. All testing will be performed at the QC laboratory.

A. Quality Control Equipment

1. Balance (1): As defined by Illinois Specification 101. Balances used for Illinois Modified AASHTO T 166 and Illinois Modified AASHTO T 85 shall also include the following:

    a. Suspension apparatus for weighing in water.

    b. Wire or monofilament line, of smallest practical diameter, between scale and water.

2. Constant Temperature Water Bath (1): As defined by Illinois Modified AASHTO T 166 and Illinois Modified AASHTO T 209 with the following additional requirements:

    a. Commercial grade, built specifically for laboratory use.

    b. Capable of maintaining 77 ± 1.8 °F (25 ± 1 °C).

    c. Sufficient depth to immerse the pycnometer pot and capillary lid.

    d. Having perforated false bottom or equipped with a shelf at least 2 in. (50 mm) above bottom of bath.

3. Freezer (1):

    a. Capable of storing twenty-five 4 in. (100 mm) cores.

    b. If freezer is not available, a saw capable of producing an undamaged specimen is required.

4. Metal Pot Pycnometer (2): (May require machining to a height which permits complete immersion in the bath.)

    a. Capable of containing a minimum sample weight of 1200 g, which will be completely submerged.

    b. Vacuum gauge or manometer capable of measuring 28.7 in. (730mm) Hg or greater vacuum gauge pressure.

    c. Capillary lid.

    d. Small piece of fine wire mesh over the vacuum hose opening.

5. Ovens:

    a. Aggregates (1): Capable of maintaining 230 ± 9 °F (110 ± 5 °C). (May be omitted if approved by the Engineer; in this event, hot plates shall be provided for drying.)

    b. Hot-mix asphalt (1): Capable of maintaining 375 ± 5 °F (191 ± 3 °C).

    Note: In situations where large oven capacity is required, the Department recommends the use of two smaller ovens instead of one large oven. This is due to the problem of maintaining the required temperatures when the doors are frequently opened.

6. Personal Computer with Appropriate Software and Printer
(Contact Tom Schutzbach of the Bureau of Materials and Physical Research.)

    Note: A minimum 8 MB memory is required for Windows version.

7. Sample Splitters:

    a. Aggregate (1 each): As defined by Illinois Modified AASHTO T 248.

    b. Hot-mix asphalt (1): As defined by Illinois Modified AASHTO T 248 with the following additional requirements:

        i. Length of discharge (catch) pan equals or exceeds total chute width.

        ii. Each chute separated by a vertical metal divider.

8. Sieve Shaker (Mary Ann type or equivalent) (1): Capable of holding 12 in. (305 mm) sieves.

9. Twelve-inch Sieves (2 sets), 2 in. in height*:

   a.

1-1/2 in. (37.5mm)	3/8 in. (9.5mm)	No. 30 (600 µm)
1 in. (25mm)	1/4 in. (6.3mm)	No. 50 (300 µm)
3/4 in. (19mm)	No. 4 (4.75mm)	No. 100 (150 µm)
5/8 in. (16 mm)	No. 8 (2.36mm)	No. 200 (75 µm)
1/2 in. (12.5mm)	No. 16 (1.18mm)	bottom pan and lid

   b. Sieves No. 4 (4.75mm) and larger will be checked with "go/no-go" gauges for compliance with minimum and maximum size openings.

   c. Sieves below the 3/8 in. (9.5mm) may be 1 5/8 in. nominal height*.

   d. Extra No. 16 and No. 200 required as wash sieves.

   * Distance from the top of the frame to the sieve cloth surface

10. Thermometers:

   a. Any Thermometric Device (1): As defined by Illinois Modified AASHTO T 209, with a suitable range to determine 77 ± 1.8 °F (25 ± 1 °C).

   b. Metal-stemmed (3): As defined by Illinois Modified AASHTO T 312 with a suitable range to determine 50 – 450 °F (10 – 232 °C).

11. Timer (1): Minimum 20-minute capability.

12. Vacuum Pump (1): Capable of removing entrapped air to a partial vacuum gauge pressure of 28.7 in. (730 mm) Hg or greater.

13. Gyratory Compactor (1) meeting the requirements of Illinois Modified AASHTO T 312.

14. Gyratory Mold-Loading Chute (1):

   a. Capable of holding a minimum of 130 in.^{3} (2120 cm^3).

   b. Minimum length of 22 in. (560 mm).

   c. Capable of loading entire gyratory sample in one motion without spillage or segregation.

15. Gyratory Specimen Molds (2): As defined by Illinois Modified AASHTO T 312.

16. Printer (1): As defined by Illinois Modified AASHTO T 312.

17. Specimen Extruder (1):

    a. Does not allow free-fall of specimen.

    b. Diameter of extruding disk must not be less than 5.4 in. (138mm).

18. Ignition Oven (1): Gilson Binder Ignition Furnace, Model HM-378; Barnstead/Thermolyne Furnace, Models F 85930 or F 85938; CEM Max Furnace; Carbolite Furnace, Model ABA 7/35; or Troxler Furnace, Models 4730 or 4731 as defined by Illinois AASHTO T 308.

    Note: Other available furnace types may be used if acceptably evaluated by an IDOT-approved research laboratory.

19. Pan with approximate dimensions of 24 in. x 24 in x 6 in (L x W x H) for cleaning samples out of baskets after ignition burn.

20. Sampling Shovel with sides and back built up 1 – 1 1/2 in. (25 – 40 mm).

21. Nuclear Asphalt Density Gauge (1): As defined by Illinois Modified ASTM D 2950.

22, Nuclear Asphalt Content Gauge (1) and Related Apparatus: As defined by the Department's "Procedure for Asphalt Content of HMA Mixtures by the Nuclear Method."*

    ***Note:** Only required if lab utilizes Illinois Modified AASHTO T 287 (in place of Illinois Modified AASHTO T 308) to determine asphalt content of HMA mixtures.

B. Additional Equipment Required for Mix Design and QA Testing Consultants

1. Balance (1): As defined by Illinois Specification 101.

2. Extraction Apparatus, if utilizing RAP (1): As defined by Illinois Modified AASHTO T 164, Test Method B.

3. Loading Device (1): As defined by Illinois Modified AASHTO T 283.

4. Load-Measuring Device (1):

    a. Sensitivity 10 lbs (4.5 kg).

    b. Accuracy within 1%.

5. Loading Strips (one set for 6 in. specimens): As defined by Illinois Modified AASHTO T 283.

6. Oven for short term aging (1): Capable of maintaining 325 ± 5 °F (163 ± 3 °C).

7. Water Bath (1): As defined by Illinois Modified AASHTO T 283 with the following additional requirements:

    a. Depth at least 6 in. (150 mm).

    b. Having perforated false bottom or equipped with a shelf at least 2 in. (51 mm) above bottom of bath.

    c. Thermostatically controlled.

    d. Capable of maintaining 140 ± 1.8 °F (60 ± 1 °C).

8. Thermometer for Water Bath (140 °F [60 °C]) (1):

    a. Minimum range of 131 – 149 °F (55 – 65 °C).

    b. Graduated in increments less than or equal to 0.4 °F (0.2 °C).

9. Baking Pans (2): Each providing a minimum surface area of 140 in.^{2} (903 cm^2).

*10. Mixing Apparatus (1): As defined by Illinois Modified AASHTO T 245 with a minimum capacity of 12000 g.

*Optional

This Page Reserved

Illinois Specification 101
Minimum Requirements for Electronic Balances
Appendix D5

Effective Date: April 1, 1999
Revised February 1, 2014

Electronic balances for materials testing laboratories shall be top-loading, direct-reading, with specified minimum capacity and readability per the table below. Underhooks are required for hot mix asphalt laboratories.

Purchasers are advised to specify balances that are manufactured according to AASHTO M 231. Laboratories may, at their option, provide additional balances that comply with each individual test procedure.

Electronic balances approved for Illinois Department of Transportation use prior to the effective date of this specification may be utilized until replaced.

Minimum Requirements for Laboratory Balances

QC/QA LAB TYPE	MINIMUM CAPACITY	READABILITY
AGGREGATE (AGCS, HMA, PCC)		
Moisture, Gradation, Specific Gravity		
Fine Aggregate	8 kg	0.1 g
Coarse Aggregate CA/CM 6 through 19	8 kg	0.1 g
Coarse Aggregate CA/CM 1 through 5	12 kg	0.1 g
HOT MIX ASPHALT		
Volumetric Analysis		
Mix Design Labs (Marshall and Superpave)	15 kg	0.1 g
QC, QA Labs (Marshall and Superpave)	8 kg	0.1 g
Asphalt Content		
(Nuclear AC Gauge or Ignition Furnace)	12 kg	0.1 g
PORTLAND CEMENT CONCRETE[1]		
Aggregate Moisture Content**	8 kg	0.1 g
Unit Weight**	[2]	‡
Cylinder Strength Specimens***	†	50 g maximum

* A maximum 50-gram (0.1 lb.) readability is permitted to calibrate the unit weight measure (Illinois Modified AASHTO T 121) and the air meter measuring bowl (Illinois Modified AASHTO T 152). However, if the capacity of the unit weight measure and the air meter measuring bowl is less than 0.009 cubic meter (0.3 cu.ft.), a 20-gram (0.05 lb.) or smaller readability is preferable for calibration.

[1]* The weighing equipment may be a balance or scale, and it does not have to be electronic.

***The weighing of cylinder strength specimens prior to compressive strength testing is optional.

[2] Sufficient capacity.

‡ A 20-gram (0.05 lb.) or smaller readability shall be required for unit weight measures which have a capacity less than 0.009 cubic meter (0.3 cu.ft.). A 50-gram (0.1 lb.) or smaller readability shall be required for unit weight measures which have a capacity greater than or equal to 0.009 cubic meter (0.3 cu.ft.).

This Page Reserved

AASHTO M 92

Wire-Cloth Sieves for Testing Purposes

AASHTO M 92 test method, Wire-Cloth Sieves for Testing Purposes, cannot be reproduced in this manual due to copyright. AASHTO standards may be requested from the address below:

AASHTO
444 North Capitol Street, N. W.
Suite 249
Washington, D.C. 20001
(202) 624-5800
www.transportation.org

This Page Reserved

Illinois Modified Test Procedure
Effective Date: June 1, 2012

Standard Method of Test
for
Moist Cabinets, Moist Rooms, and Water Storage Tanks
Used in the Testing of Hydraulic Cements and Concretes

Reference AASHTO M 201-11

AASHTO Section	***Illinois Modification***
6.1	Replace the fourth sentence as follows: All moist cabinets and moist rooms shall be equipped with either a relative humidity measuring device and logbook or relative humidity recording device.
7.1	Replace the second and third sentences as follows: Provisions shall be provided for water temperature control. Either a maximum/minimum thermometer and logbook or recording thermometer shall be required to monitor temperature. A maximum/minimum thermometer shall be checked for accuracy according to the same requirements as a recording thermometer.

This Page Reserved

Illinois Modified Test Procedure
Effective Date: June 1, 2012

Standard Method of Test
for
Molds for Forming Concrete Test Cylinders Vertically

Reference AASHTO M 205M/M 205-11

AASHTO Section	***Illinois Modification***
2.1	Revise as follows: AASHTO T 23 (Illinois Modified) AASHTO R 39 (Illinois Modified) To maintain brevity in the text, the following will apply: **Example:** AASHTO T 23 (Illinois Modified) will be designated as “AASHTO T 23.”

This Page Reserved

AASHTO R 18

Establishing and Implementing a Quality Management System for Construction Materials Testing Laboratories

AASHTO R 18 test method, Establishing and Implementing a Quality Management System for Construction Materials Testing Laboratories, cannot be reproduced in this manual due to copyright. AASHTO standards may be requested from the address below:

AASHTO
444 North Capitol Street, N. W.
Suite 249
Washington, D.C. 20001
(202) 624-5800
www.transportation.org

This Page Reserved

PFP Quality Level Analysis
Appendix E1

Effective: December 12, 2003
Revised: January 1, 2013

This stand-alone document explains the statistical analysis and procedure used to determine the pay factor for a hot-mix asphalt (HMA) mixture on Pay for Performance (PFP) project. HMA materials specified to be sampled and tested for percent within limits payment adjustment (voids, VMA, and in-place density) and dust/AC adjustments will be evaluated for acceptance in accordance with this document.

Pay parameters evaluated using percent within (PWL) limits will be analyzed collectively and statistically by the Quality Level Analysis method using the procedures listed to determine the total estimated percent of the lot that is within specification limits. Quality Level Analysis is a statistical procedure for estimating the percent compliance to a specification and is affected by shifts in the arithmetic mean and the sample standard deviation. Two measures of quality are required to establish the contract unit price adjustment. The first measure is the Acceptable Quality Level (AQL) which is the PWL at which the lot will receive 100 percent pay. The second measure of quality is the Rejectable Quality Level (RQL) at which the Department has determined the material may not perform as desired and may be rejected.

The pay factor on full-depth projects shall be determined by weighting each mixture equally. Material placed at the same gyrations values but with and without polymer will be evaluated as two separate mixtures. For example: one surface mix and one binder mix will be weighted 50/50 regardless of tonnage. Additionally, one surface mix, one polymer binder mix and one non-polymer mix will be evaluated as three equally (1/3) weighted mixtures even if the polymer binder is the only difference between binder lifts.

Pay adjustments for Dust/AC ratio will be applied using the Dust/AC Pay Adjustment Table found in the Hot Mix Asphalt Pay for Performance Using Percent within Limits special provision.

QUALITY LEVEL ANALYSIS

Note: Table 1: Pay Attributes and Price Adjustment Factors contain the UL, LL, and pay factor "f" weights.

Items 1 through 8 of the following procedure will be repeated for each lot of the various pay factor parameters.

(1) Determine the arithmetic mean ($\bar{x}$) of the test results:

$$\bar{x} = \frac{\sum x}{n}$$

Where:
$\sum$ = summation of
x = individual test value
n = total number of test values

(2) Calculate the sample standard deviation (s):

$$s = \sqrt{\frac{n \cdot \Sigma (x)^2 - (\Sigma x)^2}{n(n-1)}}$$

Where:

$\sum (x^2)$ = summation of the squares of individual test values

$(\sum x)^2$ = summation of the individual test values squared

(3) Calculate the upper quality index (Q_U):

$$Q_U = \frac{UL - \bar{x}}{s}$$

Where:

UL = upper specification limit (target value (*TV*) plus allowable deviation)

(4) Calculate the lower quality index (Q_L):

$$Q_L = \frac{\bar{x} - LL}{s}$$

Where:

LL = lower specification limit(target value (*TV*) minus allowable deviation)

(5) Determine P_U (percent within the upper specification limit which corresponds to a given Q_U) from Table 2. (Note: Round up to nearest Q_U in table 2.)

Note: If a *UL* is not specified, P_U will be 100.

(6) Determine P_L (percent within the lower specification limit which corresponds to a give Q_L) from Table 2. (Note: Round up to nearest Q_L in table 2.)

Note: If a *LL* is not specified, P_L will be 100.

(7) Determine the Quality Level or *PWL* (the total percent within specification limits).

$PWL = (P_U + P_L) - 100$

(8) To determine the pay factor for each individual parameter lot:

Pay Factor (PF) = 53 + 0.5 (PWL)

(9) Once the project is complete determine the Total Pay Factor (*TPF*) for each parameter by using a weighted lot average by tons (mix) or distance (density) of all lots for a given parameter.

TPF = W1PFlot1 + W2PFlot(n+1) + etc.

Where:

W1,W2… = weighted percentage of material evaluated
PF = Pay factor for the various lots
TPF = Total pay factor for the given parameter

(10) Determine the Composite Pay Factor (*CPF*) for each mixture. The *CPF* shall be rounded to 3 decimal places.

$$CPF = \left[f_{VMA}\left(TPF_{VMA}\right) + f_{voids}\left(TPF_{voids}\right) + f_{density}\left(TPF_{density}\right)\right] / 100$$

Substituting from Table 1:

$$CPF = \left[0.3\left(TPF_{VMA}\right) + 0.3\left(TPF_{voids}\right) + 0.4\left(TPF_{density}\right)\right] / 100$$

Where:

f_{VMA}, f_{voids}, *and* $f_{density}$ = Price Adjustment Factor listed in Table 1

TPF_{VMA}, TPF_{voids}, *and* $TPF_{density}$ = *Total Pay Factor for the designated measured attribute from (9)*

(11) Determine the final pay for a given mixture.

*Final Pay = Mixture Unit Price * Quantity * CPF*

PFP Quality Level Analysis
Appendix E1
(continued)

Effective: December 12, 2003
Revised: January 1, 2013

Table 1: Pay Attributes and Price Adjustment Factors			
Measured Attribute	Factor *"f"*	*UL*	*LL*
VMA	0.3	MDR[1] + 3.0	MDR[1] – 0.7
Plant Voids	0.3	Design Voids + 1.35	Design Voids – 1.35
In-Place Density	0.4	97.0[2]	91.5[2]
IL 4.75	0.4	97.0	92.5
IL 9.5 FG Level Binder[3]	0.4	97.0	90.5
IL 19.0 & 25.0	0.4	97.0	92.2
SMA	0.4	98.0	93.0

1. MDR = Minimum Design Requirement
2. Applies to all HMA mixes other than IL-4.75, IL-19.0, IL-25.0, SMA and IL 9.5 FG Level Binder placed ≤ 1.25 in. (32 mm) thick
3. Placed at a thickness ≤ 1.25 in. (32 mm)

PFP Quality Level Analysis
Appendix E1
(continued)

Effective: December 12, 2003
Revised: January 1, 2013

Example:

Determine the Pay factor for the given lot of a N90 HMA surface being placed at 1.5 inches thick as an overlay. The project consists of 10,000 tons over 17 miles.

Note that mix sample and density lots are independent of each other.

In this example the mix sample lot represents 10,000 tons while the density lot represents 6 miles (N=30). The project would have two additional density lots following the same calculations as the first lot. All three lots are combined as per item (9).

Mix sample: Each sublot represents 1000 tons

Lot #	Sublot #	Voids TV = 4.0	VMA Design Min = 14.5
1	1	4.2	14.4
	2	4.5	14.7
	3	3.3	13.9
	4	5.0	15.0
	5	5.4	15.2
	6	2.5	13.5
	7	3.8	14.2
	8	4.1	14.3
	9	4.3	14.4
	10	4.5	14.6
	Average:	4.16	14.42
	Standard Deviation:	0.825	0.498

Density: Each density test interval represents 0.2 mile thus N=30 in which 5 cores are taken per mile would represent 6 miles of paving.

Lot #	Density Test Interval	Density
1	1	91.5
	2	93.0
	3	92.9
	4	93.5
	5	93.0
	6	94.0
	7	92.8
	8	93.5
	9	91.0
	⋮	⋮
	30	92.7
	Average:	92.79
	Standard Deviation:	0.910

Determine the pay factor for each parameter.

Voids:

Lot: Average = 4.16
Standard Deviation = 0.825

$$Q_U = \frac{(4.0 + 1.35) - 4.16}{0.825} = 1.44$$

$$Q_L = \frac{4.16 - (4.0 - 1.35)}{0.825} = 1.83$$

N = 10 sublots (from table)

P_U = 94

P_L = 98

PWL = (94 + 98) - 100

PWL = 92

PF = 53 + 0.5 (92)

PF = 99.0

Determine the pay factor for Voids.

PF_{Voids} = 99.0

VMA:

Lot : Average = 14.42
Standard Deviation = 0.498

$$Q_U = \frac{(14.5 + 3.0) - 14.42}{0.498} = 6.18$$

$$Q_L = \frac{14.42 - (14.5 - 0.7)}{0.498} = 1.24$$

N = 10 sublots (from table)

P_U = 100

P_L = 90

PWL = (100 + 90) - 100

PWL = 90

PF = 53 + 0.5 (90)

PF = 98

Determine the pay factor for VMA.

PF_{VMA} = 98.0

Density:

Lot: Average = 92.79
Standard Deviation = 0.910

$$Q_U = \frac{97.0 - 92.79}{0.910} = 4.63$$

$$Q_L = \frac{92.79 - 91.5}{0.910} = 1.42$$

N = 30 Density measurements (from table)

P_U = 100

P_L = 93

PWL = (100 + 93) - 100

PWL = 93

PF = 53 + 0.5 (93)

PF = 99.5

Determine the pay factor for Density.

$PF_{Density}$ = 99.5

Determine the total pay factors for each parameter. In this example 10,000 tons of mix represents the entire project so only one lot exists for VMA and voids. If more mix lots occurred on a project they would be combined just like density as shown.

Lot #	Mix Tons	Void PF	VMA PF	Density Distance	Density PF
1	10,000	99.0	98.0	31680 ft	99.5
2				31680 ft	101.4
3				24640 ft	97.3
TPF		**99.0**	**98.0**	88000 ft	**99.6**

$$TPF_{Density} = W1PF_{lot1} + W2PF_{lot2} + W3PF_{lot3}$$

$$TPF_{Density} = (31680/88000)(99.5)+(31680/88000)(101.4)+(24640/88000)(97.3)$$

$$TPF_{Density} = 99.6$$

Combine the three Total Pay Factors to determine the Composite Pay Factor for the mix.

$$CPF = [0.3(99.0) + 0.3(98.0) + 0.4(99.6)] / 100$$

$$CPF = 0.989$$

Determine the price paid for the given mixture.

Given that the mixture bid price per ton = $65.00 and 10,000 tons were placed.

Plan Unit Pay = $65.00/ton * 10,000 tons = $650,000

Adjusted Pay = $65.00/ ton * 10,000 tons * 0.989 = $642,850

Determine the difference between the adjusted pay and the plan unit pay.

Adjusted pay – Plan Unit Pay = $642,850 – $650,000 = - $7,150

If the difference is a positive value this will be the incentive paid. If the difference is a negative value this will be the disincentive paid. In this case a $7,150 disincentive would be paid as per policy memorandum 9-4.

Full Depth Examples:

Given a full-depth project with two mixtures whose combined pay factors were determined to be 101.5% and 99.2%. The full-depth pay factor shall be calculated as follows:

101.5(1/2) + 99.2(1/2) = 100.4%

Determine the adjusted pay for the full-depth pay factor.

Given that the bid price per square yard = \$25.00 and 1400 yd^2 were placed.

Plan Unit Pay = \$25.00/ yd^2 * 1400 yd^2 = \$35,000

Adjusted Pay = \$25.00/ yd^2 * 1400 yd^2 * 1.004 = \$35,140

Difference = \$35,140 – \$35,000 = \$140 (Positive value = Incentive)

Given a full-depth project with three mixtures whose pay factors were determined to be 98.9%, 101.5% and 99.2%. The full depth pay factor shall be calculated as follows:

98.9(1/3) + 101.5(1/3) + 99.2(1/3) = 99.9%

Determine the adjusted pay for the full-depth pay factor.

Given that the bid price per square yard = \$25.00 and 1400 yd^2 were placed.

Plan Unit Pay = \$25.00/ yd^2 * 1400 yd^2 = \$35,000

Adjusted Pay = \$25.00/ yd^2 * 1400 yd^2 * 0.999 = \$34,965

Difference = \$34,965 – \$35,000 = -\$35 (Negative = Disincentive)

PFP Quality Level Analysis
Appendix E1
(continued)

Effective: December 12, 2003
Revised: January 1, 2013

TABLE 2: QUALITY LEVELS
QUALITY LEVEL ANALYSIS BY STANDARD DEVIATION METHOD

P_U OR P_L PERCENT WITHIN LIMITS FOR POSITIVE VALUES OF Q_U OR Q_L	UPPER QUALITY INDEX Q_U OR LOWER QUALITY INDEX Q_L														
	n=3	n=4	n=5	n=6	n=7	n=8	n=9	n=10 to n=11	n=12 to n=14	n=15 to n=18	n=19 to n=25	n=26 to n=37	n=38 to n=69	n=70 to n=200	n=201 to infinity
100	1.16	1.50	1.79	2.03	2.23	2.39	2.53	2.65	2.83	3.03	3.20	3.38	3.54	3.70	3.83
99		1.47	1.67	1.80	1.89	1.95	2.00	2.04	2.09	2.14	2.18	2.22	2.26	2.29	2.31
98	1.15	1.44	1.60	1.70	1.76	1.81	1.84	1.86	1.91	1.93	1.96	1.99	2.01	2.03	2.05
97		1.41	1.54	1.62	1.67	1.70	1.72	1.74	1.77	1.79	1.81	1.83	1.85	1.86	1.87
96	1.14	1.38	1.49	1.55	1.59	1.61	1.63	1.65	1.67	1.68	1.70	1.71	1.73	1.74	1.75
95		1.35	1.44	1.49	1.52	1.54	1.55	1.56	1.58	1.59	1.61	1.62	1.63	1.63	1.64
94	1.13	1.32	1.39	1.43	1.46	1.47	1.48	1.49	1.50	1.51	1.52	1.53	1.54	1.55	1.55
93		1.29	1.35	1.38	1.40	1.41	1.42	1.43	1.44	1.44	1.45	1.46	1.46	1.47	1.47
92	1.12	1.26	1.31	1.33	1.35	1.36	1.36	1.37	1.37	1.38	1.39	1.39	1.40	1.40	1.40
91	1.11	1.23	1.27	1.29	1.30	1.30	1.31	1.31	1.32	1.32	1.33	1.33	1.33	1.34	1.34
90	1.10	1.20	1.23	1.24	1.25	1.25	1.26	1.26	1.26	1.27	1.27	1.27	1.28	1.28	1.28
89	1.09	1.17	1.19	1.20	1.20	1.21	1.21	1.21	1.21	1.22	1.22	1.22	1.22	1.22	1.23
88	1.07	1.14	1.15	1.16	1.16	1.16	1.16	1.17	1.17	1.17	1.17	1.17	1.17	1.17	1.17
87	1.06	1.11	1.12	1.12	1.12	1.12	1.12	1.12	1.12	1.12	1.12	1.12	1.12	1.13	1.13
86	1.04	1.08	1.08	1.08	1.08	1.08	1.08	1.08	1.08	1.08	1.08	1.08	1.08	1.08	1.08
85	1.03	1.05	1.05	1.04	1.04	1.04	1.04	1.04	1.04	1.04	1.04	1.04	1.04	1.04	1.04
84	1.01	1.02	1.01	1.01	1.00	1.00	1.00	1.00	1.00	1.00	1.00	1.00	0.99	0.99	0.99
83	1.00	0.99	0.98	0.97	0.97	0.96	0.96	0.96	0.96	0.96	0.96	0.96	0.95	0.95	0.95
82	0.97	0.96	0.95	0.94	0.93	0.93	0.93	0.92	0.92	0.92	0.92	0.92	0.92	0.92	0.92
81	0.96	0.93	0.91	0.90	0.90	0.89	0.89	0.89	0.89	0.88	0.88	0.88	0.88	0.88	0.88
80	0.93	0.90	0.88	0.87	0.86	0.86	0.86	0.85	0.85	0.85	0.85	0.84	0.84	0.84	0.84
79	0.91	0.87	0.85	0.84	0.83	0.82	0.82	0.82	0.82	0.81	0.81	0.81	0.81	0.81	0.81
78	0.89	0.84	0.82	0.80	0.80	0.79	0.79	0.79	0.78	0.78	0.78	0.78	0.77	0.77	0.77
77	0.87	0.81	0.78	0.77	0.76	0.76	0.76	0.75	0.75	0.75	0.75	0.74	0.74	0.74	0.74
76	0.84	0.78	0.75	0.74	0.73	0.73	0.72	0.72	0.72	0.71	0.71	0.71	0.71	0.71	0.71
75	0.82	0.75	0.72	0.71	0.70	0.70	0.69	0.69	0.69	0.68	0.68	0.68	0.68	0.68	0.67
74	0.79	0.72	0.69	0.68	0.67	0.66	0.66	0.66	0.66	0.65	0.65	0.65	0.65	0.64	0.64
73	0.76	0.69	0.66	0.65	0.64	0.63	0.63	0.63	0.62	0.62	0.62	0.62	0.62	0.61	0.61
72	0.74	0.66	0.63	0.62	0.61	0.60	0.60	0.60	0.59	0.59	0.59	0.59	0.59	0.58	0.58

PFP Quality Level Analysis
Appendix E1
(continued)

Effective: December 12, 2003
Revised: January 1, 2013

TABLE 2: QUALITY LEVELS
QUALITY LEVEL ANALYSIS BY STANDARD DEVIATION METHOD

P_U OR P_L PERCENT WITHIN LIMITS FOR POSITIVE VALUES OF Q_U OR Q_L	UPPER QUALITY INDEX Q_U OR LOWER QUALITY INDEX Q_L														
	n=3	n=4	n=5	n=6	n=7	n=8	n=9	n=10 to n=11	n=12 to n=14	n=15 to n=18	n=19 to n=25	n=26 to n=37	n=38 to n=69	n=70 to n=200	n=201 to infinity
71	0.71	0.63	0.60	0.59	0.58	0.57	0.57	0.57	0.57	0.56	0.56	0.56	0.56	0.55	0.55
70	0.68	0.60	0.57	0.56	0.55	0.55	0.54	0.54	0.54	0.53	0.53	0.53	0.53	0.53	0.53
69	0.65	0.57	0.54	0.53	0.52	0.52	0.51	0.51	0.51	0.50	0.50	0.50	0.50	0.50	0.50
68	0.62	0.54	0.51	0.50	0.49	0.49	0.48	0.48	0.48	0.48	0.47	0.47	0.47	0.47	0.47
67	0.59	0.51	0.47	0.47	0.46	0.46	0.46	0.45	0.45	0.45	0.45	0.44	0.44	0.44	0.44
66	0.56	0.48	0.45	0.44	0.44	0.43	0.43	0.43	0.42	0.42	0.42	0.42	0.41	0.41	0.41
65	0.52	0.45	0.43	0.41	0.41	0.40	0.40	0.40	0.40	0.39	0.39	0.39	0.39	0.39	0.39
64	0.49	0.42	0.40	0.39	0.38	0.38	0.37	0.37	0.37	0.37	0.36	0.36	0.36	0.36	0.36
63	0.46	0.39	0.37	0.36	0.35	0.35	0.35	0.34	0.34	0.34	0.34	0.34	0.33	0.33	0.33
62	0.43	0.36	0.34	0.33	0.32	0.32	0.32	0.32	0.31	0.31	0.31	0.31	0.31	0.31	0.31
61	0.39	0.33	0.31	0.30	0.30	0.29	0.29	0.29	0.29	0.29	0.28	0.28	0.28	0.28	0.28
60	0.36	0.30	0.28	0.27	0.27	0.27	0.26	0.26	0.26	0.26	0.26	0.26	0.26	0.25	0.25
59	0.32	0.27	0.25	0.25	0.24	0.24	0.24	0.24	0.23	0.23	0.23	0.23	0.23	0.23	0.23
58	0.29	0.24	0.23	0.22	0.21	0.21	0.21	0.21	0.21	0.21	0.20	0.20	0.20	0.20	0.20
57	0.25	0.21	0.20	0.19	0.19	0.19	0.18	0.18	0.18	0.18	0.18	0.18	0.18	0.18	0.18
56	0.22	0.18	0.17	0.16	0.16	0.16	0.16	0.16	0.16	0.15	0.15	0.15	0.15	0.15	0.15
55	0.18	0.15	0.14	0.14	0.13	0.13	0.13	0.13	0.13	0.13	0.13	0.13	0.13	0.13	0.13
54	0.14	0.12	0.11	0.11	0.11	0.11	0.10	0.10	0.10	0.10	0.10	0.10	0.10	0.10	0.10
53	0.11	0.09	0.08	0.08	0.08	0.08	0.08	0.08	0.08	0.08	0.08	0.08	0.08	0.08	0.08
52	0.07	0.06	0.06	0.05	0.05	0.05	0.05	0.05	0.05	0.05	0.05	0.05	0.05	0.05	0.05
51	0.04	0.03	0.03	0.03	0.03	0.03	0.03	0.03	0.03	0.03	0.03	0.03	0.03	0.03	0.03
50	0.00	0.00	0.00	0.00	0.00	0.00	0.00	0.00	0.00	0.00	0.00	0.00	0.00	0.00	0.00

Note: For negative values of Q_U or Q_L, P_U or P_L is equal to 100 minus the table P_U or P_L. If the value of Q_U or Q_L does not correspond exactly to a figure in the table, use the next higher value.

PFP Hot-Mix Asphalt Random Plant Samples
Appendix E2

Effective Date: May 1, 2008

Samples shall be obtained at the frequency specified in the Hot Mix Asphalt Pay for Performance Using Percent within Limits special provision.

A. The random plant samples shall be taken at the randomly selected tonnage within a sublot. The random tonnage will be determined by the Engineer using the "Random Numbers" table as specified herein or an approved software program. The tonnage shall be calculated according to the following:

1. Unless otherwise known, determine the random locations for a tonnage in excess of five percent over plan quantity by multiplying the plan quantity tonnage by 1.05 to determine an over-projected final quantity. If the over-projected final quantity is not achieved, disregard the additional random values.

2. Determine the maximum number of sublots needed for the given mixture by dividing the over-projected tonnage calculated above by the sublot size in tons (metric tons). This will determine the maximum number of sublots for the given mixture.

3. Multiply the sublot tonnage by a three-digit random number, expressed as a decimal. The number obtained (rounded to a whole number) shall be the random sampling tonnage within the given sublot.

4. The individual sublot random tonnages shall then be converted to the cumulative random tonnages. This is accomplished by using the following equation for each sublot.

$$CT_n = [(ST) * (n - 1)] + RT_n$$

Where: n = the sublot number
CT = Cumulative tonnage
RT = Random tonnage as determined in #3 above
ST = Sublot tonnage (typically 1000 tons)

B. If the paving is completed for a particular mixture before the specified sampling tonnage for the last sublot is achieved, the partial sublot shall be omitted.

C. Plant truck samples shall be taken of the mixture for testing. Two sampling platforms (one on each side of the truck) shall be provided for sampling of the mix. In order to obtain a representative sample of the entire truck, an equal amount of material shall be taken from each quarter point around the circumference of each pile in the truck to obtain a composite sample weighing approximately 200lbs. (95 kg). All truck samples shall be obtained by using a "D"-handled, square-ended shovel with built-up sides and back (1 to 1-1/2 in. [25 to 38 mm]). The sample shall be taken out of the truck containing the random tonnage as determined by the Engineer following the procedure described herein. The sample

tonnage will be disclosed no more than 30 minutes prior to sampling. Sampling shall be performed by the Contractor under the supervision of the Engineer.

D. The truck sample shall be divided into three approximately equal size (split) samples by the use of an approved mechanical sample splitter. The Engineer will witness all splitting. Two split samples for Department testing shall be placed in Department-approved sample containers provided by the Contractor and identified as per the Engineer's direction. The Engineer will gain immediate possession of both Department split samples. The Contractor may store, discard, or test the remaining split as described in Section 1030 of the Standard Specifications. However, the Contractor must test and provide the sample results in order to initiate the dispute resolution process as described in the Hot Mix Asphalt Pay for Performance Special Provision.

Example:

Given: - Plan quantity = 10,000 tons for a given mixture. - Sublot = 1000 tons (725 metric tons).

1. Determine the over-projected final tonnage.

10,000 tons * 1.05 = 10,500 tons (Note: Always round up)

2. Determine the maximum number of sublots needed for the project based on the over-projected tonnage.

10,500 tons/1000 tons = 10.5 (Note: Always round up)
Therefore, 11 maximum sublots

3. Obtain random numbers from the table and apply a different random number to each sublot.

1000 * 0.546 = 546
1000 * 0.123 = 123

Repeat for **each** sublot.

4. Convert **individual** tonnage to cumulative job tonnage.

[1000*(1-1)] + 546 = 546
[1000*(2-1)] + 123 = 1123

Repeat for each sublot.

PFP Hot-Mix Asphalt Random Plant Samples
Appendix E2
(continued)
Effective Date: May 1, 2008

The following contains a completed table for the eleven plant random samples:

Lot Number	Sublot Number	Random Number	Tonnage within Sublot	Cumulative Job Tonnage
1	1	0.546	1000 * 0.546 = 546	[1000 * (1-1)] + 546 = 546
	2	0.123	1000 * 0.123 = 123	[1000 * (2-1)] + 123 = 1123
	3	0.789	1000 * 0.789 = 789	[1000 * (3-1)] + 789 = 2789
	4	0.372	1000 * 0.372 = 372	[1000 * (4-1)] + 372 = 3372
	5	0.865	1000 * 0.865 = 865	[1000 * (5-1)] + 865 = 4865
	6	0.921	1000 * 0.921 = 921	[1000 * (6-1)] + 921 = 5921
	7	0.037	1000 * 0.037 = 37	[1000 * (7-1)] + 37 = 6037
	8	0.405	1000 * 0.405 = 405	[1000 * (8-1)] + 405 = 7405
	9	0.214	1000 * 0.214 = 214	[1000 * (9-1)] + 214 = 8214
	10	0.698	1000 * 0.698 = 698	[1000 * (10-1)] + 698 = 9698
	11	0.711	1000 * 0.711 = 711	[1000 * (11-1)] + 711 = 10711

This Page Reserved

PFP Hot-Mix Asphalt Random Plant Samples
Appendix E2
(continued)
Effective Date: May 1, 2008

PFP Hot-Mix Asphalt Random Plant Samples (continued)

RANDOM NUMBERS

0.576	0.730	0.430	0.754	0.271	0.870	0.732	0.721	0.998	0.239
0.892	0.948	0.858	0.025	0.935	0.114	0.153	0.508	0.749	0.291
0.669	0.726	0.501	0.402	0.231	0.505	0.009	0.420	0.517	0.858
0.609	0.482	0.809	0.140	0.396	0.025	0.937	0.301	0.253	0.761
0.971	0.824	0.902	0.470	0.997	0.392	0.892	0.957	0.040	0.463
0.053	0.899	0.554	0.627	0.427	0.760	0.470	0.040	0.904	0.993
0.810	0.159	0.225	0.163	0.549	0.405	0.285	0.542	0.231	0.919
0.081	0.277	0.035	0.039	0.860	0.507	0.081	0.538	0.986	0.501
0.982	0.468	0.334	0.921	0.690	0.806	0.879	0.414	0.106	0.031
0.095	0.801	0.576	0.417	0.251	0.884	0.522	0.235	0.389	0.222
0.509	0.025	0.794	0.850	0.917	0.887	0.751	0.608	0.698	0.683
0.371	0.059	0.164	0.838	0.289	0.169	0.569	0.977	0.796	0.996
0.165	0.996	0.356	0.375	0.654	0.979	0.815	0.592	0.348	0.743
0.477	0.535	0.137	0.155	0.767	0.187	0.579	0.787	0.358	0.595
0.788	0.101	0.434	0.638	0.021	0.894	0.324	0.871	0.698	0.539
0.566	0.815	0.622	0.548	0.947	0.169	0.817	0.472	0.864	0.466
0.901	0.342	0.873	0.964	0.942	0.985	0.123	0.086	0.335	0.212
0.470	0.682	0.412	0.064	0.150	0.962	0.925	0.355	0.909	0.019
0.068	0.242	0.777	0.356	0.195	0.313	0.396	0.460	0.740	0.247
0.874	0.420	0.127	0.284	0.448	0.215	0.833	0.652	0.701	0.326
0.897	0.877	0.209	0.862	0.428	0.117	0.100	0.259	0.425	0.284
0.876	0.969	0.109	0.843	0.759	0.239	0.890	0.317	0.428	0.802
0.190	0.696	0.757	0.283	0.777	0.491	0.523	0.665	0.919	0.146
0.341	0.688	0.587	0.908	0.865	0.333	0.928	0.404	0.892	0.696
0.846	0.355	0.831	0.281	0.945	0.364	0.673	0.305	0.195	0.887
0.882	0.227	0.552	0.077	0.454	0.731	0.716	0.265	0.058	0.075
0.464	0.658	0.629	0.269	0.069	0.998	0.917	0.217	0.220	0.659
0.123	0.791	0.503	0.447	0.659	0.463	0.994	0.307	0.631	0.422
0.116	0.120	0.721	0.137	0.263	0.176	0.798	0.879	0.432	0.391
0.836	0.206	0.914	0.574	0.870	0.390	0.104	0.755	0.082	0.939
0.636	0.195	0.614	0.486	0.629	0.663	0.619	0.007	0.296	0.456
0.630	0.673	0.665	0.666	0.399	0.592	0.441	0.649	0.270	0.612
0.804	0.112	0.331	0.606	0.551	0.928	0.830	0.841	0.702	0.183
0.360	0.193	0.181	0.399	0.564	0.772	0.890	0.062	0.919	0.875
0.183	0.651	0.157	0.150	0.800	0.875	0.205	0.446	0.648	0.685

Note: Always select a new set of numbers in a systematic manner, either horizontally or vertically. Once used, the set should be crossed out.

This Page Reserved

PFP and QCP Random Density Procedure
Appendix E3

Effective: April 1, 2009
Revised: January 1, 2013

Density tests using cores shall be obtained at the frequency specified in the Hot Mix Asphalt Quality Control for Performance (QCP) and Pay for Performance (PFP) Using Percent within Limits special provisions. The random test locations shall be determined as follows:

A) The random core locations shall be taken at the randomly selected test location within each density testing interval. The random test location will be determined by the Engineer using the "Random Numbers" table as specified herein or an approved software program. This may be performed each day or predetermined for the project. Regardless of when the values are determined, the values are to be considered confidential and are not to be disclosed to anyone outside of the Department. Disclosing the information prior to finish rolling would be in direct violation of federal regulations.

Each core location shall be randomly located both longitudinally and transversely within each density testing interval. Each core location within the density testing interval shall be determined with two random numbers. The first random number is used to determine the longitudinal distance to the nearest 1 ft into the density testing interval. The second random number is used to determine the transverse offset to the nearest 0.1 ft from the left edge of the paving lane.

To determine the longitudinal location of a core, multiply the length of the prescribed density interval by the random number selected from the Random Number table. Determine the random transverse offset as follows:

1. PFP. The effective lane width of the pavement shall be used in calculating the transverse offset. The effective lane width is determined by subtracting 1.0 ft for each unconfined edge from the entire paved lane width (i.e. If a 12.0 ft wide paved lane has two unconfined edges, the effective lane width would be 10.0 ft.) Determine the transverse offset by multiplying the effective width by the random number selected from the Random Number table.

   The transverse offset is measured from the left physical edge of the paved lane to locate the core on the pavement. If the left edge was unconfined, it will be omitted by adding 1.0 ft to the calculated transverse offset measurement.

   Random locations that fall within 4.0 inches of a confined edge shall be moved to 4.0 inches off the edge. Areas outside the mainline pavement that are paved concurrently with the mainline pavement (i.e. three-ft wide left shoulders, driveways, etc.) are not considered part of the paved mainline mat. See PFP example calculation herein.

   The core density location for the outer 1.0 ft of an unconfined edge will be randomly selected within each 0.5 mile section for each unconfined edge. Longitudinal joint testing shall be located at a distance equal to the lift thickness or a minimum of 4.0 in. (100 mm), from each pavement edge. (i.e. for a 5 in. (125 mm) lift the near edge of the core barrel shall be within 5.0 in. (125 mm) from the edge of pavement.)

2. QCP. The entire width of the pavement shall be used in calculating the transverse offset. No offset movement is to be used for random locations that lie within 1.0 ft from an unconfined edge. Cores taken within 1.0 ft from an unconfined edge will have 2.0% density added for pay adjustment calculation purposes. Random locations that fall within 4.0 in. of an edge shall be moved to 4.0 in. off the edge. See QCP example calculation herein.

B) This process shall be repeated for all density intervals on a given project.

C) Example Calculations.

PFP Example.

This **PFP** example illustrates the determination of the core locations within the first mile of a lot.

Given 1.5 in. thickness would require a density testing interval of 0.2 miles. The pavement consists of a 13.0 ft-wide mat with the left edge confined and the right edge unconfined. The random numbers for the longitudinal direction are 0.917, 0.289, 0.654, 0.347, and 0.777. The random numbers for the transverse direction are 0.890, 0.317, 0.428, 0.998, and 0.003.

The individual density test interval distances can be converted to the cumulative random distance using the following equation:

$$CD_n = [D \times (n-1)] + R_n$$

Where:

n = the density interval number
CD = cumulative distance
D = density testing interval length (typically 1056 ft (0.2 mile))
R = Random distance within the given density testing interval

The longitudinal core locations are determined by multiplying the longitudinal random numbers by 1056 ft (0.2 mile). The transverse core locations are determined by multiplying the transverse random number by the effective width of the paved mat.

Determine the effective lane width by subtracting 1.0 ft, for each unconfined edge, from the entire paved lane width. In this case only the right edge is unconfined, so subtract 1.0 ft from the entire paved lane width of 13.0 ft.

Effective Width = 13.0 ft minus 1.0 ft = 12.0 ft

PFP and QCP Random Density Procedure
Appendix E3

Effective: April 1, 2009
Revised: January 1, 2013

The random location for the first mile measured from the beginning of the lot and the left (confined) edge of the paved mat are as follows:

Core #	Longitudinal Location	Cumulative Distance	Transverse Location
1	1056 x 0.917 = 968 ft	1056 x (1-1) + 968 = 968 ft	12.0 x 0.890 = 10.7 ft
2	1056 x 0.289 = 305 ft	1056 x (2-1) + 305 = 1361 ft	12.0 x 0.317 = 3.8 ft
3	1056 x 0.654 = 691 ft	1056 x (3-1) + 691 = 2803 ft	12.0 x 0.428 = 5.1 ft
4	1056 x 0.347 = 366 ft	1056 x (4-1) + 366 = 3534 ft	12.0 x 0.998 = 11.7 ft
5	1056 x 0.777 = 821 ft	1056 x (5-1) + 821 = 5045 ft	12.0 x 0.003 = 0.0 ft = **0.3 ft**[1/]

1/ The 0.0 ft for Core #5 was moved in to 0.3 ft due to the 4 in. minimum from the edge requirement.

QCP Example.

This **QCP** example illustrates the determination of the core locations within the first mile of a project.

Given 1.5" thickness would require a density testing interval of 0.2 miles. The pavement consists of a 13.0 ft-wide mat with the left edge confined and the right edge unconfined. The random numbers for the longitudinal direction are 0.904, 0.231, 0.517, 0.253, and 0.040. The random numbers for the transverse direction are 0.007, 0.059, 0.996, 0.515, and 0.101.

The individual density test interval distances can be converted to the cumulative random distance using the following equation:

$$CD_n = [D \times (n-1)] + R_n$$

Where:

n = the density interval number
CD = cumulative distance
D = density testing interval length (typically 1056 ft (0.2 mile))
R = Random distance within the given density testing interval

The longitudinal core locations are determined by multiplying the longitudinal random numbers by 1056 ft (0.2 mile). The transverse core locations are determined by multiplying the transverse random number by the width of the paved lane (13.0 ft).

The random location for the first mile measured from the beginning of the lot and the left (confined) edge of the paved mat are as follows:

PFP and QCP Random Density Procedure
Appendix E3

Effective: April 1, 2009
Revised: January 1, 2013

Core #	Longitudinal Location	Cumulative Distance	Transverse Location
1	1056 x 0.904 = 955 ft	1056 x (1-1) + 955 = 955 ft	13.0 x 0.007 = 0.1 ft = **0.3 ft**[1/]
2	1056 x 0.231 = 244 ft	1056 x (2-1) + 244 = 1300 ft	13.0 x 0.059 = 0.8 ft
3	1056 x 0.517 = 546 ft	1056 x (3-1) + 546 = 2658 ft	13.0 x 0.996 = 13.0 ft = **12.7 ft**[2/]
4	1056 x 0.253 = 267 ft	1056 x (4-1) + 267 = 3435 ft	13.0 x 0.515 = 6.7 ft
5	1056 x 0.040 = 42 ft	1056 x (5-1) + 42 = 4266 ft	13.0 x 0.101 = 1.3 ft

1/ The 0.1 ft offset for Core #1 was moved in to 0.3 ft due to the 4 in. minimum from the edge requirement.

2/ The 13.0 ft offset for Core #3 was move in to 12.7 ft due the 4 in. minimum from the edge requirement. Since this core is within 1 ft from an unconfined edge 2% will be added to the measured core density.

PFP and QCP Random Density Procedure
Appendix E3

Effective: April 1, 2009
Revised: January 1, 2013

RANDOM NUMBERS

0.576	0.730	0.430	0.754	0.271	0.870	0.732	0.721	0.998	0.239
0.892	0.948	0.858	0.025	0.935	0.114	0.153	0.508	0.749	0.291
0.669	0.726	0.501	0.402	0.231	0.505	0.009	0.420	0.517	0.858
0.609	0.482	0.809	0.140	0.396	0.025	0.937	0.301	0.253	0.761
0.971	0.824	0.902	0.470	0.997	0.392	0.892	0.957	0.040	0.463
0.053	0.899	0.554	0.627	0.427	0.760	0.470	0.040	0.904	0.993
0.810	0.159	0.225	0.163	0.549	0.405	0.285	0.542	0.231	0.919
0.081	0.277	0.035	0.039	0.860	0.507	0.081	0.538	0.986	0.501
0.982	0.468	0.334	0.921	0.690	0.806	0.879	0.414	0.106	0.031
0.095	0.801	0.576	0.417	0.251	0.884	0.522	0.235	0.389	0.222
0.509	0.025	0.794	0.850	0.917	0.887	0.751	0.608	0.698	0.683
0.371	0.059	0.164	0.838	0.289	0.169	0.569	0.977	0.796	0.996
0.165	0.996	0.356	0.375	0.654	0.979	0.815	0.592	0.348	0.743
0.477	0.535	0.137	0.155	0.767	0.187	0.579	0.787	0.358	0.595
0.788	0.101	0.434	0.638	0.021	0.894	0.324	0.871	0.698	0.539
0.566	0.815	0.622	0.548	0.947	0.169	0.817	0.472	0.864	0.466
0.901	0.342	0.873	0.964	0.942	0.985	0.123	0.086	0.335	0.212
0.470	0.682	0.412	0.064	0.150	0.962	0.925	0.355	0.909	0.019
0.068	0.242	0.777	0.356	0.195	0.313	0.396	0.460	0.740	0.247
0.874	0.420	0.127	0.284	0.448	0.215	0.833	0.652	0.701	0.326
0.897	0.877	0.209	0.862	0.428	0.117	0.100	0.259	0.425	0.284
0.876	0.969	0.109	0.843	0.759	0.239	0.890	0.317	0.428	0.802
0.190	0.696	0.757	0.283	0.777	0.491	0.523	0.665	0.919	0.146
0.341	0.688	0.587	0.908	0.865	0.333	0.928	0.404	0.892	0.696
0.846	0.355	0.831	0.281	0.945	0.364	0.673	0.305	0.195	0.887
0.882	0.227	0.552	0.077	0.454	0.731	0.716	0.265	0.058	0.075
0.464	0.658	0.629	0.269	0.069	0.998	0.917	0.217	0.220	0.659
0.123	0.791	0.503	0.447	0.659	0.463	0.994	0.307	0.631	0.422
0.116	0.120	0.721	0.137	0.263	0.176	0.798	0.879	0.432	0.391
0.836	0.206	0.914	0.574	0.870	0.390	0.104	0.755	0.082	0.939
0.636	0.195	0.614	0.486	0.629	0.663	0.619	0.007	0.296	0.456
0.630	0.673	0.665	0.666	0.399	0.592	0.441	0.649	0.270	0.612
0.804	0.112	0.331	0.606	0.551	0.928	0.830	0.841	0.702	0.183
0.360	0.193	0.181	0.399	0.564	0.772	0.890	0.062	0.919	0.875
0.183	0.651	0.157	0.150	0.800	0.875	0.205	0.446	0.648	0.685

Note: Always select a new set of numbers in a systematic manner, either horizontally or vertically. Once used, the set should be crossed out.

This Page Reserved

PFP Hot Mix Asphalt Random Jobsite Sampling
Appendix E4

Effective: April 1, 2008
Revised: January 1, 2013

Hot-mix asphalt (HMA) samples shall be obtained at the frequency specified in the Hot Mix Asphalt Quality Control for Performance (QCP) and Pay for Performance (PFP) Using Percent within Limits special provisions.

The random jobsite mixture samples shall be taken at the randomly selected test location within a sublot. The random test location will be determined by the Engineer using the "Random Numbers" table as specified herein or an approved software program. This may be performed each day or predetermined for the project as per the Engineer. Regardless of when the values are determined, the values are to be considered confidential and are not to be disclosed to anyone outside of the Department. Disclosing the information would violate the intent of this procedure and federal regulations.

The sample location shall be determined by calculating the longitudinal distance the truck would travel to produce the random sample tonnage. The starting station for the longitudinal distance measurement is the location of the paver where the truck begins to unload the mixture into the paver or Material Transfer Device (MTD). Computations are made to the nearest foot (see examples in appendix herein).

If the paving is completed for a mixture before the specified sampling test location for the last mixture sublot is completed, a test will not be taken and the tonnage will be added to the current lot.

The Contractor may select either sampling behind the paver or sampling from the MTD discharge chute. The Contractor shall provide the necessary equipment and HMA Level I personnel to obtain the required samples, for whatever method is chosen, as specified herein.

A. Behind Paver Sampling.

This method covers the procedures for sampling HMA paving mixtures at the point of delivery immediately behind the paver and before initial compaction. This method is intended to provide a single composite sample that is representative of the mixture as produced (i.e. excludes paver effects).

1. <u>Equipment</u>

a) IDOT Approved Sampling Shovel (Fig. 1).

b) Sample Containers (4 each). Metal sample buckets with a minimum capacity of 3.5 gallons (13 liters).

c) IDOT Approved HMA Sample Splitter.

d) Plate/Shovel Sampling. The following additional equipment is needed when sampling HMA placed directly over a milled surface, rubblized concrete or an aggregate base.

1) Sampling Plates (4 each). The sampling plates shall be rectangular and have a minimum size of 14 x 28 inches (360 x 720 mm). Plates shall have a hole

approximately 0.25 inches (6 mm) in diameter drilled through each of the four corners.

2) Lifting Handles and Wire Lead. A 24 inch (600 mm) length of wire shall be attached to the two holes on one side of the plate to serve as lifting handle. An additional wire lead shall be attached to one of the lifting handles for locating the buried plate in the pavement. This wire shall extend to the edge of the pavement.

3) Hammer and masonry nails for securing plates and wire lead.

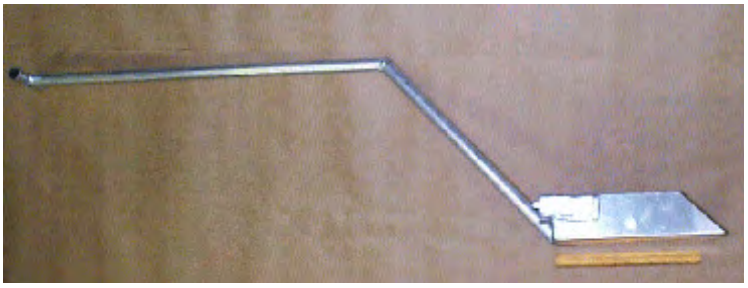

Overall Length = 5 feet
Shovel Width = 10 inches
Shovel Length = 12 inches
Shovel Sides = 4 inches

Figure 1. Aluminum Sampling Shovel & Dimensions

2. Shovel Sample Sampling Procedure (Without Plates). This method shall be used when sampling over smooth HMA and concrete surfaces.

   a) The sampling shovel shall be used at each of the four offsets illustrated in Figure 2. to dig directly downward into pavement until it comes into contact with the previous pavement surface. When in contact, the shovel shall be pushed forward until it is full. The shovel shall be lifted up slowly and carefully place the mix into the sample container in order to prevent any loss of HMA.

3. Shovel/Plate Sampling Procedure (With Plates). This method shall be used when sampling HMA directly over aggregate base, stabilized subbase, rubblized concrete, or a milled surface. This method may not be appropriate for 3/4 in. level binder over a milled surface. In the case of IL-4.75 mm or IL-9.5 FG mixtures, if approved by the Engineer, these mixtures may be shovel sampled from the auger area at the designated random location. Intentions of sampling IL-4.75 mm or IL-9.5 FG mixtures in this manner shall be listed in the approved QC Plan.

   a) Each plate with the wire lead attached to handle shall be placed at four locations according for Figure 2. at the designated location ahead of the paver. If conditions on the project require restricting movement of the plate, a nail shall be driven through one of the holes in the plate and into the pavement.

   b) The wire lead shall be extended beyond the edge of the pavement. Trucks, pavers, and/or materials transfer devices will be allowed to cross over the pate and/or wire lead.

   c) After the HMA is placed, the wire lead shall be used to locate the plate. Once located, the wire handles shall be lifted out of the pavement. This will locate the four corners of the plate.

   d) Once the plate edges are defined, the shovel shall be used to dig downward through the thickness of the pavement until it is in contact with the plate. The shovel shall be pushed forward until it is full. The shovel shall be lifted up slowly and carefully place the mix into the sample container in order to prevent any loss of HMA.

   e) Remove sampling plates from pavement.

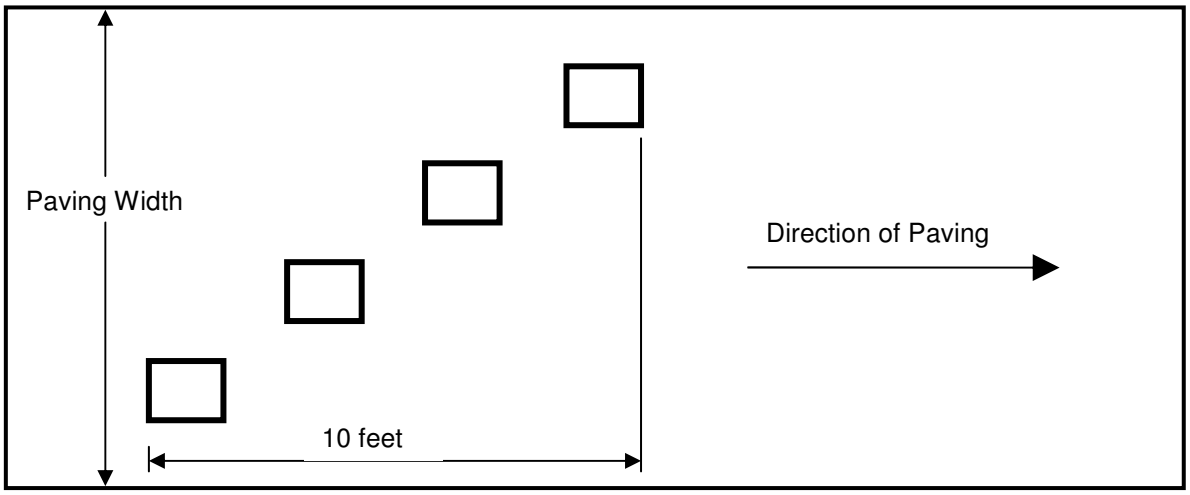

Figure 2. Behind Paver Sampling Layout

4. Composite/Lab Sample.

   a) HMA samples shall be taken, blended and split, using an IDOT approved HMA splitter, onsite by the Contractor and witnessed by the Engineer. The sample shall be taken immediately behind the paver and before initial roller compaction. One composite sample consists of four increments collected within 10 feet longitudinally and diagonally across the width of the paving operation (Fig. 2). The four increments shall be blended according to HMA Level I procedures to provide a single composite sample.

   b) Composite Sample.

      1) PFP. If the contractor elects to have the option to dispute test results by the Engineer, a composite sample size shall be a minimum of 200 lbs. (90 kg), allowing 50 lbs (23 kg) for District testing, 50 lbs. (23 kg) for Contractor testing, 50 lbs (23 kg) for dispute resolution testing, and 50 lbs. (23 kg backup for Department testing).

      2) QCP. A composite sample size shall be a minimum of 100 lbs. (45 kg), allowing 50 lbs. (23 kg) for District testing, and 50 lbs. (23 kg) for Contractor testing.

   c) Lab Sample.

      1) PFP. The minimum lab sample size of 50 lbs. (23 kg) shall be obtained by splitting the composite samples into four equal lab samples using an IDOT approved HMA splitter. The Engineer will secure three Department lab samples for the Contractor to transport to the District Materials Laboratory.

      2) QCP. The minimum lab sample size of 50 lbs. (23 kg) shall be obtained by splitting the composite samples into two equal lab samples using an IDOT approved HMA splitter. The Engineer will secure the Department lab sample for the Contractor to transport to the District Materials Laboratory.

5. Sample Site Repair

   a) HMA from the paver auger system shall be used to fill the voids left in the pavement from sampling. To reduce segregation and low density in the finished mat, buckets shall be used to fill the voids left by the samples.

      1) HMA from the augers system shall be placed in clean metal buckets just prior to sampling the pavement.

      2) The metal buckets shall be filled with approximately 25% more HMA than will be removed from the void.

   b) The bucket shall be dumped directly over the void.

c) The HMA shall be slightly leveled to provide a gradual hump over the filled void to allow compression of the mix by the roller.

d) Unacceptable site repair shall be removed and replaced at the Contractors expense.

B. MTD Sampling.

This method covers the procedures for sampling HMA paving mixtures at the point of delivery from a material transfer device (MTD).

1. Equipment.

a) MTD Sampling Device. A portable device mounted either in the bed of a pickup truck or on a trailer. The device shall be equipped with a funnel large enough to capture the full stream of HMA from the MTD discharge chute without spillage and shall be capable of capturing a minimum composite HMA sample of 200 lbs (90 kg). See appendix for illustrations of various MTD sampling device configurations.

b) Sample Containers – Metal containers each capable of holding a minimum of 50 lbs. of HMA.

2. MTD Sampling Procedure.

The Engineer will identify the truck containing the sample tonnage immediately prior to sampling. Immediately after the truck containing the random HMA tonnage has finished unloading, the MTD shall pull forward away from the paver far enough to allow the sampling device to be positioned under the MTD discharge chute. The sampling device shall be positioned as level as possible in a safe location readily accessible by the MTD. The MTD shall discharge without spillage a minimum of 200 lbs. (90 kg) of HMA for PFP or 100 lbs. (45 kg) for QCP into the funnel of the sampling device.

3. Composite/Lab Sample.

a) Composite Sample. HMA from all four sample containers of the sampling device shall be blended into one composite sample and split to lab sample size by the Contractor onsite using an IDOT approved HMA splitter. The blending and splitting shall be according to HMA Level I procedures and will be witnessed by the Engineer.

1) PFP. If the contractor elects to have the option to dispute test results by the Engineer, a composite sample size shall be a minimum of 200 lbs. (90 kg), allowing 50 lbs (23 kg) for District testing, 50 lbs. (23 kg) for Contractor testing, 50 lbs (23 kg) for dispute resolution testing, and 50 lbs. (23 kg backup for Department testing).

2) QCP. A composite sample size shall be a minimum of 100 lbs. (45 kg), allowing 50 lbs. (23 kg) for District testing, and 50 lbs. (23 kg) for Contractor testing.

b) Lab Sample.

1) PFP. The minimum lab sample size of 50 lbs. (23 kg) shall be obtained by splitting the composite samples into four equal lab samples using an IDOT approved HMA splitter. The Engineer will secure three Department lab samples for the Contractor to transport to the District Materials Laboratory.

2) QCP. The minimum lab sample size of 50 lbs. (23 kg) shall be obtained by splitting the composite samples into two equal lab samples using an IDOT approved HMA splitter. The Engineer will secure the Department lab sample for the Contractor to transport to the District Materials Laboratory.

C. Documentation – After the sample has been obtained, the following information shall be written on each sample bag or box with a felt tip marker.

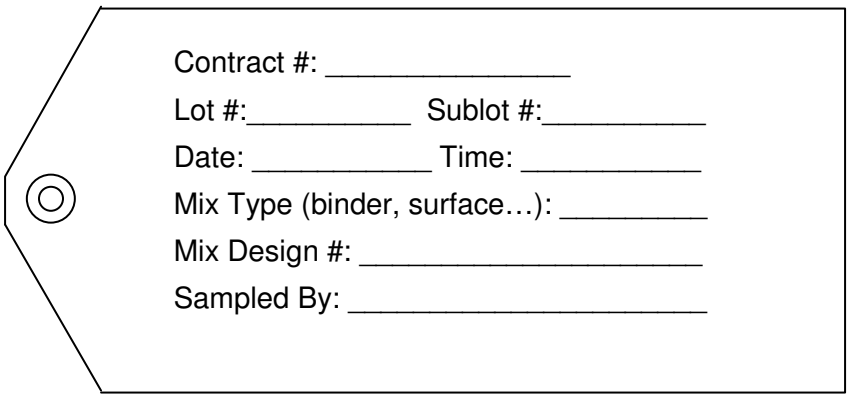

D. Sample Security – Each sample bag will be secured by the Engineer using a locking ID tag. Sample boxes will be sealed/taped using a security ID label.

E. Sample Transportation – The Contractor shall deliver the secured sample to the district laboratory, during regular working hours, for testing within two days of sampling.

F. Examples:

1. Behind Paver Sampling. Determination of random sample location for behind paver sampling.

This example illustrates the determination of the random behind the paver test location within a sublot:

Given a surface mix with a design Gmb of 2.400 is being placed 12 feet wide and 1.5 inches thick. The Engineer has elected to determine all the undisclosed random

tonnages prior to production. The plan quantity on the project was 10,000 tons and enough random values were determined to allow for a 5% overrun assuring enough random tonnages were generated. Ignore any random tonnages beyond what was placed on the project.

Sublot Number	Random Number	Sublot Tonnage	Cummulative Job Tonnage
1	0.1669	167	167
2	0.5202	520	1520
3	0.3000	300	2300
4	0.6952	695	3695
5	0.4472	447	4447
6	0.2697	270	5270
7	0.5367	537	6537
8	0.7356	736	7736
9	0.4045	405	8405
10	0.3356	336	9336
11	0.0899	90	10090

The truck containing the mix representing the 167 tons shall be the first sublot tested. The truck in question contains 160 to 172 cumulative tonnage to be placed on the project. Determine the random location by dividing the value of the selected truck tonnage to determine the random distance value to 3 decimal places.

167 – 160 = 7 (where the random ton falls within the truck)

7/(172-160) = 7/12 = 0.583 (random distance value)

Determine the distance using 58.3% of the distance the truck will pave using the following formula:

$$Longitudinal\ Distance = \frac{384.6 \times Tons \times RD}{Gmb \times width \times thickness}$$

Where:

Longitudinal Distance = Random distance from starting station (ft)
Tons = total tons within the sample truck
RD = random distance value as calculated above
Gmb = design Gmb for the mix being placed
Width = width of mat being paved (ft)
Thickness = thickness of mat being paved (in)

$$Longitudinal\ Distance = \frac{384.6 \times 12 \times .583}{2.400 \times 12 \times 1.5}$$

Longitudinal Distance = 62.3 Ft = 62 Ft.

Measure the calculated longitudinal distance from the starting station where the truck began to unload. Determine and document the random sample station and obtain the random mix sample as outlined herein.

Starting Station = 105 + 00
Random Sample Location = 105 + 00 + 62 = 105 + 62

This process shall be repeated for the subsequent sublots.

2. Examples of MTD Sampling Devices

PFP and QCP Hot Mix Asphalt Random Jobsite Sampling
Appendix E4

Effective: April 1, 2008
Revised: January 1, 2013

PFP and QCP Hot Mix Asphalt Random Jobsite Sampling
Appendix E4

Effective: April 1, 2008
Revised: January 1, 2013

RANDOM NUMBERS

0.576	0.730	0.430	0.754	0.271	0.870	0.732	0.721	0.998	0.239
0.892	0.948	0.858	0.025	0.935	0.114	0.153	0.508	0.749	0.291
0.669	0.726	0.501	0.402	0.231	0.505	0.009	0.420	0.517	0.858
0.609	0.482	0.809	0.140	0.396	0.025	0.937	0.301	0.253	0.761
0.971	0.824	0.902	0.470	0.997	0.392	0.892	0.957	0.040	0.463
0.053	0.899	0.554	0.627	0.427	0.760	0.470	0.040	0.904	0.993
0.810	0.159	0.225	0.163	0.549	0.405	0.285	0.542	0.231	0.919
0.081	0.277	0.035	0.039	0.860	0.507	0.081	0.538	0.986	0.501
0.982	0.468	0.334	0.921	0.690	0.806	0.879	0.414	0.106	0.031
0.095	0.801	0.576	0.417	0.251	0.884	0.522	0.235	0.389	0.222
0.509	0.025	0.794	0.850	0.917	0.887	0.751	0.608	0.698	0.683
0.371	0.059	0.164	0.838	0.289	0.169	0.569	0.977	0.796	0.996
0.165	0.996	0.356	0.375	0.654	0.979	0.815	0.592	0.348	0.743
0.477	0.535	0.137	0.155	0.767	0.187	0.579	0.787	0.358	0.595
0.788	0.101	0.434	0.638	0.021	0.894	0.324	0.871	0.698	0.539
0.566	0.815	0.622	0.548	0.947	0.169	0.817	0.472	0.864	0.466
0.901	0.342	0.873	0.964	0.942	0.985	0.123	0.086	0.335	0.212
0.470	0.682	0.412	0.064	0.150	0.962	0.925	0.355	0.909	0.019
0.068	0.242	0.777	0.356	0.195	0.313	0.396	0.460	0.740	0.247
0.874	0.420	0.127	0.284	0.448	0.215	0.833	0.652	0.701	0.326
0.897	0.877	0.209	0.862	0.428	0.117	0.100	0.259	0.425	0.284
0.876	0.969	0.109	0.843	0.759	0.239	0.890	0.317	0.428	0.802
0.190	0.696	0.757	0.283	0.777	0.491	0.523	0.665	0.919	0.146
0.341	0.688	0.587	0.908	0.865	0.333	0.928	0.404	0.892	0.696
0.846	0.355	0.831	0.281	0.945	0.364	0.673	0.305	0.195	0.887
0.882	0.227	0.552	0.077	0.454	0.731	0.716	0.265	0.058	0.075
0.464	0.658	0.629	0.269	0.069	0.998	0.917	0.217	0.220	0.659
0.123	0.791	0.503	0.447	0.659	0.463	0.994	0.307	0.631	0.422
0.116	0.120	0.721	0.137	0.263	0.176	0.798	0.879	0.432	0.391
0.836	0.206	0.914	0.574	0.870	0.390	0.104	0.755	0.082	0.939
0.636	0.195	0.614	0.486	0.629	0.663	0.619	0.007	0.296	0.456
0.630	0.673	0.665	0.666	0.399	0.592	0.441	0.649	0.270	0.612
0.804	0.112	0.331	0.606	0.551	0.928	0.830	0.841	0.702	0.183
0.360	0.193	0.181	0.399	0.564	0.772	0.890	0.062	0.919	0.875
0.183	0.651	0.157	0.150	0.800	0.875	0.205	0.446	0.648	0.685

Note: Always select a new set of numbers in a systematic manner, either horizontally or vertically. Once used, the set should be crossed out.

PFP and QCP Hot Mix Asphalt Random Jobsite Sampling
Appendix E4

Effective: April 1, 2008
Revised: January 1, 2013

PFP Jobsite Sampling Location Determination

Date: _____ Contract #: _____ Route: _____

Bit Mix #: _____ Bit Code: _____ Bit Desc.: _____

Design Gmb: _____ Pvt width(w): _____ Pvt thickness(t): _____

Lot #:		Sublot #:		Sampling Tonnage (st):	
Begin Truck Tons (b):				Longitudinal Distance(d): *(d)=[384.6(q)(rd)] / [Gmb(w)(t)]*	
End Truck Tons (e):				Starting Station(ss):	
Tons in Truck (q): *(q)=(e)-(b)*				Random sample location(rl): *(rl)=(ss)+/-(d)* *{add or subtract if up/down sta.}*	
Random Truck distance(rd): *(rd)=[(st)-(b)]/(q)*					

Lot #:		Sublot #:		Sampling Tonnage (st):	
Begin Truck Tons (b):				Longitudinal Distance(d): *(d)=[384.6(q)(rd)] / [Gmb(w)(t)]*	
End Truck Tons (e):				Starting Station(ss):	
Tons in Truck (q): *(q)=(e)-(b)*				Random sample location(rl): *(rl)=(ss)+/-(d)* *{add or subtract if up/down sta.}*	
Random Truck distance(rd): *(rd)=[(st)-(b)]/(q)*					

Lot #:		Sublot #:		Sampling Tonnage (st):	
Begin Truck Tons (b):				Longitudinal Distance(d): *(d)=[384.6(q)(rd)] / [Gmb(w)(t)]*	
End Truck Tons (e):				Starting Station(ss):	
Tons in Truck (q): *(q)=(e)-(b)*				Random sample location(rl): *(rl)=(ss)+/-(d)* *{add or subtract if up/down sta.}*	
Random Truck distance(rd): *(rd)=[(st)-(b)]/(q)*					

Lot #:		Sublot #:		Sampling Tonnage (st):	
Begin Truck Tons (b):				Longitudinal Distance(d): *(d)=[384.6(q)(rd)] / [Gmb(w)(t)]*	
End Truck Tons (e):				Starting Station(ss):	
Tons in Truck (q): *(q)=(e)-(b)*				Random sample location(rl): *(rl)=(ss)+/-(d)* *{add or subtract if up/down sta.}*	
Random Truck distance(rd): *(rd)=[(st)-(b)]/(q)*					

Illinois Department of Transportation

Instructions for Submitting Pay for Performance Dispute Resolution Samples
Appendix E5

Effective Date: April 1, 2010

A. Scope

The following guidelines are provided to clarify the district submittal requirements for dispute resolution samples; and expedite the testing process for HMA mix and/or core samples.

B. Procedure

When submitting HMA mix and/or core samples include the following:

- All District and Contractor split sample test results on attached "PFP Dispute Resolution Form",
- Submit entire dispute resolution HMA mix split sample,
- Cores must be split or sawed to lift testing thickness,
- QC Package template and dailies sent electronically for mix being tested.

Send sample and requested documentation to:

Illinois Department of Transportation
Bureau of Materials & Physical Research
Hot Mix Asphalt Laboratory
126 E. Ash Street
Springfield, Illinois 62704-4766
Attention: Joe Rechner *Joseph.Rechner@illinois.gov*

Any sample sent to BMPR without the above listed information will not be processed until all requested information is received.

Illinois Department of Transportation

PFP DISPUTE RESOLUTION

Contract # : _____
Dist. Lab ID # : _____
Mix Design # : _____
Mix Code # : _____
Producer # : _____

BMPR Lab #: _____
Wt. for Gmb: _____
Sampled From: Truck ___ Mat ___ MTD ___
Sample Date: _____
Date Received: _____

Mix Lot ___ Sublot ___

Sieve Size	**District** % Passing	**Contractor** % Passing	**BMPR** % Passing
1 ½ in (37.5 mm)			
1 in (25 mm)			
¾ in (19 mm)			
½ in (12.5 mm)			
3/8 in (9.5 mm)			
#4 (4.75 mm)			
#8 (2.36 mm)			
#16 (1.18 mm)			
#30 (.60 mm)			
#50 (.30 mm)			
#100 (.15 mm)			
#200 (.075 mm)			
Asphalt Binder %			
Dust/Asphalt Binder Ratio			
G_{mm}			
G_{mb}			
% Voids			
G_{sb}			
Field VMA			

CORES

	District	**Contractor**	**BMPR**
Core #	Gmm‡	Gmm	Gmm
Core #	Gmb	Gmb	Gmb
Core #	Density %	Density %	Density %

‡ This shall be the G_{mm} used for density calculation.

QCP Pay Calculation
Appendix E6

Effective: January 1, 2012
Revised: January 1, 2014

This document explains the procedure used to determine the pay adjustment for a hot-mix asphalt (HMA) mixture for Quality Control for Performance (QCP) projects.

The following steps are used to determine the pay deduction for each QCP mixture:

1. Determine sublot deviation from target for each pay parameter.
2. Determine the sublot pay factor for each sublot using the Table 1 and the deviation from target.
3. Determine the average sublot Pay Factor for each pay parameter.
4. Calculate a Combined Pay Factor using the average sublot Pay Factors and Equation 1.
5. Determine the QCP pay deduction for the mixture using Equation 2.
6. The Combined Pay Factor shall not exceed 100%.
7. The 103% column only applies when the district conducts testing of all the sublots within a given lot and all of the tests are within the Acceptable Limits. The 103% column also applies to density sublots where no individual density test is outside the acceptable limits. The average sublot Pay Factor for each pay parameter shall be capped at 100.0% prior to calculating the Combined Pay Factor.

Table 1

Parameter	Pay Factor			
	103%	100%	95%	90%
Voids[1/ 3/]	± 0.5%	± 1.2%	± 1.6%	± 2.0%
VMA [3/]	0% to +1.0% above minimum specified	-0.7% to +2.0%	-0.8% to +2.5%	-1.0% to +3.0%
Density[2/]	93.5% to 94.5%	92.5% to 96.5%	91.5% to 97.0%	90.0% to 98.0%
SMA	94.0% to 95.0%	93.5% to 96.5%	92.5% to 97.0%	92.0% to 98.0%
IL-9.5FG at < 1.25 in.	93.5% to 94.5%	91.0% to 96.5%	90.0% to 97.0%	89.0% to 98.0%

1/ Ranges based on deviation from the specified design percent Voids.
2/ If no density requirement applies the Contractor will receive 100% for the density pay factor in Equation 1.
3/ If mixture testing is waived for small tonnage, the Contractor will receive 100% for the Voids and VMA pay factors in Equation 1.

Equation 1: $CPF = 0.30(PF_{Voids}) + 0.30(PF_{VMA}) + 0.40(PF_{Density})$

Where: CPF = Combined Pay Factor

QCP Pay Calculation
Appendix E6

Effective: January 1, 2012
Revised: January 1, 2014

PF_{Voids}, PF_{VMA}, and $PF_{Density}$ = Average sublot pay factors for the pay parameters

The QCP deduction for a given mixture is calculated by multiplying the Mixture Unit Price by the Quantity and the CPF according to Equation 2 below.

Equation 2: QCP Deduction = (Mixture Unit Price x Mixture Quantity x CPF/100) – (Mixture Unit Price x Mixture Quantity)

Example:

Determine the QCP pay deduction for the given N70 HMA IL-12.5 surface mixture being placed at 1.5 inches thick as an overlay. The project consists of 6,900 tons placed over a distance of 12 lane miles.

Note that mix sample lots and density lots are independent of one another.

In this example the first mix lot represents 4,000 tons while the second lot represents 2,900 tons. There are 12 density sublots representing 12 lane miles (N=12, representing 12 miles x 5 cores/mile = 60 cores).

Mix sample: Each sublot represents 1000 tons except for lot 2, sublot 3 which represents 900 ton.

Lot	Sublot	Voids (Target = 4.0%)		VMA (Des. Min = 14.0%)	
		Contractor	District	Contractor	District
1	1	4.1		13.9	
	2	3.9	***3.2***	13.5	***13.3***
	3	2.5		13.0	
	4	3.0		13.8	
2	1	2.3	***2.5***	13.3	***13.4***
	2	2.1	2.2	13.0	13.1
	3	3.8	3.6	13.7	13.6

Note: Bolded and italicized test results denote the sublot split that was randomly selected by the District for testing.

Density: Since this pavement is < 3 inches thick, cores are taken randomly every 0.2 mile which is 5 cores per mile. Each density sublot represents 1 mile. Therefore with cores taken every 0.2 mile, the density sublot will represent the average of 5 density cores.

QCP Pay Calculation
Appendix E6

Effective: January 1, 2012
Revised: January 1, 2014

Density Sublot	Density Intervals (cores)				
	1	2	3	4	5
1	90.4	90.8	91.6	92.4	92.1
2	93.8	94.1	92.3	92.1	92.6
3	91.8	93.5	93.9	92.8	92.5
4	93.7	94.2	93.5	93.3	92.8
5	92.1	94.1	92.6	93.8	92.3
6	94.1	94.3	93.2	94.5	93.9
7	93.6	93.3	92.5	91.9	92.7
8	92.8	93.3	94.2	93.5	93.7
9	90.0	90.2	91.9	91.8	90.9
⋮	⋮	⋮	⋮	⋮	⋮
12	91.5	93.5	92.7	93.8	92.1

Determine the average sublot pay factor for each parameter:

Voids:

Since the District randomly selected and tested the split from sublot 2 in Lot 1, and the void results were 1) within the 100% pay factor tolerance **and** 2) within Precision Limits of the Contractor's results, the District does not need to test the remaining sublots in Lot 1 and the entire Lot receives a Pay Factor of 100%.

For the second Lot the District randomly selected and tested the split from sublot 1. Since the District void results were not within the 100% pay factor tolerance, the District had to test all of the remaining Sublot splits. (see completed table below):

Calculate the void deviation from target for each of the District sublot split results.

Lot 1:
Sublot 2: Deviation = 3.2% - 4.0% = -0.8%

Lot 2:
Sublot 1: Deviation = 2.5% - 4.0% = -1.5%
Sublot 2: Deviation = 2.2% - 4.0% = -1.8%
Sublot 3: Deviation = 3.6% - 4.0% = -0.4%

Using Table 1 and the deviation from Target, determine the corresponding Void sublot Pay Factor for each District test result.

Lot 1:
Sublot 2: Pay Factor associated with -0.8% in Table 1 is 100%

Lot 2:

Sublot 1: Pay Factor associated with -1.5% in Table 1 is 95%
Sublot 2: Pay Factor associated with -1.8% in Table 1 is 90%
Sublot 3: Pay Factor associated with -0.4% in Table 1 is 103%

Target Voids = 4.0%					
Lot	Sublot	Contractor	District	Deviation	Sublot PF
1	1	4.1	***3.2***	***-0.8***	***100.0***
	2	3.9			
	3	2.8			
	4	3.0			
2	1	2.3	***2.5***	***-1.5***	***95***
	2	2.1	2.2	-1.8	90
	3	3.8	3.6	-0.4	103

Note: Bolded and italicized test results denote the sublot split that was randomly selected by the District for testing.

Calculate the average sublot Pay Factor for Voids. (Note: The 100% in Lot 1 represents four sublots and therefore is multiplied by four)

Ave Sublot Pay Factor (PF_{Voids}) = ((100% X 4) + 95% + 90% + 103%) / 7 sublots = **98.3%**

VMA:

Since the District randomly selected and tested the split from Sublot 2 in Lot 1, and the VMA results were 1) within the 100% pay factor tolerance **and** 2) within Precision Limits of the Contractor's results, the District does not need to test the remaining sublots in Lot 1 and the entire Lot receives a Pay Factor of 100%.

For the second Lot the District randomly selected and tested the split from Sublot 1. Since the District results were not within the 100% pay factor tolerance **for Voids**, the District had to test all of the remaining sublot splits. (see completed table below):

Calculate the VMA deviation from target for each of the District sublot split results.

Lot 1:

Sublot 2: Deviation = 13.3% - 14.0% = -0.7%

Lot 2:

Sublot 1: Deviation = 13.4% - 14.0% = -0.6%
Sublot 2: Deviation = 13.1% - 14.0% = -0.9%
Sublot 3: Deviation = 13.6% - 14.0% = -0.4%

QCP Pay Calculation
Appendix E6

Effective: January 1, 2012
Revised: January 1, 2014

Using Table 1 and the deviation from Target, determine the corresponding VMA sublot pay factor for each District test result.

Lot 1:
Sublot 2: Pay Factor associated with -0.7% in Table 1 is 100%

Lot 2:
Sublot 1: Pay Factor associated with -0.6% in Table 1 is 100%
Sublot 2: Pay Factor associated with -0.9% in Table 1 is 90%
Sublot 3: Pay Factor associated with -0.4% in Table 1 is 100%

Minimum VMA = 14.0%					
Lot	Sublot	Contractor	District	Deviation	Sublot PF
1	1	13.9	***13.3***	***-0.7***	***100***
	2	13.5			
	3	13.4			
	4	13.8			
2	1	13.3	***13.4***	***-0.6***	***100***
	2	13.0	13.1	-0.9	90
	3	13.7	13.6	-0.4	100

Note: Bolded and italicized test results denote the sublot split that was randomly selected by the District for testing.

Calculate the average sublot pay factor for VMA. (Note: The 100% in Lot 1 represents four sublots and therefore is multiplied by four)

Ave Sublot Pay Factor (PF_{VMA}) = ((100% X 4) + 100% + 90% + 100%) / 7 sublots = **98.6%**

Density:

Determine the average density for each sublot.

Determine the sublot pay factor using the average sublot density and Table 1 (see completed table below).

Determine the Density pay factor by averaging the sublot pay factors.

QCP Pay Calculation
Appendix E6

Effective: January 1, 2012
Revised: January 1, 2014

Density Sublot	Density Intervals (cores)						
	1	2	3	4	5	Sublot Ave	Sublot PF
1	90.4	90.8	91.6	92.4	92.1	91.5	95
2	93.8	94.1	92.3	92.1	92.6	93.0	100
3	91.8	93.5	93.9	92.8	92.5	92.9	100
4	93.7	94.2	93.5	93.3	92.8	93.5	103
5	92.1	94.1	92.6	93.8	92.3	93.0	100
6	94.1	94.3	93.2	94.5	93.9	94.0	103
7	93.6	93.3	92.5	91.9	92.7	92.8	100
8	92.8	93.3	94.2	93.5	93.7	93.5	103
9	90.0	90.2	91.9	91.8	90.9	91.0	95
⋮	⋮	⋮	⋮	⋮	⋮	⋮	⋮
12	91.5	93.5	92.7	93.8	92.1	92.7	100
						Average Density Sublot PF =	99.9

Combined Pay Factor:

Determine the Combined Pay Factor using Equation 1.

$$CPF = 0.30(PF_{Voids}) + 0.30(PF_{VMA}) + 0.40(PF_{Density})$$

$$= 0.30(98.3) + 0.30(98.6) + 0.4(99.9)$$

$$CPF = 99.1\%$$

QCP Deduction:

Determine the QCP deduction pay for the given mixture using Equation 2.

QCP Deduction = (Mixture Unit Price x Mixture Quantity x CPF/100) – (Mixture Unit Price x Mixture Quantity)

Where: Mixture Unit Price = $65.00

Mixture Quantity = 6,900 tons placed.

QCP Deduction = ($65.00/ton x 6,900 tons x 99.1 / 100) – ($65.00/ton x 6,900 tons)
= - $4,036.50

In this case a $4,036.50 disincentive would be paid as per Construction Memorandum 10-4.

QCP Pay Calculation
Appendix E6

Effective: January 1, 2012
Revised: January 1, 2014

Full Depth Examples:

Given a full-depth project with two mixtures whose combined pay factors were determined to be 100.0% and 98.2%. The full-depth pay factor shall be calculated as follows:

100.0(1/2) + 98.2(1/2) = 99.1%

Determine the adjusted pay for the full-depth pay factor.

Given that the bid price per square yard = \$25.00 and 1400 yd^2 were placed.

Plan Unit Pay = \$25.00/ yd^2 * 1400 yd^2 = \$35,000

Adjusted Pay = \$25.00/ yd^2 * 1400 yd^2 * 0.991 = \$34,685

Difference = \$34,685 – \$35,000 = - \$315

Given a full-depth project with three mixtures whose pay factors were determined to be 98.9%, 100.0% and 99.2%. The full depth pay factor shall be calculated as follows:

98.9(1/3) + 100.0(1/3) + 99.2(1/3) = 99.4%

Determine the adjusted pay for the full-depth pay factor.

Given that the bid price per square yard = \$25.00 and 1400 yd^2 were placed.

Plan Unit Pay = \$25.00/ yd^2 * 1400 yd^2 = \$35,000

Adjusted Pay = \$25.00/ yd^2 * 1400 yd^2 * 0.994 = \$34,790

Difference = \$34,790 – \$35,000 = - \$210

This Page Reserved

Illinois Department of Transportation

Best Practices
For
Pay-For-Performance (PFP) and Quality Control for Performance (QCP)
Implementation
Appendix E7
Effective Date: April 1, 2012

Purpose
This document is intended to aid district personnel in successfully preparing for and implementing the Pay-For-Performance (PFP) and Quality Control for Performance (QCP) specifications.

Lab
Since payment on PFP and QCP projects is based on Department test results, attention to laboratory equipment, qualified lab personnel and laboratory efficiency becomes paramount. Review of results from recent "Annual Bituminous Uniformity Studies" (aka Round Robins) and dispute resolutions and addressing any district lab issues resulting in poor comparisons will prove beneficial.

1) Equipment - It is imperative to inspect and calibrate all laboratory testing equipment according to frequencies listed in Policy Memorandum 21-08.0 "Minimum Requirements For Construction Materials Testing Laboratories - Department Operated Laboratories" at a minimum. Inspection and calibration immediately prior to PFP and QCP testing is highly recommended. Always use the same gyratory compactor for a given PFP or QCP contract.

   Assessment of existing and needed equipment should be performed to determine possible benefits of purchasing additional equipment to optimize productivity. Each district should also develop an action plan in the event key equipment breaks down.

2) Personnel – It is also imperative that all laboratory personnel intended to be involved in PFP and QCP testing, be qualified with successful completion of HMA Level I as a minimum. Keep technician assignments as consistent as possible. It is highly recommended to conduct an in-house round robin with the above mentioned laboratory personnel to ensure repeatability.

3) Sample Treatment – Inconsistent treatment of samples prior to testing has been identified as the leading reason for differences in test results between the contractor and the state. It is recommended that samples, for all parties involved, be allowed to cool to room temperature immediately after splitting. The samples should then be reheated and compacted as soon as the samples reach compaction temperature.

4) Efficiency – PFP and QCP are based on Department testing which results in a higher testing frequency for the district laboratory. An internal audit of your district laboratory for efficiency may help identify ways to improve productivity. This activity should be conducted by district materials staff that are not involved in day-to-day testing, or BMPR staff if requested.

While the specification allows a 14 working day test turnaround time for PFP and a 10 day turnaround for QCP, the district should attempt to reduce the turnaround time as much as possible. Nationally recognized successful programs have test turnaround results within 5 days.

Project Personnel

Key components of PFP and QCP which provide the necessary compliance with the Code of Federal Regulations are 1) undisclosed random mix and density sample locations, 2) Sample either taken by the Engineer or witnessed by the Engineer, and 3) sample security. The CFR is intended to assure that the sample is under control of the Engineer at all times to verify the quality of the product. Most districts will need to rely on project staff to determine random mix sample and density core locations. It will be important for project personnel to understand their role in witnessing and securing the sample. District Materials and Construction staff should meet prior to the start of a PFP or QCP project to discuss:

1) Responsibilities:
    a) Discuss who will be responsible for sample identifying undisclosed sample location and sample layout
    b) Sample Security; discuss who will transport and / or store samples.
    c) Pay Calculations; discuss who will be responsible for entering data in software and how communication regarding pay factors will occur.
2) Procedures:
    a) Random sample locations
        i) Discuss when to disclose sampling location
        ii) Familiarize Construction personnel with random sample procedures detailed in the Manual of Test Procedures
    b) Sample Layout (utilization of random number table)
        i) Discuss how core densities will be:
            (1) transversely no closer than 1 foot to an unconfined longitudinal joint and 4 inches on a confined longitudinal joint for PFP.
            (2) transversely no closer than 4 inches from an edge for QCP.
        ii) Discuss how to handle coring locations that will need to be opened immediately to traffic

Also, it will be important to make sure Construction personnel have copies of all the necessary supporting documents.