Chapter Thirty-seven

INTERCHANGES

BUREAU OF DESIGN AND ENVIRONMENT MANUAL

Chapter Thirty-seven
INTERCHANGES

Table of Contents

Section **Page**

37-1 GENERAL 37-1.1

37-1.01 Responsibilities 37-1.1
37-1.02 Guidelines 37-1.2
37-1.03 New or Revised Interstate Access Approval 37-1.3

37-1.03(a) FHWA Regulations 37-1.3
37-1.03(b) Applicability 37-1.4
37-1.03(c) Processing Procedures 37-1.6
37-1.03(d) FHWA Approvals 37-1.8
37-1.03(e) Access Justification Report Contents 37-1.10

37-2 GENERAL DESIGN CONSIDERATIONS 37-2.1

37-2.01 Interchange Spacing 37-2.1
37-2.02 Basic Number of Lanes 37-2.1
37-2.03 Lane Balance 37-2.1
37-2.04 Capacity and Level of Service 37-2.3
37-2.05 Auxiliary Lanes 37-2.3
37-2.06 Route Continuity 37-2.4
37-2.07 Uniformity 37-2.4
37-2.08 Left-Hand Ramps 37-2.7
37-2.09 Signing and Marking 37-2.7
37-2.10 Ramp Metering 37-2.7
37-2.11 Weaving Sections 37-2.7
37-2.12 Grading and Landscaping 37-2.8
37-2.13 Review for Ease of Operation 37-2.8
37-2.14 Geometric Design Criteria 37-2.8
37-2.15 Operational/Safety Considerations 37-2.11
37-2.16 Distance Between Successive Freeway Ramp Terminals 37-2.13

37-3 INTERCHANGE TYPES AND LAYOUTS 37-3.1

37-3.01 General 37-3.1
37-3.02 Conventional Diamond 37-3.1

37-3.02(a) General 37-3.1
37-3.02(b) Left-Turn Lanes 37-3.4
37-3.02(c) Ramp/Crossroad Intersections 37-3.4
37-3.02(d) Ramp Layout 37-3.5

37-3.03 Modified Diamond 37-3.9

Table of Contents
(Continued)

Section **Page**

37-3.04 Compressed Diamond 37-3.11

37-3.04(a) General 37-3.11
37-3.04(b) Ramp/Crossroad Intersections 37-3.12

37-3.05 Single-Point Urban Diamond 37-3.14

37-3.05(a) General 37-3.14
37-3.05(b) Design Considerations 37-3.15

37-3.06 Full Cloverleafs 37-3.20

37-3.06(a) General 37-3.20
37-3.06(b) Design Considerations 37-3.22

37-3.07 Partial Cloverleafs 37-3.26

37-3.07(a) General 37-3.26
37-3.07(b) Two-Quadrant Parclo Interchange 37-3.34
37-3.07(c) Four-Quadrant Parclo Interchange 37-3.35

37-3.08 Trumpet Interchange 37-3.35

37-3.08(a) General 37-3.35
37-3.08(b) Design Considerations 37-3.38

37-3.09 Directional and Semi-Directional Interchanges 37-3.38
37-3.10 Diverging Diamond Interchange
(Double Crossover Diamond Interchange) 37-3.41
37-3.11 Selection 37-3.49

37-4 RAMP DESIGN 37-4.1

37-4.01 Ramp Types 37-4.1

37-4.01(a) Loop Ramps 37-4.1
37-4.01(b) Diagonal Ramps 37-4.1
37-4.01(c) Outer-Connector Ramps 37-4.1
37-4.01(d) Semi-Directional Ramps 37-4.3
37-4.01(e) Directional Ramps 37-4.3

37-4.02 Collector-Distributor Roadways 37-4.3

37-4.02(a) Usage 37-4.3
37-4.02(b) Design 37-4.4

HARD COPIES UNCONTROLLED

Table of Contents
(Continued)

Section **Page**

37-4.03 High-Speed Directional/Semi-Directional Roadways 37-4.4
37-4.04 Design Speed 37-4.11
37-4.05 Sight Distance 37-4.12
37-4.06 Cross Section Elements 37-4.16
37-4.07 Horizontal Alignment 37-4.17

37-4.07(a) Theoretical Basis 37-4.17
37-4.07(b) Design Controls 37-4.17
37-4.07(c) Length of Arc 37-4.18

37-4.08 Vertical Alignment 37-4.19

37-4.08(a) Grades 37-4.19
37-4.08(b) Vertical Curvature 37-4.19
37-4.08(c) Cross Sections Between Adjacent Ramps 37-4.20

37-4.09 Roadside Safety 37-4.20

37-5 RAMP/CROSSROAD INTERSECTIONS 37-5.1

37-5.01 General Design Criteria 37-5.1
37-5.02 Typical Intersection Designs 37-5.4

37-5.02(a) Diamond Interchange 37-5.4
37-5.02(b) Two-Quadrant Partial Cloverleaf Interchange 37-5.5
37-5.02(c) Four-Quadrant Partial Cloverleaf Interchange 37-5.19
37-5.02(d) Compressed Diamond with Slip Ramps 37-5.19

37-5.03 Crossroad Access Control 37-5.25

37-6 FREEWAY RAMP TERMINALS 37-6.1

37-6.01 Exit Ramp Terminals 37-6.1

37-6.01(a) Types 37-6.1
37-6.01(b) Sight Distance 37-6.4
37-6.01(c) Alignment 37-6.4
37-6.01(d) Superelevation and Cross Slopes 37-6.18
37-6.01(e) Gore Area 37-6.19
37-6.01(f) Structures 37-6.21

37-6.02 Entrance Ramps 37-6.21

37-6.02(a) Types 37-6.21
37-6.02(b) Length 37-6.27

HARD COPIES UNCONTROLLED

Table of Contents
(Continued)

Section **Page**

37-6.02(c) Sight Distance 37-6.29
37-6.02(d) Superelevation and Cross Slopes 37-6.29
37-6.02(e) Gore Area 37-6.29

37-6.03 Ramp/Roadway Divergence Applications 37-6.30

37-6.03(a) Major Divergences 37-6.30
37-6.03(b) Minor Divergences 37-6.30

37-6.04 Ramp/Roadway Convergence Applications 37-6.30

37-6.04(a) Major Convergences 37-6.30
37-6.04(b) Minor Convergences 37-6.36

37-7 REFERENCES 37-7.1

HARD COPIES UNCONTROLLED

Chapter Thirty-seven
INTERCHANGES

AASHTO defines an interchange as a system of interconnecting roadways in conjunction with one or more grade separations that provide for the movement of traffic between two or more roadways on different levels. The operational efficiency, capacity, safety, and cost of the highway facility are largely dependent upon its design. Chapter 37 provides guidance in the design of interchanges including interchange types, selection, layout, operations, spacing, freeway ramp terminals, ramps, and ramp/crossroad terminals. Information that is also applicable to interchanges is included in the following chapters:

- Chapter 15 discusses the procedures and content for interchange type and design studies.
- The application of bicycle lanes through interchanges is discussed in Chapter 17.
- Chapter 35 discusses access control along interchange crossroads.
- Chapter 36 discusses intersection designs, including left and right-turn lanes, channelizing islands, turning radii, design vehicles, sight distance requirements, etc.
- Chapter 44 discusses freeway new construction and reconstruction design criteria, lane drops, frontage roads, grade separations, and access control along the freeway.
- Chapter 50 discusses freeway 3R design criteria.
- The warrants and design criteria for interchange lighting are discussed in Chapter 56.
- Guidance on interchange and/or ramp/crossroad terminal intersection traffic control devices, including striping, signing, and traffic signals is discussed in Chapter 57.
- Accessibility for persons with disabilities, including the design of compliant curb ramps, crosswalks, and roadway approach grades at interchange ramp/crossroad terminals is discussed in Chapter 58.

37-1 GENERAL

37-1.01 Responsibilities

The district is responsible for determining the need for, location of, type of, and design of interchanges. For interchange types other than the conventional diamond and parclo Type C, BDE involvement in type studies is recommended because of the larger number of alternatives requiring analysis and the typically higher costs; see Chapter 15.

37-1.02 Guidelines

The need for an interchange will vary based on site-specific conditions. Consider the following guidelines when determining the need for and practicality of an interchange:

1. Access Control. The following will apply:

   a. Full Access Control. On all fully access-controlled facilities, intersecting crossroads must be terminated, rerouted, provided a grade separation, or provided an interchange. The importance of the continuity of the crossroad, the feasibility of an alternative route, traffic volumes, construction costs, environmental impacts, etc., are evaluated in order to determine which option is most practical. Interchanges generally are provided at:

      - all freeway-to-freeway crossings;
      - all major highways, unless determined inappropriate; and
      - other highways based on the anticipated demand for regional access.

   b. Partial Access Control. On facilities with partial access control (expressways), intersections with public roads will be accommodated by an interchange, an intersection, and occasionally a grade separation. Refer to Section 45-1.03 for the decision-making process for the treatment of crossroads at expressways.

   c. No Access Control. On a facility with no access control, the need for an interchange will be determined on a case-by-case basis emphasizing cost effectiveness, safety, and operations. A road-user benefit analysis will generally be required to determine the economic feasibility of an interchange. See Item 5. However, this analysis alone is not sufficient justification for the provision of an interchange.

2. Congestion. Consider providing an interchange where the level of service (LOS) at an intersection is unacceptable, and the intersection cannot be redesigned to operate at an acceptable LOS.

3. Safety. In special cases, consider the crash reduction benefits of an interchange at an existing intersection that exhibits extremely high-crash frequencies and rates.

4. Site Topography. Where access is necessary, the topography may dictate an interchange or a grade separation rather than an intersection.

5. Road-User Benefits. If an analysis reveals that road-user benefits over the service life of the interchange will exceed costs, then an interchange may be considered. The designer must consider all costs including right-of-way, construction, maintenance, and user costs in the analysis. For additional guidance, the designer may refer to the AASHTO publication, *A Manual on User Benefit Analysis of Highway and Bus-Transit Improvements*.

HARD COPIES UNCONTROLLED

6. Access. An interchange may be required in an area where access availability from other sources is not practical, and the freeway is the only facility that serves the area.

7. Traffic Volumes. Although there are no specific traffic volumes that warrant an interchange, consider providing an interchange where the traffic volumes at an intersection are at or near capacity and where other improvements are not practical.

37-1.03 New or Revised Interstate Access Approval

37-1.03(a) FHWA Regulations

The FHWA states, in their current *Policy on Access to the Interstate System* that it is in the national interest to preserve and enhance the Interstate System to meet the needs of the 21st Century by assuring that it provides the highest level of service in terms of safety and mobility. Full control of access along the mainline and ramps, along with control of access on the crossroad at interchanges, is critical to providing such service. Therefore, an FHWA decision to approve new or revised access points to the Interstate System under Title 23, United States Code (U.S.C.), Section 111, must be supported by substantiated information justifying and documenting that decision.

Section 111 of Title 23, *United States Code* (23 U.S.C. 111) identifies that all agreements between FHWA and IDOT for the construction of projects on the Interstate System must contain a clause that IDOT will not add any points of access to, or exit from, the project in addition to those approved by FHWA in the plans for the project, without the prior approval of FHWA. 23 CFR 625 designates those criteria and policies that are acceptable to FHWA for the geometric and structural design of highways, including Interstate facilities.

The original FHWA policy regarding new or revised access points to existing Interstate facilities was first published in the *Federal Register (55 Fed. Reg. 42670)* on October 22, 1990, revised in the February 11, 1998 *Federal Register (63 Fed. Reg. 7045)*, and then revised again in the August 27, 2009 *Federal Register (74 Fed. Reg. 43743)*. The February 1998 revision incorporates the planning requirements of the *1991 Intermodal Surface Transportation and Efficiency Act*, clarifies the coordination between the access request and environmental procedures, and updates the policy language at various locations. The August 2009 revisions were made to reflect the direction provided in the *Safe, Accountable, Flexible, Efficient Transportation Equity Act: A Legacy for Users* (SAFETEA–LU), to clarify the operational and safety analysis and assessment of impacts that provides the basis for proposed changes in access to the Interstate System, and to update language at various locations to reference Federal laws, regulations, and FHWA policies. Additional guidance from FHWA Headquarters office was established in 1996 and 1997. This guidance allowed FHWA Division Offices to approve more Interstate revisions in access and established a two-step process for approving these changes. Finally, on May 22, 2017, FHWA clarified its policy for documenting new or revised access points on the Interstate system, including separation of issues related to engineering, operations, and safety (to be included within Illinois as part of an Access

Justification Report) from other issues such as planning requirements and land use (to be included in NEPA documents).New or revised access points to the existing Interstate System will be reviewed against the criteria in Section 37-1.03(b). Sections 37-1.03(d) and 37-1.03(e) define the information required to be included in final submittals to FHWA when requesting approval for revisions in Interstate access. Section 37-1.03(c) provides the procedures for obtaining approvals from IDOT and/or FHWA.

37-1.03(b) Applicability

New and/or revised access points that degrade mainline operations or safety should be minimized on existing fully access-controlled facilities. Avoiding such degradation is the primary focus of FHWA and BDE reviews and approval.

Each entrance and exit point on the mainline, including “locked gate” access (e.g., utility opening), is defined as an access point. For example, a standard diamond interchange configuration has four access points. Revised access is considered to be a change in the existing interchange configuration although the number of access points may not change. For example, replacing one of the direct ramps of a diamond interchange with a loop or changing a cloverleaf interchange into a fully directional interchange is considered to be a revised access.

The criteria in Section 37-1.03 is applicable to new or revised access points to existing fully access-controlled facilities (Interstate and non-Interstate facilities) regardless of the funding source. Consequently, it applies to private developers, and any changes to an access-controlled facility, which may be required of the private developer by IDOT or a local agency.

Each access revision will need to be analyzed on a case-by-case basis. Consider the following:

1. Revisions Requiring BDE/FHWA Access Approval. The following revisions to access-controlled facilities are considered changes in access and will require BDE/FHWA access approval:

   - new freeway-to-freeway interchange;
   - major modification of freeway-to-freeway interchange configuration (e.g., adding new ramp(s), abandoning/removing ramp(s), completing basic movements);
   - new partial interchange or new ramps to-from a continuous frontage road that creates a partial interchange (e.g., slip ramps);
   - new freeway-to-crossroad interchange (e.g., addition of a combination of on-ramps and off-ramps);
   - modification of existing freeway-to-crossroad interchange configuration (e.g., replacing one of the direct ramps of a diamond interchange with a loop);
   - completion of basic movements at a partial interchange (e.g., completing a partial diamond interchange by adding a ramp, the addition of any on- or off-ramp to the mainline);

HARD COPIES UNCONTROLLED

- locked gate access (e.g., access via locked gates by privately employed personnel); and
- abandonment of ramps or interchanges.

2. Revisions Requiring BDE Access Approval. The following revisions to, and immediately-adjacent to, access-controlled facilities are not considered a change in access and do not require FHWA access approval; however, these typically do require BDE approval:

   a. Ramp/Crossroad Improvements. This includes the addition of left-turn storage lanes, right-turn storage lanes, and/or through travel lanes at the local road end of exit ramps. These additions will inherently and expeditiously increase ramp safety for ramps that chronically back-up onto the mainline travel lanes, by shortening the queue lengths and minimizing the occurrence of high-speed, rear-end collisions. Ensure that adequate stopping sight distance, decision sight distance, geometrics, etc., are provided. Any ramp/ crossroad intersection improvements (e.g., constructing roundabouts) should be assessed regarding both capacity and safety performance.

   b. Ramp Relocation. This includes relocation or shifting of existing crossroad/ramp termini (i.e., moving the ramp end that connects with the local road). The designer must ensure that adequate stopping sight and decision sight distance are provided at the ramp terminals.

   c. Services Ramps. Ramps providing access to rest areas, information centers, and weigh stations within the Interstate controlled access are not considered access points requiring FHWA approval. These facilities can only be accessible to vehicles to and from the Interstate System. Access between these facilities and local roads or adjoining property is prohibited. The only allowed exception is for access to adjacent publicly owned conservation and recreation areas, if access to these areas is only available through the rest area, as allowed under 23 CFR 752.5(d).

   d. Auxiliary Lanes. This includes the addition of a single auxiliary lane between two adjacent interchange ramps. The single auxiliary lane should not function as a mainline travel lane and must be shown to provide both operational and safety benefits.

   e. Acceleration and Deceleration Lanes.

      i. Decreasing the Length. Prior to decreasing the length of these types of lanes, conduct an HSM safety analysis by analyzing the crash history and future crash potential. Also review sight distance and ensure appropriate signing revisions are provided.

      ii. Increasing the Length. f the adjacent upstream on-ramp or adjacent downstream off-ramp exists at a distance equal to or less than the criteria

in Section 37-2.16 (i.e., measured between physical gore areas), conduct an operational analysis (e.g., weaving, capacity, signing). The spacing between interchanges should safely accommodate weaving, diverging, merging maneuvers, and provide for good directional signing.

iii. Design Exceptions. If design criteria cannot be met, request a design exception for the improvement. See Section 31-7 for the procedures for obtaining a design exception.

f. Addition of On-Ramp Lanes. This consists of adding a lane to a single lane on-ramp, resulting in a two-lane on-ramp. Conduct an operational analysis (e.g., weaving, capacity, signing) to show operational and safety benefits.

g. Traffic Signals. This includes traffic signalization improvements at ramp termini with local roads. Improvements in the level-of-service for the ramp leg traffic at the exit ramp terminal must be shown.

h. Signing and Pavement Markings. This includes new signing, striping, and/or resurfacing of an on-ramp or off-ramp where geometric features are not changed.

i. Roadside Safety. Installation of roadside guardrail or barriers (e.g., for resurfacing and safety projects) will not require access approval.

37-1.03(c) Processing Procedures

BDE and FHWA must approve all proposed changes in access, in accordance with the list in Section 37-1.03(b), along the Interstate System. For proposed changes in access on non-Interstate freeways, BDE and/or the Bureau of Operations will review and approve any access changes; FHWA will not be regularly involved for these facilities.

The following procedures are applicable where 1) the highway is on the State highway system and Federal funds were used for right-of-way and/or construction costs of the roadway segment; and 2) the highway is access controlled and the proposed access revisions will modify previous commitments made in environmental documents:

1. Environmental Procedures. The FHWA revised access approval constitutes a Federal action and, as such, requires that the transportation planning, conformity, congestion management process, and the *National Environmental Policy Act* (NEPA) procedures be followed and their requirements satisfied. NEPA procedures also apply even when changes to an Interstate facility are being financed completely by the State, local municipality, or a private developer. The NEPA procedures will be accomplished as part of the normal project development process and as a condition of the access approval. The district will determine the type and scope of the necessary environmental process in cooperation with FHWA; see Chapter 22. Generally, this will occur at scheduled district coordination meetings. Compliance with the NEPA procedures should proceed concurrently with the analyses to determine engineering acceptability and feasibility.

HARD COPIES UNCONTROLLED

Although compliance with the NEPA procedures need not precede the determination of engineering acceptability and feasibility, the FHWA Illinois Division Office will not give final access approval before the completion of the NEPA process.

2. Secondary Impacts. Determine the secondary impacts associated with the proposed access revisions based on traffic-induced impacts on the State highway facility and on the potential environmental impacts on the surrounding area. Because the area of influence on the highway facilities and surrounding land use will vary, describe the limits of influence for each case prior to determining impacts.

3. Outside Agency Proposals. The district will recommend whether IDOT or the agency requesting the revision will conduct the studies. BDE will review and approve Phase I reports.

4. FHWA Coordination. BDE usually will review and approve the interchange type and interchange design studies (IDS) using the Department's Certification Acceptance procedures except where the action is proposed on the Interstate system. For Interstates, FHWA must also agree on the type and the design details, see Sections 37-1.03(d) and 37-1.03(e). IDOT must discuss with FHWA any proposed access control revisions on the NHS at scheduled district coordination meetings.

5. Central Office Processing. Access control revisions along a freeway will be processed by the Central Office in the following manner:

   a. Bureau of Operations. In general, proposed revisions in the access control along freeways and along interchange crossroads on the State highway system will be reviewed and processed by the Bureau of Operations except where location/design studies are necessary and/or where IDOT construction funds are used in the action.

   b. BDE. Where design studies and/or construction funds are used in the proposed action requiring access control revisions, BDE will review and process the proposed action.

   c. Freeway Orders. Projects involving a revision to an existing Freeway Order will be handled by either BDE or the Bureau of Operations up to the stage where a Freeway Order revision is filed for approval. After this stage, BDE will process the revision of the Freeway Order.

   d. Impact Assessments. Where assessments of the impacts of proposed access control revisions are required, BDE will determine what elements should be considered in the review and processing of the assessment. Proposed access changes should be discussed at district coordination meetings and then submitted for review early in the NEPA process. This procedure will allow for a timely determination of engineering and operational acceptability and will ensure that the proposed design is acceptable for inclusion as an alternative in the environmental process.

e. Overlapping. Where the criteria are overlapping, unclear, or there is uncertainty about who is responsible for conducting the review and processing of the request, BDE and the Bureau of Operations will coordinate to determine which Bureau will take responsibility for the request.

f. FHWA Approval. BDE will work with the district to submit an Access Justification Report (AJR) to the FHWA Division Office for review, comment and approval. This submission will be a "stand-alone" document that will show reasonable care has been performed and confirm future safety and traffic operations along the Interstate corridor will not be adversely affected by the proposed new or revised Interstate access. Section 37-1.03(d) further discusses FHWA approvals.

g. Filing. BDE will retain on file the approved revision in access submittal.

6. Coordination Meetings. The agendas for scheduled district coordination meetings should clearly distinguish projects involving proposed access control revisions from other projects. Furnish this information in adequate time to allow either BDE or Bureau of Operations to facilitate their attendance.

37-1.03(d) FHWA Approvals

FHWA approval is required where there are new or revised access points to the Interstate System. The following will apply to Interstate routes:

1. Design Criteria. All FHWA approvals for new, added or revised access are conditioned upon IDOT complying with all applicable Federal rules and regulations. For Illinois, the design criteria are contained in the *BDE Manual* and the *Illinois Highway Standards* which meet or exceed the criteria presented in the AASHTO publications, *A Policy on Geometric Design of Highways and Streets* and *A Policy on Design Standards - Interstate System*.

2. FHWA Concept Approval. Concept approval is the first step in the FHWA approval process and involves a determination of safety, engineering, and operational acceptability. Ideally, it should be done as soon as the Department has a good understanding of the proposed scope of the improvement. The FHWA Division Office and IDOT will develop a consensus on proposed access concepts at coordination meetings. FHWA concept approval will need to be received from either the FHWA Headquarters Office or from the FHWA Illinois Division Office as in accordance with the following:

   a. FHWA Headquarters Concept Approval. Concept review and approval is required from the FHWA Headquarters (HQ) Office for the specific major Interstate access requests that are listed below. IDOT will send three copies of the official transmittals requesting FHWA HQ concept approval, and local FHWA Division Office final approval, will need to be sent to the FHWA Division Office. Note that advance coordination with the FHWA HQ Office may be necessary,

HARD COPIES UNCONTROLLED

and appropriate, on certain complex and/or controversial projects that will require FHWA HQ concept review and approval during the project's environmental process. In these cases, IDOT should coordinate directly with the local FHWA Division Office. The FHWA HQ Office concept approval is required for the following types of Interstate revised access:

- new freeway-to-freeway interchange,
- major modification of freeway-to-freeway interchange configuration,
- new partial interchange or new ramps to/from continuous frontage road that create a partial interchange, and
- new freeway-to-crossroad interchange located in a Transportation Management Area (TMA).

b. FHWA Illinois Division Office Concept Approval. The FHWA Division Office and the Department will develop a consensus on proposed access concepts at coordination meetings, which are subsequently documented in the Access Justification Report (AJR); see Section 37-1.03(e). FHWA Division Office concept approval will be given by the FHWA Division Administrator. IDOT will send the AJR to the FHWA Division Office with signature lines for the FHWA Division Office Field Engineering Manager (FEM) (recommend approval) and for the FHWA Division Office Division Administrator (for approval). The signed AJR will document FHWA concept approval. Once signed, the AJR will be sent back to IDOT. The FHWA Division Office gives concept approval for the following types of Interstate revised access:

- new freeway-to-crossroad interchange not located in a TMA,
- modification of existing freeway-to-crossroad interchange configuration,
- completion of basic movements at partial interchange,
- locked gate access, and
- abandonment of ramps or interchanges.

3. FHWA Final Approval. The FHWA Division Administrator gives final approval for all types of Interstate access changes. Concept Approval and completion of the NEPA process are needed for the Final Approval of Access Revision. No additional information is required for the final approval request unless any conditions previously noted in the AJR have changed substantially.

4. Reevaluation. An affirmative determination by FHWA of engineering and operational acceptability for proposals for new or revised access points to the Interstate System should be reevaluated whenever a significant change in conditions occurs (e.g., land use, traffic volumes, roadway configuration or design, environmental commitments). Proposals must be reevaluated if the project has not progressed to construction within

eight years of receiving an affirmative determination of engineering and operational acceptability (23 CFR 625.2(a)). If the project is not constructed within this time period, an updated Access Justification Report based on current and projected future conditions must be submitted to FHWA to receive either an affirmative determination of engineering and operational acceptability, or final approval if all other requirements have been satisfied.

37-1.03(e) Access Justification Report Contents

All requests for new or revised access points on completed Interstate highways must closely adhere to the planning and environmental review processes as required in 23 CFR 450 and 771. As part of their May 22, 2017, Policy on Access to the Interstate System, the FHWA moved documentation for issues not directly related to engineering, operations, and safety of Interstate access changes (all but two points, numbered 13 and 18 in the list below) out of the AJR and solely into other required NEPA documentation. Refer also to Section 37-1.03(c). The final FHWA approval of requests for new or revised access, the *acceptability determination*, cannot precede the completion of NEPA processes. The AJR provides a primary basis for a timely approval decision by the FHWA and IDOT on new or revised access.

To provide for an efficient review IDOT continues to require that a wide range of information be included within the AJR, although many points may be briefly summarized. The AJR must include the information described below in 20 points:

1. Description. Provide a description of the proposed new or revised access. It is acceptable to present more than one alternative, with identification of a preferred design.

2. Purpose. Describe the purpose and need specifically related to the new or revised access point. Project purpose and need is typically a product derived from discussions by the project scoping team and with input from an array of project stakeholders. The new or revised access point may be one element of an overall project.

3. Cost. Include the estimated total cost of the overall project and the new or revised access point.

4. Background Information. Provide any additional background support information to explain and/or support the access proposal (e.g., developer input, known public opposition, status of the NEPA process, summary of input received from public meetings, sources of project funding, and implementation schedule).

5. Concerns. List any known areas of concern (e.g., operational, environmental, safety) in the direct vicinity of the access change. Always include a crash history summary for all new or revised access requests. The project must include proposed mitigation measures to improve the safety issues identified here. FHWA and IDOT must be convinced that there will be steps taken to improve safety and operations of the Interstate facility itself.

HARD COPIES UNCONTROLLED

6. Communities. Note the distances to and size of communities or facilities directly served.

7. Connections. Describe the relationship and distance of the interchange to adjacent interchanges, the adequacy of acceleration, deceleration and weaving lengths, and the ability to provide adequate signing.

8. Design Exceptions. Clearly identify any necessary design exceptions from current BDE design criteria; see Section 31-7.

9. Traffic Signals/Signing. Include a conceptual plan of the type and location of the signs proposed to support the preferred alternative. Identify locations of additional proposed traffic signalization, if applicable.

10. Lane Balance. Describe how the interchange will provide lane balance with a consistent basic number of lanes.

11. Alternative Existing Facility Improvements. Show that all reasonable alternatives, including improvements to the existing local roads and streets in lieu of new freeway access, have been properly considered. Could streets generally parallel to the Interstate facility be used as connections to existing adjacent interchange ramps in lieu of adding a new interchange or ramps? Could improvements such as access control along surface streets, improving traffic control, modifying ramp terminals and intersections, adding turn bays or lengthening storage satisfactorily accommodate the design-year traffic demands? Diagrammatic figures may be helpful in describing the alternatives assessed. Designers must demonstrate that an access point is needed for regional traffic needs and not to solve local system problems. The freeway facility must primarily serve regional traffic.

12. Alternative Mainline or Transportation System Management Improvements. Explain whether transportation system management type improvements (such as ramp metering, mass transit, and HOV facilities), and/or geometric design improvements to the Interstate, could address existing issues without the proposed change in access.

13. Access Connections and Design. FHWA policy states: “The proposed access connects to a public road only and will provide for all traffic movements. Less than “full interchanges” may be considered on a case-by-case basis for applications requiring special access, such as managed lanes (e.g., transit or high occupancy vehicle and high occupancy toll lanes) or park and ride lots. The proposed access will be designed to meet or exceed current standards (23 CFR 625.2(a), 625.4(a)(2), and 655.603(d)). In rare instances where all basic movements are not provided by the proposed design, the report should include a full interchange option with a comparison of the operational and safety analyses to the partial interchange option. The report should also include the mitigation proposed to compensate for the missing movements, including wayfinding signage, impacts on local intersections, mitigation of driver expectation leading to wrong-way movements on ramps, etc. The report shall describe whether future provision of a

full interchange is precluded by the proposed design." Partial interchanges usually have undesirable operational characteristics. If circumstances exist where a partial interchange is considered appropriate, then commitments to the FHWA, possibly even purchase of necessary right-of-way during the initial project stage for future completion, must be made by IDOT. Special purpose access for HOV's, for transit vehicles, or for park and ride lots should be treated as special cases and the movements to be provided decided on a case-by-case basis.

14. Transportation Land Use Plans. Show that the proposal considers and is consistent with local and regional land use and transportation plans and that necessary coordination has begun. Prior to Phase I approval, new or revised access must be included in a Metropolitan Transportation Plan, a Statewide or Metropolitan Transportation Plan (STIP or TIP), and a Congestion Management Process(as applicable).

15. Comprehensive Interstate Network Study. If applicable, analyze and consider all proposed changes in access for an area at the same time. If a new or revised interchange is being proposed and another new or revised adjacent interchange is being planned and programmed by IDOT then analyze both changes together.

16. Coordination with Transportation System Improvements. If the new or revised access point is in part due to a new, expanded, or substantial change in current or planned future development or land use, demonstrate coordination has occurred with the property developers. Describe the commitments agreed upon to assure adequate collection and dispersion of the traffic resulting from the development with the adjoining local street network and Interstate access point. It is incumbent upon IDOT to ensure that highway facilities are developed in an orderly and coordinated manner to serve the public. The developer might, for example, be required to have certain parts of the local circulation system ready before ramps can be constructed or opened to traffic.

17. Status of Planning and NEPA. Confirm and report information relative to the status of the planning and NEPA processes.

18. Operational and Safety Analyses. FHWA policy states: "An operational and safety analysis has concluded that the proposed change in access does not have a significant adverse impact on the safety and operation of the Interstate facility (which includes mainline lanes, existing, new, or modified ramps, and ramp intersections with crossroad) or on the local street network based both the current and the planned future traffic projections. The analysis should, particularly in urbanized areas, include at least the first adjacent existing or proposed interchange on either side of the proposed change in access (23 CFR 625.2(a), 655.603(d) and 771.111(f)). The crossroads and the local street network, to at least the first major intersection on either side of the proposed change in access, should be included in this analysis to the extent necessary to fully evaluate the safety and operational impacts that the proposed change in access and other transportation improvements may have on the local street network (23 CFR 625.2(a) and 655.603(d)). Requests for a proposed change in access should include a description and assessment of the impacts and ability of the proposed changes to safely

HARD COPIES UNCONTROLLED

and efficiently collect, distribute and accommodate traffic on the Interstate facility, ramps, intersection of ramps with crossroad, and local street network (23 CFR 625.2(a) and 655.603(d)). Each request should also include a conceptual plan of the type and location of the signs proposed to support each design alternative (23 U.S.C. 109(d) and 23 CFR 655.603(d))."

Highway Safety Manual methods, or other approved safety analysis methodologies, will be used to present a robust assessment of the potential safety effects of the changes in access. Typically, the current *Highway Capacity Manual* analysis procedures will be used for the operational analyses. Refer to #20 below for the specific tables, maps, and outputs required to summarize the operational analyses.

Analyze safety and operations on the mainline between the proposed new/revised access and the adjacent existing interchanges on either side. Extend the analyses as far along the mainline as is necessary to establish the extent and scope of the impacts. In urban areas with several relatively closely-spaced interchanges more than three locations may need to be included.

The safety and operational analyses must use current traffic data and extend to a design year that is 20 years after the date when the construction is scheduled to be complete.

Include the following in the analyses:

- Summarize the crash history of the affected Interstate segment, provide a comparison of this history with statewide averages for comparable facilities, and identify any over-represented crash types on the affected Interstate segment.
- Identify the anticipated safety implications of the proposed access point on mainline Interstate traffic, and at applicable nearby interchanges. Of critical importance are the geometrics associated with the proposal and shifts in nearby traffic patterns. Include a brief concluding statement summarizing the level of impact the proposed access point change is expected to have on safety performance of the mainline Interstate facility.
- Summarize the level of impact the proposed access point change is expected to have on traffic flow performance of the mainline Interstate facility.

The safety and operational analyses should typically include or directly refer to some or all of the information in Items 19 and 20.

19. Interchange Drawing. For the preferred and analyzed alternative, provide a dimensioned, detailed drawing of the design elements and a comparison to existing conditions. Include, as applicable:

- project limits,
- adjacent interchange(s),
- ramp to be added and removed,

- relocation of ramp gores,
- travel lanes and shoulder widths,
- ramp radii,
- ramp grades,
- acceleration lane lengths,
- deceleration lane lengths,
- taper lengths,
- auxiliary lane lengths,
- auxiliary/operational lane(s), and
- collector/distributor road(s).

Together, the drawing and report should identify all presently known pertinent engineering design details of the proposed change. Clearly identify any design exceptions and compare them with the latest BDE and AASHTO criteria.

Include a separate drawing showing the traffic volumes for all turning movements as well as mainline, ramp, and local road traffic volumes. Include current and design year ADTs and DHVs (Refer to the following section for details).

20. Highway Capacity Analysis. Use the current version of the *Highway Capacity Software* (HCS), for the operational analyses, supplemented by modeling as agreed by BDE and FHWA. Include all the following information and engineering analyses unless otherwise agreed to by BDE and FHWA:

    a. Existing Peak Hour Volumes. Provide a plan view map, with ramps and mainline through lanes labeled with Existing “AM Peak Hour” and “PM Peak Hour” volumes.

    b. Design Year No-Build Peak Hour Volumes. Provide a plan view map, with ramps and mainline through lanes labeled with the Design Year No-Build “AM Peak Hour” and “PM Peak Hour” volumes.

    c. Design Year Build Peak Hour Volumes. Provide a plan view map, with ramps and mainline through lanes labeled with the Design Year Build “AM Peak Hour” and “PM Peak Hour” volumes.

    d. Summary of Operational Analysis. As applicable, provide a table listing the “Freeway LOS”, “Ramp LOS”, “Weave LOS”, and “Non-Weave LOS” for the corresponding Existing AM/PM, Design Year “No-Build” AM/PM, and Design Year “Build” AM/PM for on-ramps, off-ramps, and through lanes.

    e. Existing Peak Hour Levels of Service. Provide a plan view map, with ramps, mainline through lanes, and crossroads labeled with calculated Existing “AM Peak Hour Level of Service” values and “PM Peak Hour Level of Service” values.

HARD COPIES UNCONTROLLED

f. Design Year No-Build Peak Hour Levels of Service. Provide a plan view map, with ramps, mainline through lanes, and crossroads labeled with calculated Design Year No-Build "AM Peak Hour Level of Service" values and "PM Peak Hour Level of Service" values.

g. Design Year Build Peak Hour Levels of Service. Provide a plan view map, with ramps, mainline through lanes, and crossroads labeled with calculated Design Year Build "AM Peak Hour Level of Service" values and "PM Peak Hour Level of Service" values.

h. Basic Freeway Segments Analyses of Existing Conditions. Provide program outputs for adjacent freeway segments.

i. Basic Freeway Segments Analyses of the Design Year "No-Build" Conditions. Provide program outputs for all adjacent freeway segments.

j. Basic Freeway Segments Analyses of the Design Year "Build" Conditions. Provide program outputs for all adjacent freeway segments.

k. Ramp Junction Analyses of the Existing Conditions. Provide program outputs for all ramp junctions.

l. Ramp Junction Analyses of the Design Year "No-Build" Conditions. Provide program outputs, including queue analysis, for all ramp junctions.

m. Ramp Junction Analyses of the Design Year "Build" Conditions. Provide program outputs, including queue analysis, for all ramp junctions.

n. Weave Area Analyses of the Existing Conditions. Provide program outputs for all weaving areas.

o. Weave Area Analyses of the Design Year "No-Build" Conditions. Provide program outputs for all weaving areas.

p. Weave Area Analyses of the Design Year "Build" Conditions. Provide program outputs for all weaving areas.

37-2 GENERAL DESIGN CONSIDERATIONS

37-2.01 Interchange Spacing

Where interchanges are spaced farther apart, freeway operations, level of service, and safety between connecting facilities are improved. Desirably, the spacing between interchanges on the average should not be less than 2 miles (3 km) in urban areas, 4 miles (6 km) in suburban areas, and 7.5 miles (12 km) in rural areas. These values allow adequate distances for an entering driver to adjust to the freeway environment, for proper weaving maneuvers between entrance and exit ramps, and for adequate signing distances. However, considering the effects of existing streets and highways, traffic operations, and social considerations, the spacing between adjacent interchanges may vary considerably. The minimum distance between adjacent interchanges should not be less than 1 mile (1.5 km) in urban areas, 2 miles (3 km) in suburban areas, and 3 miles (5 km) in rural areas. In urban areas, a spacing of less than 1 mile (1.5 km) may be developed by using grade-separated ramps or collector-distributor roads.

37-2.02 Basic Number of Lanes

The basic number of lanes is the minimum number of lanes designated and maintained over a significant length of a route based on the overall operational needs of that section. The number of lanes should remain constant over short distances. For example, do not drop a lane at the exit of a diamond interchange and then add it at the downstream entrance simply because the traffic volume decreases between the exit and entrance ramps. Likewise, do not drop a basic lane between closely spaced interchanges simply because the estimated traffic volume does not warrant the higher number of lanes. Lane drops should only occur where there is general lowering of the traffic volumes on the freeway route as a whole.

37-2.03 Lane Balance

Lane balance refers to certain principles that apply at freeway exits and entrances:

1. Exits. The number of approach lanes on the highway should equal the sum of the number of mainline lanes beyond the exit plus the number of exiting lanes minus one; see Figure 37-2.A. An exception to this principle would be at cloverleaf loop ramp exits that follow a loop ramp entrance or at exits between closely spaced interchanges (e.g., interchanges where the distance between the taper end of the entrance terminal (1 ft (300 mm) stub) and the beginning taper (1 ft (300 mm) stub) of the exit terminal is less than 1500 ft (450 m) and a continuous auxiliary lane is used between the terminals). In these cases, the auxiliary lane may be dropped at a single-lane exit with the number of lanes on the approach roadway being equal to the number of through lanes beyond the exit plus the lane on the exit.

2. Entrances. At entrances, the number of lanes beyond the merging of the two traffic streams should be not less than the sum of the approaching lanes minus one; see Figure 37-2.A.

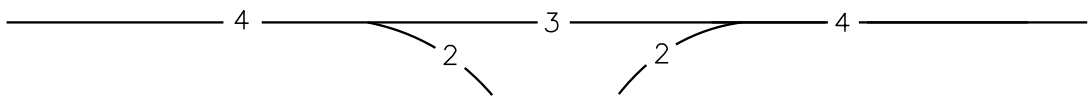

LANE BALANCE BUT NO COMPLIANCE WITH BASIC NUMBER OF LANES

-A-

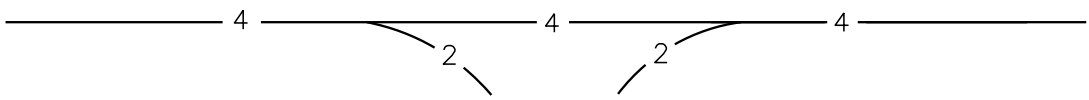

NO LANE BALANCE BUT COMPLIANCE WITH BASIC NUMBER OF LANES

-B-

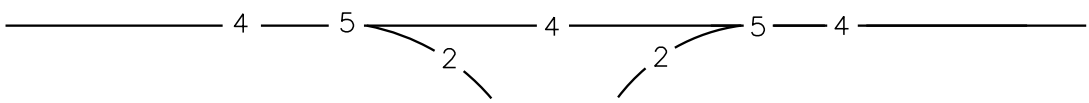

COMPLIANCE WITH BOTH LANE BALANCE AND BASIC NUMBER OF LANES

-C-

$N_C = N_F + N_E - 1$

Max: $N_C = N_F + N_E$

Min: $N_C = N_F + N_E - 1$

Where:

N_C = Number of Lanes for Combined Traffic

N_F = Number of Lanes on Freeway

N_E = Number of Lanes on Exit or Entrance Ramp

LANE BALANCE EQUATIONS

-D-

COORDINATION OF LANE BALANCE AND BASIC NUMBER OF LANES

Figure 37-2.A

HARD COPIES UNCONTROLLED

3. Travel Lanes. Reduce the number of travel lanes on the freeway only one lane at a time.

For example, dropping two mainline lanes at a two-lane exit ramp would violate the principle of lane balance. One lane should provide the option of remaining on the freeway. Lane balance would also prohibit immediately merging both lanes of a two-lane entrance ramp into a highway mainline without the addition of at least one additional lane beyond the entrance ramp. Figure 37-2.A illustrates how to coordinate lane balance and the basic number of lanes at an interchange. Figure 37-2.A also illustrates how to achieve lane balance at the merging and diverging points of branch connections.

37-2.04 Capacity and Level of Service

The capacity of an interchange will depend upon the operation of its individual elements that include:

- basic freeway section where interchanges are not present,
- freeway ramp terminals,
- weaving areas,
- ramp proper,
- collector-distributor roadways, and
- ramp/crossroad intersections.

The basic capacity reference is the *Highway Capacity Manual* (HCM). The HCM and the *Highway Capacity Software* (HCS) provide the analytical tools required to analyze the level of service for each element listed above. Other capacity analysis programs and techniques may be used provided they are approved by BDE. To be eligible for approval, the output results of other programs and techniques must compare closely with the HCS.

Level of service values presented in Chapter 44 for freeways will also apply to interchanges. Desirably, the level of service of each interchange element should be equal to the level of service provided on the basic freeway section. Individual elements should not operate at more than one level of service below that of the basic freeway section. In addition, the operation of the ramp/crossroad intersection in urban areas should not impair the operation of the mainline. This will likely involve a consideration of the operational characteristics on the minor road for some distance in either direction from the interchange. For most projects, the district geometrics engineer will be responsible for conducting or reviewing the capacity analysis at interchanges.

37-2.05 Auxiliary Lanes

As applied to interchange design, auxiliary lanes are most often used to comply with the principle of lane balance, to increase capacity, to accommodate weaving, or to accommodate entering and exiting vehicles. Operational efficiency of the freeway may be improved if a continuous auxiliary lane is provided between entrance and exit terminals where interchanges

are closely spaced. An auxiliary lane may be dropped at an exit if properly signed and designed. The following statements apply to the use of an auxiliary lane within or between interchanges:

1. Within Interchange. Figure 37-2.B provides the basic schematics of alternative designs for adding and dropping auxiliary lanes within interchanges. The selected design will depend upon traffic volumes for the exiting, entering, and through movements.

2. Between Interchanges. Where interchanges are closely spaced, the designer should provide an auxiliary lane where the distance between the taper end of the entrance terminal and beginning taper of the exit taper is less than 1500 ft (450 m). Figure 37-2.C illustrates where an auxiliary lane is used between two closely spaced interchanges.

Auxiliary lane drops beyond the interchange may be merged approximately 2500 ft (750 m) beyond the influence of the last interchange. Design details for auxiliary lane drops beyond an interchange are provided in Chapter 44. Design details for dropping auxiliary lanes at exits or adding them at entrances are provided in Section 37-6. If the auxiliary lane is dropped at a single lane exit, a recovery area beyond the gore should be provided as shown in Figure 37-2.B. Where certain sight distance restrictions are unavoidable (e.g., on structures), the recovery area should be extended 500 ft to 1000 ft (150 m to 300 m) downstream from the exit. This distance should be increased to 1500 ft (450 m) or more with complex designs.

37-2.06 Route Continuity

The major route should flow continuously through an interchange. For freeway and expressway routes that change direction, the driver should not be required to change lanes or exit to remain on the major route. Route continuity without a change in the basic number of lanes is consistent with driver expectancy, simplifies signing, and reduces the decision demands on the driver. Interchange configurations should not necessarily favor the heavier traffic movement. Other marked routes that turn or exit at an interchange can be accomplished by a single-lane ramp if capacity is adequate. If these ramps are longer than ½ mile (800 m), consider providing a two-lane ramp for better traffic operations.

37-2.07 Uniformity

Interchange configurations should be uniform from one interchange to another. All ramps should exit and enter on the right except under highly unusual conditions. Dissimilar arrangements between interchanges can cause confusion resulting in undesirable lane switches, reduced speeds, etc., especially in urban areas where interchanges are closely spaced.

HARD COPIES UNCONTROLLED

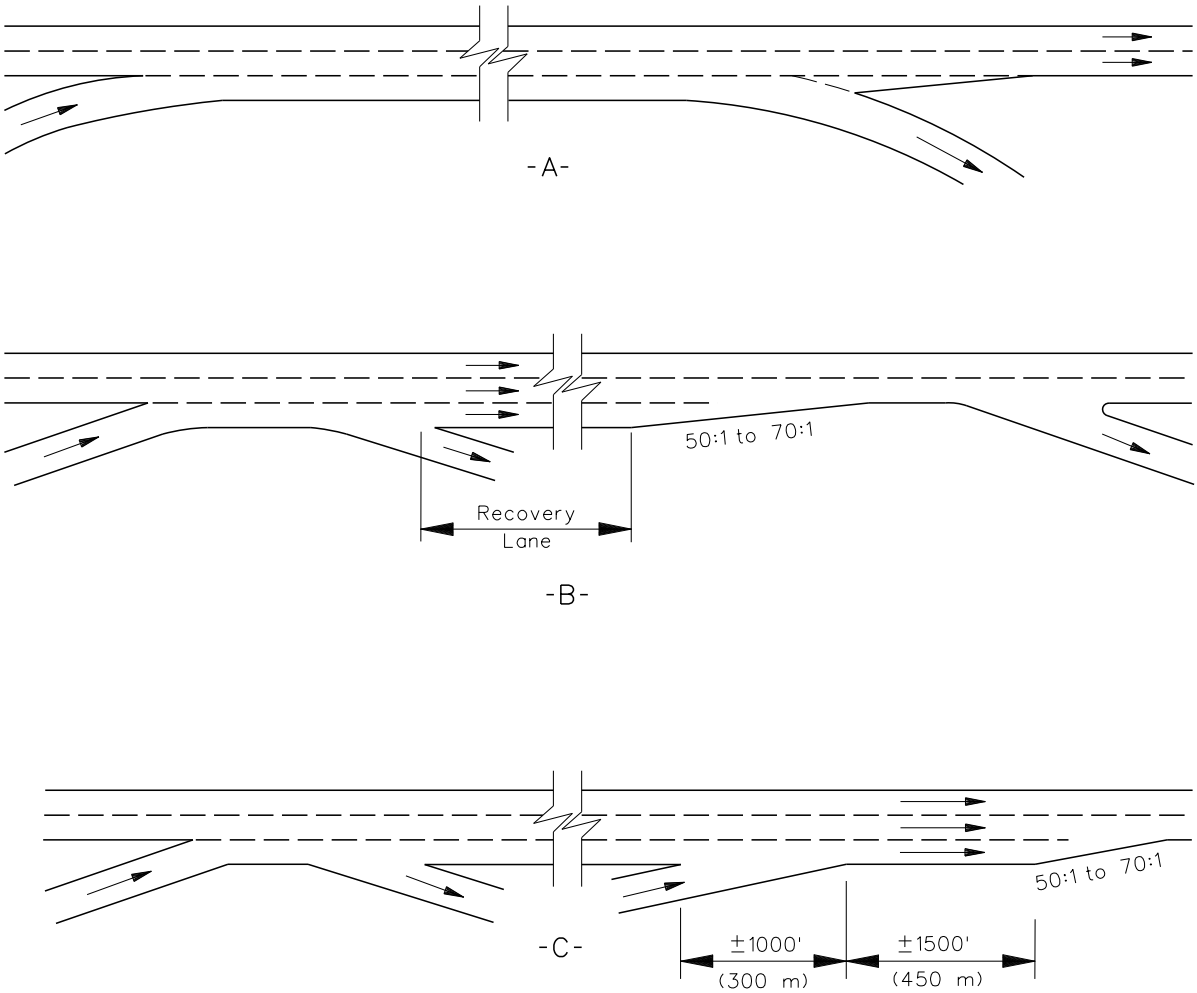

AUXILIARY LANES WITHIN AN INTERCHANGE

Figure 37-2.B

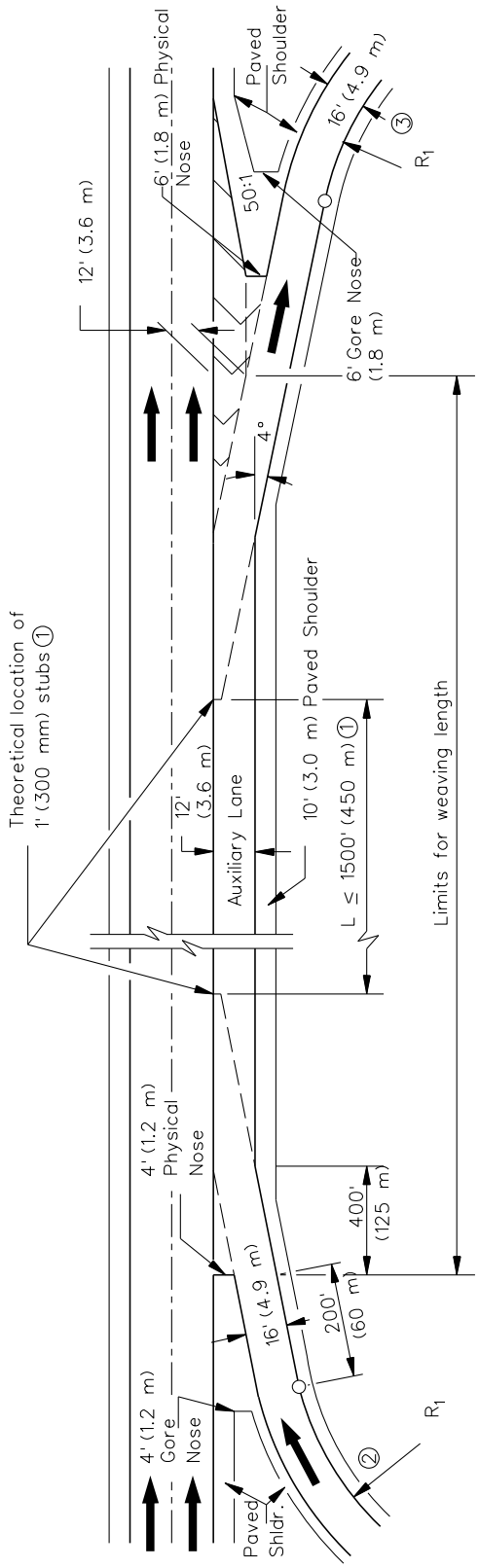

Notes:

1. *If the distance between the theoretical 1 ft (300 mm) stubs is less than or equal to 1500 ft (450 m), provide an auxiliary lane connecting the entrance terminal to the exit terminal even if the auxiliary lane would not be required by a weaving analysis.*
2. *See Figure 37-6.L for Entrance Ramp Terminal with auxiliary lane.*
3. *See Figure 37-6.B for Exit Terminal with auxiliary lane.*

AUXILIARY LANE BETWEEN TWO INTERCHANGES

Figure 37-2.C

HARD COPIES UNCONTROLLED

37-2.08 Left-Hand Ramps

Avoid the use of left-hand exit and entrance ramps. They are less efficient operationally than right-hand ramps and may present a serious crash potential. They also introduce an undesirable element of non-uniformity into the design of a freeway system that leads to confusion and, in some cases, hazardous behavior by drivers. The disadvantages of left-hand ramps greatly outweigh the potential for directional turning movements and the increased flexibility of design. Therefore, where a left-hand ramp is being considered, approval of the design and analysis must be obtained from BDE for the Interchange Design Study (IDS).

37-2.09 Signing and Marking

Proper interchange operations depend partially on the compatibility between its geometric design and the traffic control devices at the interchange. The proper application of signs and pavement markings will increase the clarity of paths to be followed, safety, and operational efficiency. The logistics of signing along a highway segment will also impact the minimum acceptable spacing between adjacent interchanges. See the Bureau of Operations Departmental Policy TRA-14, and use the current edition of the Bureau of Operation's *Traffic Policies and Procedures Manual*, the *Pavement Marking Selection, Installation, and Inspection Manual*, the *Manual on Uniform Traffic Control Devices,* and the *Illinois Highway Standards* to select and design the appropriate pavement markings and crosswalks at interchanges. Chapter 57 provides general guidelines for the placement of pavement markings and reflectorized markers. For complex interchanges and location/design studies involving closely spaced interchanges, include a preliminary signing plan with the IDS.

37-2.10 Ramp Metering

Ramp metering may be used to improve freeway operations. Ramp metering consists of traffic signals installed on entrance ramps before the entrance terminal to control the number of vehicles entering the freeway. The Bureau of Operations will determine the need for ramp metering. If ramp metering is used, the designer will need to coordinate with the Bureau of Operations to determine the placement of the ramp signal to ensure that there is sufficient storage area before the ramp signal and that sufficient acceleration distance is available beyond the signal to allow a vehicle to reach the freeway operating speed.

37-2.11 Weaving Sections

Weaving sections are highway segments where the pattern of traffic entering and exiting at contiguous points of access results in vehicular paths crossing each other. The turbulent effect of weaving operations can result in reduced operating speeds and levels of service for the through traffic. Weaving sections may be eliminated at an interchange between two major highways by using directional or semi-directional connections or by using collector-distributor roadways.

Consider the following for weaving sections:

1. Weave Length. Weaving sections on freeways other than cloverleafs should be at least 1000 ft (300 m) or the length determined using the *Highway Capacity Manual* (HCM), whichever is greater. Section 37-3.06(b) discusses the minimum design criteria for one-sided weaving sections at cloverleaf interchanges.

2. Level of Service. The level of service of a weaving section should be the same as the adjacent mainline; however, at a minimum, it can be one level lower. A higher volume in weaving sections may be accommodated and their adverse impact on through traffic minimized by providing the weaving section on collector-distributor roadways. Section 37-4.02 discusses the use and design of collector-distributor roadways.

37-2.12 Grading and Landscaping

Consider the grading around an interchange early in the design process. Alignment, fill and cut sections, median widths, lane widths, drainage, structural design, and infield contour grading, all affect the aesthetics of the interchange. Properly graded interchanges allow the overpassing structure to blend naturally into the terrain. In addition, ensure that the crossroad and ramp slopes are not too steep to compromise safety and that they can support plantings that prevent erosion and enhance the appearance of the area. Flatter slopes also allow easier maintenance. Transitional grading between cut and fill slopes should be long and natural in appearance. The designer must ensure that plantings will not affect the sight distance within the interchange and that larger plantings are a significant distance from the traveled way. See Chapter 59 for additional guidelines.

37-2.13 Review for Ease of Operation

Review the proposed design from the driver's perspective. Examine all possible movements that a motorist might encounter. Several computer programs are available that allow a designer to test drive the design. Review the plans for areas of possible confusion, sufficient weaving and sight distances, proper signing, and ease of operation.

37-2.14 Geometric Design Criteria

Design all roadways through an interchange with the same criteria as used for the approaches including design speed, sight distance, horizontal and vertical alignment, cross section, and roadside safety elements. The applicable chapters in Parts IV, Roadway Design Elements, and V, Design of Highway Types, present the geometric design criteria that apply to the roadways through interchanges. In addition, consider the following:

1. Functional Classification. Determine the crossroad functional classification using the criteria in Chapter 43.

2. Design Year. Typically, use a 20-year design period based on the anticipated opening date of the facility.

HARD COPIES UNCONTROLLED

3. Design Speed. The crossroad design speed will be based on its functional classification and its urban or rural classification; see the geometric design tables in Part V, Design of Highway Types. For rural crossroads (e.g., county highways, township roads), the minimum design speed of the crossroad through the interchange should be 55 mph (90 km/hr).

4. Horizontal Alignment. In general, lay out the alignment of the freeway/expressway and crossroad through the interchange on a tangent. Where this is not practical, consider the following:

   a. Freeway Mainline. Avoid curves to the left.

   b. Freeway Ramp Terminals. Lay out the freeway alignment so that only one exit terminal departs from the mainline curving to the right, or design the mainline curve to lie entirely within the limits of the interchange and away from the exit and entrance terminals.

   c. Superelevation. Desirably, lay out the horizontal alignment so that superelevation and superelevation transitions will not be required through the freeway ramp terminals or through the ramp/crossroad intersection.

   d. Crossroad. Where a curve is necessary, provide a significantly large horizontal curve so that superelevation is not required on the crossroad.

   e. Structures. For a freeway or expressway over a crossroad, place the PC or PT of the horizontal curve 400 ft (120 m) or more from the back of the bridge abutment.

5. Vertical Alignment. Vertical profiles for both roadways through the interchange should be as flat as practical. Where compromises are necessary, use the flatter grade on the major facility. In addition, the designer should consider the following:

   a. Sight Distance. To improve the sight distance to exit gores, locate exit ramp terminals and major divergences where the mainline is on an upgrade.

   b. Ramps. Avoid creating a hidden ramp roadway in the vertical plane. Also, provide flat approach grades adjacent to the crossroad. For additional information on storage platforms at the ramp/crossroad intersection, see Sections 36-1.06 and 37-5.01.

   c. Exit Ramp Terminals. Where a freeway or expressway is proposed to cross over the crossroad, locate the exit ramp terminals on the mainline no closer than 1000 ft (300 m) from the high point of a crest vertical curve on the mainline. This will ensure that no hidden ramps exist and will provide for safer operations at the exit ramp terminal.

   d. Turning Trucks. Large trucks may become unstable when executing a nonstop, left turn from a crossroad on a downgrade. The combination of a downgrade,

HARD COPIES UNCONTROLLED

sharp turning maneuvers into a ramp, and reverse superelevation may produce instability in large trucks. Therefore, the maximum grade for all crossroads associated with these conditions is desirably 2% through the ramp/crossroad terminal. For existing crossroads to remain in place, limit the downgrade to 3%. At a maximum, limit the up and downgrades to 4%.

6. Cross Sections. When designing the crossroad through the interchange, consider the following:

   a. Widths. In general, carry the approach cross section of the major facility through the interchange. See Sections 37-5.01 and 37-5.02 for typical cross sections of a crossroad through an interchange.

   b. Raised-Curb Medians. Raised-curb medians are used throughout the limits of the interchange. This facilitates the construction of separate left-turn lanes and promotes the proper use of the ramp/crossroad intersections. To determine the crossroad channelized approach in conjunction with the crossroad design speed and number of lanes on the crossroad, see the IDOT publication *Transitional Approaches to Channelized Intersections* for additional information. Chapter 36 also provides guidance on the design of channelized left-turn lanes and islands.

   c. Side Slopes. Side slopes on the crossroad through the interchange area should be 1V:4H or flatter. Chapter 34 and Part V further discuss roadway side slopes.

7. Sight Distance. Because of the additional demand placed on the driver at an interchange, the designer should consider the following sight distance elements:

   a. Stopping Sight Distance. Provide adequate stopping sight distance on both intersecting highways throughout the interchange and on all ramps. Check both the vertical and horizontal alignment to ensure that the location of piers, abutments, structures, bridge rails, vertical curves, etc., will not restrict sight distance. Chapter 32 discusses the application of horizontal sight distance. Chapter 33 discusses the application of vertical sight distance.

   b. Decision Sight Distance. Desirably, provide decision sight distance to all decision points (e.g., exit and entrance terminals). Driver expectancy should not be violated; see Chapter 31.

   c. Intersection Sight Distance. Section 36-6 discusses intersection sight distance (ISD), which is also applicable at ramp/crossroad intersections (non-merging sites). Section 37-5.01 provides additional ISD guidance that should be considered at ramp/crossroad intersections that are stop controlled.

HARD COPIES UNCONTROLLED

8. Ramp/Crossroad Intersections. When designing the ramp/crossroad intersection, consider the following:

   a. Angle of Ramp Intersection. To determine the appropriate angle for the ramp/crossroad intersection, see Section 37-5.

   b. Access Control. To determine the required length of access control along the crossroad at the interchange, see Chapter 35.

   c. Left-Turn Lanes. Select the appropriate left-turn lane lengths based on the design speed of the crossroad and/or the required storage lengths; see Section 36-3.02. For guidance on the design of left-turn lanes across or under a structure, see Section 37-5.

   d. Design Vehicle. Check the ramp/crossroad intersection with the applicable design vehicle turning template or use a computer-simulated turning template program. As discussed in Section 36-1.08, use the WB-67 (WB-20) design vehicle at all ramp/crossroad intersections.

   e. Design Users. Where present and permitted users along the crossroad, pedestrians and bicyclists should be treated as design users of the facility and given the same consideration as the design vehicle.

   f. Corner Islands. See Section 36-2.02 when designing or modifying corner islands at ramp/crossroad intersections.

9. Mainline/Crossroad Point of Intersection. Once Items 1 through 8 above have been determined, the designer must decide where the mainline alignment best intersects with the crossroad. The overall size of the interchange, crossroad gradelines, required length of access control along the crossroad, access to property at the ends of access control on the crossroad, and topography are the most influential factors in this determination. Complete this investigation before the detailed design of an interchange is initiated.

10. Structures. Chapter 39 provides the geometric design criteria for structures designed in conjunction with interchanges.

11. Trucks. Check truck merging speeds at entrance terminals. This typically is only critical where the:

   - mainline profile is on an upgrade of 3% or greater,
   - the ramp profile is on a steep upgrade, and/or
   - the mainline volume is heavy.

37-2.15 Operational/Safety Considerations

Operations and safety are important considerations in interchange design. The following summarizes several major considerations:

1. Exit Ramps. For exit ramps, consider the following:

   - Provide decision sight distance, where practical, to the freeway exit; see Chapter 31. Desirably, use the pavement surface for the height of object (i.e., 0.0 inches (0.0 mm)).
   - Ramps should depart from the mainline where there will be no vertical curvature to restrict visibility along the ramp. Avoid ramp designs that drop out of sight.
   - Avoid locating exit terminals where the mainline curves to the left.
   - Proper advance signing of exits is essential to allow necessary lane changes before the exit.
   - Provide sufficient distance to allow safe deceleration from the freeway design speed to the design speed of the first governing geometric feature on the ramp, typically a horizontal curve.

2. Entrance Ramps. Provide an acceleration distance of sufficient length to allow a vehicle to attain an appropriate speed for merging. Where entrance ramps enter the mainline on an upgrade, the acceleration distance may need to be lengthened, or an auxiliary lane may be required to allow vehicles to reach a safe speed prior to merging.

3. Driver Expectancy. Ensure that the interchange is designed to conform to the principles of driver expectation. These may include the following:

   - Avoid left-hand exit or entrance terminals. Drivers expect single-lane exit and entrance terminals to be located on the right side of the freeway.
   - Do not locate exit ramps so that it gives the appearance of a continuing mainline tangent as the mainline curves to the left.
   - Do not mix operational patterns between interchanges, lane continuity, or interchange types.
   - Provide lane balance and basic number of lanes on the freeway.
   - Provide sufficient spacing between interchanges to allow proper signing distances to decision points.

4. Fixed Objects. Because of traffic operations at interchanges, many fixed objects may be located within interchanges (e.g., signs at exit gores, bridge piers, rails). Avoid locating these objects near decision points, make them breakaway, or shield them with barriers or impact attenuators. Make any concrete footings flush with the ground line. See Chapter 38 for additional guidance on roadside safety.

5. Controlled Ramp Terminals. The designer must ensure that ramp/crossroad intersections have sufficient capacity so that the queuing traffic at the crossroad

HARD COPIES UNCONTROLLED

intersection does not backup onto the freeway. Also, sufficient access control and intersection sight distance must be maintained along the crossroad to allow the ramp intersection to work properly.

6. Wrong-Way Maneuvers. Provide channelized medians, islands, and adequate signing to minimize wrong-way possibilities. Avoid designs that may result in poor visibility, confusing ramp arrangements, or inadequate signing.

7. Weaving. Areas of vehicular weaving may create a high demand on driver skills and attentiveness. Where practical, design interchanges without weaving areas by changing the sequence of ramps, increasing the spacing between ramps, or removing the weaving areas from the highway mainline by using collector-distributor roads.

8. Pedestrians and Bicyclists. Use signing and lane markings to increase awareness of pedestrians and bicyclists. Signing, crosswalks, barriers, over and underpasses, bridge sidewalks, and other traffic control devices may be required to manage traffic movements and to control pedestrian and bicycle movements.

37-2.16 Distance Between Successive Freeway Ramp Terminals

Successive freeway ramp terminals may be placed relatively close to each other especially in urban areas. The distance between the terminals should provide for vehicular maneuvering, signing, and capacity. Figure 37-2.D provides recommended guidelines for spacing distances of various freeway ramp terminals. The criteria in Figure 37-2.D should be considered for the initial planning stages of interchange location. The final decision on the spacing between freeway ramp terminals must satisfy the level-of-service criteria. This will be determined by conducting a detailed capacity analysis using the *Highway Capacity Manual*. Where the distance between the tapers of successive entrance and exit terminals is less than 1500 ft (450 m), connect the two terminals with an auxiliary lane and provide a recovery area beyond the exit terminal as illustrated in Figure 37-6.B.

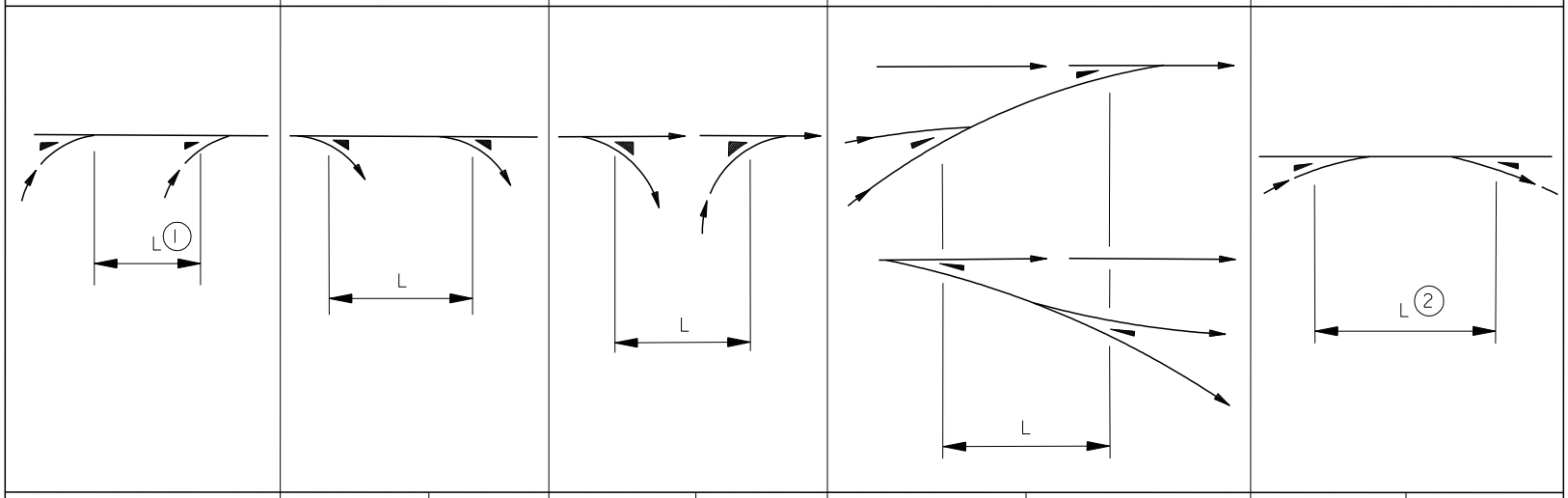

EN-EN	EX-EX		EX-EN		Directional Ramps		EN-EX (Weaving)			
Full Freeway CDR or FDR	Full Freeway	CDR or FDR	Full Freeway	CDR or FDR	System Interchange	Service Interchange	System to Service Interchange		Service to Service Interchange	
							Full Fwy.	CDR or FDR	Full Fwy.	CDR or FDR
Minimum Lengths (L) Measured Between Successive Ramp Terminals										
300 ft (100 m)	1000 ft (300 m)	800 ft (240 m)	500 ft (150 m)	400 ft (120 m)	800 ft (240 m)	600 ft (180 m)	2000 ft (600 m)	1600 ft (480 m)	1600 ft (480 m)	1000 ft (300 m)

FDR - Freeway Distributor Road CDR - Collector-Distributor Road EN - Entrance EX - Exit

Notes:

1. *Distance is measured from the end of taper (1 ft (300 mm) stub) to the gore nose and desirably should be 400 ft (120 m) or more; see Figure 37-6.K.*
2. *For cloverleaf loop ramps, this distance is determined from Figure 37-3.N and a weaving analysis.*
3. *The lengths are based on operational experience and the need for flexibility and adequate signing. They should be checked according to the procedure in the* Highway Capacity Manual. *The larger of the values is suggested for use. Also, a procedure for measuring the length of the weaving section is given in the* Highway Capacity Manual.

RAMP TERMINAL SPACING GUIDELINES

Figure 37-2.D

HARD COPIES UNCONTROLLED

37-3 INTERCHANGE TYPES AND LAYOUTS

37-3.01 General

In Illinois, there are six basic interchange types — the diamond, the cloverleaf, the partial cloverleaf, the trumpet, the directional, and the semi-directional. These interchange types, and variations within each type, permit adaptation to traffic needs, available right-of-way, terrain, and cultural features. The following sections discuss these basic interchange types and the design elements for laying out the interchange. The FHWA publication *Alternative Intersection/Interchange: Informational Report (AIIR)* discusses alternative interchange designs (e.g., diverging diamond interchange, displaced left-turn interchange). Each interchange must be designed to fit the individual site considerations. The final design may be a minor or major modification of one of the basic types or may be a combination of two or more basic types. Sections 37-2, 37-4, 37-5, and 37-6 provide the general design criteria for the individual elements of the interchange.

37-3.02 Conventional Diamond

37-3.02(a) General

The conventional diamond is the simplest and most common interchange type. Diamonds include one-way diagonal ramps in each quadrant and two intersections at the crossroad. With proper treatments at the crossroad, the diamond interchange can accommodate a wide variety of circumstances in suburban and urban areas where the crossroad operating speeds are 45 mph (70 km/hr) or less. The diamond is usually the best interchange choice where the intersecting road is not access controlled. Figures 37-3.A and 37-3.B illustrate typical diamond interchanges. Some of its advantages and disadvantages include:

Advantages

- All exits from the mainline occur before reaching the crossroad structure and entrances occur after the structure. This conforms to driver expectancy and therefore minimizes confusion.
- All traffic can enter and exit the mainline at relatively high speeds.
- At the crossroad, adequate sight distance can usually be provided, and the operational maneuvers are consistent with other intersections on the crossroad.
- They require less right-of-way than other interchange types.
- The diamond configuration easily allows modifications to provide greater ramp capacity, if needed in the future.
- Their common usage has resulted in a high level of driver familiarity.
- Typically, it is the least expensive of all interchange types.

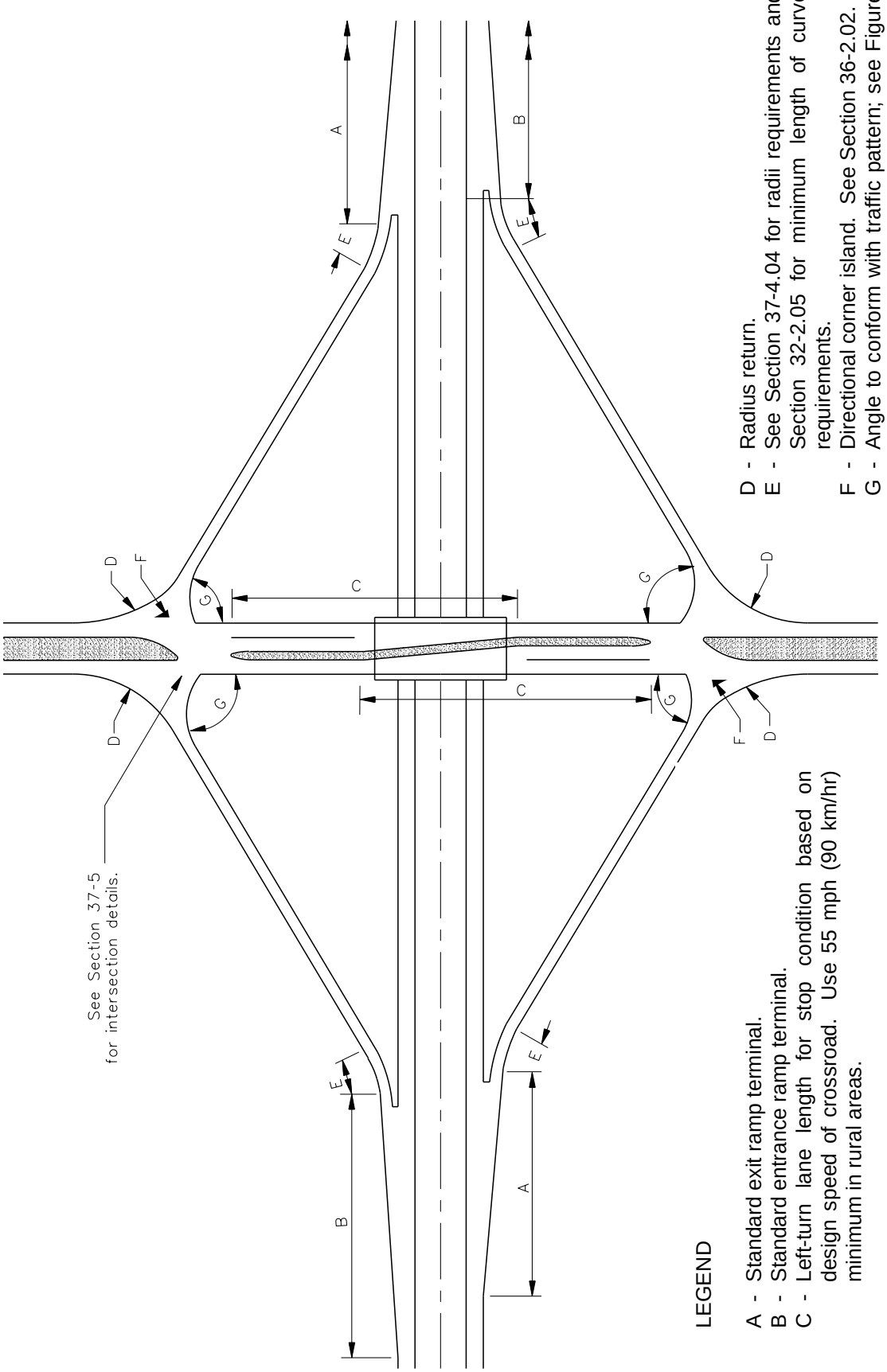

LEGEND

A - Standard exit ramp terminal.
B - Standard entrance ramp terminal.
C - Left-turn lane length for stop condition based on design speed of crossroad. Use 55 mph (90 km/hr) minimum in rural areas.
D - Radius return.
E - See Section 37-4.04 for radii requirements and Section 32-2.05 for minimum length of curve requirements.
F - Directional corner island. See Section 36-2.02.
G - Angle to conform with traffic pattern; see Figure 37-3.C.

DIAMOND INTERCHANGE LAYOUT
(60 Degree Design)

Figure 37-3.A

HARD COPIES UNCONTROLLED

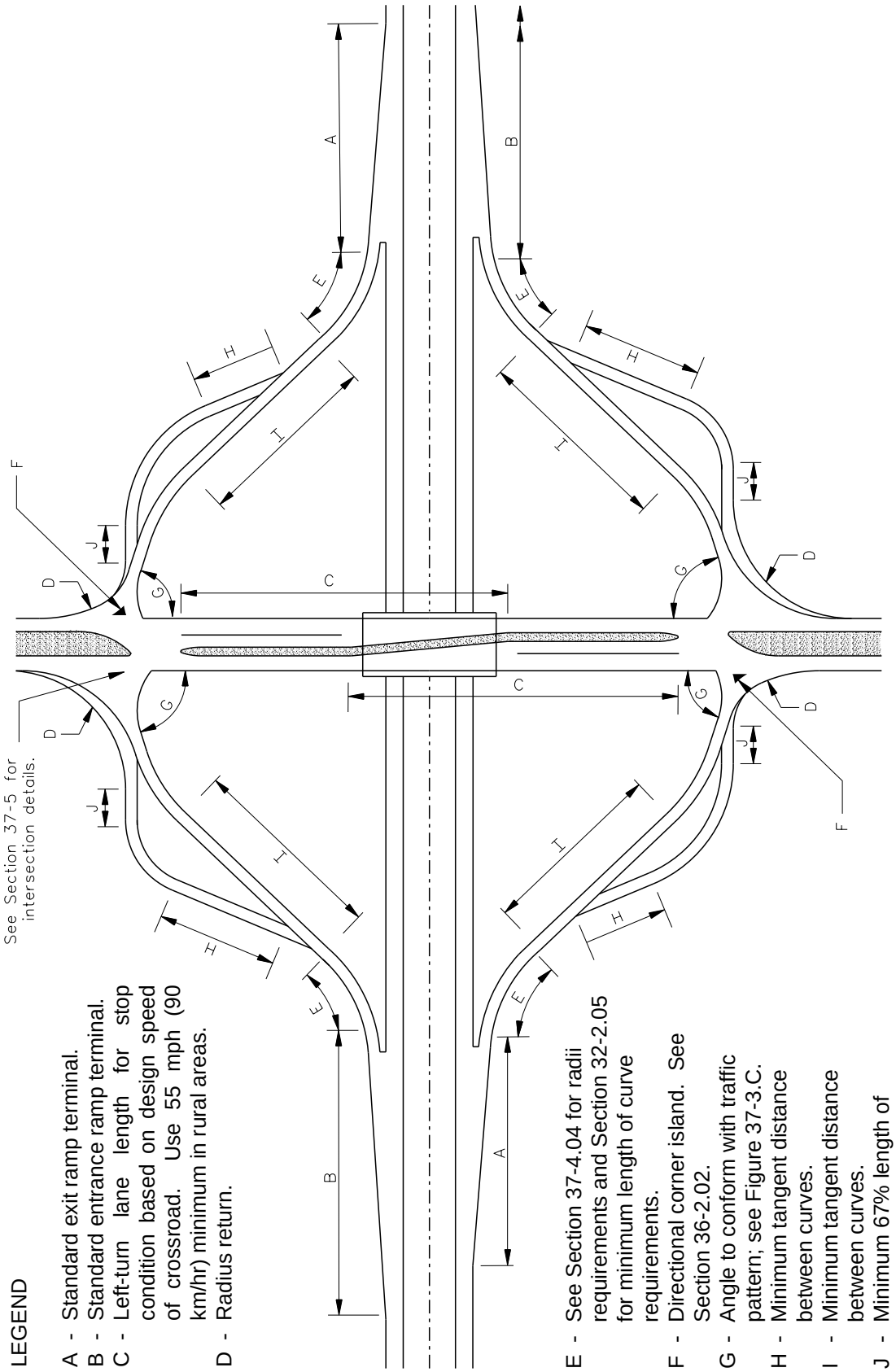

LEGEND

A - Standard exit ramp terminal.
B - Standard entrance ramp terminal.
C - Left-turn lane length for stop condition based on design speed of crossroad. Use 55 mph (90 km/hr) minimum in rural areas.
D - Radius return.
E - See Section 37-4.04 for radii requirements and Section 32-2.05 for minimum length of curve requirements.
F - Directional corner island. See Section 36-2.02.
G - Angle to conform with traffic pattern; see Figure 37-3.C.
H - Minimum tangent distance between curves.
I - Minimum tangent distance between curves.
J - Minimum 67% length of superelevation runoff. Tangent length must not overlap into radius return.

DIAMOND INTERCHANGE LAYOUT
(75 Degree 0R 90 Degree Design)

Figure 37-3.B

Disadvantages

- Traffic is subject to stop-and-go operations rather than free flow.
- In suburban and urban areas, signalization is generally required at the crossroad intersections. These signals should be interconnected for progression.
- They require right-of-way in all four quadrants of the interchange.
- A diamond has a greater potential for wrong-way entry onto the ramps than, for example, a full cloverleaf. Raised-curb channelization is used on the crossroad to minimize the likelihood of driver confusion and wrong-way maneuvers.

37-3.02(b) Left-Turn Lanes

The first step in laying out diamond interchange ramps is to determine the location of the ramp/crossroad intersections. The length of the overlapping left-turn lanes generally will determine the location of these intersections; see Figure 37-5.A. Section 36-3.02 provides the criteria for determining the length for these separate left-turn lanes. Once the lengths are determined and located away from the grade separation, set the left-turn control radii and establish the baseline control; see Figures 37-5.D through 37-5.G.

37-3.02(c) Ramp/Crossroad Intersections

Figures 37-5.D through 37-5.G illustrate typical diamond ramp/crossroad intersections. Figure 37-3.C provides guidelines for determining allowable ramp/crossroad intersection angles where the crossroad is approximately perpendicular to the freeway. The preferred ramp/crossroad intersection angle is 90 degrees, but if avoidance of agricultural property or other adjacent right-of-way is desired, other angles are permitted according to Figure 37-3.C. The ramp angles in Figure 37-3.C are based on the volume of left-turning vehicles from either the crossroad or the ramp.

Left-Turn DHV at Ramp/Crossroad Intersection	Allowable Ramp/Crossroad Intersection Angles
125 or less	60°- 90°
125 - 250	75° - 90°
250 or more	90°

Note: This figure assumes the freeway and crossroad intersect at approximately 90°.

RAMP/CROSSROAD INTERSECTION ANGLES

Figure 37-3.C

HARD COPIES UNCONTROLLED

37-3.02(d) Ramp Layout

Although the angle of ramp intersection with the crossroad is important, the complete development of ramp geometry may be influenced by a combination of other factors (e.g., conservation of agricultural land, avoiding existing development, angle of intersection of the crossroad with the freeway). Because the angle of the crossroad with the freeway is a major factor in determining the ramp alignment and length, the following design considerations are provided:

1. Freeway and Crossroad — Perpendicular. Where the crossroad is approximately perpendicular to the freeway, consider the following guidelines:

    a. Angle of Intersection. Figure 37-3.C provides the preferred ramp intersection angles with the crossroad. These angles are based on the number of left-turning vehicles on either the crossroad or the exit ramp.

    b. Number of Curves. With a 60° intersection angle, only one curve is required on the ramp; see Figure 37-3.A. For other angles of intersection, a second curve adjacent to the crossroad will generally be required. For rural ramps with a 75 degree intersection angle with the crossroad, design the ramp curve nearest to the crossroad with a minimum 30 mph (50 km/hr) design speed and, desirably, with a 40 mph (60 km/hr) design speed. In urban areas, the design speed should be at least 25 mph (40 km/hr) unless available right-of-way is highly restricted by existing development; see Figure 37-3.B.

    c. Minimum Tangent Length. The minimum tangent length between two reverse curves should be $(2/3T_1 + 2/3T_2)$. T_1 and T_2 are the individual superelevation runoff lengths for each curve. See Figure 37-4.F for the applicable runoff lengths.

    d. Curve Locations. Where two curves are designed on an exit ramp, the curve nearest the freeway ramp terminal may be located by computing the center-to-center distance of the two curves. This center-to-center distance, “L,” passes through a point of intersection with a line drawn parallel to the edge of the freeway and passing through the center of the curve located next to the freeway. This procedure is illustrated in Figure 37-3.D.

2. Freeway and Crossroad — Skewed. If the crossroad is skewed, in either direction, strict adherence to the guidelines for perpendicular intersections in Item 1 can result in unacceptable design features (e.g., excessive ramp lengths, short curve lengths, steep grades, indirect alignment). Therefore, design modifications are generally necessary. Under these conditions, give primary consideration to the ramp alignment rather than the intersection angle as determined from Figure 37-3.C. With skewed crossroads, the ramp alignment should be, in order of preference, one of the following:

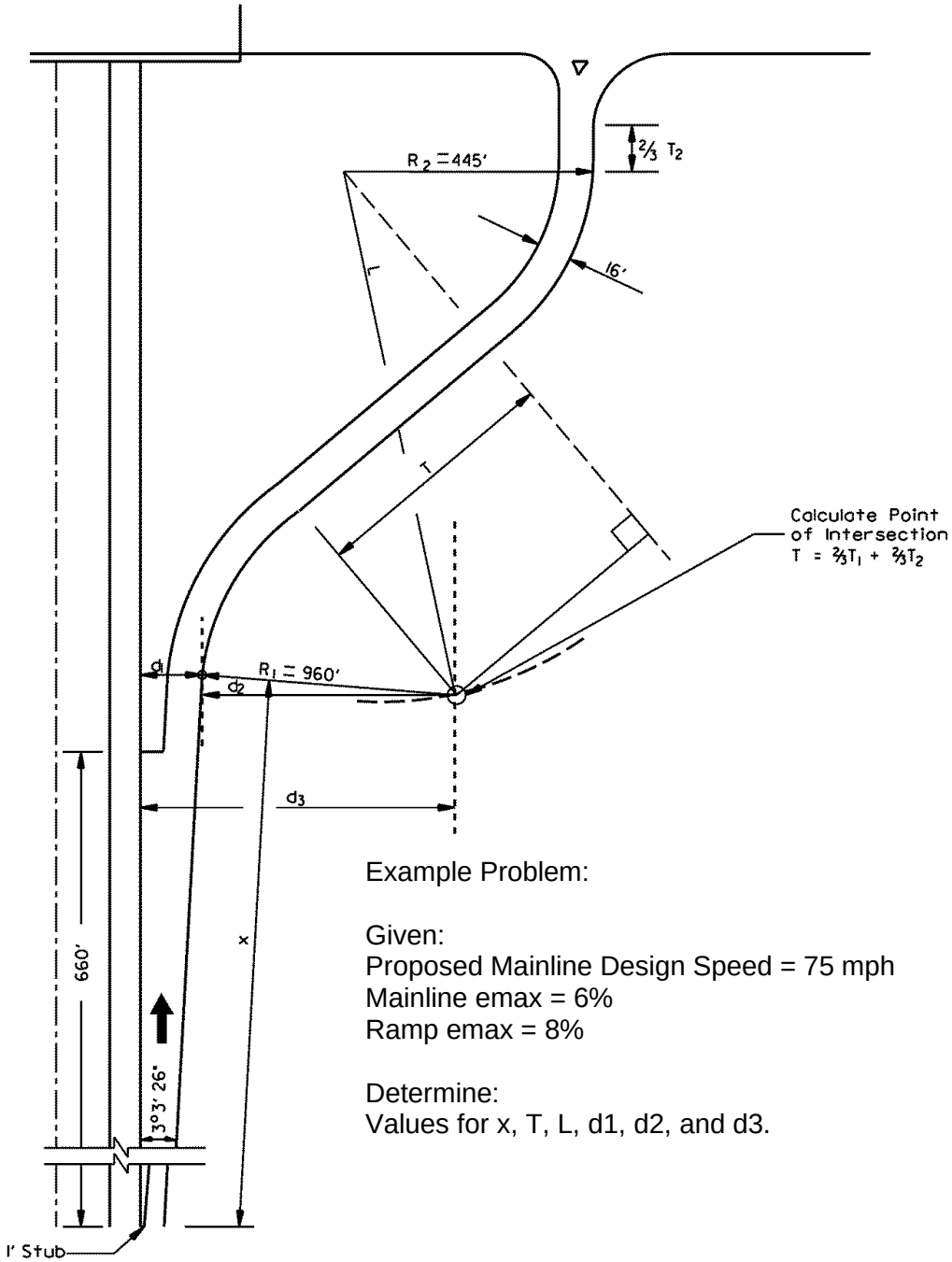

Example Problem:

Given:
Proposed Mainline Design Speed = 75 mph
Mainline emax = 6%
Ramp emax = 8%

Determine:
Values for x, T, L, d1, d2, and d3.

LOCATION OF INITIAL CURVE FOR AN EXIT RAMP
(Diamond Interchange)

Figure 37-3.D
(1 of 3)

HARD COPIES UNCONTROLLED

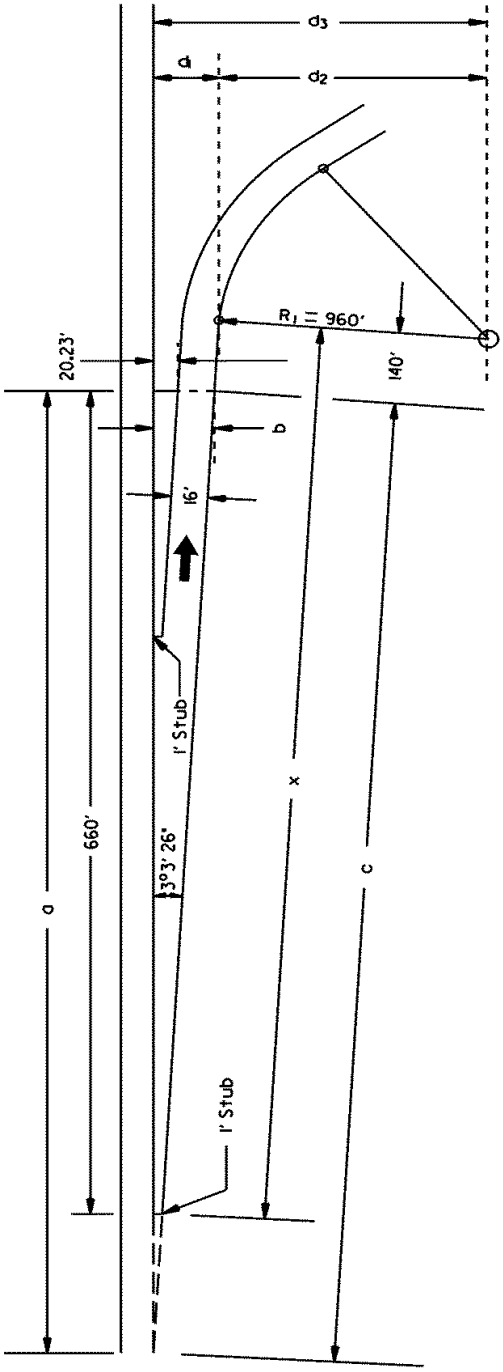

LOCATION OF INITIAL CURVE FOR AN EXIT RAMP
(Diamond Interchange)

Figure 37-3.D
(2 of 3)

Solution:

From Figure 37-4.F, determine S.E. runoff length for R_1 and R_2:

T_1 = 272 ft (55 mph)
T_2 = 220 ft (40 mph)

$T = (2/3)\ T_1 + (2/3)\ T_2$
T = (2/3) 272 + (2/3) 220
T = 328.00 ft

From the law of triangles:

$a^2 + b^2 = c^2$

$c = \sqrt{a^2 + b^2}$

$b = \sqrt{c^2 - a^2}$

Using dimensions from *Highway Standard* 406101:

a = 660 + 1/Tan 3°3'26"
a = 678.72 ft

b = 20.23 + 16/Cos 3°3'26"
b = 36.25 ft

$c = \sqrt{(678.72)^2 + (36.25))^2}$
c = 679.69 ft

Calculate x, the length along the ramp alignment from the 1 foot stub to the point of curvature of the ramp:

x = 679.69 + 140 – 16 Tan 3°3'26" – (1/Sin 3°3'26")
x = 800.09 ft

$L = \sqrt{(960 + 445)^2 + (328)^2}$
L = 1442.78 ft

d_1 = (800.09 Sin 3°3'26") + 1
d_1 = 43.67 ft

d_2 = 960 Cos 3° 3′ 26″
d_2 = 958.63 ft

$d_3 = d_1 + d_2$
d_3 = 43.67 ft + 958.63 ft
d_3 = 1002.30 ft

LOCATION OF INITIAL CURVE FOR AN EXIT RAMP
(Diamond Interchange)
Figure 37-3.D
(3 of 3)

HARD COPIES UNCONTROLLED

- a tangent ramp with a single curve adjacent to the freeway;
- reverse curves with radii connected by a tangent length greater than the minimum required for superelevation runoff lengths, see Item 1c above; or
- reverse curves with radii connected by a tangent equal to the minimum superelevation runoff needs, see Item 1c above.

In the design of the preferred alignment, the designer must also control the overall ramp length. Normally, the gore nose of a ramp should be located about 1250 ft (375 m) from the crossroad structure. If the first preference alignment cannot be developed with a gore within 1250 ft to 1400 ft (375 m to 425 m) of the structure, the second preference should be investigated and the third, if necessary, until an acceptable ramp length is achieved for both grade and directness.

37-3.03 Modified Diamond

The modified diamond interchange is a combination of the diamond interchange and partial cloverleaf. Figure 37-3.E illustrates typical schematics of a modified diamond interchange. This design type is typically used where subdivisions, extensive commercial or industrial development, lakes, ponds, or other adverse topography and/or soil conditions are located in one of the interchange quadrants, making right-of-way acquisition, design, or construction unusually expensive. Some of the advantages and disadvantages of the modified diamond include:

Advantages

- Depending upon site conditions, modified diamonds may offer the opportunity to increase weaving distances.
- It allows access where one of the quadrants presents adverse right-of-way, topography, or environmental constraints.
- It can be used where a full parclo is not desirable.

Disadvantages

- Modified diamonds may be more expensive than a conventional diamond interchange due to longer ramp lengths and wider structures.
- The loop results in a longer travel distance for the turning vehicle than for a conventional diamond, and the operating speeds on the loop ramp are generally slower.
- The exit or entrance terminal is located before or after the crossroad structure that may require additional signing to guide the motorist.

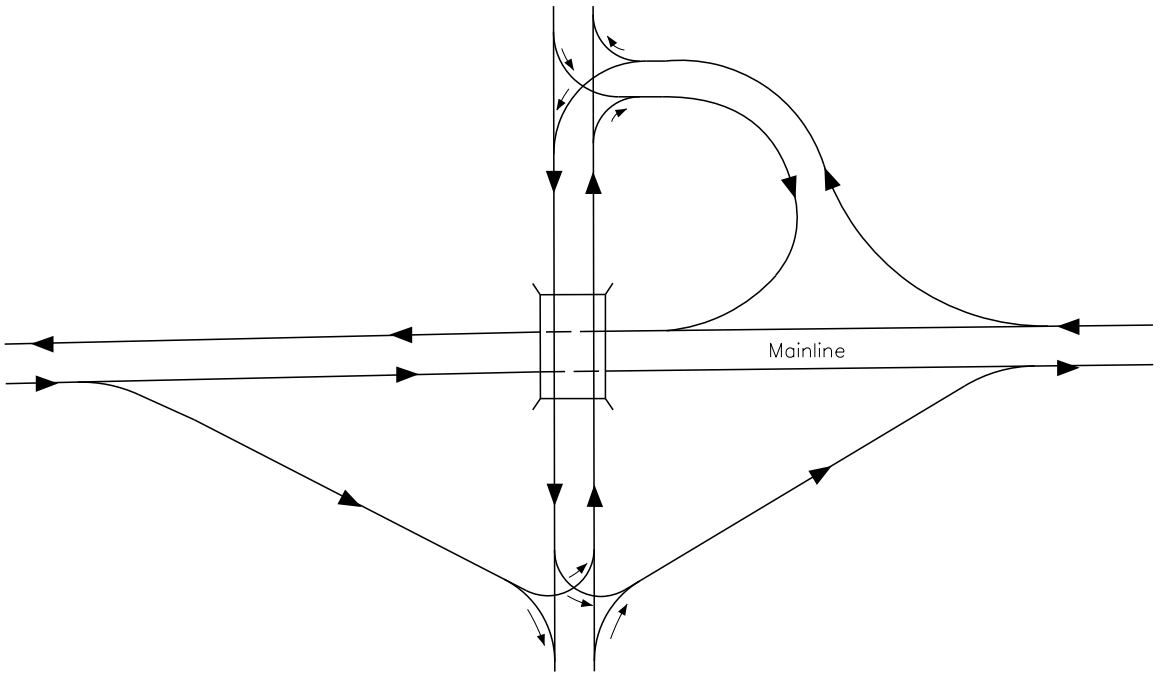

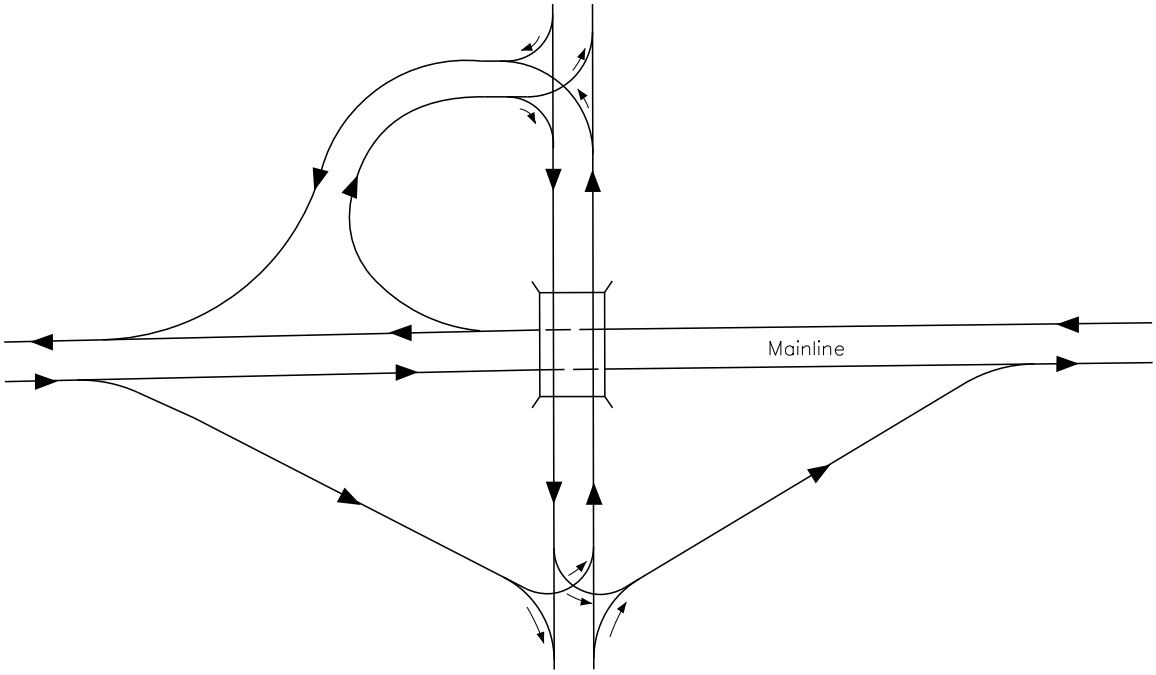

MODIFIED DIAMOND INTERCHANGE

Figure 37-3.E

HARD COPIES UNCONTROLLED

37-3.04 Compressed Diamond

37-3.04(a) General

A compressed diamond, also called a tight diamond interchange, is similar to the conventional diamond except that the ramp termini on the crossroad are located near the structure. Figure 37-3.F presents a schematic of a compressed diamond interchange without frontage roads. This design type is generally only used in urban areas where a diamond interchange is appropriate, but right-of-way or other environmental features preclude the use of the conventional diamond. Although operationally a compressed diamond is similar to a single-point diamond discussed in Section 37-3.05, they have significant differences. Some of the advantages and disadvantages of the compressed diamond include:

Advantages

- Less right-of-way is required than that for a conventional diamond.
- The open pavement area at the intersection is significantly less than that for a single point diamond.
- The grade separation structure is significantly smaller than that for a single-point diamond, retaining walls and/or embankments are less expensive, and construction costs are lower.
- The ramp/crossroads intersections operate as two typical intersections, similar to a conventional diamond and, therefore, are less confusing to drivers.
- Slip ramps for one-way frontage roads can be easily incorporated into the design.

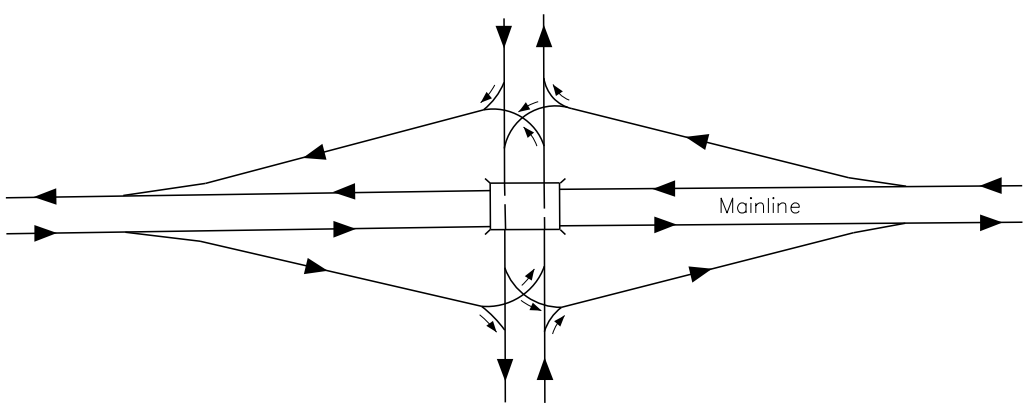

COMPRESSED DIAMOND INTERCHANGE

Figure 37-3.F

Disadvantages

- Left-turn lanes between the ramp termini usually need to be overlapped (i.e., side-by-side opposing left-turn lanes). Consequently, the cross section of the crossroad is generally wider than a conventional diamond.
- Signal timing and interconnection are necessary in order to eliminate left-turn queues from overlapping each other and causing gridlock.
- Due to the close proximity of the two intersections, the compressed diamond typically will need to operate as a six-phase overlap signal system. Consequently, longer clearance times are required.
- Length of access control on the crossroad may be more extensive than that for a conventional diamond.

37-3.04(b) Ramp/Crossroad Intersections

Section 37-5 presents the criteria for ramp/crossroad intersections, which is also applicable to compressed diamonds. However, the minimum length for left-turn lanes is based on the storage length and not on the deceleration distance. See Section 36-3.02 to determine the minimum storage length. If there is insignificant space for storage, the designer will need to consider optimizing the traffic signals.

Figure 37-3.F illustrates a schematic of a compressed diamond without frontage roads. Figure 37-5.M presents the criteria for a compressed diamond with one-way frontage roads and slip ramps. Where there are one-way frontage roads and where there is significant U-turn traffic to the opposite frontage road, the designer may want to consider using a turnaround design. Figure 37-3.G illustrates the general layout and cross section for a turnaround design. Depending upon specific site conditions, this arrangement may significantly improve traffic operations at the interchange. The major operational feature of the turnaround is to provide access for traffic on the freeway to the one-way frontage road in the opposite direction without passing through the two intersections on the crossroad. If U-turn movements are considered to be significant, prepare an origin and destination study to determine the need for a turnaround prior to the development of IDS.

Some advantages and disadvantages of the turnaround design are as follows:

Advantages

- It preserves and enhances the accessibility to property abutting one-way frontage roads.
- U-turning vehicles do not have to pass through the two intersections on the crossroad.
- The capacity of the crossroad intersections is improved.

HARD COPIES UNCONTROLLED

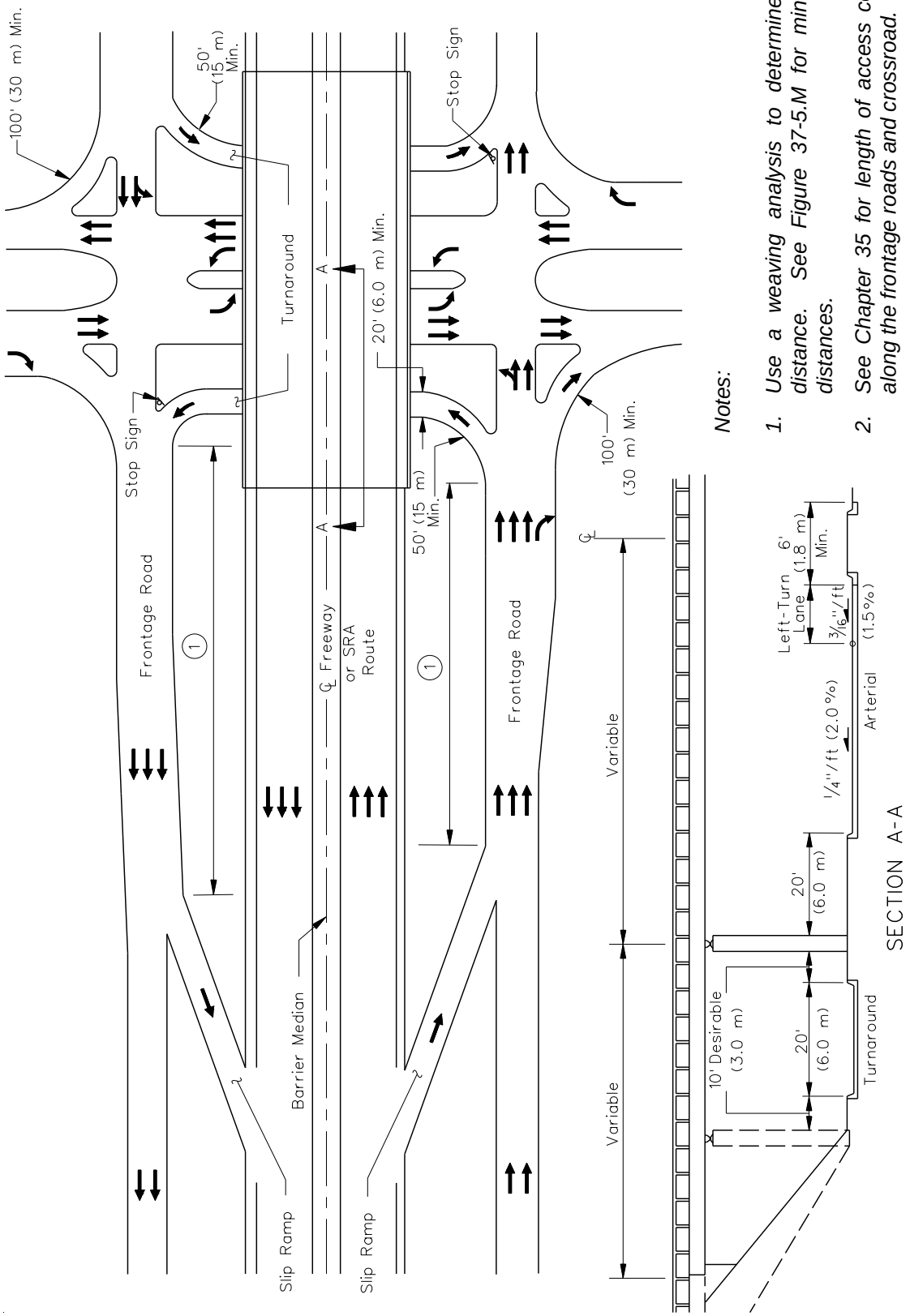

Notes:

1. *Use a weaving analysis to determine this distance. See Figure 37-5.M for minimum distances.*
2. *See Chapter 35 for length of access control along the frontage roads and crossroad.*
3. See Section 36-2.02 for corner island design.

COMPRESSED DIAMOND WITH TURNAROUND

Figure 37-3.G

Disadvantages

- It is more costly than a typical compressed diamond due to the longer structure.
- It may be confusing to non-repeat drivers because it violates driver expectancy (i.e., driving to the left of the oncoming traffic).
- Longer distances are required between the slip ramp frontage road merge point and the crossroad.

37-3.05 Single-Point Urban Diamond

37-3.05(a) General

The single-point urban diamond interchange (SPUI) offers improved traffic-carrying capabilities, safer operations, and reduced right-of-way needs under certain conditions when compared with other interchange configurations. The distinguishing feature of this interchange is the convergence of all through and left-turning movements into a single, large signalized intersection area. Figure 37-3.H illustrates a schematic of a SPUI. Some of its advantages and disadvantages include:

Advantages

- Only requires one intersection instead of two intersections at a typical diamond.
- Allows for better traffic signal progression on the crossroad.
- It can increase interchange capacity and alleviate storage problems from two closely spaced intersections on the crossroad.

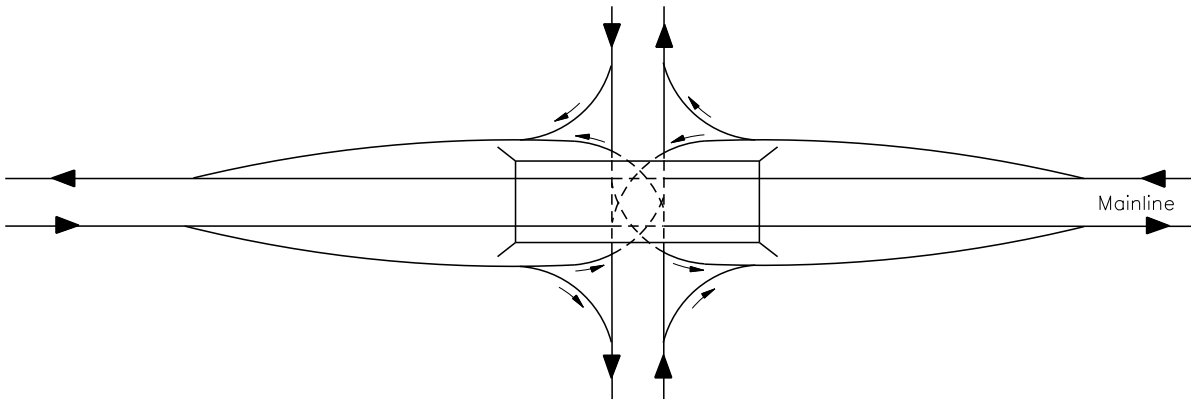

SINGLE-POINT URBAN DIAMOND INTERCHANGE

Figure 37-3.H

HARD COPIES UNCONTROLLED

- Opposing left turns operate to the left of each other so that their paths do not cross each other.
- Less right-of-way is required than any other interchange type.
- At the intersection of the ramps with the crossroad, the design typically includes flatter curves for turning radii, which allows left turns to be completed at higher speeds.

Disadvantages

- Special pavement markings and a centrally located diamond-shaped island are required to guide the left-turning drivers through the intersection.
- There is a significantly wider pavement area for pedestrians to cross and may create greater delays in traffic when compared to the conventional diamond.
- Because of wide pavement areas, it requires longer signal clearance times.
- It has a higher cost than the conventional or compressed diamond because of the need for a long, single-span structure and the need for retaining walls or reinforced earth walls along the mainline.
- In the case of the mainline over a crossroad, lighting is required under the structure.

37-3.05(b) Design Considerations

The interrelationship of the design elements is extremely important in the design of single-point diamond interchanges (SPUI). Therefore, make every effort to use the desirable values for all design features of the interchange. See NCHRP 345 *Single-Point Urban Interchange Design and Operational Analysis* for complete design details. Figures 37-3.I and 37-3.J illustrate the typical layout for a SPUI. In addition, consider the following:

1. Over versus Under. One of the first things the designer must address is whether to place the freeway or expressway over or under the crossroad. The overpass SPUI, illustrated in Figure 37-3.I, typically includes a conventional, single-span structure 220 ft (67 m) in length with a depth of 8 ft to 9 ft (2.4 m to 2.7 m). The underpass design (freeway over) typically includes two spans of approximately 65 ft (20 m) in length and a depth of 3 ft to 4 ft (1.0 m to 1.2 m). The underpass design tends to provide a more open and less restrictive feeling as the driver approaches the intersection area. For both designs, the crossroad profile should be as flat as practical. Section 44-4.02 discusses additional considerations when determining whether to place the crossroad over or under the freeway.

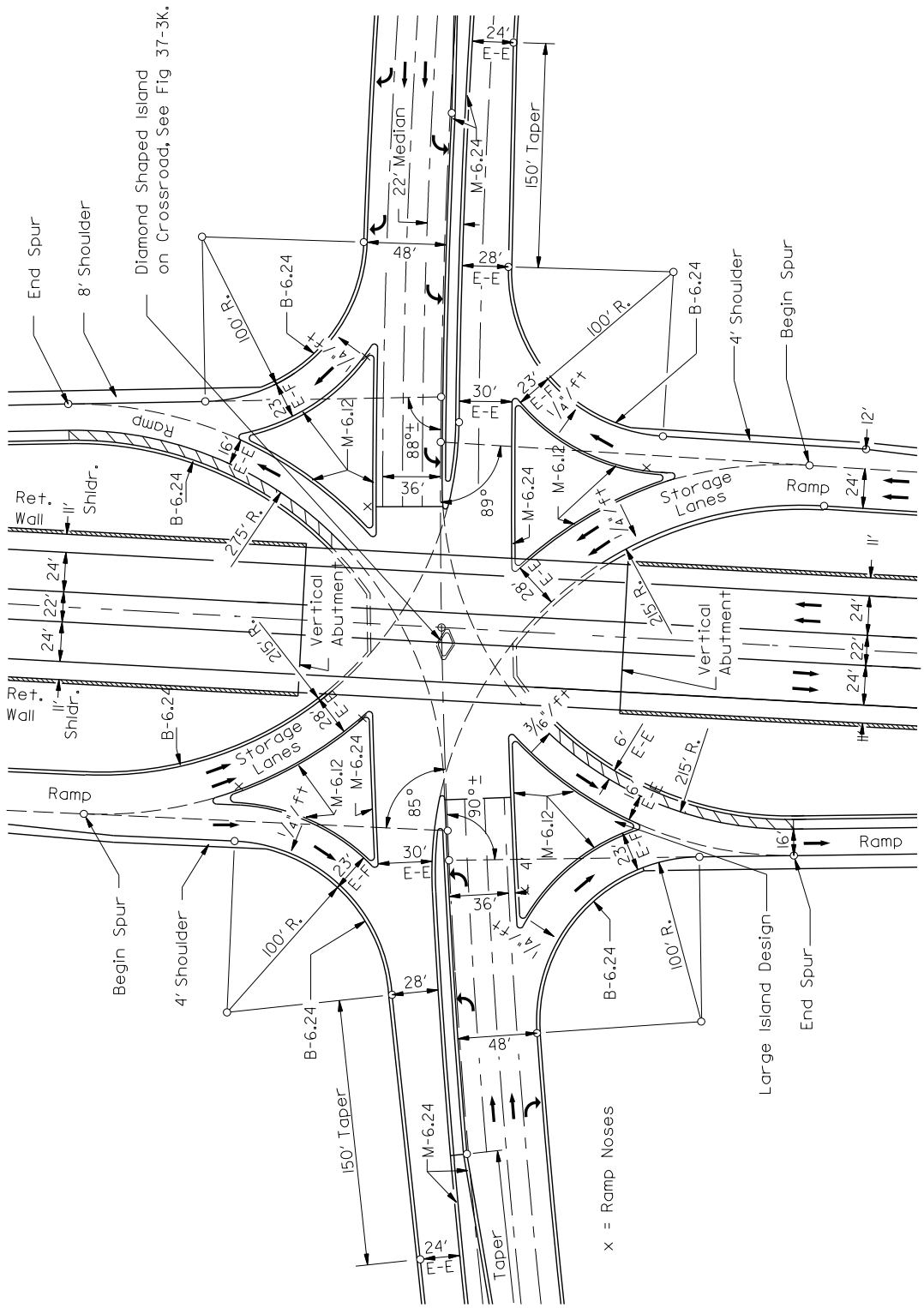

SINGLE-POINT URBAN DIAMOND INTERCHANGE
(Example of Central Intersection Details)

Figure 37-3.I

HARD COPIES UNCONTROLLED

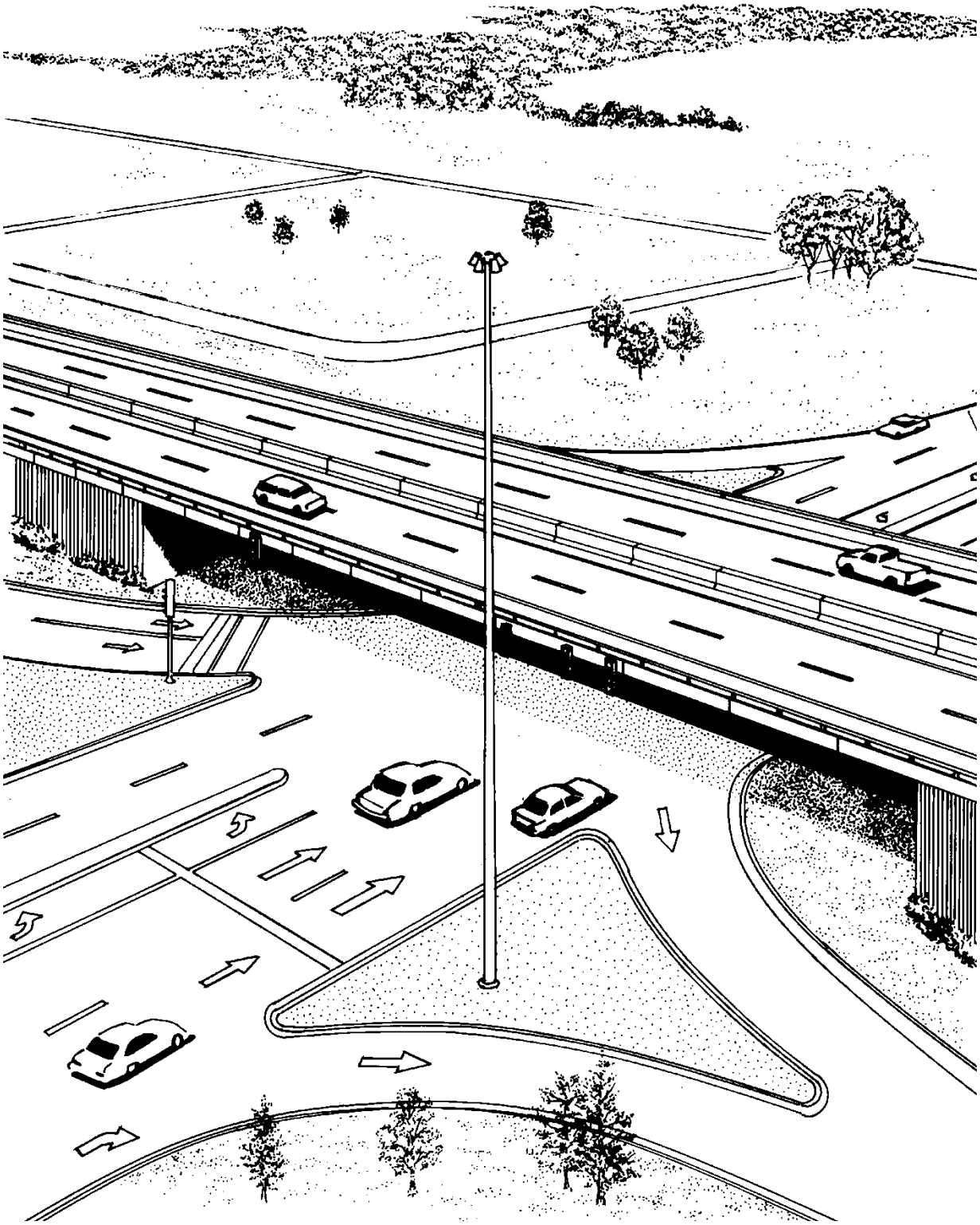

PERSPECTIVE VIEW OF SINGLE-POINT URBAN DIAMOND INTERCHANGE

Figure 37-3.J

2. Sight Distance. Sight distance along the exit ramp to the crossroad intersection is especially critical with the SPUI because the decision point to turn left or right generally will occur sooner at a SPUI than at other diamond type interchanges. The point of initial driver perception of the large triangular intersection island and the point for the left- or right-turn decision should occur at or just beyond the gore nose of the off ramp. At a minimum, provide the stopping sight distance as discussed in Section 31-3.01 and, desirably, decision sight distance wherever practical (Section 31-3.02). The designer must also check the horizontal sight distance to ensure that the structure abutments or parapet walls do not block the sight distance.

3. Intersection Sight Distance. Provide adequate intersection sight distance as discussed in Section 36-6. The designer must check both the vertical and horizontal planes to ensure that adequate intersection sight distance is available. The profile of the crossroad should be flat to allow motorists to see the entire crossroad surface and all ramps in one view.

4. Design Speed. Desirably, the design speed for the turns should be 30 mph to 40 mph (50 km/hr to 60 km/hr). In highly restricted ROW areas, the left-turning roadway from the exit ramp onto the crossroad may be designed with a 25 mph (40 km/hr) design speed.

5. Horizontal Alignment. One benefit of the SPUI is it provides high-speed, left-turning roadways in comparison to the compressed diamond interchange design. Design the left-turning roadways with 2% superelevation and radii between 200 ft and 400 ft (60 m and 120 m). See Figure 48-5.B to determine radii for other design speeds.

6. Number of Lanes. A capacity analysis is required to determine the number of turn lanes for the overall intersection design. At a minimum, provide sufficient space to allow two through lanes for each direction on the crossroad, one left-turn lane on the crossroad, dual-turn lanes on the exit ramp for left-turning movements, and one right-turn lane from the exit ramp onto the crossroad.

7. Intersection Angle. The intersection angle should be approximately 90 degrees.

8. Median Design. Crossroad medians should be in the range of 18 ft to 30 ft (5.5 m to 9.5 m) wide and with sufficient distance provided for left-turn storage in the median.

9. Central Island. Figure 37-3.K illustrates the central island that should be used on the crossroad.

10. Offset Turning Movements. To allow ease of movements for left-turns, the separation between opposing left-turning vehicles on the crossroad should be at least 10 ft (3.0 m).

11. Right-Turn Lanes. Ensure the right-turn lanes on the exit ramps are of sufficient length to allow right-turning vehicles to bypass the queue of left-turning vehicles on the ramp.

HARD COPIES UNCONTROLLED

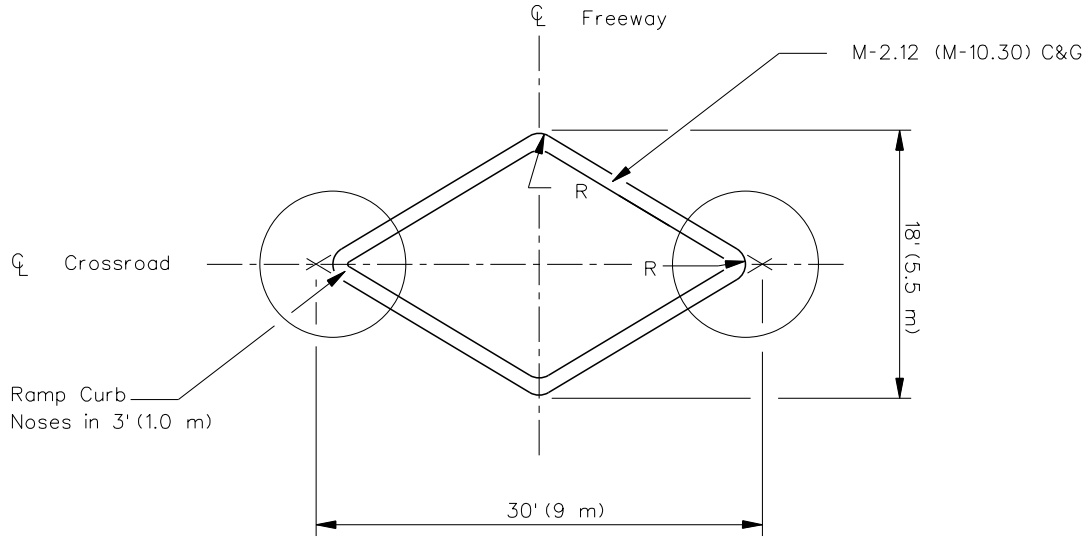

Note: R = 3 ft (1.0 m) to edge of pavement.

DIAMOND ISLAND ON CROSSROAD
(Single-Point Urban Diamond Interchange)

Figure 37-3.K

12. Traffic Control Devices. To eliminate confusion at the SPUI, proper exit ramp guide signing, pavement markings, and lane-use signing must be included to provide the necessary positive guidance through the intersection. Contact the Bureau of Operations for the applicable signing and pavement marking criteria.

13. Traffic Signal Placement. When determining signal locations, consider the following:

- Due to possible lane confusion, mount signal heads directly over the travel lanes.
- For overpass SPUI's, mount vertical signal heads outside the structure; see Figure 37-3.J.
- The visibility of the signal heads controlling the exit-ramp left-turning movements is critical. An additional signal for advance notice may be required within the large triangular island.
- A "pull-through" signal on the opposite island may be required where travel distances through the intersection are relatively long.
- Contact the Bureau of Operations for the design of all signal installations.

37-3.06 Full Cloverleafs

37-3.06(a) General

Cloverleaf interchanges are used at four-leg intersections and employ loop ramps to accommodate left-turn movements. Full cloverleaf interchanges are those with loops in all four quadrants; all others are partial cloverleafs and are discussed in Section 37-3.07.

Where two access-controlled highways intersect, a full cloverleaf is the minimum type of interchange design that will suffice. In addition, they also may be used at the intersection of other multilane arterials to accommodate large volumes of traffic.

The operation of a cloverleaf with high weaving volumes is greatly improved through the addition of collector-distributor (C-D) roadways; see Section 37-4.02. The C-D roadways may be advantageous in suburban areas because of the need for smaller loops. This may reduce the amount of right-of-way acquisition necessary for the development of the interchange. Although right-of-way requirements may be reduced, overall costs usually increase due to longer and wider structures and additional pavement costs.

Figure 37-3.L provides typical examples of full cloverleafs with and without C-D roads.

Some of the advantages and disadvantages of full cloverleafs include:

Advantages

- Full cloverleafs eliminate all vehicular stops through the use of free-flow terminals and they provide continuous free-flow operation on both intersecting highways.
- Full cloverleafs eliminate all at-grade intersections, eliminate left turns across traffic and, therefore, eliminate the need for traffic signals.

Disadvantages

- Because of the geometric design of loops, full cloverleafs require large amounts of right-of-way.
- They are typically more expensive than diamond interchanges due to considerably more lengths of ramps, wider structures, and the desirability of providing C-D roads.
- The loops in cloverleafs result in a greater travel distance for left-turning vehicles than do diamonds and the speeds on the ramps are generally slower.
- Exit and entrance terminals are located before and after the crossroad structure, which require additional signing to guide motorists.
- Weaving sections between loop ramps must be made long enough to provide for satisfactory traffic operations.
- Where the crossroad is an expressway or other multilane highway, considerable length of access control distance is needed along the crossroad to the first point of access.

HARD COPIES UNCONTROLLED

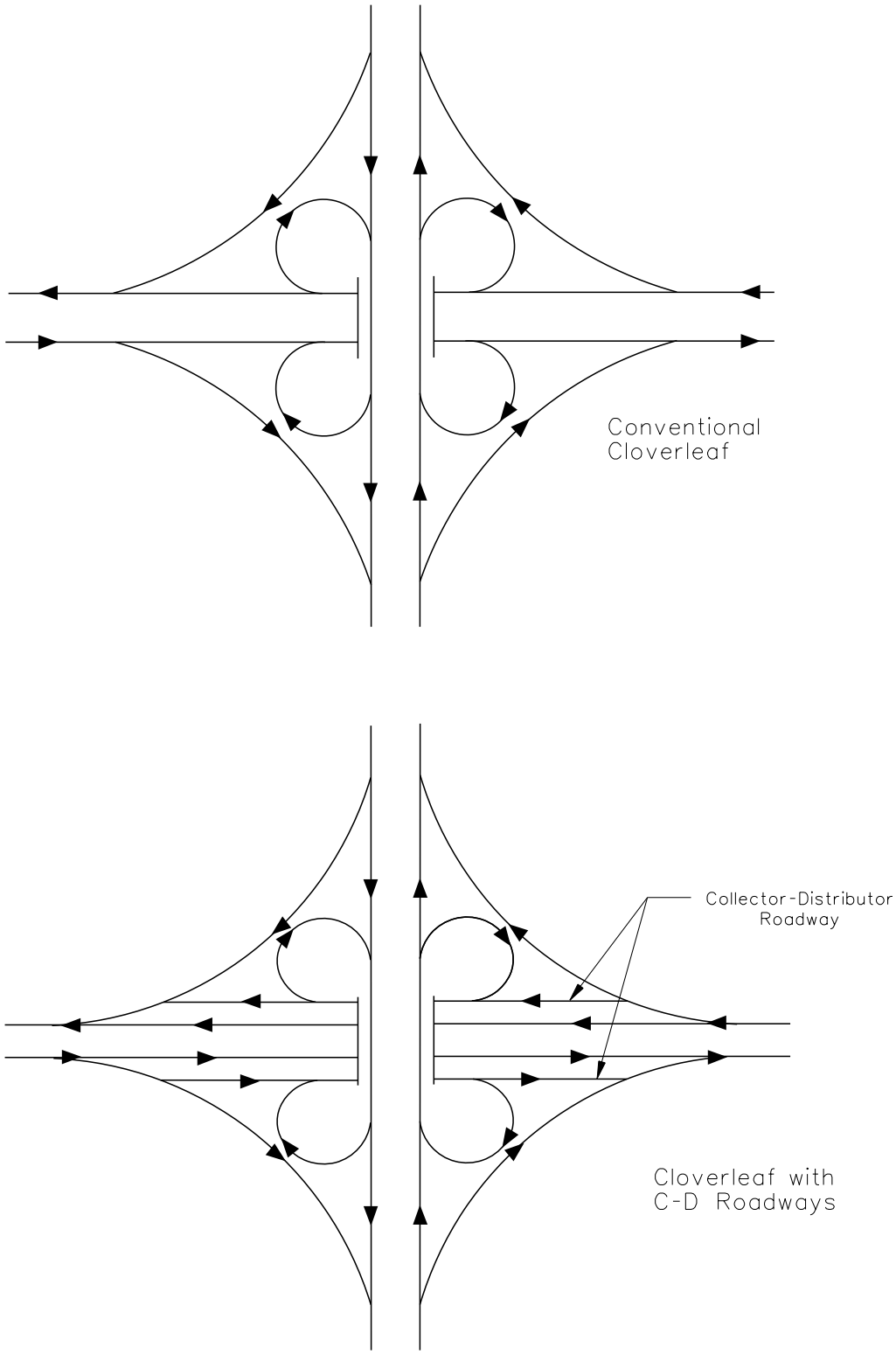

CLOVERLEAF INTERCHANGES

Figure 37-3.L

37-3.06(b) Design Considerations

Figure 37-3.M illustrates the design and layout of a typical cloverleaf interchange. In developing the cloverleaf interchange, consider the following steps:

1. Exit Gore. The first step is to locate the physical nose of the exit gore of the weaving section a minimum of three seconds of travel time at the design speed beyond the structure on each of the four interchange legs; see Figures 37-3.N.

2. Weaving Section. The second step is to determine the minimum lengths required for the weaving sections. The following will apply:

   a. Length. Figure 37-3.N illustrates various weaving lengths based on the design speed of the highway and ramp curvature of the preceding entrance ramp and the following exit ramp. The length of the weaving section also must be determined using the *Highway Capacity Manual* (HCM) and the appropriate level of service; see Item 2b below. The minimum weaving section length will be based on the greater value from the HCM or Figure 37-3.N.

   b. Capacity. At a minimum, the level of service of the weaving sections may be one level lower than the adjacent freeway. Desirably, the level of service should be the same as the adjacent mainline. When the total volume on the two successive ramps reaches approximately 1000 vph, interference increases rapidly with a resulting reduction of the through traffic speed. At these weaving volume levels, consider using a collector-distributor road. Section 37-4.02 discusses the use and design of collector-distributor roadways. Expected design capacities for single-lane loops range from 800 to 1200 vph. The higher figures are generally only achievable where the design speed is 30 mph (50 km/hr) or higher and few trucks use the loop.

   c. Superelevation. Figure 37-3.N provides the superelevation criteria for a weaving section adjacent to the tangent mainline. The cross slope of the auxiliary lane between control point(s) c should not be flatter than 1/4″/ft (2%) draining toward the right edge. For mainline alignments curving to the right, control points a, b, and e are maintained as shown in Figure 37-3.N. The cross slope of the auxiliary lane between the two points labeled c should be congruent with the cross slope of the traveled way, but not greater than 5%. For alignments curving to the left, control points a and e are maintained according to Figure 37-3.N. The superelevation rate at control point b is 6%. Where the mainline is curving to the left, the crossover crown between the two points labeled c should not exceed 5%. In all cases where weaving sections are located on a curved horizontal alignment, engineering judgment will be required where the above criteria cannot be maintained.

HARD COPIES UNCONTROLLED

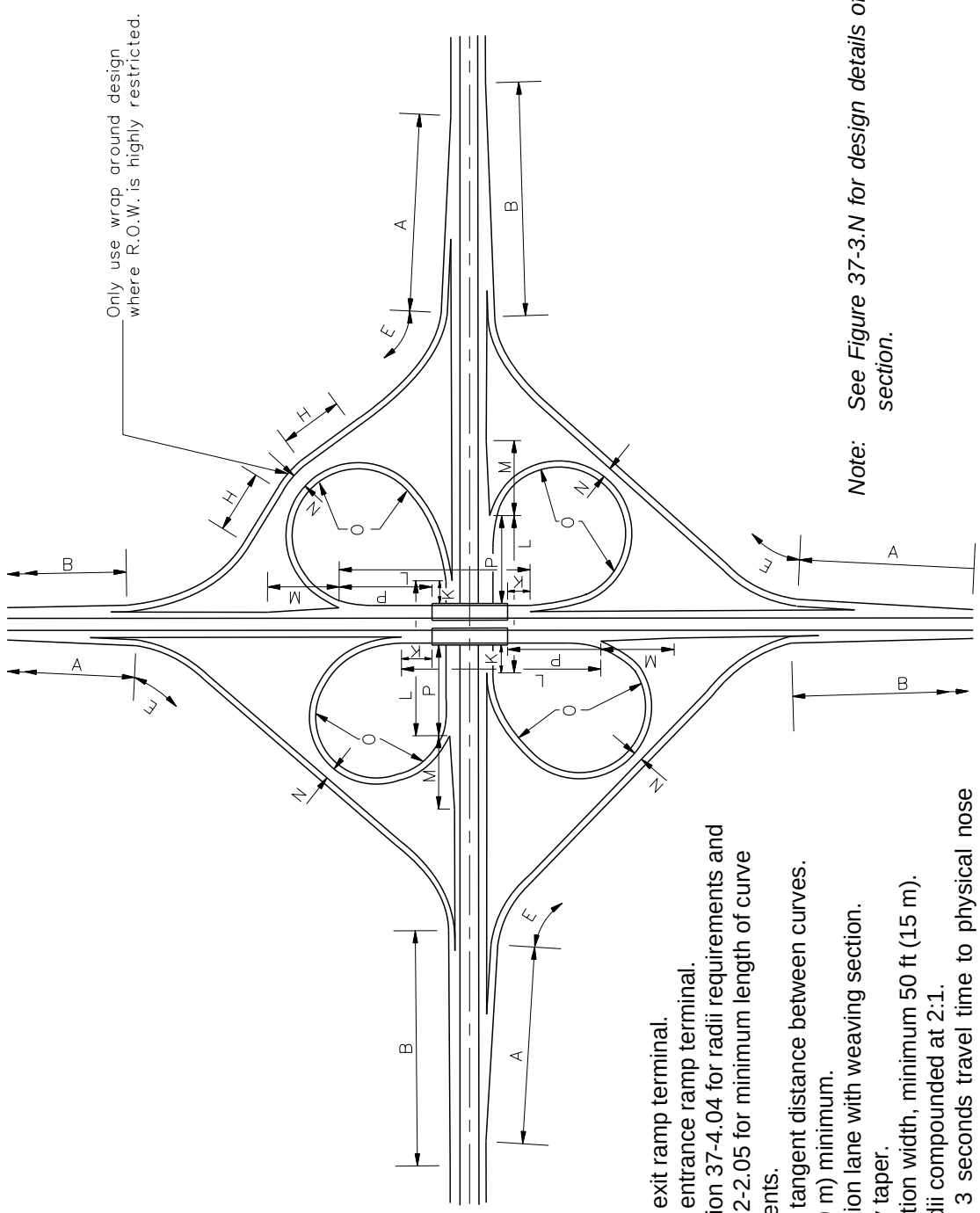

Note: See Figure 37-3.N for design details of weaving section.

LEGEND

A - Standard exit ramp terminal.
B - Standard entrance ramp terminal.
E - See Section 37-4.04 for radii requirements and Section 32-2.05 for minimum length of curve requirements.
H - Minimum tangent distance between curves.
K - 100 ft (30 m) minimum.
L - Acceleration lane with weaving section.
M - Recovery taper.
N - Ditch section width, minimum 50 ft (15 m).
O - Ramp radii compounded at 2:1.
P - Minimum 3 seconds travel time to physical nose of exit gore.

CLOVERLEAV INTERCHANGE LAYOUT

Figure 37-3.M

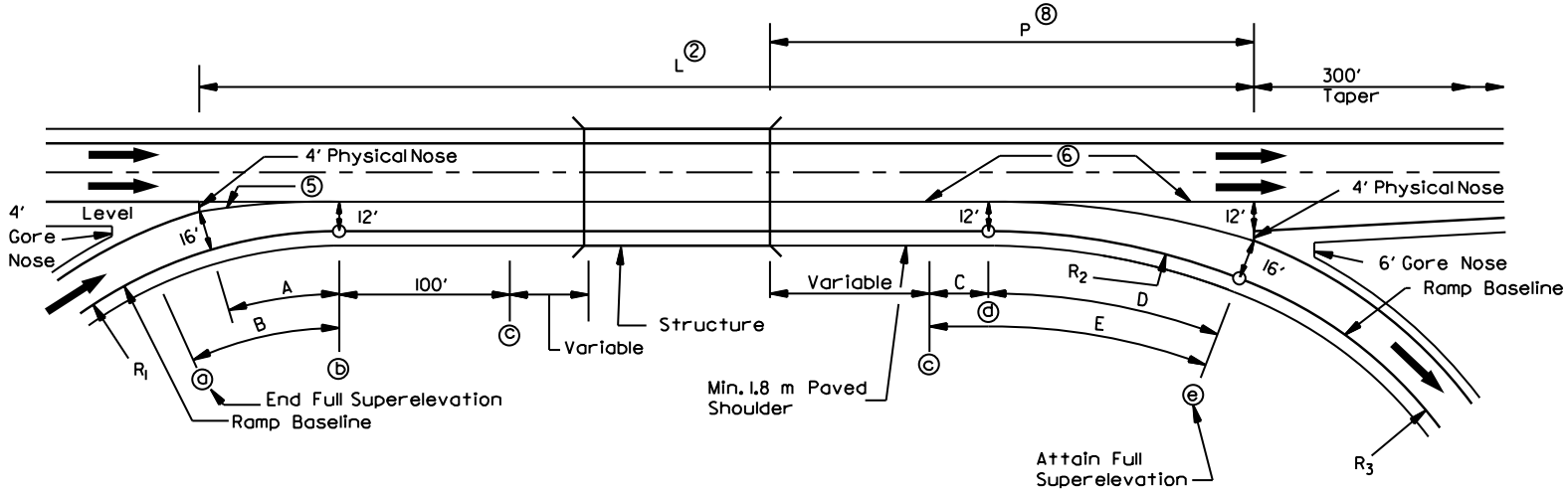

Mainline Des Spd (mph)	A (ft)	B (ft)	C (ft)	D (ft)	E (ft)	L (ft)	P (ft)	R_1 (ft)	R_2 (ft)	R_3 (ft)
75	87	100	80	160	240	650	330	758 (50 mph)	960 (55 mph)	578 (45 mph)
						750				444⑦ (40 mph)
70	87	100	75	150	225	650	310	587 (45 mph)	758 (50 mph)	444 (40 mph)
						750				314⑦ (35 mph)
60	87	100	65	130	195	650	265	444 (40 mph)	587 (45 mph)	314 (35 mph)
						750				214⑦ (30 mph)
50	75	90	45	90	135	550	220	314 (35 mph)	444 (40 mph)	214 (30 mph)
						650				134⑦ (25 mph)
40③	64	85	30	60	90	550	180	214 (30 mph)	314 (35 mph)	134 (25 mph)

Elevation of Ramp Edges with Respect to Mainline Edge of Traveled Way

Elev.	Right	Left	S.E.
ⓐ	- 1.28′	–	(8 %)
ⓑ	- 0.72′	–	(6 %)
ⓒ	- 0.24′	–	(2 %)
ⓓ	- 0.48′	–	(4 %)
ⓔ	- 1.52′	- 0.24′	(8 %)

Notes:

1. *For weaving sections on curved alignments, see Section 37-3.06(b).*
2. *L must be analyzed for weaving and increased if necessary. The weaving limits, as defined in the Highway Capacity Manual, differ from the limits shown as "L" above.*
3. *The design speed of C-D roadways must be 40 mph minimum to 50 mph maximum.*
4. *Superelevation transitions should not be used on structures.*
5. *Ramp narrowing should be effected throughout the limits of "A."*
6. *The maximum algebraic difference in slopes at the crossover crown lines should not exceed 5%.*
7. *Radii are only used with restrictive right-of-way. Increased weave length "L" provides longer deceleration distance to accommodate the lower design speed of R_3.*
8. *"P" equals 3-seconds of travel distance at the design speed of the mainline.*
9. *Refer to Section 37-4.04 for special conditions.*

CLOVERLEAF INTERCHANGE
(Weaving Section) (US Customary)

Figure 37-3.N

HARD COPIES UNCONTROLLED

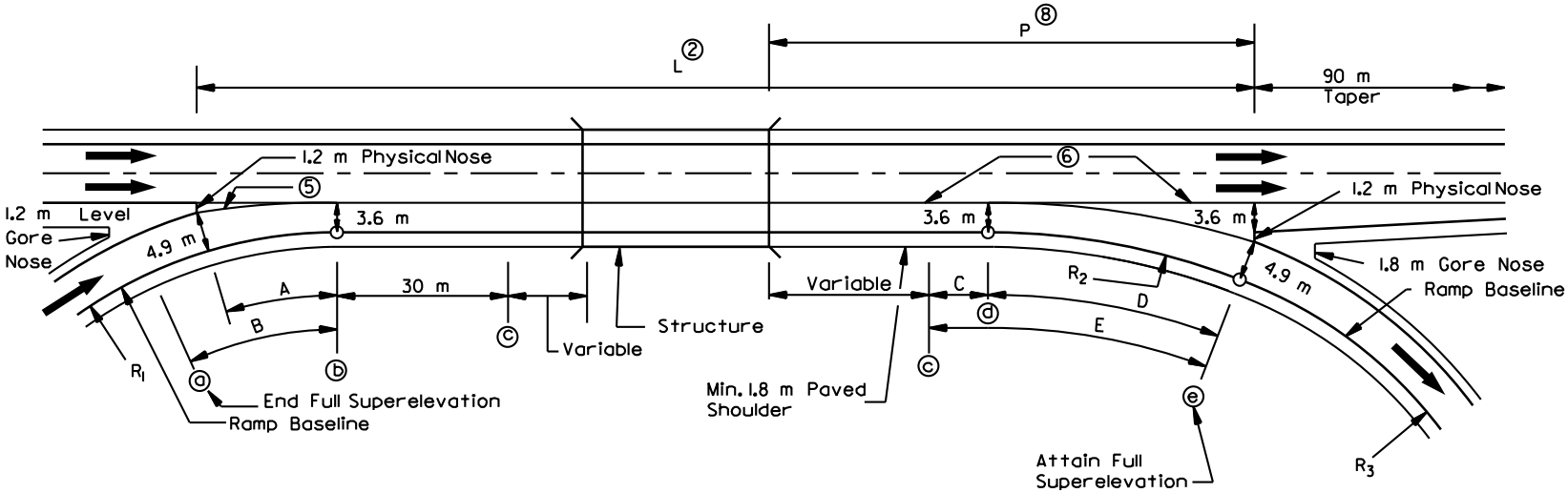

Mainline Design Speed (km/h)	A (m)	B (m)	C (m)	D (m)	E (m)	L (m)	P (m)	R_1 (m)	R_2 (m)	R_3 (m)
120	27	30	24	48	72	200	100	229 (80 km/h)	304 (90 km/h)	168 (70 km/h)
						230				140 (65 km/h)⑦
110	27	30	23	46	69	200	92	170 (70 km/h)	229 (80 km/h)	140 (65 km/h)
						230				95 (55 km/h)⑦
100	27	30	20	40	60	200	84	140 (65 km/h)	168 (70 km/h)	95 (55 km/h)
						230				73 (50 km/h)⑦
80	23	28	14	28	42	170	67	95 (55 km/h)	140 (65 km/h)	73 (50 km/h)
						200				41 (40 km/h)⑦
60③	20	26	9	18	27	170	50	73 (50 km/h)	95 (55 km/h)	41 (40 km/h)

Elevation of Ramp Edges with Respect to Mainline Edge of Traveled Way

Elev.	Right	Left	S.E.
ⓐ	- 392 mm	–	(8 %)
ⓑ	- 216 mm	–	(6 %)
ⓒ	- 72 mm	–	(2 %)
ⓓ	- 144 mm	–	(4 %)
ⓔ	- 464 mm	- 72 mm	(8 %)

Notes:

1. *For weaving sections on curved alignments, see Section 37-3.06(b).*
2. *L must be analyzed for weaving and increased if necessary. The weaving limits, as defined in the Highway Capacity Manual, differ from the limits shown as "L" above.*
3. *The design speed of C-D roadways must be 40 mph minimum to 50 mph maximum.*
4. *Superelevation transitions should not be used on structures.*
5. *Ramp narrowing should be effected throughout the limits of "A."*
6. *The maximum algebraic difference in slopes at the crossover crown lines should not exceed 5%.*
7. *Radii are only used with restrictive right-of-way. Increased weave length "L" provides longer deceleration distance to accommodate the lower design speed of R_3.*
8. *"P" equals 3-seconds of travel distance at the design speed of the mainline.*
9. *Refer to Section 37-4.04 for special conditions.*

CLOVERLEAF INTERCHANGE
(Weaving Section) (Metric)

Figure 37-3.N

3. Entrance Gore. The location of the entrance gore is determined by adding the minimum weaving length to the exit gore nose location determined in Step 1. At a minimum, place the entrance gore 100 ft (30 m) before the structure and, desirably, 200 ft (60 m) before the structure; see Figure 37-3.N.

4. Inner Loops. Once the physical noses of the exit and entrance gores have been determined, the horizontal alignment between the corresponding exit and entrance gores must be determined. Circular curve loop ramps are the most desirable geometrically because speeds and travel paths tend to be more uniform. However, this is often impractical and compound curvature is generally required. The initial and final arcs of the loops may preclude using the specified radii for the design speed of the respective highways and length of the weaving sections. A third intermediate arc is then compounded with initial and final arcs. If necessary, in obtuse quadrants, two arcs may be compounded between the initial and final curves. If the intermediate arc cannot be compounded with the minimum arc lengths provided in Section 37-4.07, one or both of the adjacent weaving sections containing the loop terminals must be adjusted and the process repeated.

5. Outer Connections. Once a satisfactory inner loop design has been developed, the designer must select the appropriate outer connection design. Desirably, this will be a tangent section connected by radii at the exit and entrance terminals. In place of the tangent section, compound curves having a radius greater than the radius preceding the exit terminal may be used. In urbanized areas where right-of-way may be restricted, a "wrap around" design may be used. In this situation, the central curve of the outer connector is normally made concentric to the arc at the center of the inner loop and the selected radius should provide a minimum design speed of 40 mph (60 km/hr). Set the outer connector to provide a common drainage section between the inner loop and the outer connection. Figure 37-3.O illustrates a typical layout with a wrap-around design.

37-3.07 Partial Cloverleafs

37-3.07(a) General

Partial cloverleaf (parclo) interchanges are those with loops in one, two, or three quadrants. Several of the disadvantages listed for full cloverleafs also apply to partial cloverleafs (e.g., geometric restriction of loops). However, some specific advantages of partial cloverleafs include:

- Partial cloverleafs provide access where one or more quadrants present adverse right-of-way and/or topographic problems that preclude a typical diamond interchange.
- Partial cloverleafs may accommodate heavy left-turn traffic by means of a loop and thereby improve capacity, operations, and safety.
- Depending upon site conditions, partial cloverleafs may offer the opportunity to increase weaving distances.

HARD COPIES UNCONTROLLED

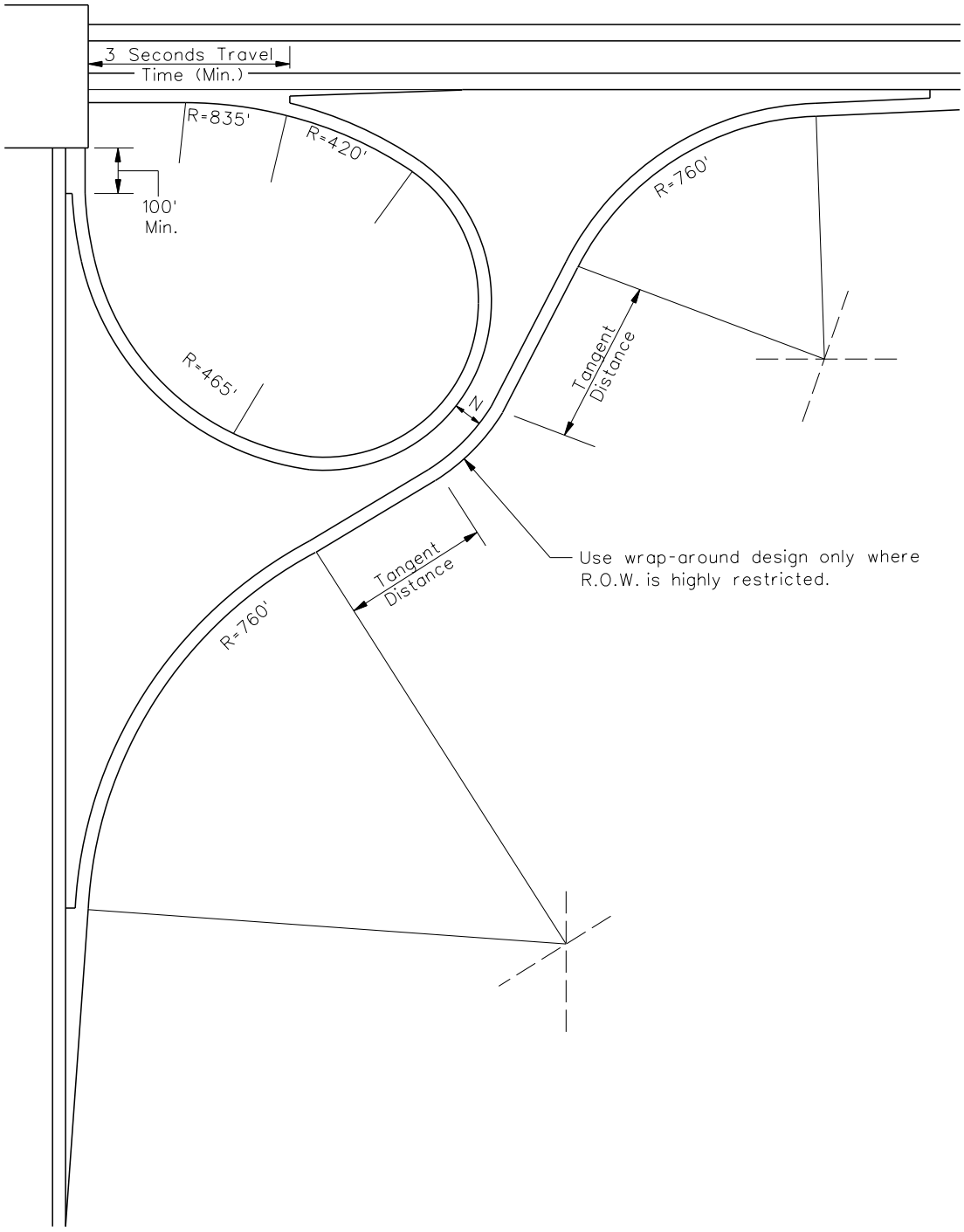

Note: Where the two ramps parallel each other, the elevations of the left edge of the outer ramp should approximately match the elevation of the inner loop ramp.

EXAMPLE OF CLOVERLEAF QUADRANT DESIGN
(Wrap-Around Outer Ramp)

Figure 37-3.O

Partial cloverleaf designs can be segregated into the two-quadrant and four-quadrant partial cloverleaf. These are further explained as follows:

1. Two-Quadrant Partial Cloverleaf Interchanges. The two-quadrant partial cloverleaf interchange is normally used at those locations where cultural or natural features restrict the development of the diamond interchange. The two-quadrant parclo interchanges Type A (Figure 37-3.P) and Type B (Figure 37-3.Q) are used where right-of-way and/or construction is precluded in opposite quadrants of the interchange. The two-quadrant parclo interchange Type C (Figure 37-3.R) is used at intersections where additional structures or extensive relocation of the crossroad would be required to develop the diamond interchange (e.g., adjacent to rivers, railroads).

   The operations of the two-quadrant parclo interchanges can be further defined as follows:

   a. Type A. Both the exit and entrance terminals are located in advance of the structure and two channelized “T” intersections are formed on the crossroad. This arrangement reduces the probability of wrong-way movements. However, all turning movements from the crossroad must undergo a “reverse” operation; i.e., drivers traveling to the right must turn left and those traveling to the left must turn right.

   b. Type B. Because the “T” intersections allow normal operations for turning movements from the crossroad, the probability of wrong-way movements are greatly reduced. The exit terminals are located beyond the structure and, due to the lower design speed on the loop ramp, drivers tend to decelerate more on the mainline through lanes in advance of the exit.

   c. Type C. No uniform pattern of operation is realized because traffic on the freeway exits in advance of the structure in one direction and beyond the structure in the other. Movements to the right or left from the crossroad are made by turning to the right for one direction and by turning left for the opposite direction. Consequently, channelization of the crossroad, with separate left-turn lanes is essential for proper operation.

2. Four-Quadrant Partial Cloverleaf Interchange. Figures 37-3.S and 37-3.T illustrate the Type A and Type B four-quadrant parclo interchanges, respectively. The four-quadrant parclo interchange is used to provide for higher traffic volumes than the conventional diamond through the elimination of left-turning traffic at the crossroad ramp terminals.

   Although there is a mixture of free-flowing and controlled terminals on the crossroad, there is little operational difficulty because the relative turning volumes and the arrangement of the ramp designs are compatible. Of the two types, Type A is probably more desirable, because it eliminates all conflicting left-turns from the crossroad.

HARD COPIES UNCONTROLLED

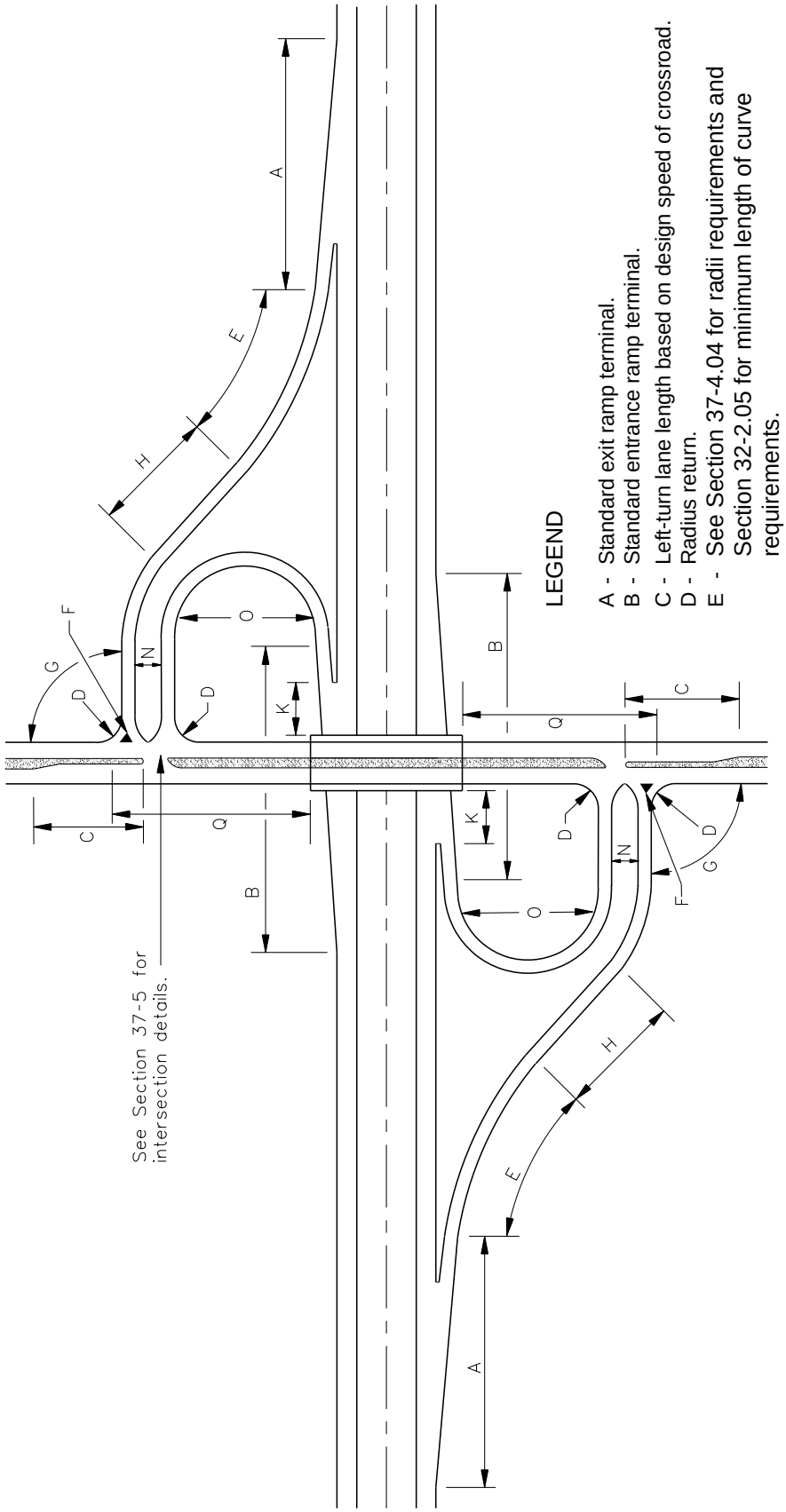

LEGEND

A - Standard exit ramp terminal.
B - Standard entrance ramp terminal.
C - Left-turn lane length based on design speed of crossroad.
D - Radius return.
E - See Section 37-4.04 for radii requirements and Section 32-2.05 for minimum length of curve requirements.
F - Directional corner island. See Section 36-2.02.
G - Typically 90 degrees.
H - Minimum tangent distance between curves.
K - 100 ft (30 m) minimum.
N - Ditch section width, minimum 50 ft (15 m).
O - Ramp radii compounded at 2:1.
Q - Minimum distance between structure and exit ramp based on intersection sight distance.

Note: Where the two ramps parallel each other, the elevations of the left edge of the outer ramp should approximately match the left edge elevations of the inner loop ramp.

PARTIAL CLOVERLEAF INTERCHANGE LAYOUT
(Two-Quadrant – Type A)

Figure 37-3.P

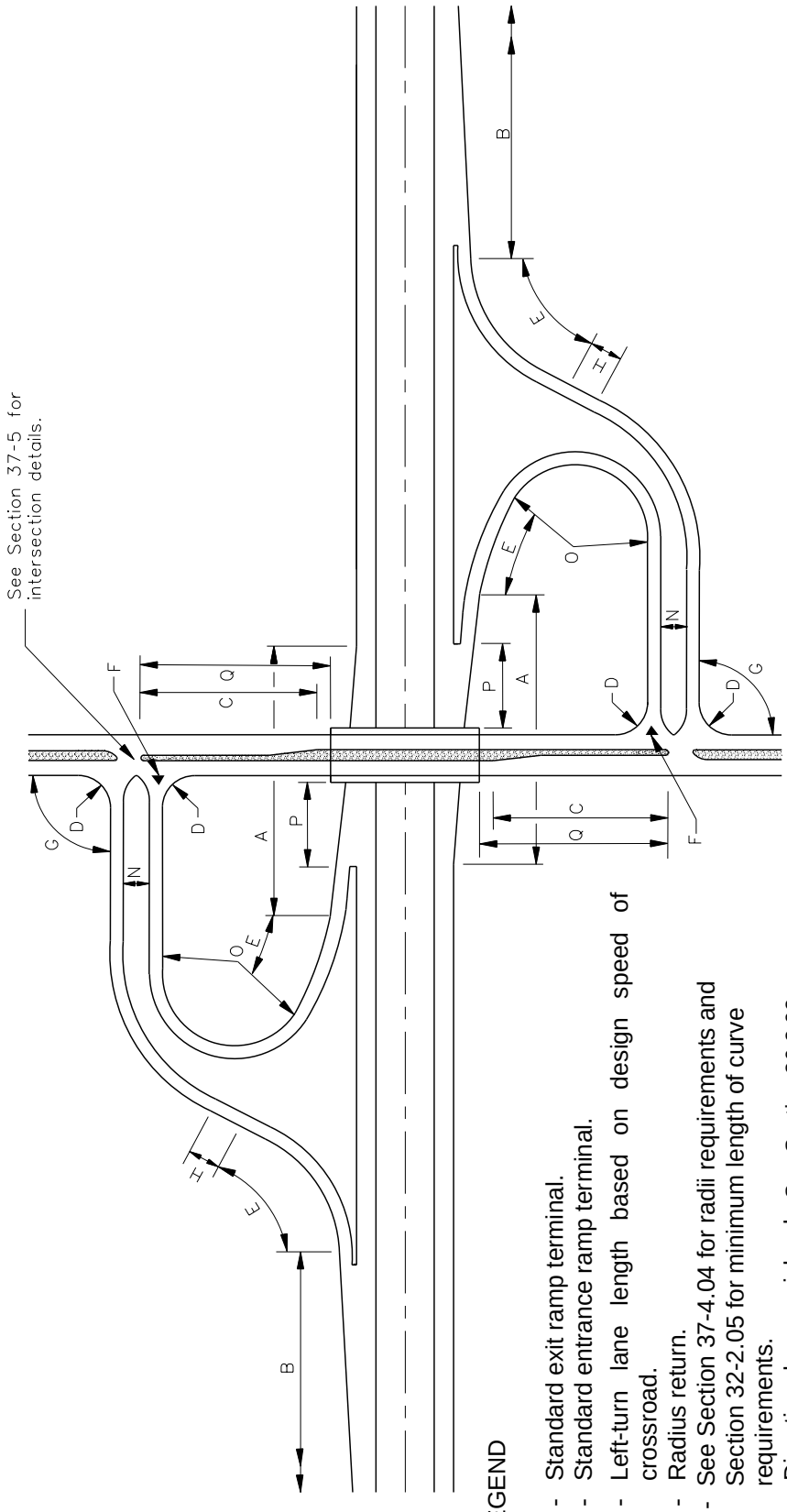

LEGEND

A - Standard exit ramp terminal.
B - Standard entrance ramp terminal.
C - Left-turn lane length based on design speed of crossroad.
D - Radius return.
E - See Section 37-4.04 for radii requirements and Section 32-2.05 for minimum length of curve requirements.
.F - Directional corner island. See Section 36-2.02.
G - Typically 90 degrees.
H - Minimum tangent distance between curves.
N - Ditch section width, minimum 50 ft (15 m).
O - Ramp radii compounded at 2:1.
P - Minimum 3 seconds travel time at design speed of mainline to physical nose.
Q - Minimum distance between structure and exit ramp based on intersection sight distance.

PARTIAL CLOVERLEAF INTERCHANGE LAYOUT
(Two-Quadrant – Type B)

Figure 37-3.Q

HARD COPIES UNCONTROLLED

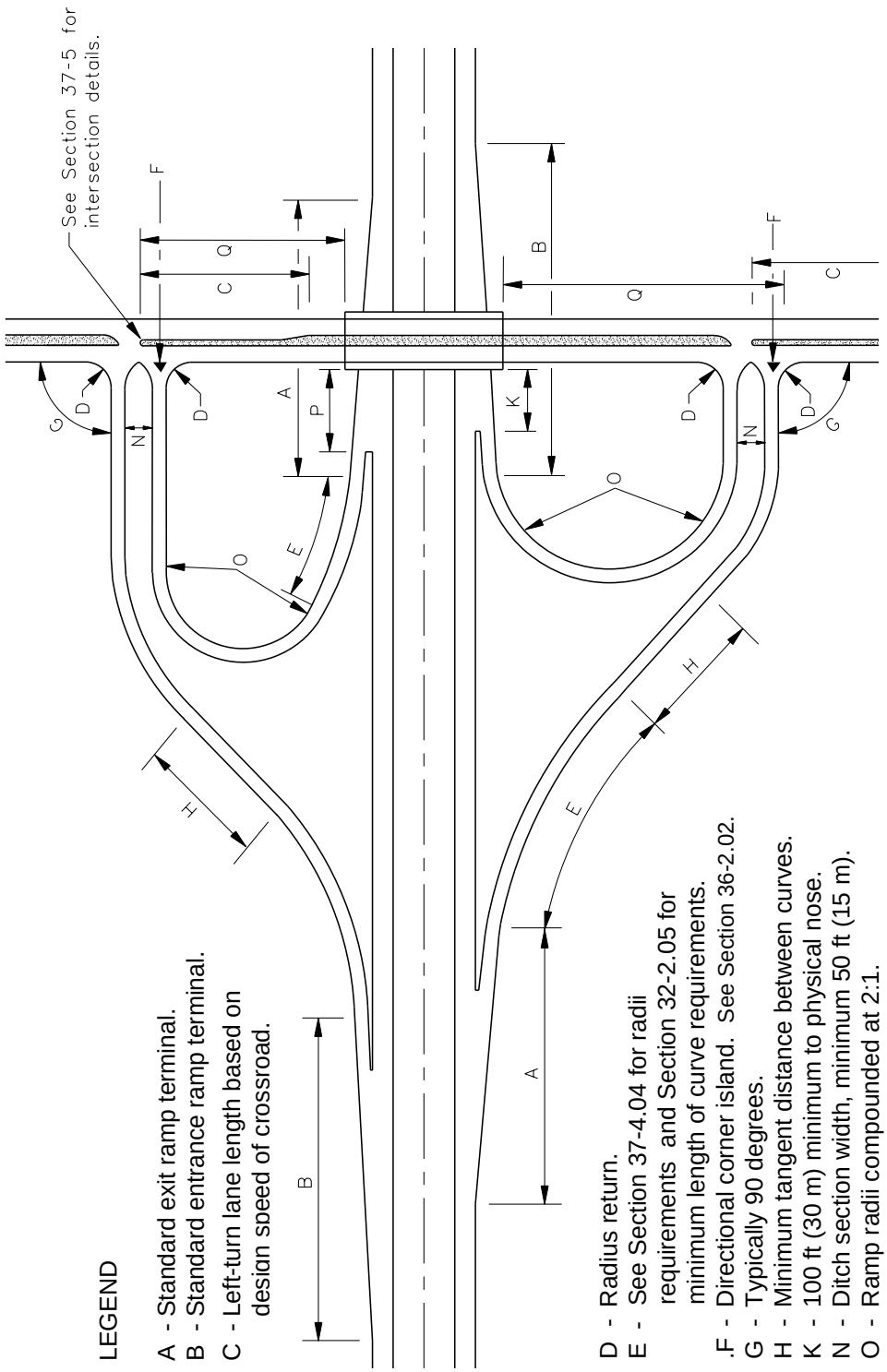

LEGEND

A - Standard exit ramp terminal.
B - Standard entrance ramp terminal.
C - Left-turn lane length based on design speed of crossroad.
D - Radius return.
E - See Section 37-4.04 for radii requirements and Section 32-2.05 for minimum length of curve requirements.
F - Directional corner island. See Section 36-2.02.
G - Typically 90 degrees.
H - Minimum tangent distance between curves.
K - 100 ft (30 m) minimum to physical nose.
N - Ditch section width, minimum 50 ft (15 m).
O - Ramp radii compounded at 2:1.
P - Minimum 3 seconds travel time at design speed of mainline to physical nose.
Q - Minimum distance between structure and exit ramp based on intersection sight distance.

Note: Where the two ramps parallel each other, the elevations of the left edge of the outer ramp should approximately match the left edge elevations of the inner loop ramp.

PARTIAL CLOVERLEAF INTERCHANGE LAYOUT
(Two-Quadrant – Type C)

Figure 37-3.R

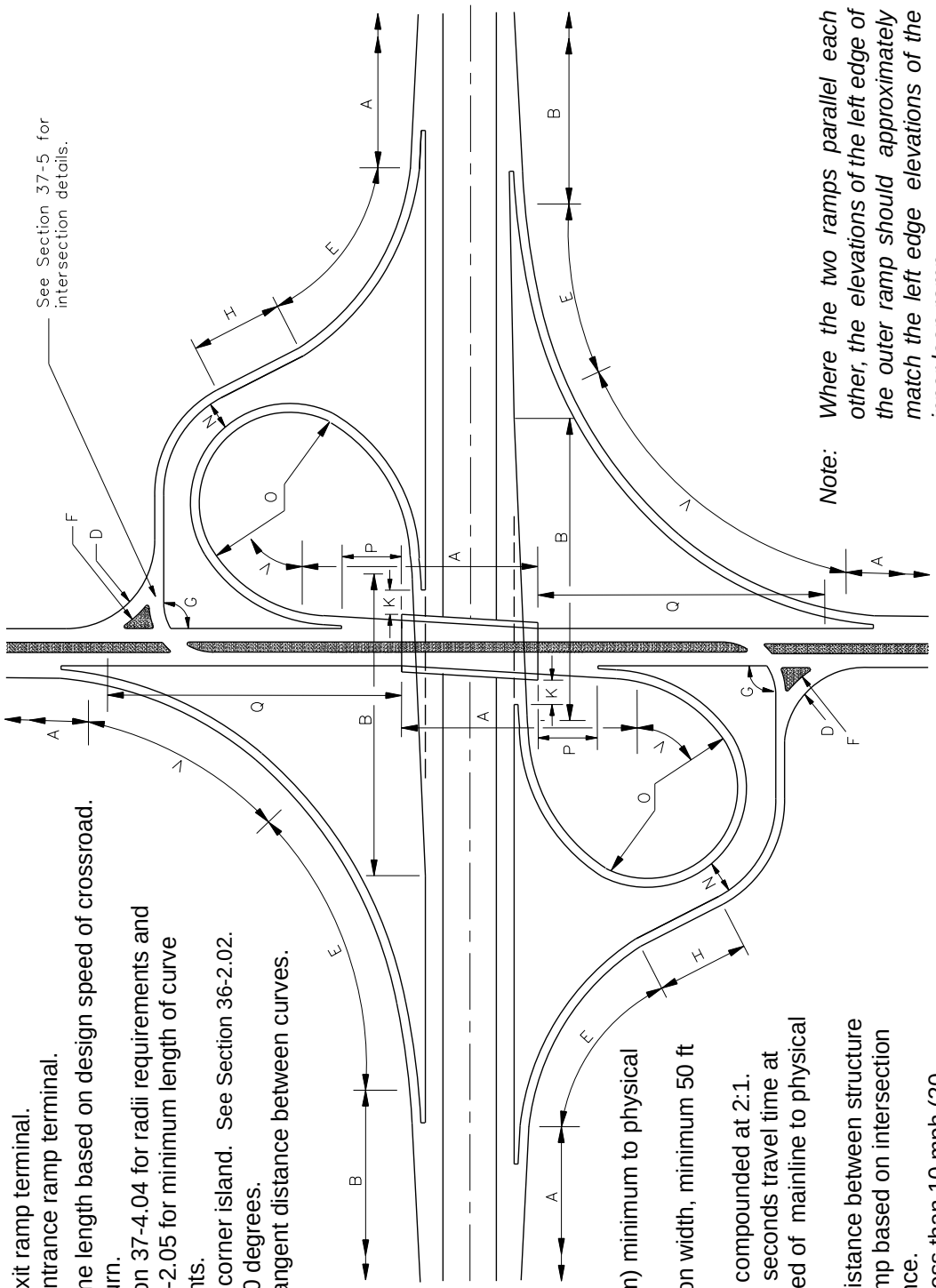

LEGEND

A - Standard exit ramp terminal.
B - Standard entrance ramp terminal.
C - Left-turn lane length based on design speed of crossroad.
D - Radius return.
E - See Section 37-4.04 for radii requirements and Section 32-2.05 for minimum length of curve requirements.
F - Directional corner island. See Section 36-2.02.
G - Typically 90 degrees.
H - Minimum tangent distance between curves.
K - 100 ft (30 m) minimum to physical nose.
N - Ditch section width, minimum 50 ft (15 m).
O - Ramp radii compounded at 2:1.
P - Minimum 3 seconds travel time at design speed of mainline to physical nose.
Q - Minimum distance between structure and exit ramp based on intersection sight distance.
V - Curve not less than 10 mph (20 km/hr) below cross-road design speed. See Section 37-4.04 for radii requirements and Section 32-2.05 for minimum length of curve requirements.

Note: Where the two ramps parallel each other, the elevations of the left edge of the outer ramp should approximately match the left edge elevations of the inner loop ramp.

PARTIAL CLOVERLEAF INTERCHANGE LAYOUT
(Four-Quadrant – Type A)

Figure 37-3.S

HARD COPIES UNCONTROLLED

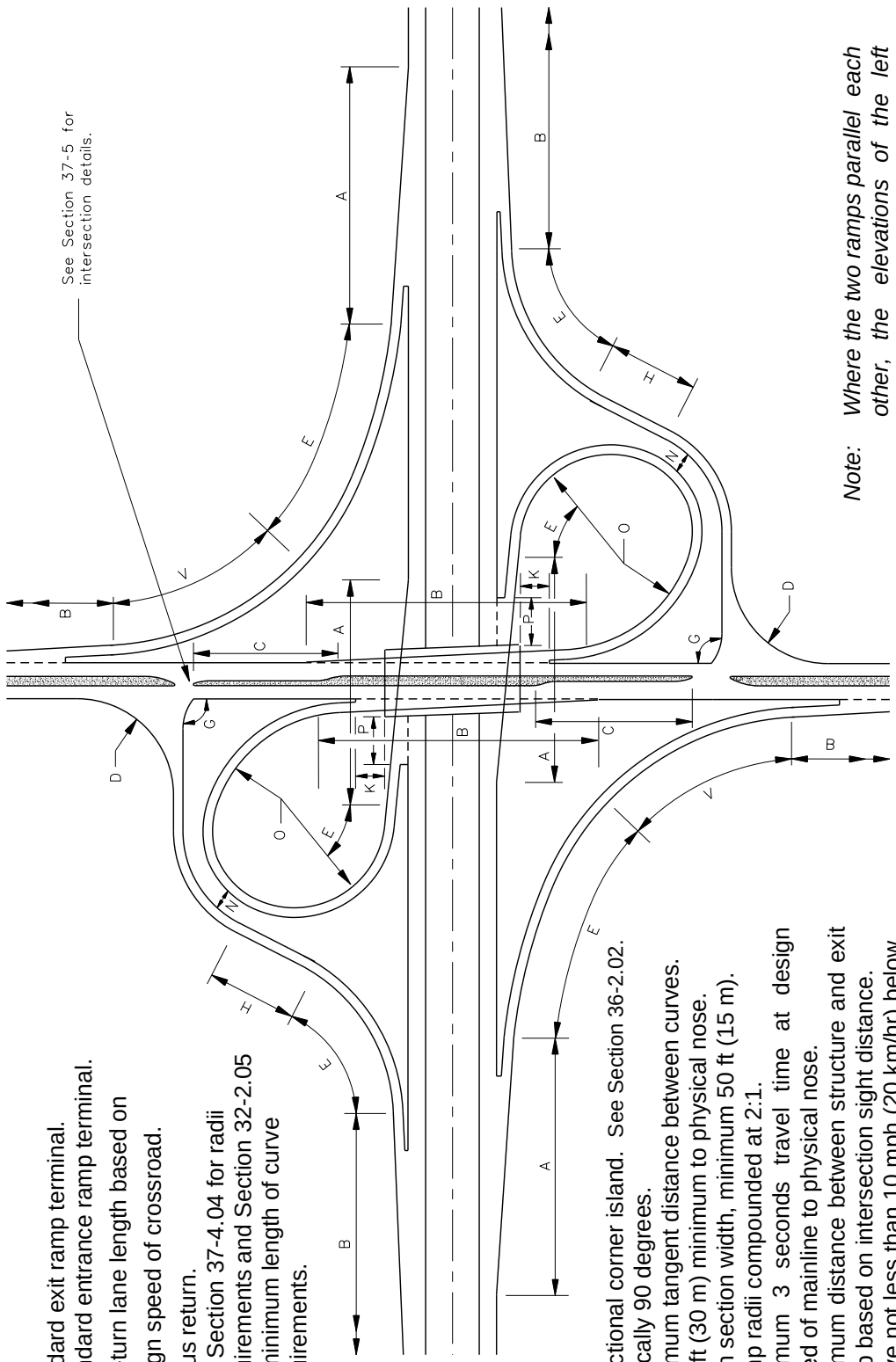

LEGEND

A - Standard exit ramp terminal.
B - Standard entrance ramp terminal.
C - Left-turn lane length based on design speed of crossroad.
D - Radius return.
E - See Section 37-4.04 for radii requirements and Section 32-2.05 for minimum length of curve requirements.
F - Directional corner island. See Section 36-2.02.
G - Typically 90 degrees.
H - Minimum tangent distance between curves.
K - 100 ft (30 m) minimum to physical nose.
N - Ditch section width, minimum 50 ft (15 m).
O - Ramp radii compounded at 2:1.
P - Minimum 3 seconds travel time at design speed of mainline to physical nose.
Q - Minimum distance between structure and exit ramp based on intersection sight distance.
V - Curve not less than 10 mph (20 km/hr) below crossroad design speed. See Section 37-4.04 for radii requirements and Section 32-2.05 for minimum length of curve requirements.

Note: Where the two ramps parallel each other, the elevations of the left edge of the outer ramp should approximately match the left edge elevations of the inner

PARTIAL CLOVERLEAF INTERCHANGE LAYOUT
(Four-Quadrant – Type B)

Figure 37-3.T

37-3.07(b) Two-Quadrant Parclo Interchange

Figures 37-3.P, 37-3.Q, and 37-3.R provide the general design and layout criteria for Type A, Type B, and Type C parclo cloverleafs, respectively. During the layout and design of the two-quadrant partial cloverleaf, consider the following steps:

3. Ramp/Crossroad Intersection Location:

   a. Type A. Place the physical nose of the standard entrance terminal a minimum of 100 ft (30 m) upstream from the structure. Design the smallest loop radius with a 30 mph or 40 mph (50 km/hr or 60 km/hr) design speed in rural areas and 25 mph or 30 mph (40 km/hr or 50 km/hr) design speed in urban areas. Project a tangent line from the loop radius to intersect with the crossroad at approximately 90 degrees. This procedure sets the location of both ramps and the location for the beginning of the left-turn lane on the crossroad. Check the intersection sight distance at the intersection of the exit ramp with the crossroad back to the left along the crossroad; see Section 36-6.

   b. Type B. Place the physical nose of the exit terminal three seconds of travel time beyond the structure. Design the smallest loop radius with a 30 mph to 40 mph (50 km/hr or 60 km/hr) design speed in rural areas and 25 mph or 30 mph (40 km/hr or 50 km/hr) design speed in urban areas. Project a tangent line from the loop radius to intersect with the crossroad at approximately 90 degrees. Layout the location of the left-turn lane on the crossroad to fit into the intersection of the entrance ramp. Check the intersection sight distance at the intersection of the exit ramp with the crossroad back to the right along the crossroad; see Section 36-6.

   c. Type C. The ramp/crossroad intersections for a Type C parclo are located in the same manner as the respective terminals for Types A and B.

4. Loop Ramps. For Type A parclos, the radii of succeeding arcs should increase in the direction of travel so that the traffic may enter the mainline highway at a reasonably high operating speed. For Type B parclos, the radii of succeeding arcs should decrease at a ratio of 2:1, with the arc of the sharpest curve being located immediately before the tangent section of the ramp.

5. Outer Connections. The tangent portions of the outer connectors are set parallel to the tangent portions of the loop ramps and are separated by a 50 ft (15 m) median. This width provides for a suitable common drainage section and minimizes headlight glare from opposing traffic. The remaining portion of the outer connection is developed concentric with the loop ramp and then follows a line approximately 45 degrees in relationship to the mainline. The intervening tangent length between the reverse curves should be no less than the sum of 67% of the two superelevation runoff lengths.

HARD COPIES UNCONTROLLED

37-3.07(c) Four-Quadrant Parclo Interchange

Figures 37-3.S and 37-3.T illustrate the typical design and layout criteria for four-quadrant partial cloverleaf interchange Types A and B. The design procedures for the four-quadrant parclo are similar to those for the cloverleaf and the corresponding two-quadrant parclo. The loop ramps are designed in the same manner as those of the cloverleaf. However, because they use the standard entrance and exit terminals rather than the weaving section terminals, the loops are smaller than the conventional cloverleaf loops. The outer connectors are designed in the same manner as those of the two-quadrant parclo interchange.

Provide a common drainage section between the outer connectors and the free-flow loops and set the tangent approach to the crossroad to intersect the crossroad at approximately 90 degrees. The right-turn free-flow directional ramps located in opposite quadrants consist of compound circular arcs where the adjacent radii should not exceed a ratio of 2:1. The standard exit and entrance terminals of the directional ramps are located a certain minimum distance from the intersection of the outer connections with the crossroad. These features are illustrated in Figures 37-5.K and 37-5.L.

37-3.08 <u>Trumpet Interchange</u>

37-3.08(a) General

The trumpet type interchanges, illustrated in Figures 37-3.U and 37-3.V, are examples of three-leg interchanges where three of the turning movements are accommodated with directional or semi-directional ramps and one movement by a loop ramp.

Trumpet Types A and B are used primarily:

- at intersections with non-freeway spur connections or routes which are terminated at the freeway,
- at intersections with other highways which are contiguous with the freeway for a short distance and then diverge on their own alignment, or
- where future expansion to the unused quadrant is not practical or likely.

They are typically limited to intermediate traffic volumes that can be accommodated by single-lane ramps.

The “bell” of the trumpet is normally oriented to favor the predominant turning movements. Where the volume of traffic exiting from the freeway exceeds the volume entering from the minor highway, use the trumpet Type A. Where the volume entering from the minor highway exceeds the volume exiting from the freeway, use the trumpet Type B. Where the entering and exiting volumes are comparable, the trumpet Type A is preferred due to its better operational characteristics.

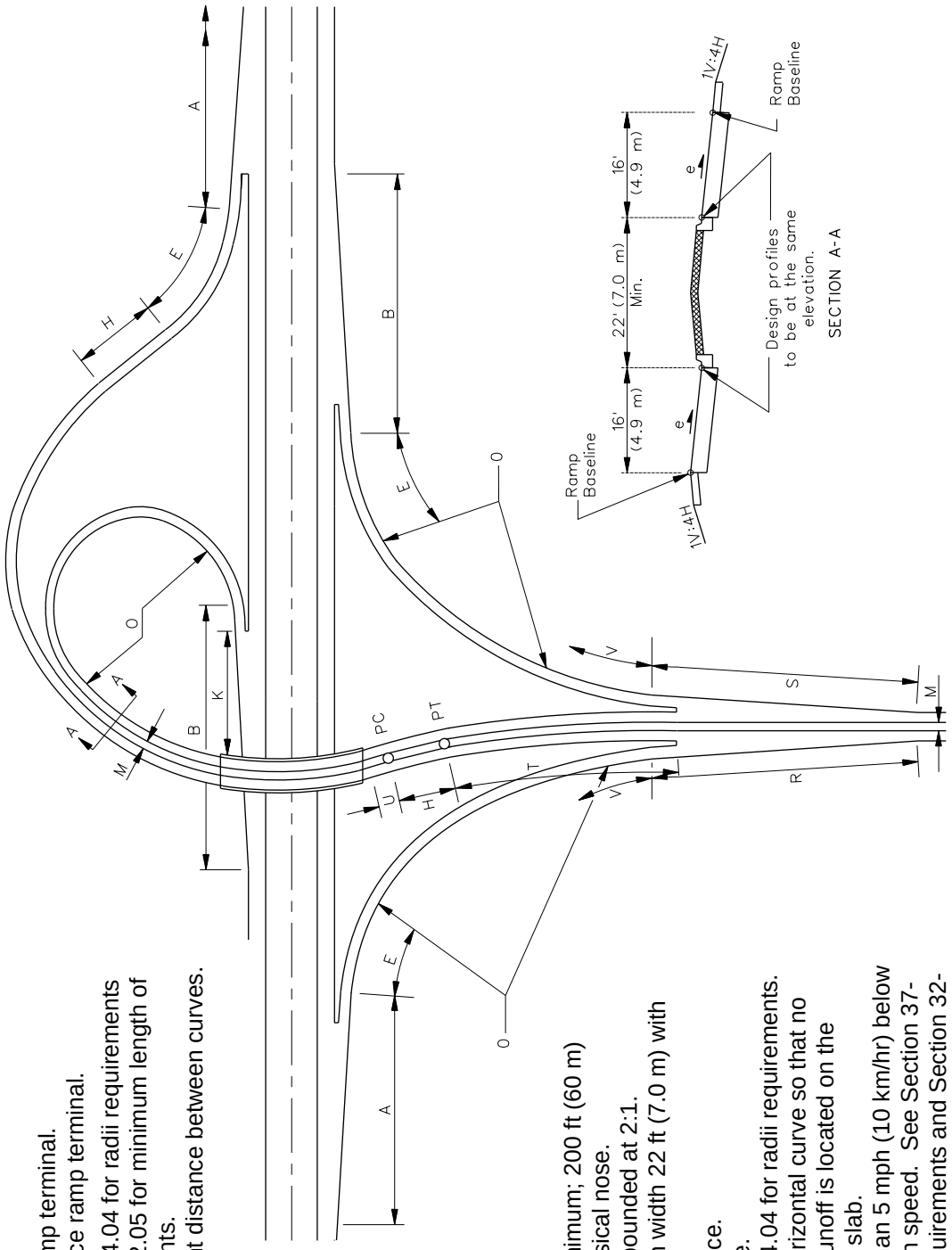

LEGEND

A - Standard exit ramp terminal.
B - Standard entrance ramp terminal.
E - See Section 37-4.04 for radii requirements and Section 32-2.05 for minimum length of curve requirements.
H - Minimum tangent distance between curves.
K - 100 ft (30 m) minimum; 200 ft (60 m) desirable to physical nose.
O - Ramp radii compounded at 2:1.
M - Minimum median width 22 ft (7.0 m) with C&G.
R - Minor convergence.
S - Minor divergence.
T - See Section 37-4.04 for radii requirements.
U - Locate end of horizontal curve so that no superelevation runoff is located on the bridge approach slab.
V - Curve not less than 5 mph (10 km/hr) below crossroad design speed. See Section 37-4.04 for radii requirements and Section 32-2.05 for minimum length of curve requirements.

TRUMPET INTERCHANGE LAYOUT (Type A)

Figure 37-3.U

HARD COPIES UNCONTROLLED

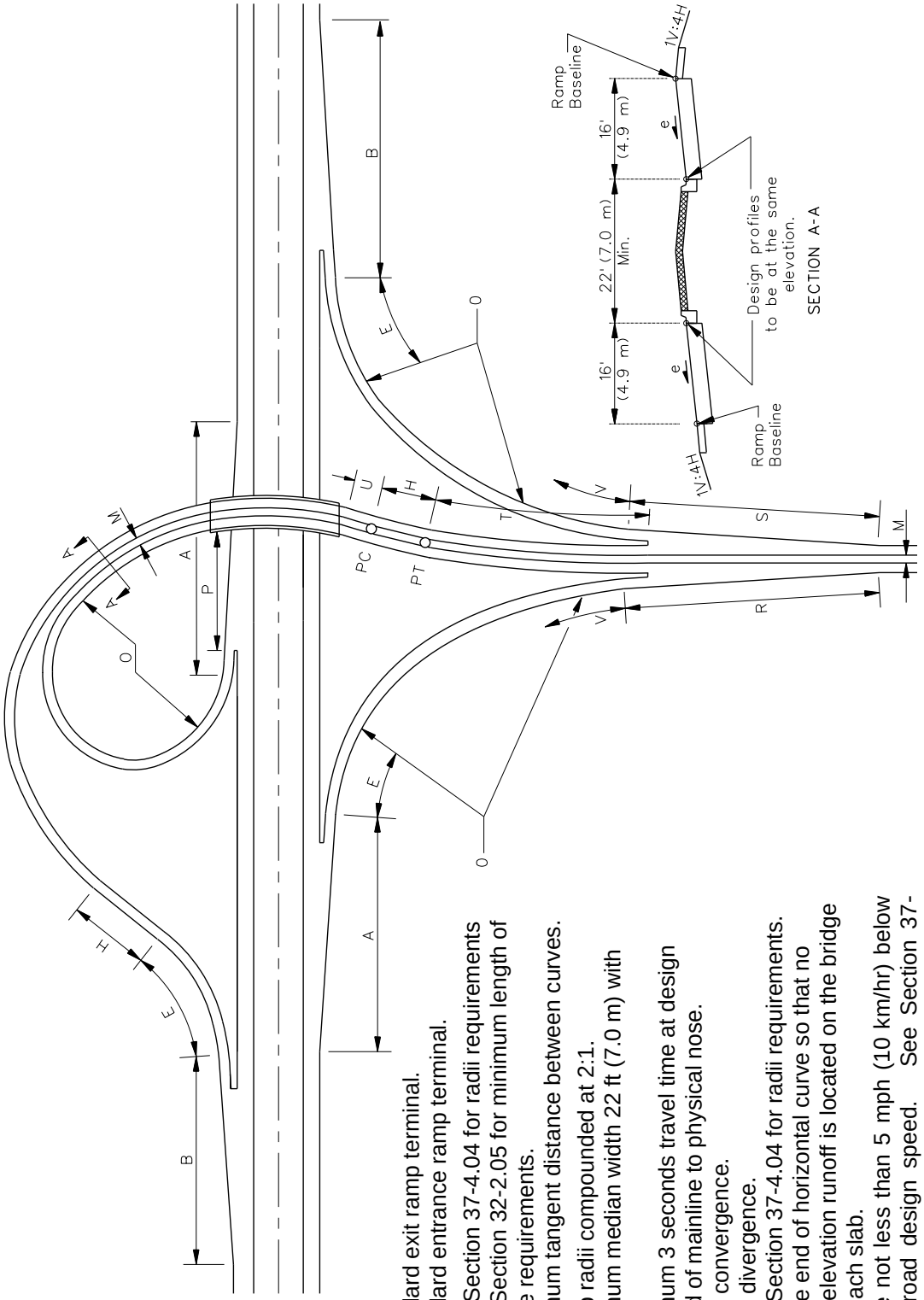

LEGEND

A - Standard exit ramp terminal.
B - Standard entrance ramp terminal.
E - See Section 37-4.04 for radii requirements and Section 32-2.05 for minimum length of curve requirements.
H - Minimum tangent distance between curves.
O - Ramp radii compounded at 2:1.
M - Minimum median width 22 ft (7.0 m) with C&G.
P - Minimum 3 seconds travel time at design speed of mainline to physical nose.
R - Minor convergence.
S - Minor divergence.
T - See Section 37-4.04 for radii requirements.
U - Locate end of horizontal curve so that no superelevation runoff is located on the bridge approach slab.
V - Curve not less than 5 mph (10 km/hr) below crossroad design speed. See Section 37-4.04 for radii requirements and Section 32-2.05 for minimum length of curve requirements.

TRUMPET INTERCHANGE LAYOUT (Type B)

Figure 37-3.V

37-3.08(b) Design Considerations

Figures 37-3.U and 37-3.V illustrate the design and layout criteria for Type A and Type B trumpet interchanges. Use Type A configuration where the predominate movement is left-turns from the freeway to the minor road. Use Type B configuration where the predominant movement is right turns from the freeway to the minor road.

In designing the trumpet interchange, first develop the location of the loop ramp and structure. This requires a certain amount of trial and error because the loop is a continuation of the minor highway rather than a connection to a standard entrance and exit terminal. The loop and the outer connection are placed on curved alignment as they pass over the major highway. Reverse curvature is used before the structure for operational purposes. Because the minor highway is typically carried over, full superelevation should be attained before the structure approach slab so that the structure and approach slabs may be designed with a constant superelevation rate.

The outer connector is located adjacent and parallel to the roadway of the loop ramp and the rest of the ramp is located based on the selected design speed. These directional ramps provide turning movements to and from the minor highway through the use of standard entrance and exit terminals on the freeway and minor convergence and divergence terminals on the minor highway. Design the directional ramps for right turns to and from the minor highway using compound curves and a minimum design speed of 50 mph (80 km/hr).

As shown in Figures 37-3.U and 37-3.V, the loop ramps or outer connectors do not exit from the minor highway with the standard terminals, but are a continuation of the single-lane roadways formed by the minor divergence and convergence terminals; see Figures 37-6.R and 37-6.T. Because of sight distance restrictions, due to the presence of the structure or piers and higher possible speeds on the stem approach, motorists may be confronted with an abrupt transition in speed and alignment immediately beyond the structure. To minimize these operational difficulties, place the ramps on curved alignment before passing over or under the freeway with larger radii.

37-3.09 <u>Directional and Semi-Directional Interchanges</u>

Directional or semi-directional ramps are used for heavy left-turn movements, to reduce travel distance, to increase speed and capacity, and to eliminate weaving. These types of connections allow an interchange to operate at a better level of service than is possible with loops. Figures 37-3.W and 37-3.X illustrate common directional and semi-directional ramps and/or roadways. Left-hand exits and entrances should be avoided.

Directional or semi-directional interchanges are most often provided in urban or suburban areas at freeway-to-freeway or freeway-to-arterial intersections. In rural areas, there is generally an insufficient traffic volume to justify the use of directional or semi-directional ramps in all quadrants. A directional interchange provides the highest possible capacity and level of service, but it is often costly to construct due to the number of structures required and amount of embankment.

HARD COPIES UNCONTROLLED

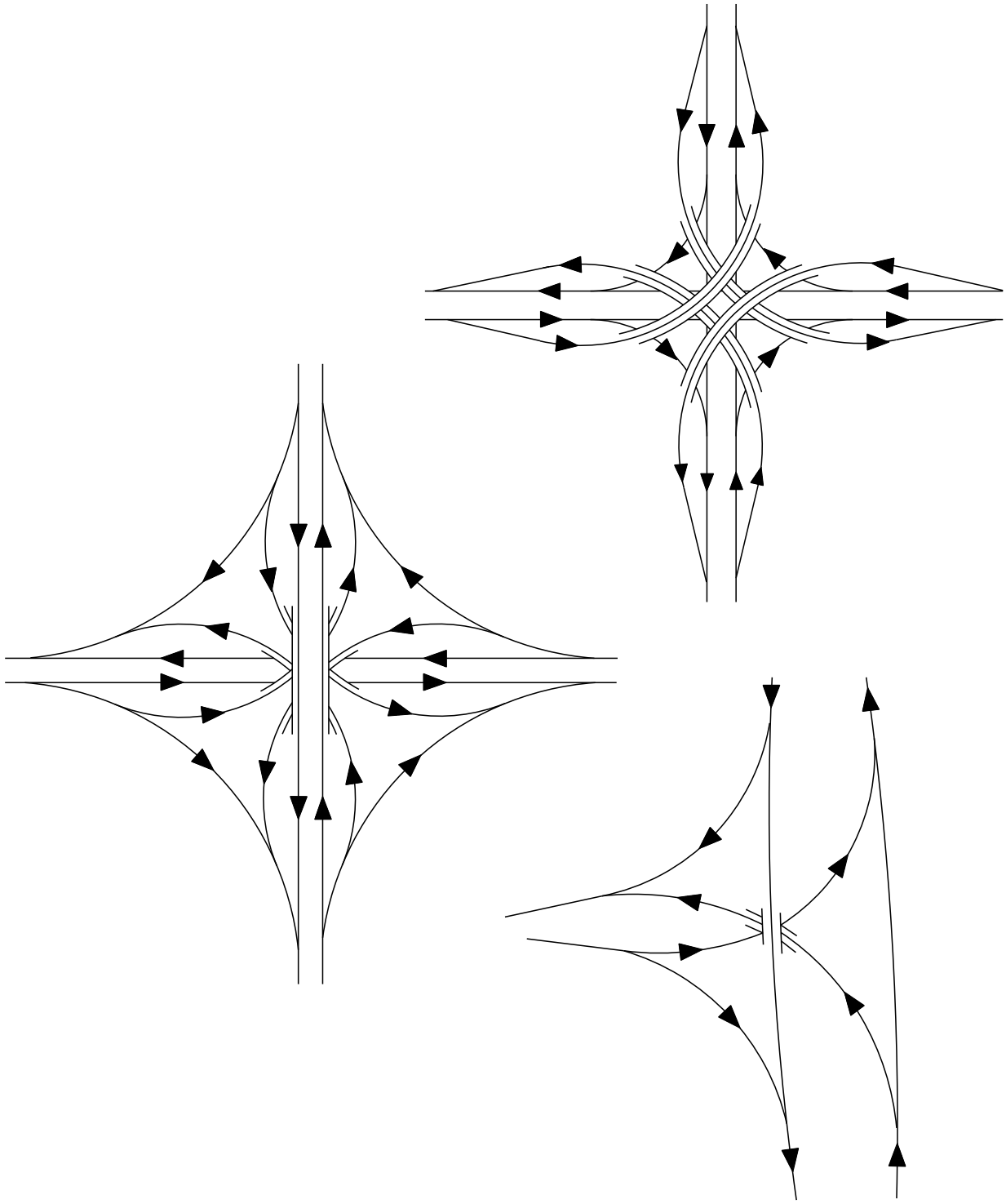

DIRECTIONAL INTERCHANGES

Figure 37-3.W

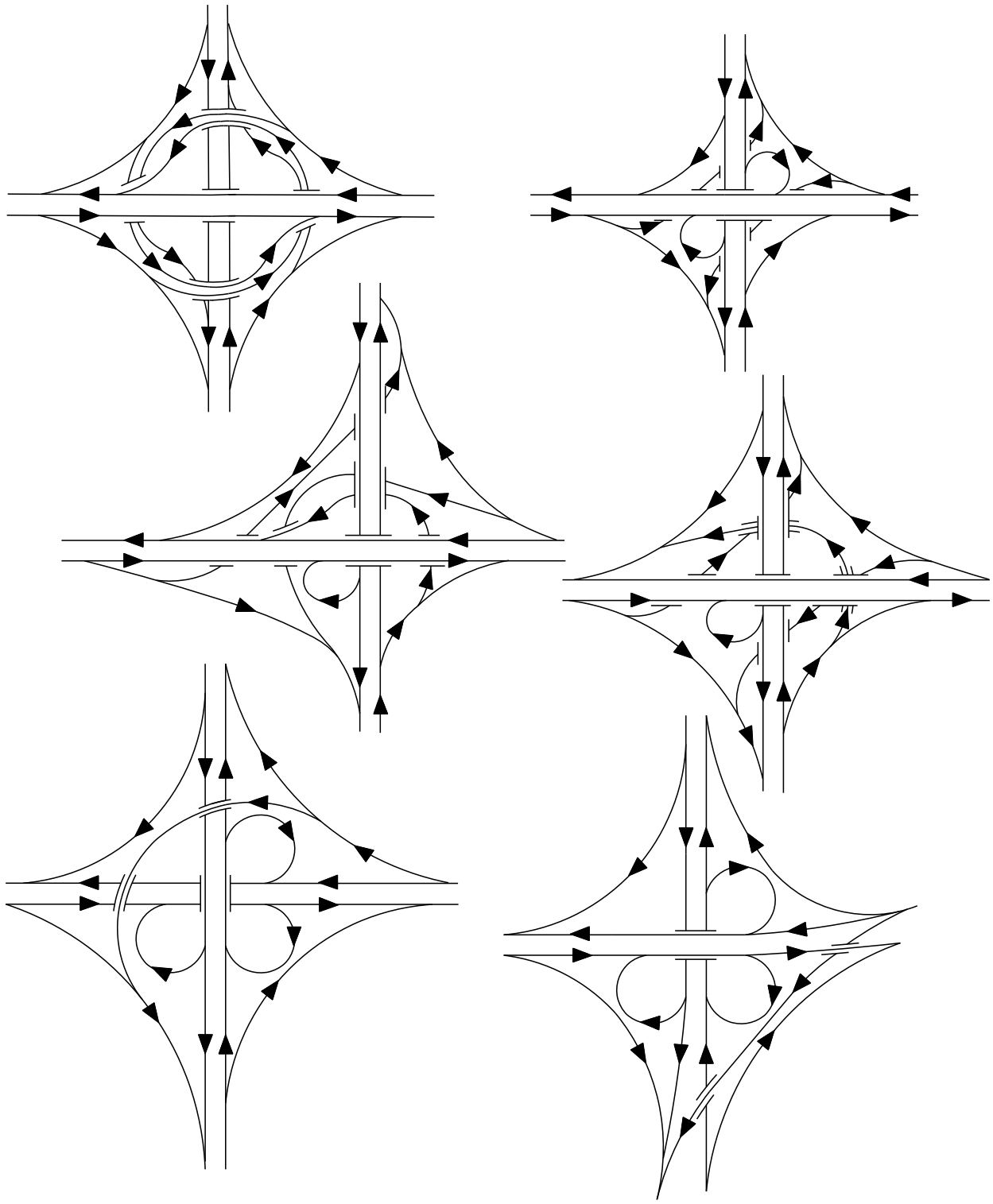

SEMI-DIRECTIONAL INTERCHANGES

Figure 37-3.X

HARD COPIES UNCONTROLLED

No uniform design procedures can be established for directional or semi-directional ramps at interchanges due to the great variety of configurations. Loop ramps and weaving sections, where used, are designed as discussed in Sections 37-3.06 and 37-3.07. Because motorists perceive that higher operating speeds are possible on directional and semi-directional roadways, the alignment of these facilities should be as free flowing as practical.

37-3.10 Diverging Diamond Interchange (Double Crossover Diamond Interchange)

A diverging diamond interchange (DDI) has the basic form of a standard diamond interchange but incorporates directional crossover intersections that transpose traffic along the crossroad between the ramp terminals. DDIs thereby typically accommodate left-turning onto the on-ramps as free-flow movements and eliminate the need for left-turn signal phasing. This helps reduce overall interchange delay in comparison to other interchange types. Figure 37-3.Y shows a schematic layout of a typical DDI. Figure 37-3.Z provides more detailed information on geometry, signing, and striping of a typical DDI, and identifies some issues to consider in the design of a DDI. For additional guidance see the FHWA Report "Diverging Diamond Interchange Informational Guide" (2014) and other resources at the following FHWA website: https://safety.fhwa.dot.gov/intersection/innovative/crossover/.

37-3.10(a) General

Within certain contexts and project constraints DDIs can offer improved traffic-carrying capabilities, safer operations, and reduced right-of-way needs in comparison to other interchange designs. Some DDI advantages and disadvantages include:

Advantages:

- By separating the crossroad left-turn movements from the signalized intersection operations overall delay can be reduced, since the two-phase signal operations can minimize lost time per cycle. Where left-turning movements are high the operational advantages can be very significant.

- Safety performance is generally improved since there are fewer conflicts points at the signalized intersections, and specific conflicts typically involved with serious crashes are eliminated, e.g. crossing movements from the off ramps. National crash modification factors (CMFs) are available through the online CMF Clearinghouse to aid in predicting DDI safety performance.

- Where shared use paths and/or sidewalks are included along the crossroad the number of conflict points between motor vehicles and non-motorized users can be reduced. Non-motorized users can also use median refuge areas to cross one direction of traffic at a time.

- The geometrics along the crossroad encourage lower traffic speeds, typically 35 mph (55 km/hr) or less, and therefore can reduce the severity of crashes that may occur.

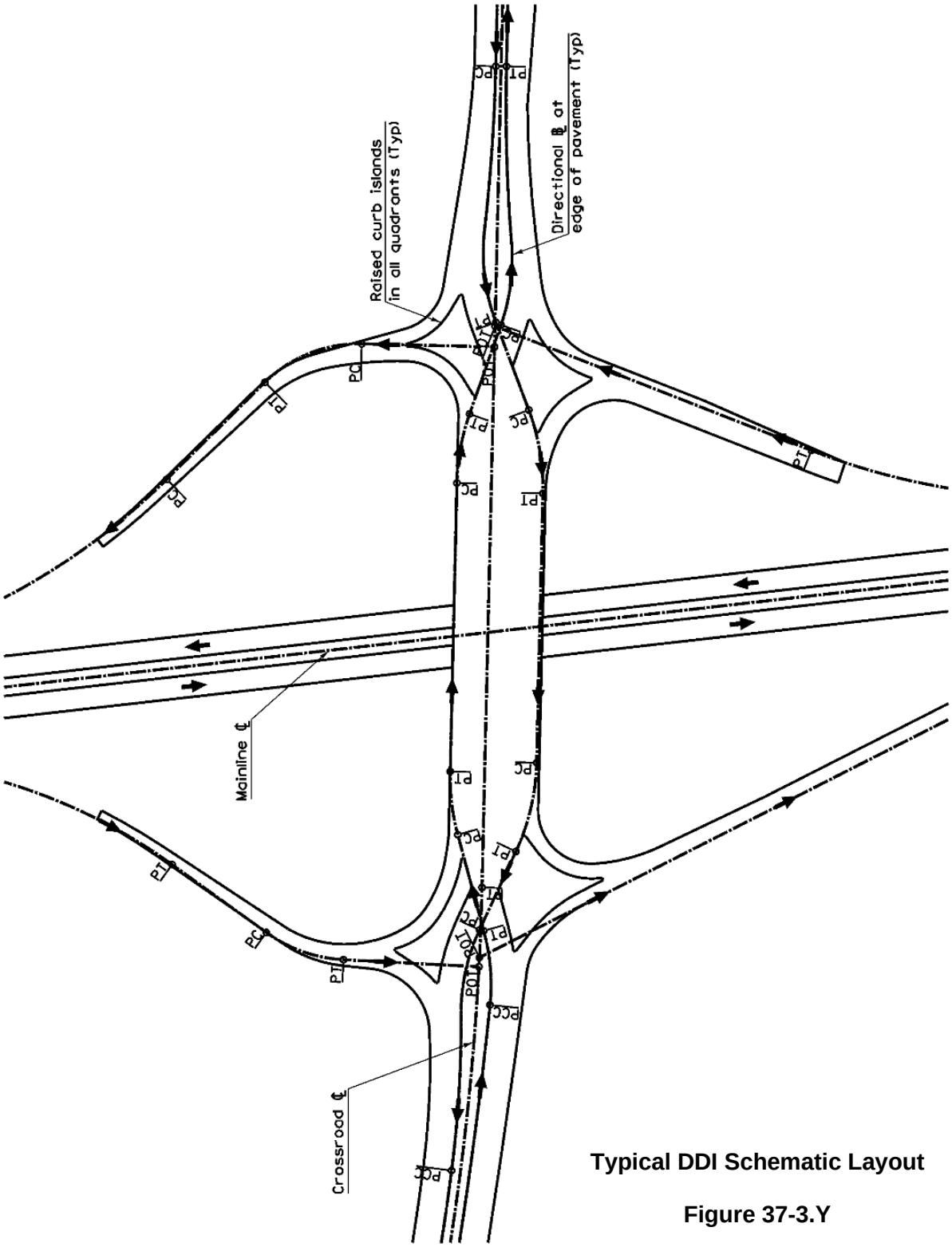

Typical DDI Schematic Layout

Figure 37-3.Y

HARD COPIES UNCONTROLLED

- Intersection spacing can better allow for traffic signal progression along the crossroad due to the reduced speeds.
- Because left-turning vehicles need not be queued in the median it may be possible to substantially reduce total bridge deck area, typically a major element of interchange cost.
- The flexibility in alignment options can reduce cost, allow for continued use of an existing structure, and create advantageous staging options.

Disadvantages:

- Operational concerns must be considered for unfamiliar drivers. For example, it has been observed that some drivers may look along the wrong set of lanes for approaching traffic when turning from an exit ramp. Signing and pavement marking are critical and different than for other interchange forms.
- The DDI design removes the opportunity to directly route traffic (or operational equipment) along an exit-ramp-to-entrance-ramp path. This may be considered a relevant movement for traffic incident management or the movement of permit loads.
- For lower volume locations in rural contexts, especially where there are low left-turning volumes from the crossroad, DDIs may not provide any operational or safety benefits over traditional diamond configurations.
- Where signals would not otherwise be warranted the crossings of the two directions of through traffic along the crossroad would likely create additional conflicts and delay.

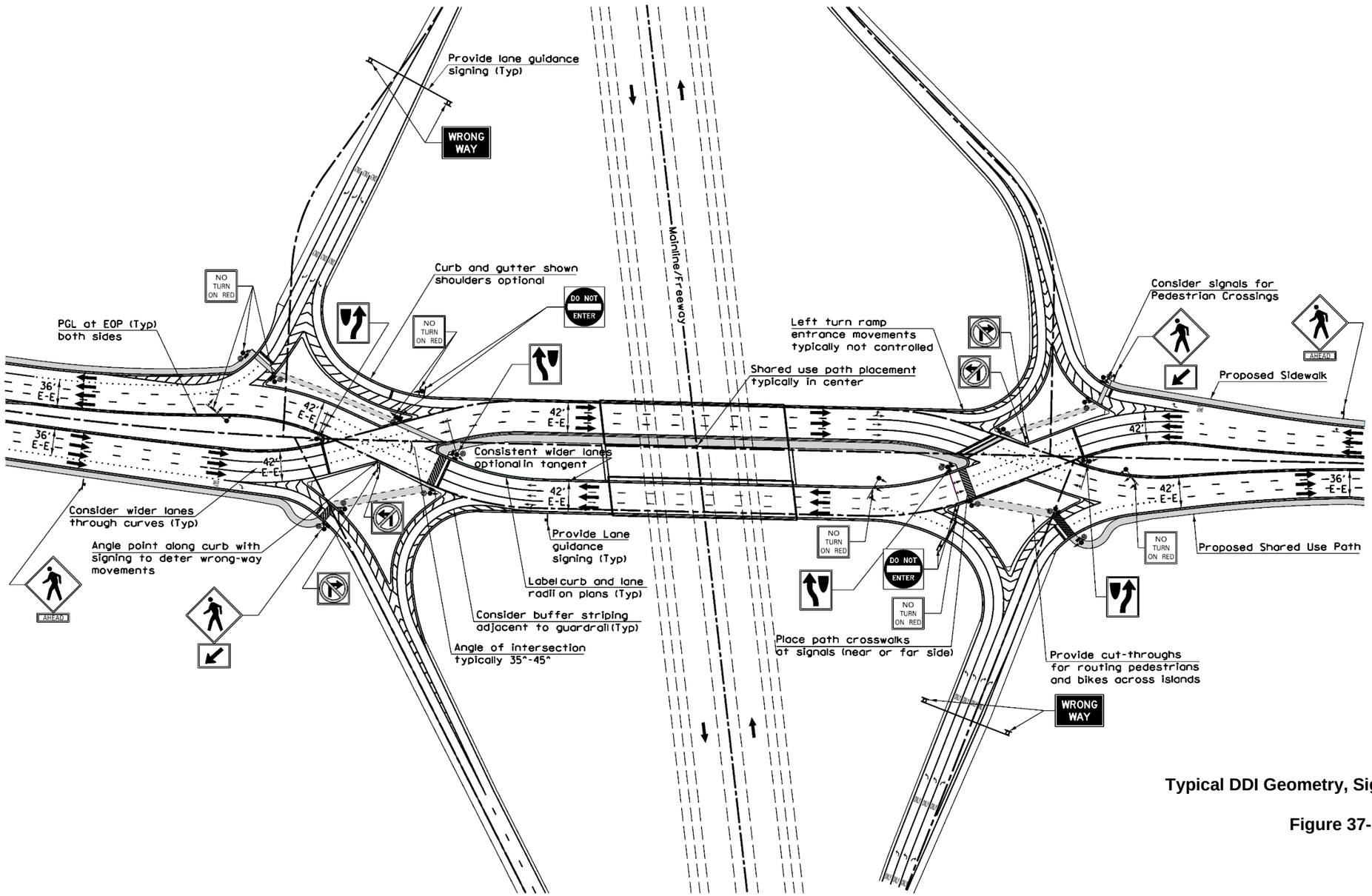

Typical DDI Geometry, Signing and Striping

Figure 37-3.Z

HARD COPIES UNCONTROLLED

37-3.10(b) Design Considerations

DDI design requires consideration of issues unique to this interchange type. Consider the following when designing a DDI:

1. Over versus Under. One of the first things the designer must address is whether to place the crossroad over or under the freeway or expressway. Especially on retrofit projects, this decision is usually dictated by existing conditions. Either option is possible for a DDI. Section 44-4.02 discusses additional considerations when determining whether to place the crossroad over or under the freeway.

2. Design Speed. Design speeds for the through movements along the crossroad will typically be 35 mph (55 km/hr) or lower. Desirably, the design speed along the crossroad should be 25 mph to 35 mph (40 km/hr to 55 km/hr). The primary goal is to promote a consistent and moderate speed through the crossover intersections while reinforcing the intended movements through geometric design, signing, and pavement marking. The free-flowing left-turn movements onto the ramps may be designed for speeds of 10 mph to 20 mph (15 km/hr to 30 km/hr), with the lower end of this range being advisable for unsignalized ramp movements where pedestrian crossings may be present. The design speed of the crossroad outside of the area of influence of the interchange will typically be higher than that within the interchange, but the regulatory speed limit need not typically be lowered for the short section of roadway, and the geometry of the roadway will work to control travel speeds. Utilize W3-3 signal ahead warning signs to identify the traffic signal and, if there is a 10 mph or greater difference versus the approach, also identify the lower advisory speed.

3. Continued Use of an Existing Structure. Either a single bridge or dual bridges could be utilized for a crossroad passing over a freeway. Utilizing an existing bridge structure in the ultimate condition usually offers substantial cost advantages in comparison to a new larger structure. At retrofit locations DDIs provide inherent flexibility of alignments at lower design speeds and can provide opportunities to utilize existing structures and minimize staging and construction costs.

6. Roadway Alignment and Superelevation. Design the curves for the crossroad through movements using AASHTO Method 2 to distribute superelevation and side friction. Refer to Section 48-5.02. Open Roadway conditions (using AASHTO Method 5) may exist along the crossroad adjacent to the interchange, but drivers are expected to accept a higher driving demand through the lower-speed crossover curves. Typically limit the design superelevation rate to 2.0 percent maximum. Adverse crown slopes may be necessary at some locations due to the interactions of the two directions of travel through the intersection. It is of great importance to maintain positive drainage throughout all parts of the intersection.

   Curve radii approaching the crossover intersections will usually range between 250 ft (75 m) and 600 ft (180 m). Avoid abrupt reverse curvature (i.e. a point of reverse curvature - PRC) since such designs can make it difficult for drivers of larger vehicles to stay within their lanes. Instead, provide tangent sections through the intersections where possible,

and preferably extend the tangent onto the entry approach by 15 to 25 ft (5 to 8 m). Providing a Point of Curvature (PC) immediately on the departure side of the intersection creates little concern operationally.

In retrofit projects it may be appropriate to shift the alignment of only one of the two directional travelled ways and provide an asymmetrical design. Issues to consider related to alignment include: minimizing the cross section under or over a bridge, reducing ROW requirements, meeting necessary spacing of the ramp terminals, and providing staging flexibility. The vertical alignment of the crossroad should be assessed to ensure adequate sight lines approaching the signalized crossover intersections. Refer to further discussion of Traffic Signal Placement below.

7. Intersection Crossing Angle. At each intersection, the crossover intersection angle is an important design criterion that can affect both operational and safety performance. The crossing angle is the acute angle between the two directional travelled ways, based on the tangent sections or the lines perpendicular to the radii at points of reverse curvature. Although at most traditional intersections the goal is to provide 75 to 90-degree angles, such angles are not feasible or desirable at DDI crossover intersections. This is primarily due to the large footprint and overly sharp reverse curves that would likely be required with larger angles. The preferred range for the intersection angle is 35 to 45 degrees. Lower/shallower angles may increase the risk of wrong-way movements, compromise sight lines, and require greater driver head-turn. Shallow angles also tend to make intersections overly expansive, hamper operations and make crosswalk design more challenging. Note that as the number of lanes increases beyond two each way a crossover angle of 40 to 45 degrees may be appropriate to introduce adequate median width for the shared use path.

8. Intersection Sight Distance. Provide intersection sight distance as discussed in Section 36-6, checking both the vertical and horizontal planes. The profile of the crossroad should be relatively flat to allow motorists to see the entire crossroad surface and approaches in one view. The extent of head-turn required by drivers at any proposed right-turn-on-red locations is a key consideration if such movements will be allowed. Left-turn-on-red opportunities can be unique to DDIs and require similar assessment.

9. Pedestrian and Bicycle Accommodation. DDIs often provide good opportunities for separated and comfortable pedestrian accommodations. Shared use paths are usually the best way to optimize safety and accommodate less confident bicyclists along the crossroad at minimum cost. A sidewalk and/or a shared-use path will typically be incorporated within the median between the two directions of traffic. This center location allows for crosswalks to be placed where most or all traffic can be controlled by a signal. Crossings of right-turning entrance ramp traffic will require signalization or clearly-visible uncontrolled crossing safety countermeasures.

The two-phase DDI signal operations can better serve pedestrians by providing more crossing time per phase and/or shorter cycle lengths that can reduce wait times. Crossing distances are usually shorter and pedestrians can deal with one direction of

HARD COPIES UNCONTROLLED

vehicle traffic at a time. Barrier walls are typically incorporated along both sides of a median path but may not be required away from structures depending on speeds and offsets. Cut-through islands are used to provide clear and positive guidance to pedestrians near crosswalks. Bicyclists may also be accommodated directly on the roadway in the traffic lane or by provision of a bicycle lane or paved shoulder in each direction.

10. Lane Widths. Design lane widths for the crossroad through movements at DDIs based on speed, project context, and the need to accommodate the design vehicle either side-by side or in one lane. This choice can depend on the truck volumes at the site. It is usually impractical to apply the turning roadway design criteria in Section 36-2.03 to develop the lane widths for curved crossroad through movements. Review truck and other vehicle templates with the goal of providing lanes that are adequate, yet not excessively wide. Modest curvatures may allow lane widths of 12 to 14 ft (3.6 to 4.3 m). Tighter curves, especially when heavy truck volumes are high, could warrant through lane widths of up to 15 ft (4.6 m). Lanes wider than 15 ft (4.6 m) should be avoided since they may unduly increase intersection size and could create operational issues in tangent sections. As an alternative where truck templates indicate that additional operational width may be appropriate in urban cross sections, consider adding narrow shoulders of 2 to 3 ft (600 to 900 mm) along the crossroad. Also consider providing hatched buffers along guardrail locations to help reduce nuisance hits by trucks. Section 36-2.03 and vehicle turning software may be used for ramp approach and departure design. Include hatched or chevron striping to properly guide passenger cars along ramp movements while accommodating trucks.

11. Median Width and Design. DDI median width can vary with the independent directional crossroad alignments. Since left-turn storage is not required within the median, the minimum median width between the crossovers may be based on the width of a shared use path plus barrier walls, the proposed single or twin structures (when located over the freeway or expressway), or the proposed piers (when located under the freeway or expressway). Experience in other states has indicated that the use of colored/stamped median surfaces can improve driver understanding within DDIs. It seems that the median color change leading into a DDI helps drivers perceive the unique design and better follow the provided signing and marking guidance. When a paved median surface will be used within the limits of a DDI appropriately colored/stamped median surfaces should be included in the design. Maintenance is also reduced in comparison to grass medians.

12. Shoulders and Lane Striping. Shoulder considerations are different at DDIs than at other locations because of the reversal of the two directional pavements. Because the right-side shoulder is typically considered by motorists to be the most appropriate refuge location, the median is the better side to maintain wider shoulders on rural crossroads. Such right-side shoulders would also provide continuity for bicyclists using a shoulder (or bike lane) through the interchange.

13. Traffic Control Devices. Signals will normally be warranted at DDI intersections. Installation of signals is limited to locations meeting ILMUTCD warrants. No special traffic control devices, beyond those included in the ILMUTCD, are necessary or appropriate at a DDI.

    Some early national experience found that over-signing or over-marking DDIs to clarify the unusual traffic pattern could result in driver overload. Minimize potential driver confusion at a DDI by providing positive guidance to drivers in the form of exit ramp guide signing, lane use signing, and pavement markings. Consider guide and lane use signs to position drivers in appropriate lanes before entry into the interchange area. Warning signs should only be used to call driver attention to potential hazards that would be otherwise difficult to perceive. Where present, white edge lines are typically maintained on the right (median) side between intersections, based on driver familiarity. Contact the Bureau of Operations with any specific questions regarding proposed signing and pavement marking.

14. Traffic Signal Placement and Design. When determining signal head locations, proactively address the potential of lane confusion for some drivers. Mount a signal head directly over each travel lane. Consider providing supplemental near-side signal heads to reinforce the intersection traffic control, especially where alignment issues may restrict sight lines and where the maximum allowable distance from a stop line to a signal is approached. Refer to the ILMUTCD for signal head location requirements. Green arrow displays are typically recommended in lieu of circular green signal indications to further enhance directional guidance at DDI intersections. Contact the Bureau of Operations with any specific questions regarding the design of signal installations.

15. Operational Analysis. Use the *Highway Capacity Manual* (HCM) and *Highway Capacity Software* (HCS) to perform a detailed operational analysis of a DDI. Given the crossover geometry and documented DDI driver behavior, operational analysis for DDI interchanges includes several unique inputs, including those for lane utilization, saturation flow rate, lost time, and capacity of yield-controlled turns (where present). The procedures are documented in the HCM and applied in the current HCS. Note that off-ramp left- and right-turn movements may be a significant distance from the crossover, requiring longer intersection clearance (i.e. all-red) time.

    Where there are existing and adjacent signals, consideration of a DDI design alternative may dictate that a comparative analysis be completed for the alternatives under consideration. Synchro or VISSIM software may be used to model corridor traffic operations for alternatives. First perform location-specific calibration of the model for the existing corridor and then compare future no-build and build alternative conditions. Default settings in the software may be used, but analysts can and should apply local adjustments based on professional judgement. Such operational analysis should include any signalized intersections within one-half mile (800 m) of the interchange.

HARD COPIES UNCONTROLLED

The typical split-phasing of the signals can allow the two crossover movements to operate independently. Traffic progression along the crossroad can be favored in some periods, while prioritizing the turning movements from the ramps may sometimes be necessary to avoid queue build-up on the ramps. Corridor modeling will help identify the potential for unique issues that can occur with DDIs, such as demand starvation due to the increased efficiency of the two-phase signals.

37-3.11 Selection

Typically, several interchange types will be evaluated for potential application considering the following:

- compatibility with the highway system and functional classification of the intersecting highway;
- route continuity and uniformity with adjacent interchanges;
- level of service for each interchange element (e.g., freeway ramp terminal, ramp proper, ramp/crossroad terminal);
- operational and safety considerations (e.g., signing);
- availability of access control along the crossroad;
- road-user impacts (e.g., travel distance and time, convenience, comfort);
- driver expectancy;
- topography and geometric design;
- right-of-way impacts and availability, construction and maintenance costs, and potential for stage construction;
- accommodation of pedestrians and bicyclists on crossroad;
- environmental impacts; and
- potential growth of surrounding area.

In addition, consider the following, which will influence the selection of an interchange type:

1. Basic Types. A freeway interchange will be one of two basic types. A “systems” interchange will connect a freeway to a freeway; a “service” interchange will connect a freeway to a lesser facility.

2. Urban/Rural. In rural areas where interchanges occur relatively infrequently, the type selected is normally influenced by existing topography and environmental factors. In urban areas where restricted right-of-way and close spacing of interchanges are common, the type selection and design of the interchange may become more complex.

The operational characteristics of the crossroad and proximity of nearby interchanges must be considered when selecting and designing an urban interchange.

3. Capacity. The need for loop ramps or other free-flowing ramps may depend upon the capacity of the ramp termini to adequately accommodate the turning traffic. Conduct a capacity analysis to determine if the ramp termini will be adequate and to determine the appropriate number of approach lanes on the crossroad and ramps.

4. Movements. All interchanges should provide for all movements, even when the anticipated turning volume is low.

For certain projects it may be appropriate to evaluate alternative interchange design types by applying an Intersection Control Evaluation (ICE) analysis. ICE tools set up a performance-based framework in order to more objectively analyze alternatives while considering all users. Factors considered in ICE analyses include safety, traffic operations, non-motorized accommodations, environmental impacts, right-of-way, stakeholder and political considerations, and life-cycle costs. The ICE process can begin by assessing a wide range of alternate designs in a preliminary screening. This is followed by a secondary analysis for a short list of the best-performing alternatives. Those could, for example, be presented to project stakeholders leading to a preferred/selected design. The ICE process includes steps to define the issues (based on the project purpose and need), establish project objectives and constraints, screen and analyze alternatives for performance, and select one (or more) best-performing alternative(s). The FHWA has developed the CAP-X and SPICE tools for use by transportation agencies in performing ICE analyses. Contact the Bureau of Design and Environment when considering such an analysis for a project. Project design teams are in the end responsible for type selection and design based on the factors unique to their specific location and should use the tools that best allow them to make an effective project-specific interchange type selection.

HARD COPIES UNCONTROLLED

37-4 RAMP DESIGN

37-4.01 Ramp Types

The components of a ramp include the freeway ramp terminal, the ramp proper, and a free-flow or controlled ramp terminal at the crossroad. Although ramps have varying shapes, each can be classified into one or more of the types illustrated in Figure 37-4.A and discussed in the following sections.

37-4.01(a) Loop Ramps

There are two types of loop ramps:

1. Free-Flow. The free-flow loop, Figure 37-4.A(a), consists of compounded circular arcs which turn through approximately 270 degrees. The initial and final curves of the loop are tangent to the standard exit or entrance terminal or to a weaving section, depending upon the interchange type. The free-flow loop is a standard component of the cloverleaf interchange, the four-quadrant partial cloverleaf interchange, and the trumpet interchange. Free-flow loops are designed so that the central arc is a sharper radius than that of either the initial or final arcs, or the central arc is intermediate between the two. Motorists decelerate from the speed of the through highway over the initial portion of the ramp and accelerate uniformly over the final portion of the ramp.

   Avoid flatback loops or loop ramps where the central arc has a greater radius than either the initial or final arcs.

2. Controlled Terminal. Controlled terminal loops, Figure 37-4.A(b), are a component of the two-quadrant partial cloverleaf interchange. They are used most often with the standard entrance and exit terminals. Controlled terminals are provided at the intersections with the crossroad and permit both right- and left-turning movements. Wherever practical, design the angle of intersection for 90 degrees.

37-4.01(b) Diagonal Ramps

Diagonal ramps, Figure 37-4.A(c), are a component of the diamond interchange. Standard entrance and exit terminals are used on the major road, and controlled terminals are provided on the crossroad. The angle of intersection with the crossroad varies between 60 and 90 degrees; see Section 37-3.02(d).

37-4.01(c) Outer-Connector Ramps

Outer-connector ramps are in the same quadrant and to the outside of loop ramps; see Figure 37-4.A(d). They may have free-flow operation (e.g., at cloverleaf or trumpet interchanges) or have controlled operations (e.g., at partial cloverleaf interchanges).

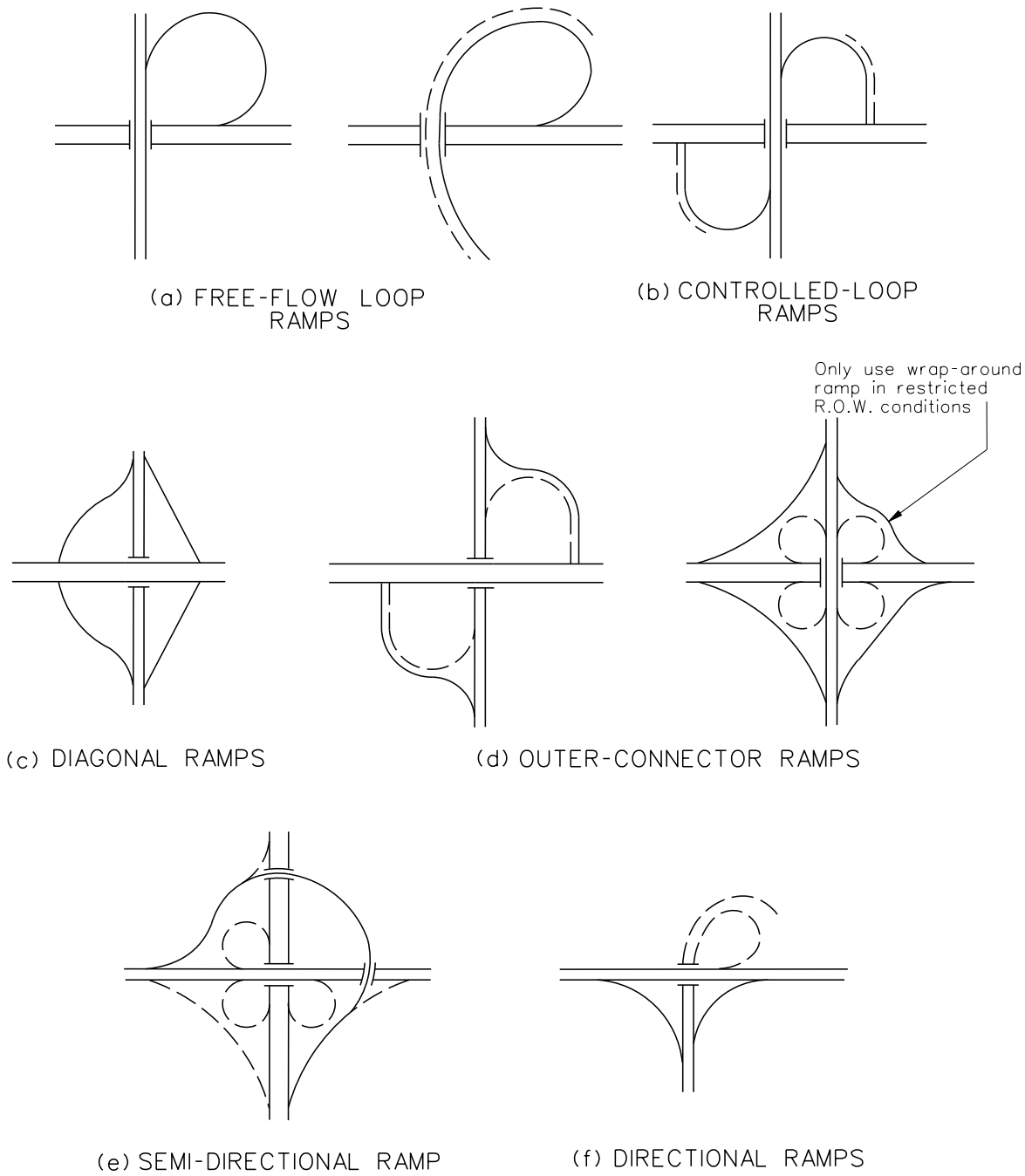

RAMP TYPES

Figure 37-4.A

HARD COPIES UNCONTROLLED

37-4.01(d) Semi-Directional Ramps

Semi-directional ramps are indirect in alignment, yet more direct than a loop ramp. These ramps are illustrated in Figure 37-4.A(e). Motorists making a left turn normally exit to the right and initially turn to the right, reversing direction before entering the intersecting highway. The outer connection of the trumpet interchange is also a semi-directional ramp.

37-4.01(e) Directional Ramps

Directional ramps do not deviate greatly from the intended direction of travel. These are illustrated in Figure 37-4.A(f) as an element of a trumpet interchange. They are also used to accommodate single lane, right-turning traffic on four-quadrant partial cloverleafs, semi-directional, and directional interchanges.

37-4.02 Collector-Distributor Roadways

37-4.02(a) Usage

A collector-distributor (C-D) roadway is an auxiliary roadway parallel to and separated from the main traveled way which serves to collect and distribute traffic from several access points. It provides greater capacity and permits higher operating speeds to be maintained on the main traveled way. C-D roadways may be provided at single interchanges, through two adjacent interchanges or, in urban areas, continuously through several interchanges. Figure 37-3.L illustrates a schematic of a C-D roadway within a full cloverleaf interchange.

Usually, interchanges designed with single exits are superior to those with two exits, especially if one exit is a loop ramp or the second exit is a loop ramp preceded by a loop entrance ramp. Whether used in conjunction with a full cloverleaf or with a partial cloverleaf interchange, the single-exit design may improve the operational efficiency of the entire interchange. C-D roadways use the single exit approach to improve the interchange operational characteristics. C-D roadways will:

- remove weaving maneuvers from the mainline and transfer them to the slower speed C-D roadways,
- provide high-speed single exits and entrances from and onto the mainline,
- satisfy driver expectancy by placing the exit before the grade separation structure,
- simplify signing and the driver decision-making process, and
- provide uniformity of exit patterns.

C-D roadways are most often warranted when traffic volumes (especially in weaving sections) are so high that the interchange cannot operate at an acceptable level of service. They also may be warranted where the speed relationship between weaving and non-weaving vehicles is significant.

37-4.02(b) Design

When designing C-D roadways, consider the following:

1. Design Speed. The design speed of a C-D roadway usually ranges from 40 to 55 mph (60 to 90 km/hr). Typically, use a design speed within 20 mph (30 km/hr) of the mainline design speed, but not exceeding 55 mph.

2. Lane Balance. Maintain lane balance at the exit and entrance points of the C-D roadways; see Section 37-2.03.

3. Width. C-D roadways may be one or two lanes, depending upon the traffic volumes and weaving conditions. C-D roadways are designed similar to ramps with traveled way widths of either 16 ft or 24 ft (4.9 m or 7.2 m).

4. Separations. The separation between the C-D roadway and mainline should be as wide as practical. Figure 37-4.B provides the minimum separation that should be provided with and without a median barrier.

5. Terminal Designs. Figure 37-4.C illustrates typical entrance terminal designs for C-D roadways. Figure 37-4.D illustrates typical exit terminal designs.

37-4.03 High-Speed Directional/Semi-Directional Roadways

High-speed directional or semi-directional roadways, like ramps, accommodate turning movements at interchange facilities, but they are distinguished from ramps in that they provide two-lane, one-way operations. These roadways are provided for large traffic movements that exceed the capacity of a one-lane ramp, for route continuity, or for improved traffic operations. For route continuity purposes, directional roadways may carry any route including expressways and freeways. These roadways are directional or semi-directional in alignment and generally have major divergence and convergence at their terminals. Design criteria for these roadways are:

1. Directional Roadways. The design speed of directional roadways, in rural areas may be 60 mph or 70 mph (100 km/hr or 110 km/hr). In urban areas, directional roadways may be designed for 50 mph, 55 mph, or 60 mph (80 km/hr, 90 km/hr, or 100 km/hr) depending on traffic volumes, right-of-way, motorist expectations, and importance of route. In all cases, the maximum superelevation rate is 6%. Shoulder widths are the same as the mainline roadway.

2. Semi-Directional Roadways. Desirably, use the criteria for directional roadways. However, use minimum design speeds, 55 mph (90 km/hr) in rural areas and 50 mph (80 km/hr) in urban areas. Where two-lane roadways are required for capacity or route continuity, the maximum superelevation rate is 6%. However, where a two-lane roadway is desirable because of the long design length of a single-lane ramp, a maximum superelevation rate of 8% may be used.

HARD COPIES UNCONTROLLED

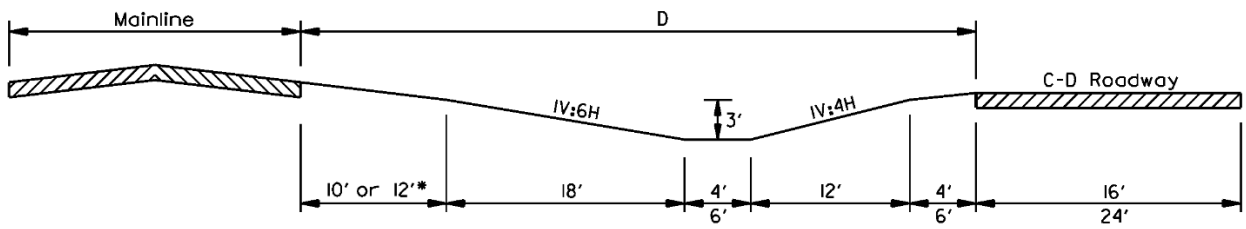

WITHOUT CONCRETE BARRIER

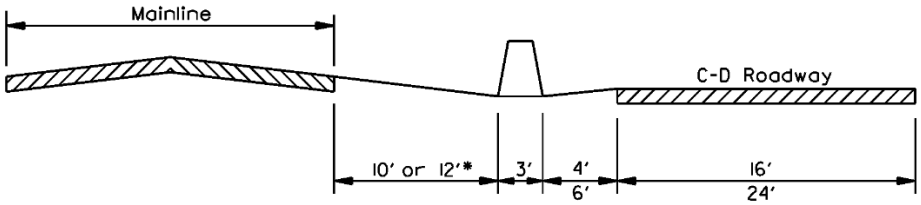

WITH CONCRETE BARRIER

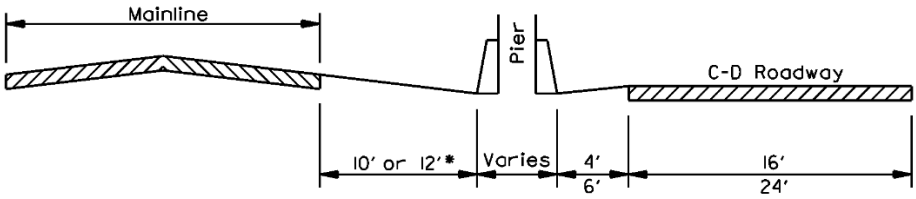

WITH PIER AND CONCRETE BARRIER

* 12 ft. paved shoulders should be considered where the directional distribution of trucks exceeds 250 DDHV.

SEPARATION WIDTH BETWEEN C-D ROADWAY AND MAINLINE
(US Customary)

Figure 37-4.B

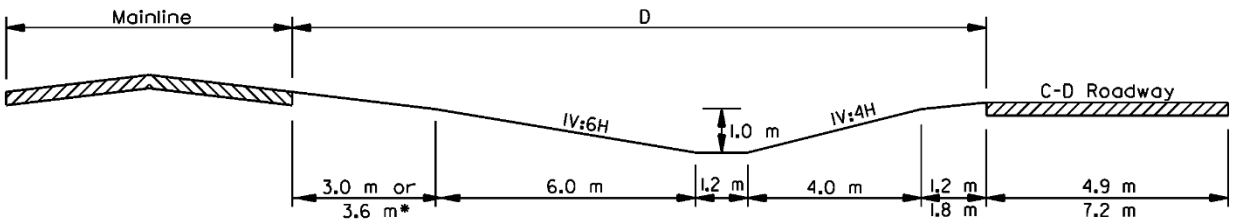

WITHOUT CONCRETE BARRIER

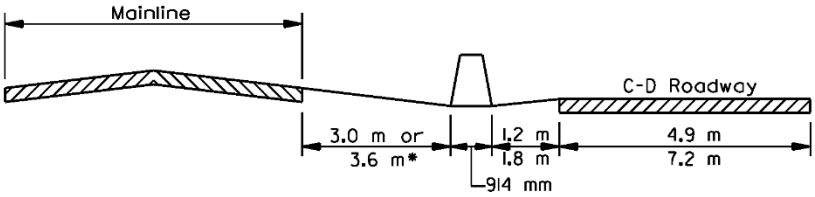

WITH CONCRETE BARRIER

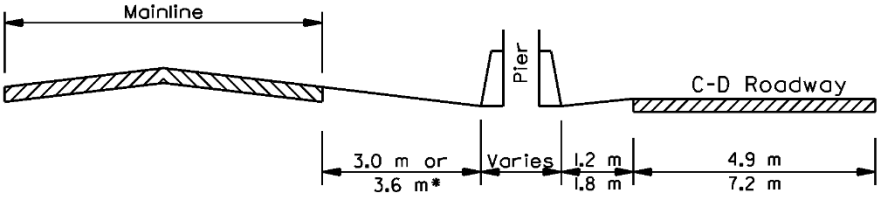

WITH PIER AND CONCRETE BARRIER

* 3.6 m paved shoulders should be considered where the directional distribution of trucks exceeds 250 DDHV.

SEPARATION WIDTH BETWEEN C-D ROADWAY AND MAINLINE (Metric)

Figure 37-4.B

HARD COPIES UNCONTROLLED

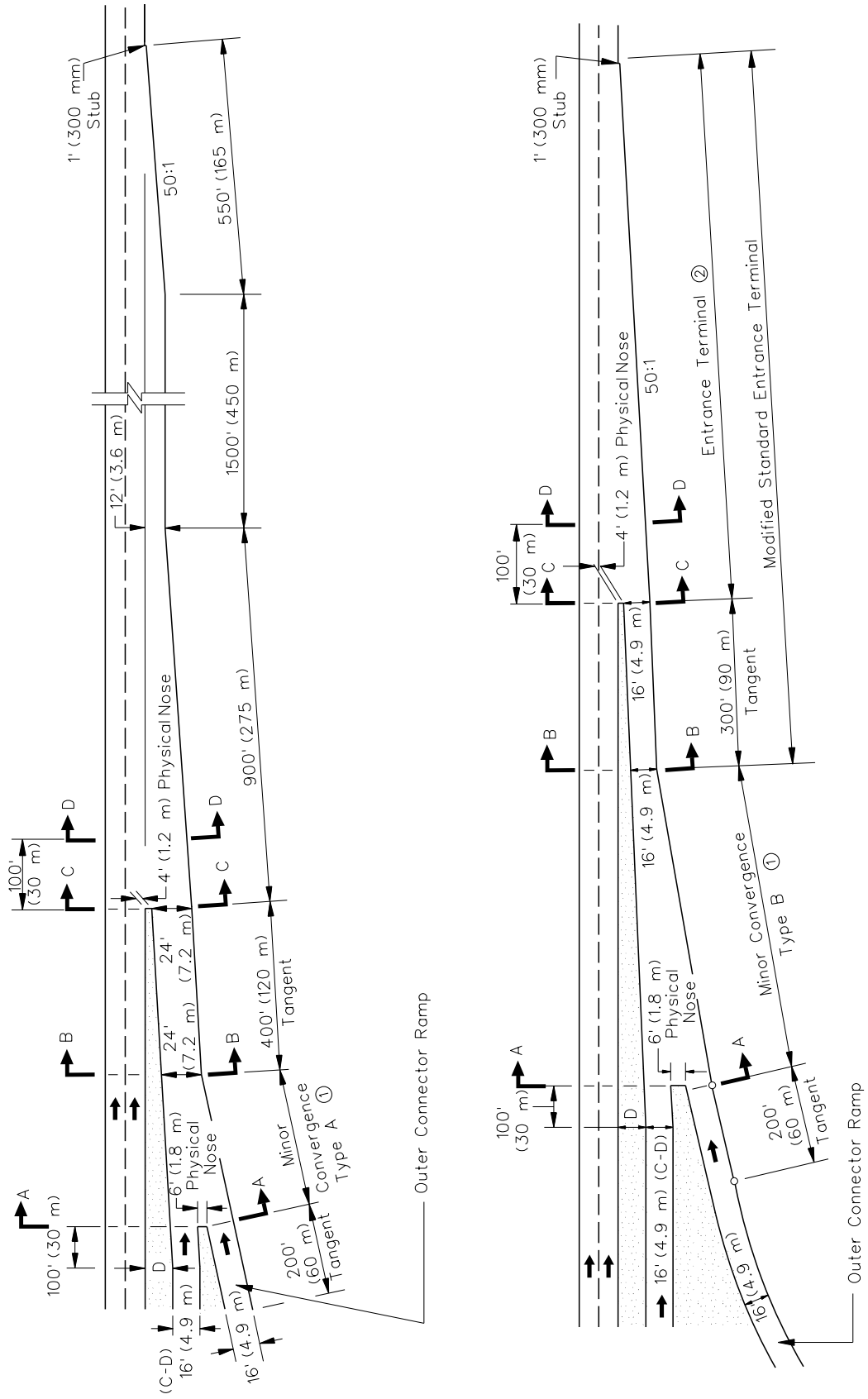

COLLECTOR-DISTRIBUTOR ENTRANCE TERMINAL DESIGNS

Figure 37-4.C
(1 of 2)

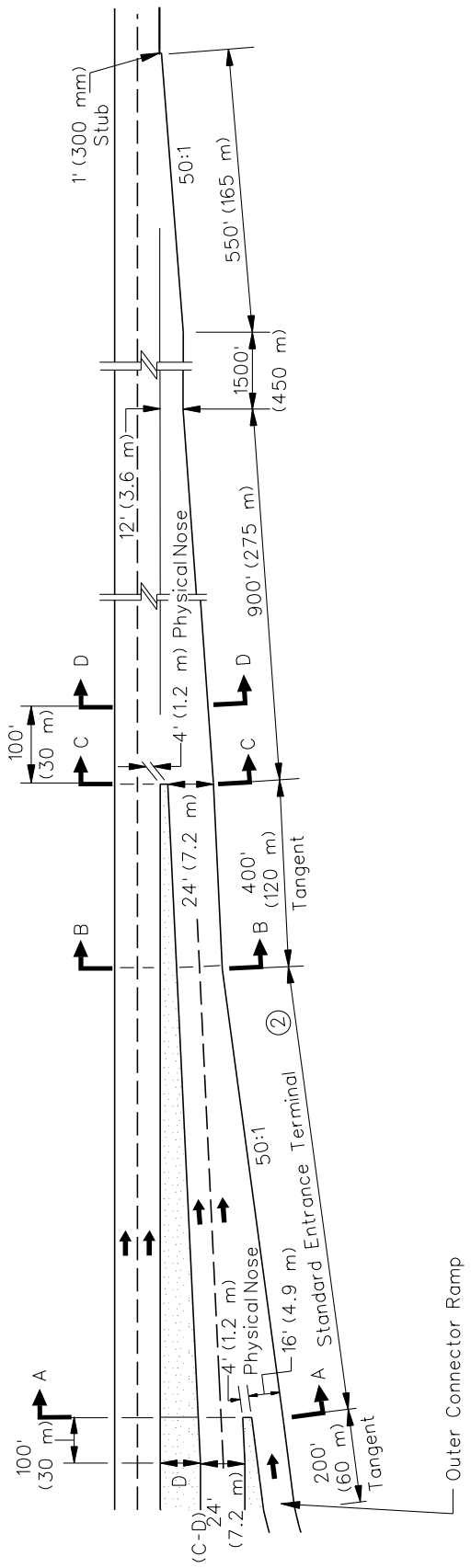

Notes:

1. *See Figure 37-6.T for minor convergence designs.*
2. *See Figure 37-6.K for standard entrance design.*
3. *D = median width, see Figure 37-4.B.*
4. *Develop cross sections A-A, B-B, C-C, and D-D during the preparation of the IDS.*

COLLECTOR-DISTRIBUTOR ENTRANCE TERMINAL DESIGNS

Figure 37-4.C
(2 of 2)

HARD COPIES UNCONTROLLED

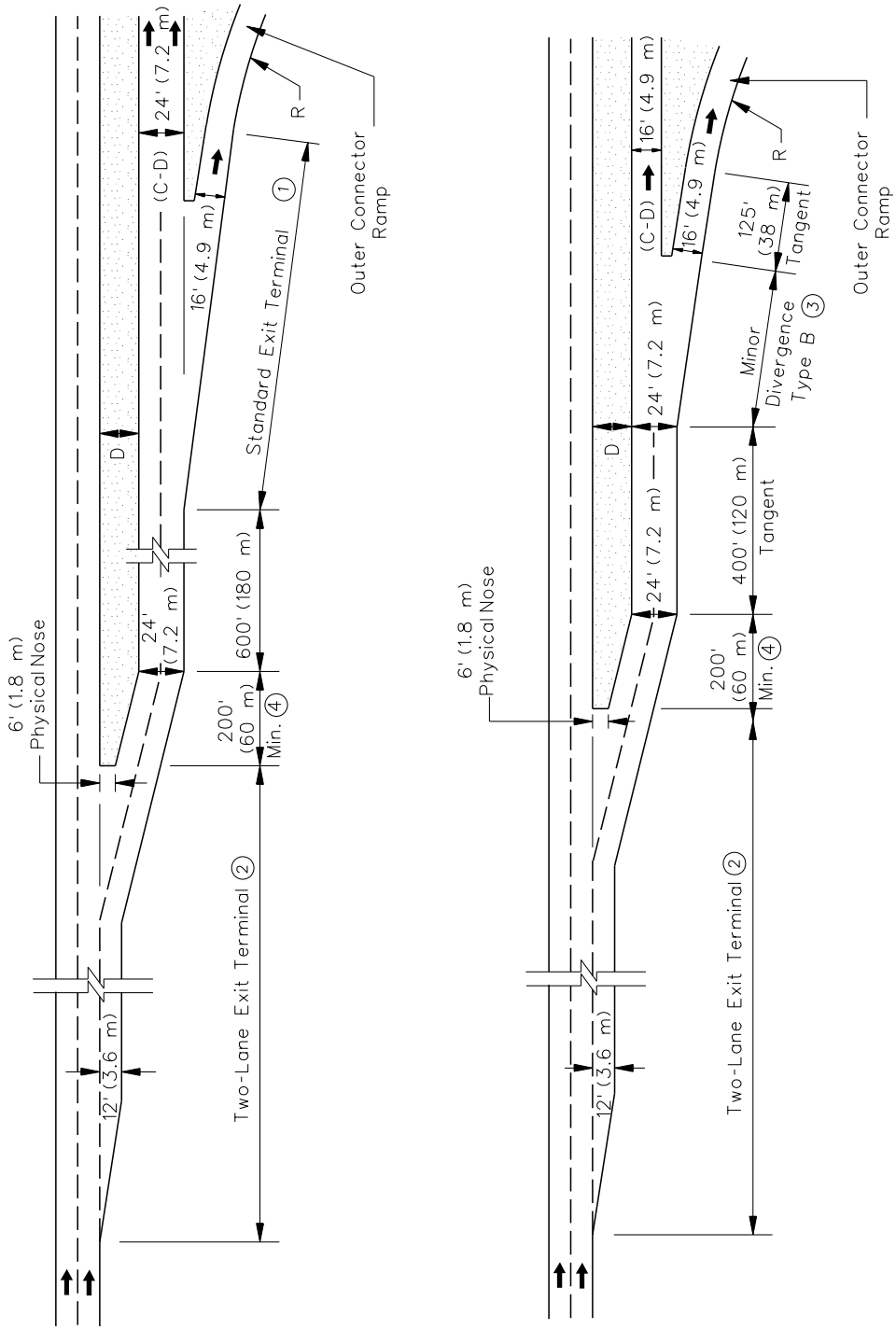

COLLECTOR-DISTRIBUTOR EXIT TERMINAL DESIGNS

Figure 37-4.D
(1 of 2)

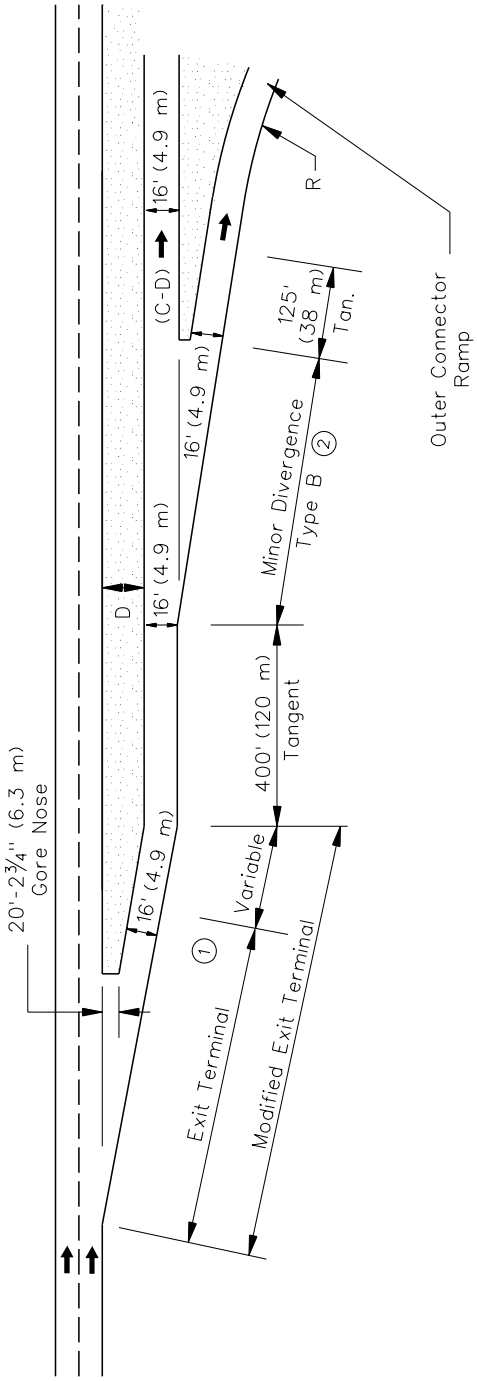

Notes:

1. *See Figure 37-6.A for standard exit design.*
2. *See Figure 37-6.C for two-lane exit design.*
3. *See Figure 37-6.R for minor divergence designs.*
4. *D = median width, see Figure 37-4.B. Note minimum lengths may increase median width " D."*
5. *Develop cross sections for all critical locations during the preparation of the IDS.*

COLLECTOR-DISTRIBUTOR EXIT TERMINAL DESIGNS

Figure 37-4.D
(2 of 2)

HARD COPIES UNCONTROLLED

37-4.04 Design Speed

Figure 37-4.E provides the AASHTO recommended ranges of ramp design speeds based on the design speed of the mainline. IDOT targets the middle range and the values apply to the entire ramp (i.e., ramp terminal and ramp proper). In addition to Figure 37-4.E, consider the following when selecting the ramp design speed:

1. Loop Ramps. Design speeds in the middle and high range are generally not attainable for loop ramps. The following apply to loop ramps:

   - For loop ramps on collector-distributor roadways or in restricted urban conditions, the minimum design speed for loops should be 25 mph (40 km/hr).
   - Where the truck ADT is greater than 15%, use a minimum design speed of 30 mph (50 km/hr) for the initial curve after the exit curve; see Figure 37-3.N.
   - For rural loop ramps, a 30 mph (50 km/hr) design speed is preferred.
   - Use a design speed of 35 mph (60 km/hr) for cloverleaf interchange loop ramps between freeways.

Mainline Design Speed	US Customary						Metric				
	50 mph	55 mph	60 mph	65 mph	70 mph	75 mph	80 km/hr	90 km/hr	100 km/hr	110 km/hr	120 km/hr
	Ramp Design Speed (mph)						Ramp Design Speed (km/hr)				
High Range	45	45	50	55	60	65	70	80	90	100	110
Middle Range	35	40	45	45	50	55	60	60	70	80	90
Low Range	25	30	30	30	35	40	40	50	50	60	70

RAMP DESIGN SPEEDS

Figure 37-4.E

2. Outer Connector Ramps. The design speed for the outer connector ramp of a rural cloverleaf interchange should be in the middle range however, where a wrap-around type ramp is used, a design speed 5 mph (10 km/hr) less than the middle range may be used for the center curve.

3. Semi-Directional Ramps. Use design speeds in the middle range for semi-directional ramps. In restricted urban conditions do not use a design speed less than 40 mph (60 km/hr).

4. Directional Ramps. These include both diagonal ramps at a diamond interchange and ramps at a directional interchange. The design speed shall be in the middle range.

5. Directional Roadways. Two-lane directional roadways within an interchange shall be designed in the middle range.

6. Controlled Terminals. If a ramp is terminated at an intersection with a stop or signal control, the design speeds in Figure 37-4.E are not applicable to a portion of the ramp near the intersection. The design speed on the ramp near the crossroad intersection is usually assumed to be 40 mph (60 km/hr) but can be a minimum of 25 mph (40 km/hr) in restricted areas.

7. Variable Speeds. The ramp design speed may vary based on the two design speeds of the intersecting roadways. Use a higher design speed on the portion of the ramp near the higher speed facility and a lower design speed near the lower speed facility. When using variable design speeds, the maximum speed differential between controlling design elements (e.g., horizontal curves, vertical curves) should not be greater than 10 mph (20 km/hr). The designer must ensure that sufficient deceleration distance is available between design elements with varying design speeds (e.g., two horizontal curves).

Figure 37-4.F presents geometric design criteria for interchange ramps based on the selected design speed (e.g., sight distance, horizontal alignment and vertical alignment). These are discussed in detail in the following sections.

37-4.05 Sight Distance

The designer should review the ramp cross-section, horizontal alignment, and vertical alignment to ensure that stopping sight distance is continuously provided along the interchange ramp. Because ramps are composed of curves of various radii and design speeds, sight distance requirements may vary over the length of the ramp. Figure 37-4.F provides a summary of the geometric criteria for ramps, including stopping sight distance.

HARD COPIES UNCONTROLLED

GEOMETRIC REQUIREMENTS								
Ramp Design Speed at R_1 (mph)		55	50	45	40	35	30	25
Stopping Sight Distance (ft)		495	425	360	305	250	200	155
HORIZONTAL ALIGNMENT								
Minimum Radius (ft) for R_1 for $e = e_{max}$ (Entrance and Exit Ramps)	8%	960	758	587	444	314	214	134
	6%	1060	833	643	485	340	231	144
Minimum Length of Arc (ft)		See Figure 37-4.H						
Superelevation Runoff Length for One Lane Ramp (ft) (adjusted for 16 ft width)	8%	272	255	235	220	205	195	185
	6%	204	190	180	165	155	145	135
VERTICAL ALIGNMENT								
Maximum Grades		+4% and -6%						
Crest Vertical Curves K-values		114	84	61	44	29	19	12
Sag Vertical Curves K-values		115	96	79	64	49	37	26

GENERAL NOTES:

- Where radii greater than R_1 are used, determine the ramp superelevation rate according to Section 32-3.
- e_{max} = 6% values are applicable to areas with snow and ice conditions and/or highly congested traffic operations.

SUMMARY OF ROADWAY DESIGN CRITERIA FOR INTERCHANGE RAMPS (US Customary)

Figure 37-4.F

GEOMETRIC REQUIREMENTS							
Ramp Design Speed at R_1 (km/hr)		90	80	70	60	50	40
Stopping Sight Distance (m)		160	130	105	85	65	50
HORIZONTAL ALIGNMENT							
Minimum Radius (m) for R_1 for $e = e_{max}$ (Entrance and Exit Ramps)	8%	304	229	168	113	73	41
	6%	336	252	184	123	79	43
Minimum Length of Arc (m)		See Figure 37-4.H					
Superelevation Runoff Length for One Lane Ramp (m) (adjusted for 4.9 m width)	8%	83	78	71	65	60	55
	6%	63	58	53	49	45	42
VERTICAL ALIGNMENT							
Maximum Grades		+4% and -6%					
Crest Vertical Curves K-values		39	26	17	11	7	4
Sag Vertical Curves K-values		38	30	23	17	12	8

GENERAL NOTES:

- Where radii greater than R_1 are used, determine the ramp superelevation rate according to Section 32-3.
- e_{max} = 6% values are applicable to areas with snow and ice conditions and/or highly congested traffic operations.

SUMMARY OF ROADWAY DESIGN CRITERIA FOR INTERCHANGE RAMPS (Metric)

Figure 37-4.F

HARD COPIES UNCONTROLLED

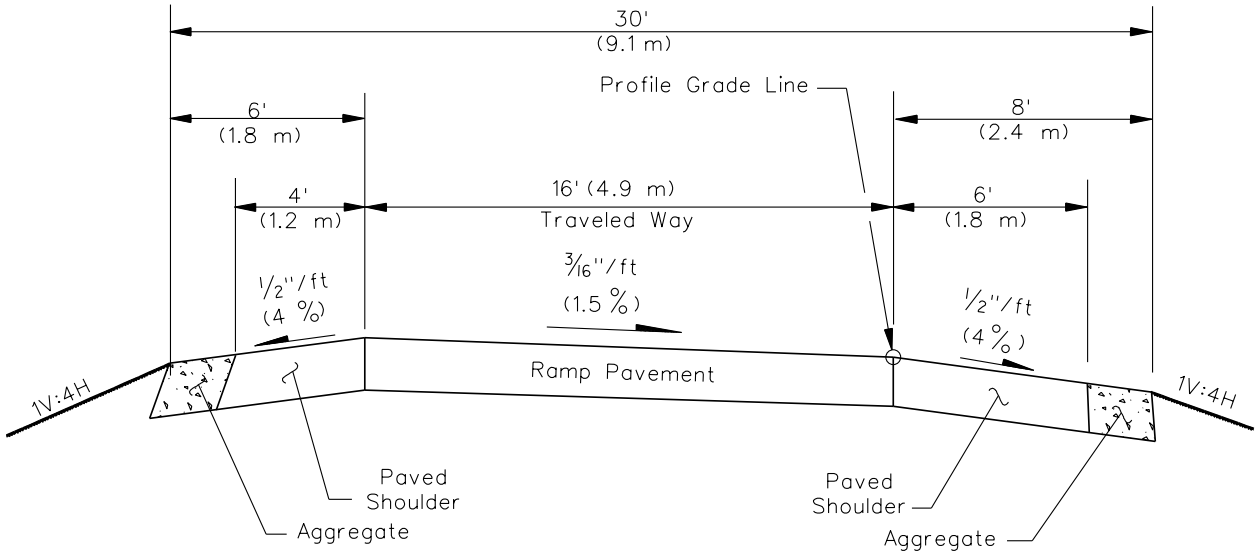

TANGENT SECTION

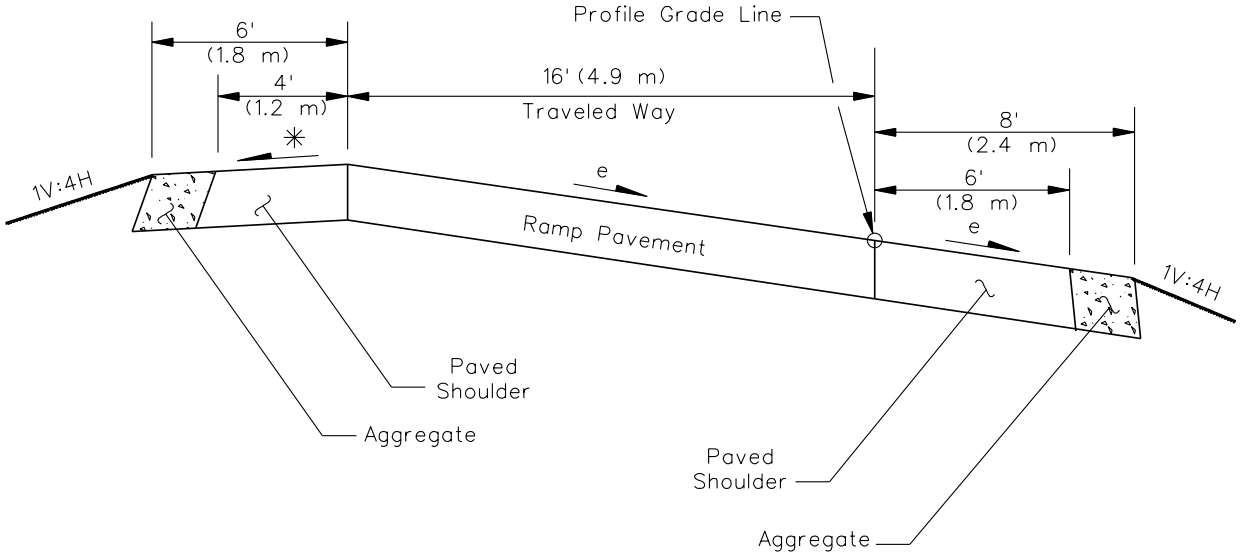

SUPERELEVATED SECTION

**See Section 32-3 for maximum shoulder break.*

TYPICAL RAMP CROSS SECTIONS

Figure 37-4.G

37-4.06 Cross Section Elements

Figure 37-4.G presents the typical cross section criteria for tangent and superelevated portions of ramps. The following also applies to the ramp cross section:

1. Width. The minimum width of a one-way, one-lane ramp is 30 ft (9.1 m). The 30 ft (9.1 m) width includes a 6 ft (1.8 m) left shoulder (4 ft (1.2 m) paved), an 8 ft (2.4 m) right shoulder (6 ft (1.8 m) paved), and a 16 ft (4.9 m) paved traveled way. This arrangement is illustrated in the ramp cross sections in Figure 37-4.G. For multilane directional roadways, the cross sectional width is the same as the freeway design (e.g., 24-ft (7.2-m) traveled way width plus shoulders); see Chapter 44.

2. Pavement Design. For pavement design information that is also applicable to ramps, see Chapter 54.

3. Cross Slope. For tangent sections, the 16 ft (4.9 m) traveled way is sloped unidirectionally at 3/16″/ft (1.5%) towards the right shoulder. Shoulder cross slopes, for both the paved and unpaved portions, are typically 1/2″/ft (4%). The left shoulder is typically sloped away from the traveled way. For all superelevated ramps, the ramp traveled way and shoulders are sloped as discussed for open roadways conditions in Section 32-3.

4. Curbs. If curb and gutter is required, place it on the outside edge of the full-width paved shoulders. See Chapters 34 and 38 for information on the use of curbs.

5. Bridges and Underpasses. Carry the full paved width of the ramp, including the paved shoulders over a bridge. See Chapters 38 and 39 when determining the clear ramp width for an underpass.

6. Side Slopes/Ditches. For the ramp proper, use a side slope of 1V:4H or flatter. Chapters 34 and 38 provide the applicable design information for side slopes and ditches.

7. Clear Zones. Measure the clear zone from the edge of the traveled way on both sides of the ramp using the criteria in Section 38-3.

8. Right-of-Way. The right-of-way adjacent to the ramp is fully access controlled and the right-of-way is fenced.

HARD COPIES UNCONTROLLED

37-4.07 Horizontal Alignment

37-4.07(a) Theoretical Basis

Establishing horizontal alignment criteria for any highway element requires a determination of the theoretical basis for the various alignment factors. These include the side-friction factor (f), the distribution method between side friction and superelevation, the relative longitudinal gradients, and the distribution of the superelevation runoff length between the tangent and horizontal curve. For horizontal alignment on the ramp proper, the theoretical basis will be open-roadway conditions as discussed in Chapter 32. In summary, this includes:

- relatively low side-friction factors (i.e., a relatively small level of driver discomfort);
- the use of AASHTO Method 5 to distribute side friction and superelevation;
- relatively flat longitudinal gradients for superelevation runoff lengths; and
- distributing 67% of the superelevation runoff length on the tangent and the remainder on the horizontal curve.

The following sections discuss the specific horizontal alignment criteria for ramps.

37-4.07(b) Design Controls

The following will apply to the horizontal alignment of ramps:

1. Minimum Curve Radii. Figure 37-4.F provides the minimum curve radii based on ramp design speed, open-roadway conditions, and e_{max}.

2. Superelevation Rates. For most areas, the maximum superelevation rate on the ramp is e_{max} = 8%. For areas with snow and ice conditions and/or areas with high congestion, the maximum superelevation rate is e_{max} = 6%. For two-lane directional roadways within an interchange, use an e_{max} = 6% throughout the State.

   Because of the typically restricted site conditions for interchanges (e.g., the need to minimize right-of-way), the majority of horizontal curves on ramps will be superelevated at e_{max}. Where practical, use curves flatter than R_{min}. For these curves, the design superelevation rate will be determined from the applicable e_{max} figure in Section 32-3 for open roadways.

3. Trucks. Where there are a significant number of trucks on loop ramps, the designer may need to consider how the design may increase the rollover potential for large trucks. To reduce this potential, consider using flatter curve radii on the second curve. Modified radii can be obtained by reducing the superelevation rates and/or lowering the side-friction factors. For additional guidance on modified truck friction factors, see the article in Transportation Research Record No. 1385 entitled “Interchange Ramp Geometrics — Alignment and Superelevation Design.”

4. Superelevation Runoff Lengths. Open-roadway conditions, as discussed in Section 32-3, apply to transitioning the ramp from its normal cross slope on tangent to the needed superelevation on curves. The relative longitudinal slopes in Figure 32-3.F apply to ramps. Based on these gradients, $e = e_{max}$, and a 16 ft (4.9 m) ramp traveled way, Figure 37-4.F presents the superelevation runoff lengths for horizontal curves on ramps.

5. Ramp Baseline. Typically, the right edge of the ramp traveled way is used for horizontal and vertical control, and the control point for the axis of rotation.

6. Shoulder Superelevation. The criteria presented in Section 32-3 for superelevating the high and low side of shoulders for open roadways will apply to superelevated curves on ramps.

7. Reverse Curves. Reverse curves may be required to:

   - meet restrictive right-of-way conditions,
   - provide for a better location of the intersection on the crossroad, and/or
   - provide a preferred angle of intersection with the crossroad.

   Design the reverse curves with a minimum tangent section consisting of a continuously rotating plane between the curves. This continuously rotating plane will determine the necessary distance between the PT and the succeeding PC and is based on the 67% superelevation runoff lengths for each curve. See Section 32-3 for more information on superelevating reverse curves.

8. Sight Distance. Section 32-4 presents the criteria for sight distance around horizontal curves based on the curve radii and design speed. These criteria also apply to curves on ramps.

9. Controlled Ramp Termini. Exit ramps may end at a controlled intersection — stop control or signal control. If horizontal curves on the ramps are near the intersection, a design speed for the curve should be selected which is appropriate for expected operations at the curve. See Section 36-1.05(b) for more information.

37-4.07(c) Length of Arc

Where compound arcs of decreasing radius are used on exit ramps, the arcs should have sufficient length to enable motorists to decelerate at a reasonable rate over the range of design speeds; see Figure 37-4.H. The radii of the flatter arc compared to the radii of the sharper arc should not exceed a ratio of 2:1 to prevent abruptness in operation and appearance.

Comparable radii and length controls may be used on entrance ramps with compound arcs of increasing radii. However, for entrance ramps, the 2:1 ratio of compound curves is not critical because the vehicle is accelerating into a curve with a larger radius or into a tangent section.

HARD COPIES UNCONTROLLED

US Customary							
Radius (ft)	**100**	**150**	**200**	**250**	**300**	**400**	**500 or more**
Minimum (ft)	40	50	60	80	100	120	140
Desirable (ft)	60	70	90	120	140	180	200
Metric							
Radius (m)	**30**	**50**	**60**	**75**	**100**	**125**	**150 or more**
Minimum (m)	12	15	20	25	30	35	45
Desirable (m)	20	20	30	35	45	55	60

Note: These lengths are applicable where the ramp curve is followed by a curve 1/2 the radius or preceded by a curve of double radius.

ARC LENGTHS FOR COMPOUND CURVES

Figure 37-4.H

37-4.08 Vertical Alignment

37-4.08(a) Grades

Values of limiting gradients are +4% to -6% regardless of the design speed but, for any one ramp, the selected gradient is dependent upon several factors. These include:

- Where steep grades are required, locate them within the center portion of the ramp.
- Locate freeway ramp terminals and approach areas near intersections on as flat a grade as practical; see Section 37-5 for grades near ramp/crossroad intersections and Section 37-6 for freeway ramp terminal grades.
- Ramp grades may affect the location of ramp termini. This may be a concern where the ramp intersects the crossroad at an angle of 70 degrees or less. Section 37-5.01 further discusses the location of ramp/crossroad intersections.

37-4.08(b) Vertical Curvature

Design vertical curves on ramps to meet the stopping sight distance criteria based on the ramp design as presented in Chapter 33. Figure 37-4.F provides the K-values for both crest and sag vertical curves. The ramp profile often assumes the shape of the letter S with a sag vertical curve at one end and a crest vertical curve at the other. In addition, design the vertical curvature adjacent to the standard exit and entrance terminals using a design speed of 50 mph (80 km/hr) or greater.

37-4.08(c) Cross Sections Between Adjacent Ramps

Where the horizontal alignment of a ramp is designed to be parallel to an adjacent ramp (e.g., parclo, cloverleaf, trumpet interchanges), first establish the profile of the loop ramp and then set the profile of the outer ramp to be approximately parallel to the inner-loop ramp profile. This is accomplished by calculating the left-edge elevations of the loop ramp and matching those elevations for the left-edge elevations of the outer ramp. To ensure the median edges between the two ramps are approximately level, develop a typical cross section during the preparation of the IDS.

37-4.09 Roadside Safety

The criteria in Chapter 38 (e.g., clear zones, barrier warrants, length of need) will apply to the roadside safety design of interchange ramps.

HARD COPIES UNCONTROLLED

37-5 RAMP/CROSSROAD INTERSECTIONS

37-5.01 General Design Criteria

At diamond and partial cloverleaf interchanges, the ramp will terminate or begin at a controlled intersection on the crossroad, either with a stop sign or traffic signal. In general, the intersection should be designed as described in Chapter 36. Consider the following in the design of ramp/crossroad intersections:

1. Length of Left-Turn Lanes. For diamond interchanges, typically the minimum distance between ramp/crossroad intersections is set by the length of overlapping left-turn lanes. Note that in rural areas, the minimum design speed for determining the length of left-turn lanes on the crossroad is 55 mph (90 km/hr). Left-turn lanes are usually designed with straight-line tapers when the crossroad goes over the freeway and with reverse curves when the crossroad goes underneath the freeway; see Figure 37-5.A. For compressed diamond interchanges, the length of the left-turn lanes will be determined based on left-turn storage requirements, see Section 36-3.02 and Figure 37-5.B. The left-turn control radii into the ramps are set at the ends of the left-turn lanes. This also determines the location of the ramp baselines.

2. Turn Lanes on Ramps. Exclusive turn lanes are often required at the end of an exit ramp. Chapter 36 provides information on the design of turn lanes at intersections, which are also applicable for ramps.

3. Signalization. Where queuing at one intersection is long enough to effect operations at another, the two intersections may need a larger separation, interconnected signals, or a six-phase overlap signal design.

4. Ramp Grades. Where the exit and entrance ramps intersect with the crossroad, design the first 150 ft to 200 ft (45 m to 60 m) of the ramp with a profile grade of 1.5% to 2%.

5. Crossroad Grades. Design the crossroad grades for a maximum of 2% through the ramp/ crossroad intersection.

6. Capacity. Ensure that sufficient capacity and storage for the ramp/crossroad intersection is available. This may require adding lanes at the intersection or on the ramp proper. The analysis must also consider the operational impacts of the traffic characteristics in either direction on the crossroad.

7. Sight Distance. Section 36-6 discusses the criteria for intersection sight distance. These criteria also apply to the ramp/crossroad intersection. Give special attention to the location of the bridge piers, abutments, sidewalks, bridge railing, roadside barrier, etc.; these elements may present major sight distance obstacles. The bridge obstruction and the required intersection sight distance may result in the relocation of the ramp/crossroad intersection further from the structure. In addition, the crest vertical curve on the crossroad may need to be lengthened to provide adequate sight distance in the vertical plane.

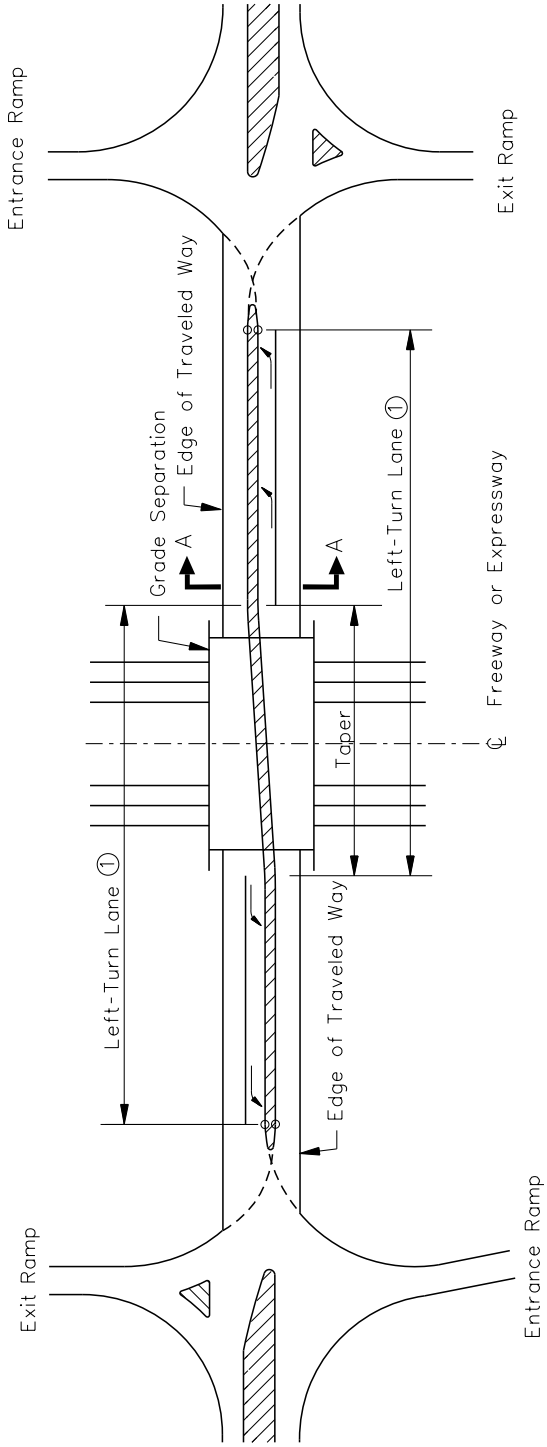

Notes:

1. *Determine the left-turn length on the crossroad using Section 36-3.02 and by assuming the distance needed for a stop condition.*
2. *Set the location of left-turn control radii to and from the crossroad at the same crossroad station.*
3. *See Figure 37-5.C for Section A-A.*

LEFT-TURN LANES ON CROSSROADS
(Diamond Interchanges)

Figure 37-5.A

HARD COPIES UNCONTROLLED

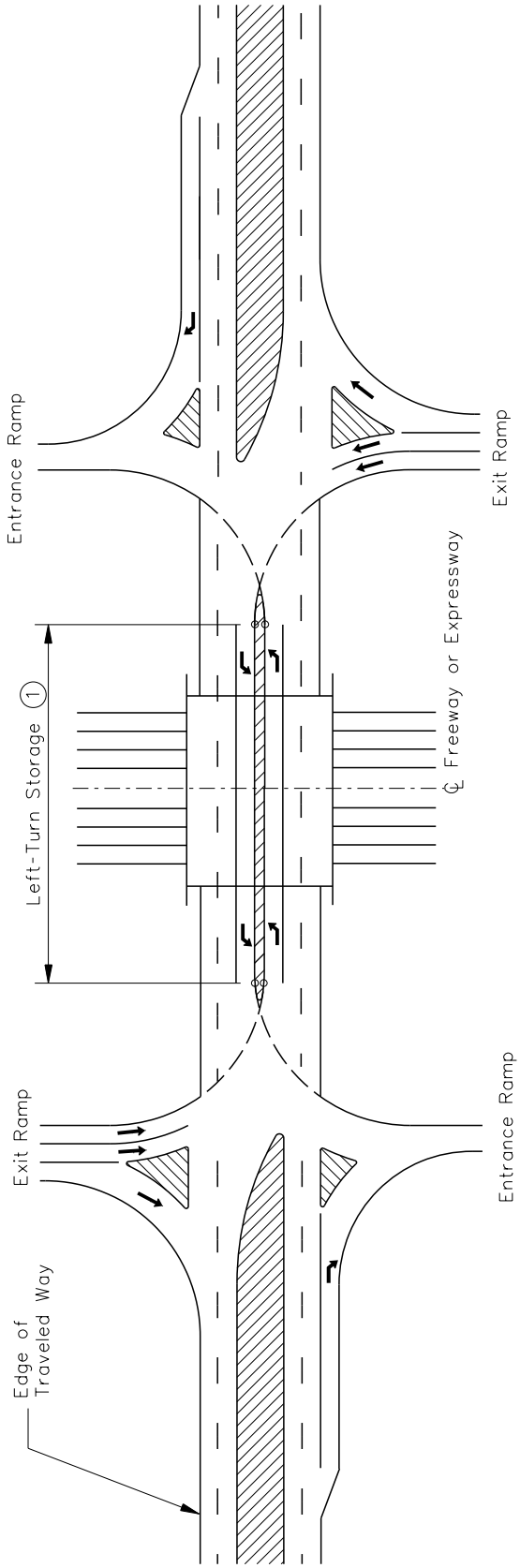

Notes:

1. *Determine the left-turn length on the crossroad using Section 36-3.02. For this design, the storage requirements will govern.*
2. *Set the location of left-turn control radii to and from the crossroad at the same crossroad station.*
3. *For new construction, use a 30 ft (9.0 m) minimum median width on the crossroad.*

LEFT-TURN LANES ON CROSSROADS
(Compressed Diamond Interchange)

Figure 37-5.B

8. Wrong-Way Movements. Wrong-way movements may originate at the ramp/crossroad intersection onto an exit ramp. To minimize the probability of these movements, provide a raised-curb median on the crossroad and sign the ramp according to the *ILMUTCD*.

9. Crossroad Cross Section. For safety and capacity, the crossroad through an interchange should be as wide as practical. The minimum cross section is an 18 ft (5.5 m) raised-curb median separating two 14 ft (4.2 m) lanes and 8 ft (2.4 m) outside shoulders. See Figure 37-5.C and Section 37-2.14 for additional information on the crossroad dimensions.

10. Design Vehicle. Radius returns and left-turn control radii for ramp/crossroad intersections should be designed using a WB-67 (WB-20) design vehicle; see Section 36-1.08.

11. Design Users. Where present and a permitted user of the crossroad, pedestrians and bicyclists should be treated as design users of the facility and given the same consideration as the design vehicle.

12. Corner Islands. The approach angle for right-turning vehicles is critical in the design of new corner islands or the modification of existing corner islands. If designed without the approach angle in mind, corner island design may impose challenges to the motorist regarding excessive head-turn and reduced sight distance. These challenges in the driving task are further amplified at intersection approaches on heavy skew angles. Figure 36-2.F depicts two options for a standard corner island design that will minimize potentially adverse operating characteristics. In the design of a corner island, seek to meet or approach a head-turn angle goal of 115 degrees for the line of sight as shown for drivers at the stop bar. See Section 36-2.02 for more information when designing or modifying corner islands at ramp/crossroad intersections.

13. Stop Bar Locations. See the *Illinois Supplement to the Manual on Uniform Traffic Control Devices (ILMUTCD)* regarding stop bar placement at intersections. On multilane approaches or approaches with corner islands, care should be taken in design to ensure the proposed stop bar placement of one lane does not create a line of sight restriction for the adjacent stopping maneuver. See Section 36-2.02(a) and (c) for more information on stop bar placement when using a corner island.

37-5.02 Typical Intersection Designs

37-5.02(a) Diamond Interchange

Typical ramp/crossroad intersections at a diamond interchange are shown in Figures 37-5.D, 37-5.E, 37-5.F, and 37-5.G. The appropriate radius returns, based on the WB-67 (WB-20) design vehicle, are used to delineate the right-turning paths for the corner island design. For left turns from an exit ramp onto a 14 ft (4.2 m) traveled way, offset the median nose as shown in Figure 37-5.H.

HARD COPIES UNCONTROLLED

37-5.02(b) Two-Quadrant Partial Cloverleaf Interchange

The ramp/crossroad intersections with a two-quadrant partial cloverleaf interchange are similar in design to a channelized “T” intersection; see Figure 37-5.I. To discourage wrong-way movements into the exit ramp, use a maximum left-turn control radius of 80 ft (24 m) from the crossroad into the entrance ramp and a 100 ft (30 m) left-turn control radius from the exit ramp onto the crossroad.

Figure 37-5.J illustrates a typical median design on the crossroad for a parclo type interchange.

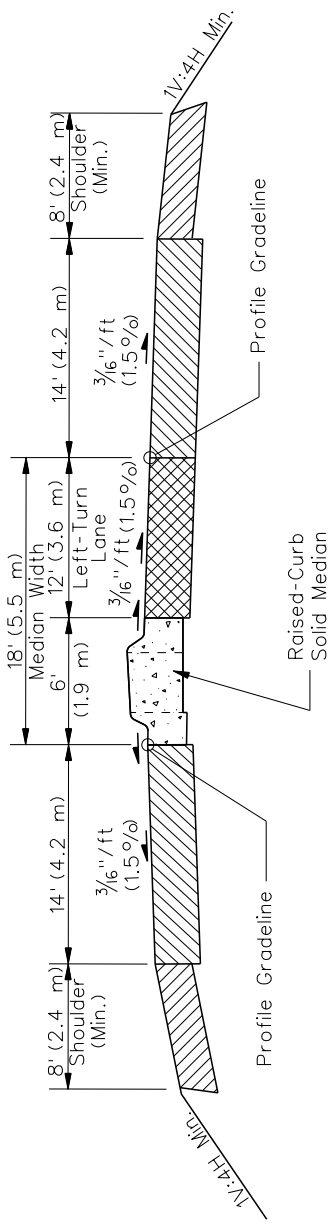

MINIMUM CROSS SECTION

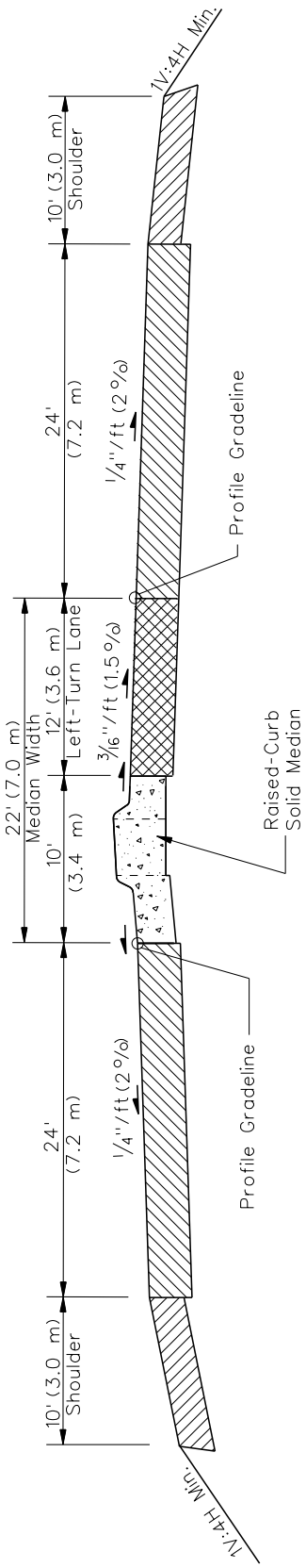

MULTILANE CROSS SECTION

Notes:

1. *See Figure 37-5.A for location of Section A-A.*
2. *See Section 34-2.04(c) for curb type determination.*

TYPICAL CROSS SECTIONS FOR AN INTERCHANGE CROSSROAD
(Left-Turn Bay at Section A-A)

Figure 37-5.C

HARD COPIES UNCONTROLLED

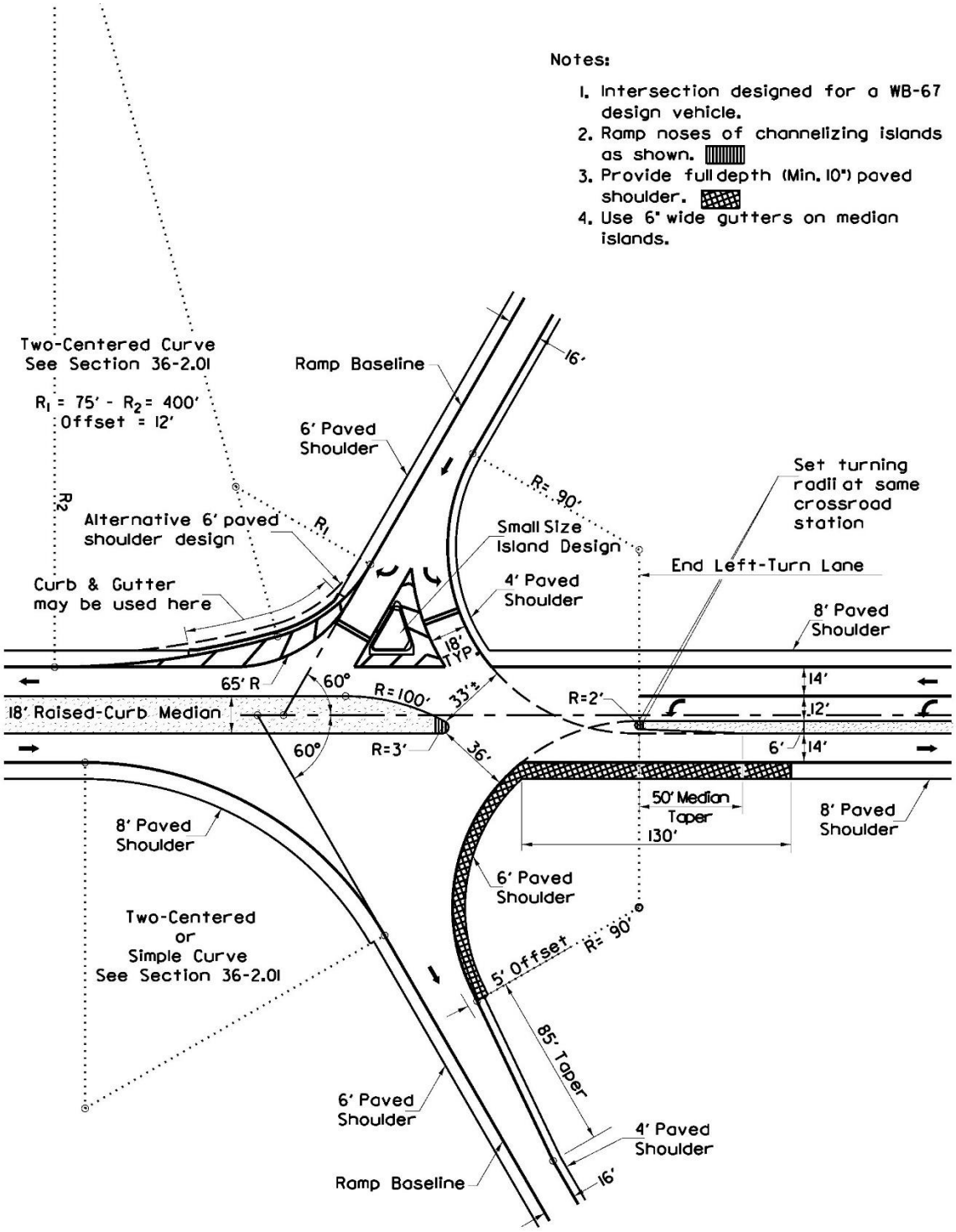

TYPICAL RAMP/CROSSROAD INTERSECTION — DIAMOND INTERCHANGE
(60 Degrees on Exit and 60 Degrees on Entrance)
(US Customary)

Figure 37-5.D

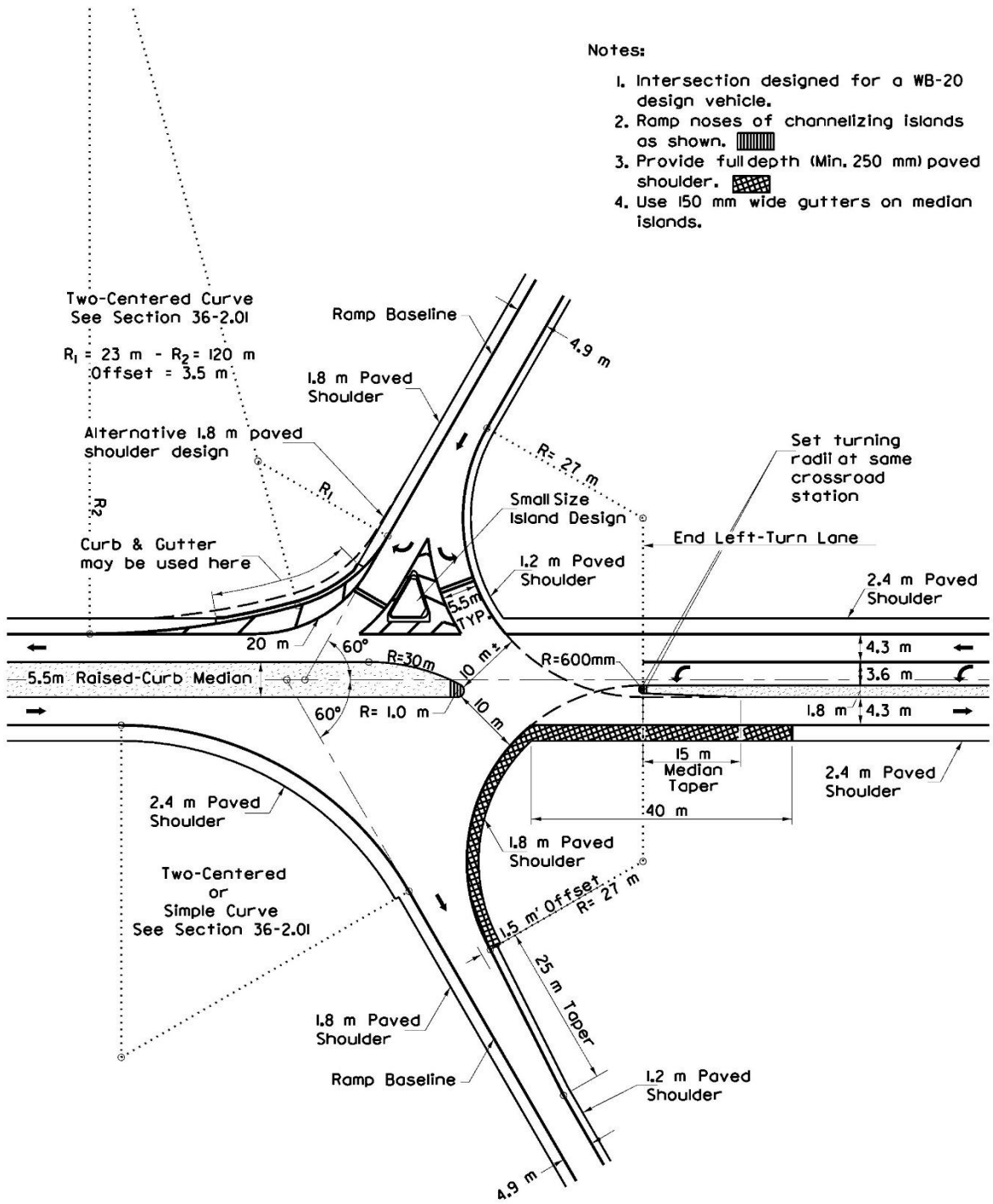

TYPICAL RAMP/CROSSROAD INTERSECTION — DIAMOND INTERCHANGE
(60 Degrees on Exit and 60 Degrees on Entrance)
(Metric)

Figure 37-5.D

HARD COPIES UNCONTROLLED

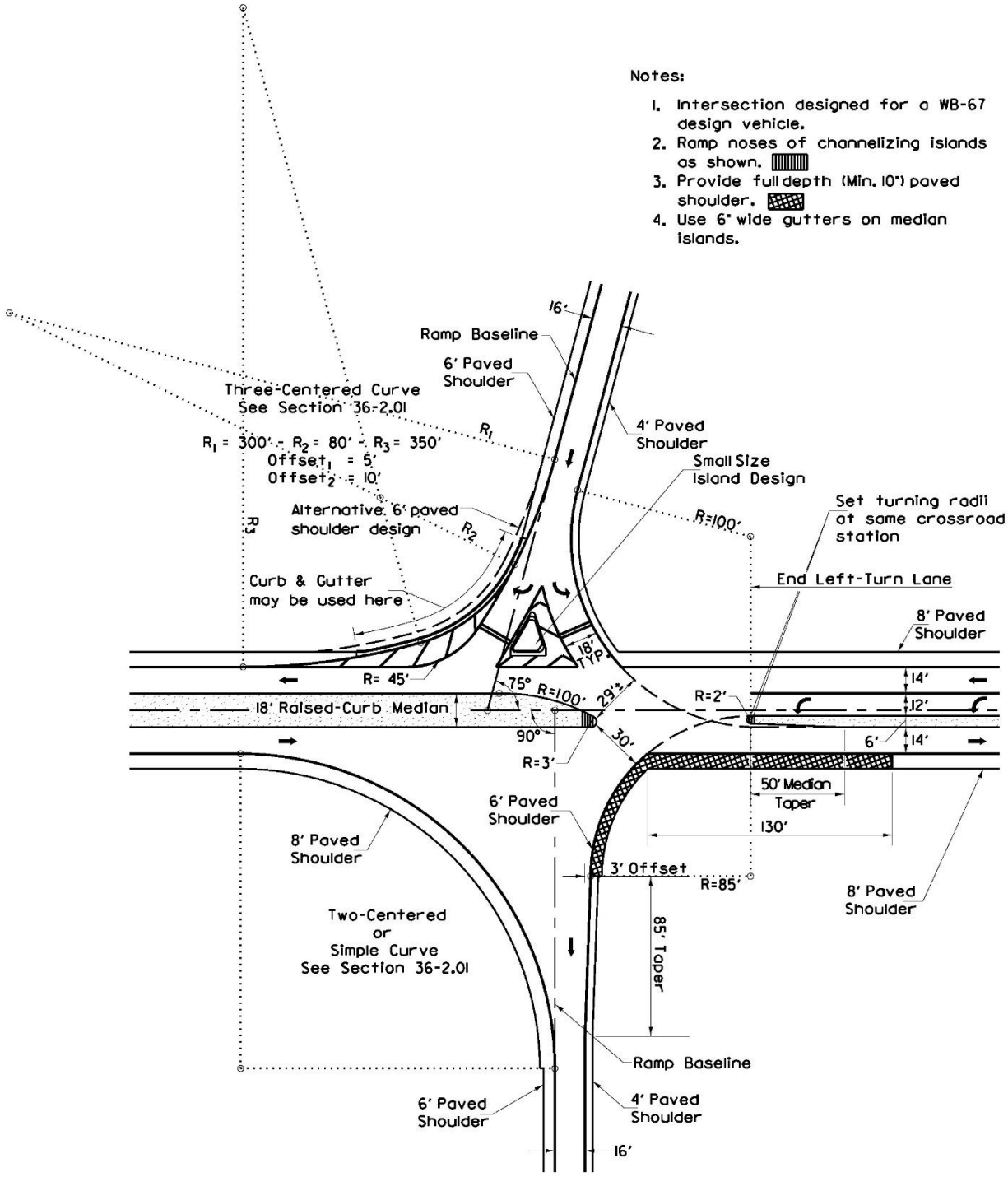

TYPICAL RAMP/CROSSROAD INTERSECTION — DIAMOND INTERCHANGE
(75 Degrees on Exit and 90 Degrees on Entrance)
(US Customary)

Figure 37-5.E

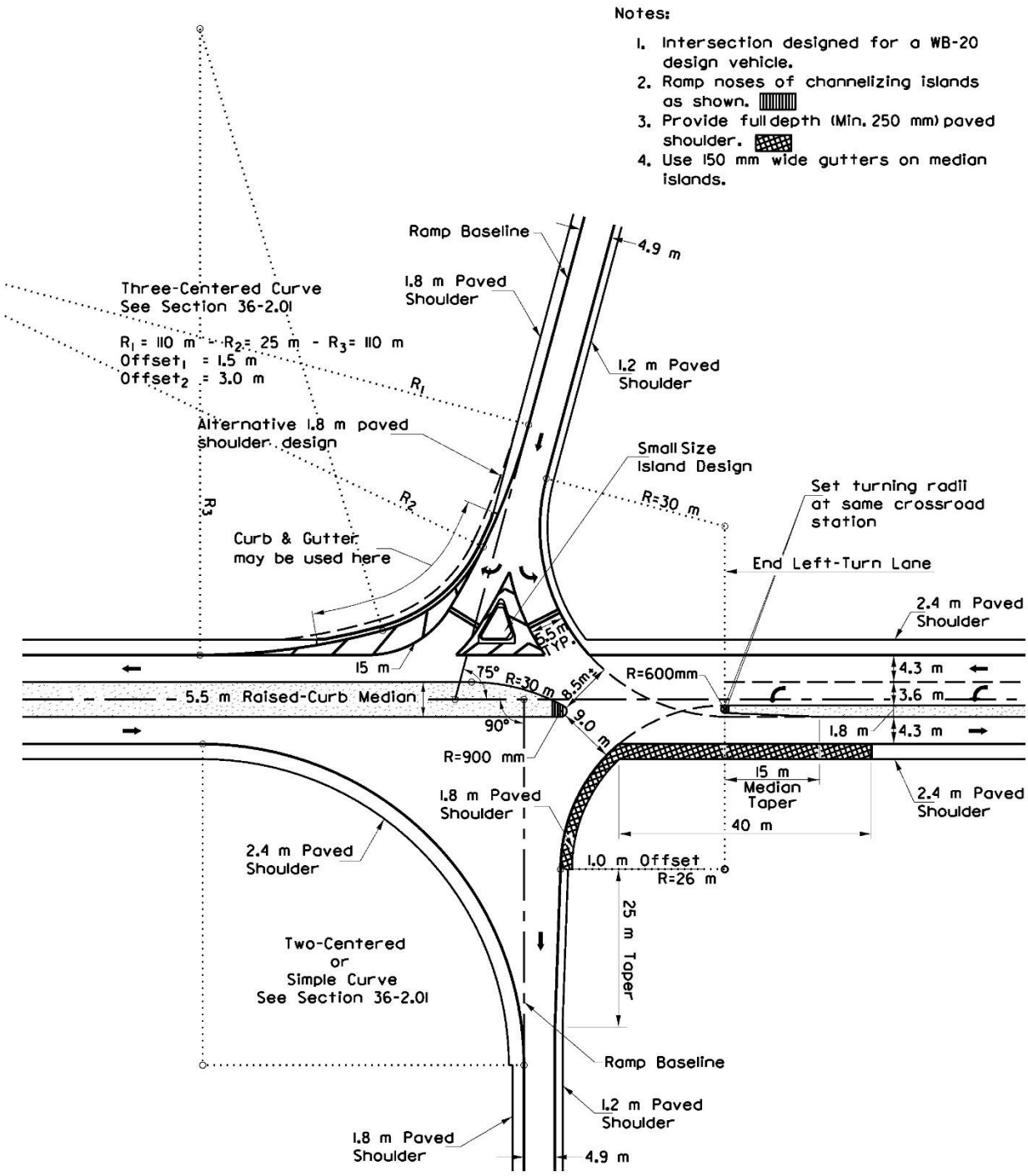

TYPICAL RAMP/CROSSROAD INTERSECTION — DIAMOND INTERCHANGE
(75 Degrees on Exit and 90 Degrees on Entrance)
(Metric)

Figure 37-5.E

HARD COPIES UNCONTROLLED

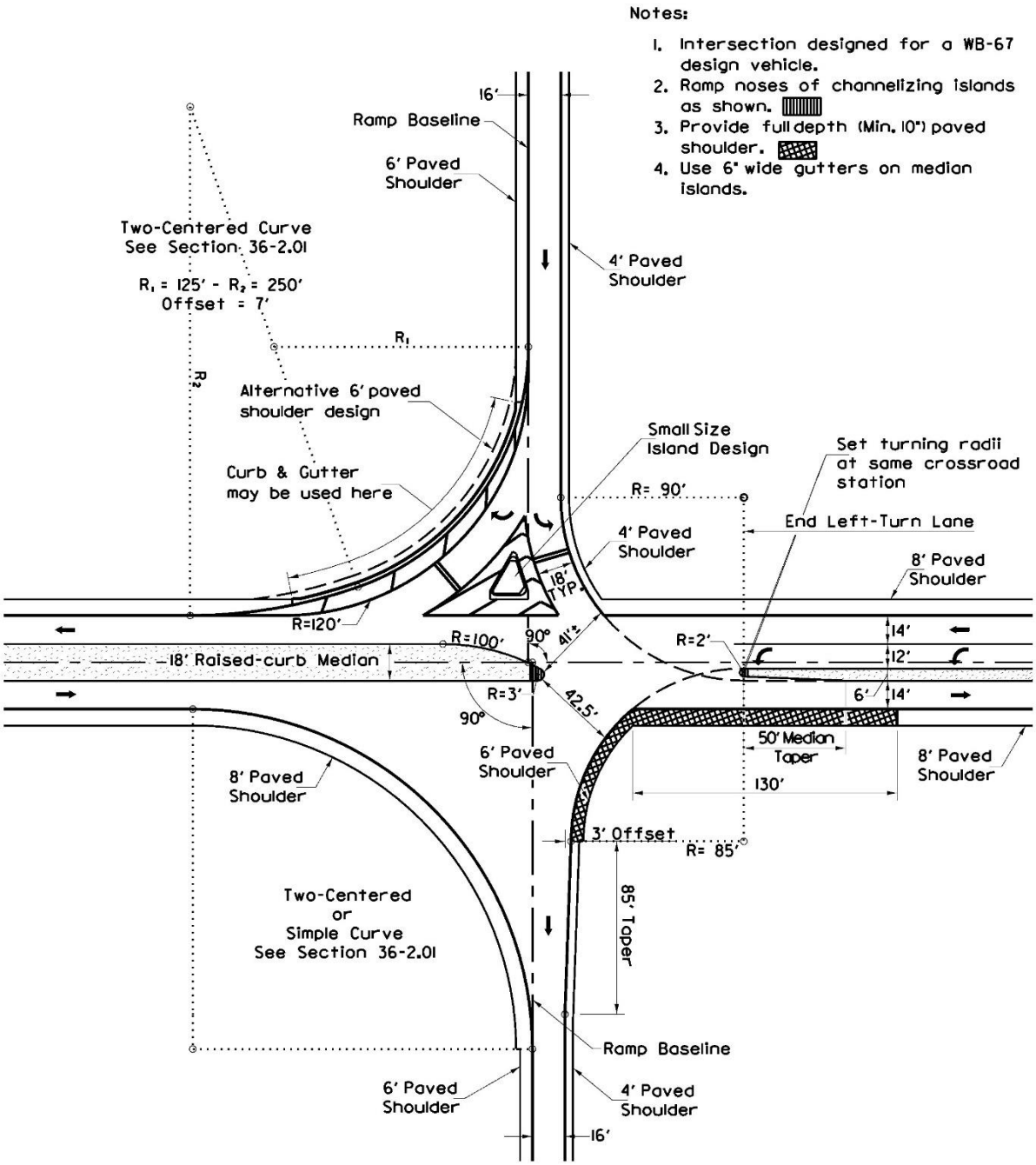

TYPICAL RAMP/CROSSROAD INTERSECTION — DIAMOND INTERCHANGE
(90 Degrees on Exit and 90 Degrees on Entrance)
(US Customary)

Figure 37-5.F

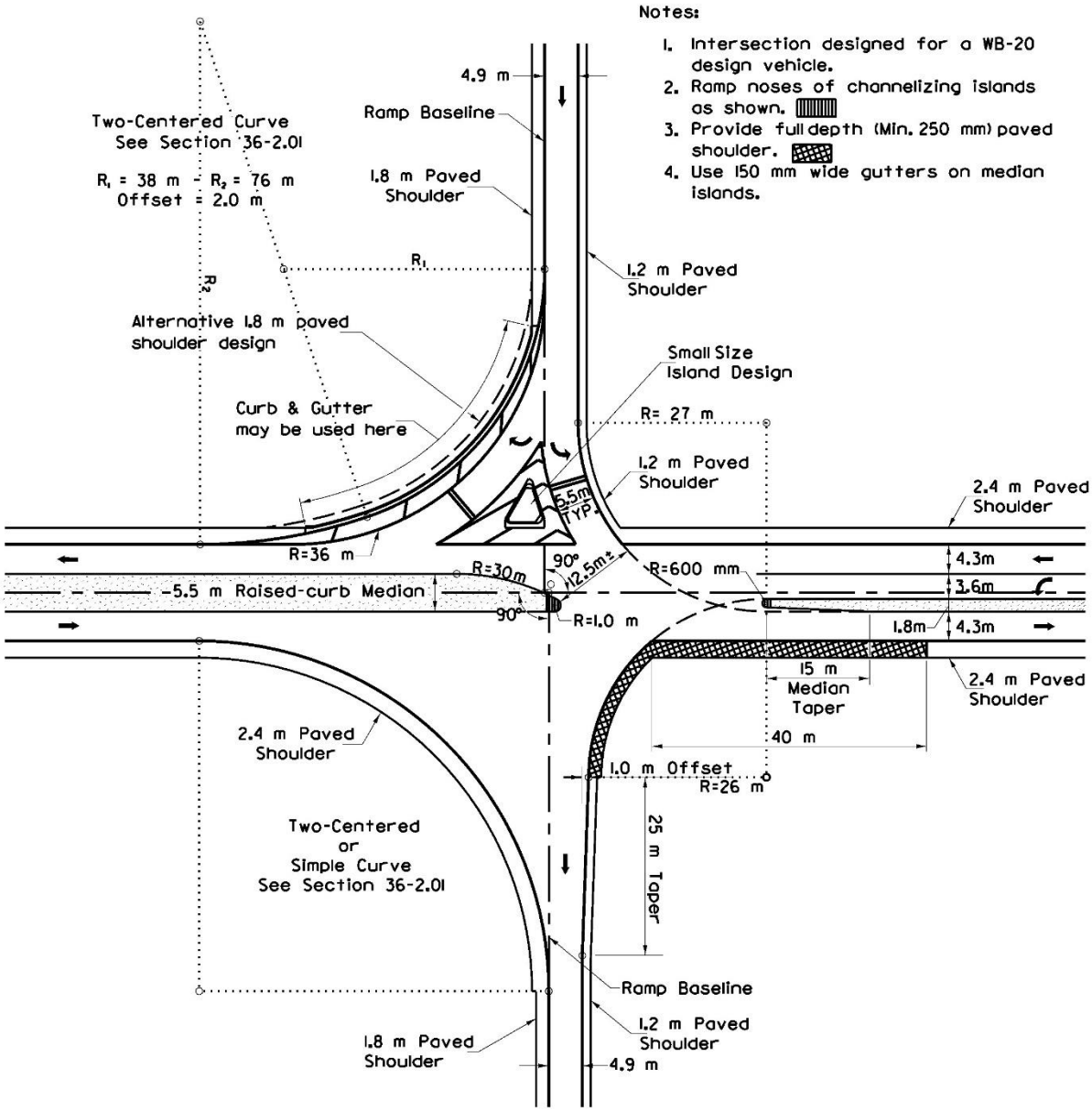

TYPICAL RAMP/CROSSROAD INTERSECTION — DIAMOND INTERCHANGE
(90 Degrees on Exit and 90 Degrees on Entrance)
(Metric)

Figure 37-5.F

HARD COPIES UNCONTROLLED

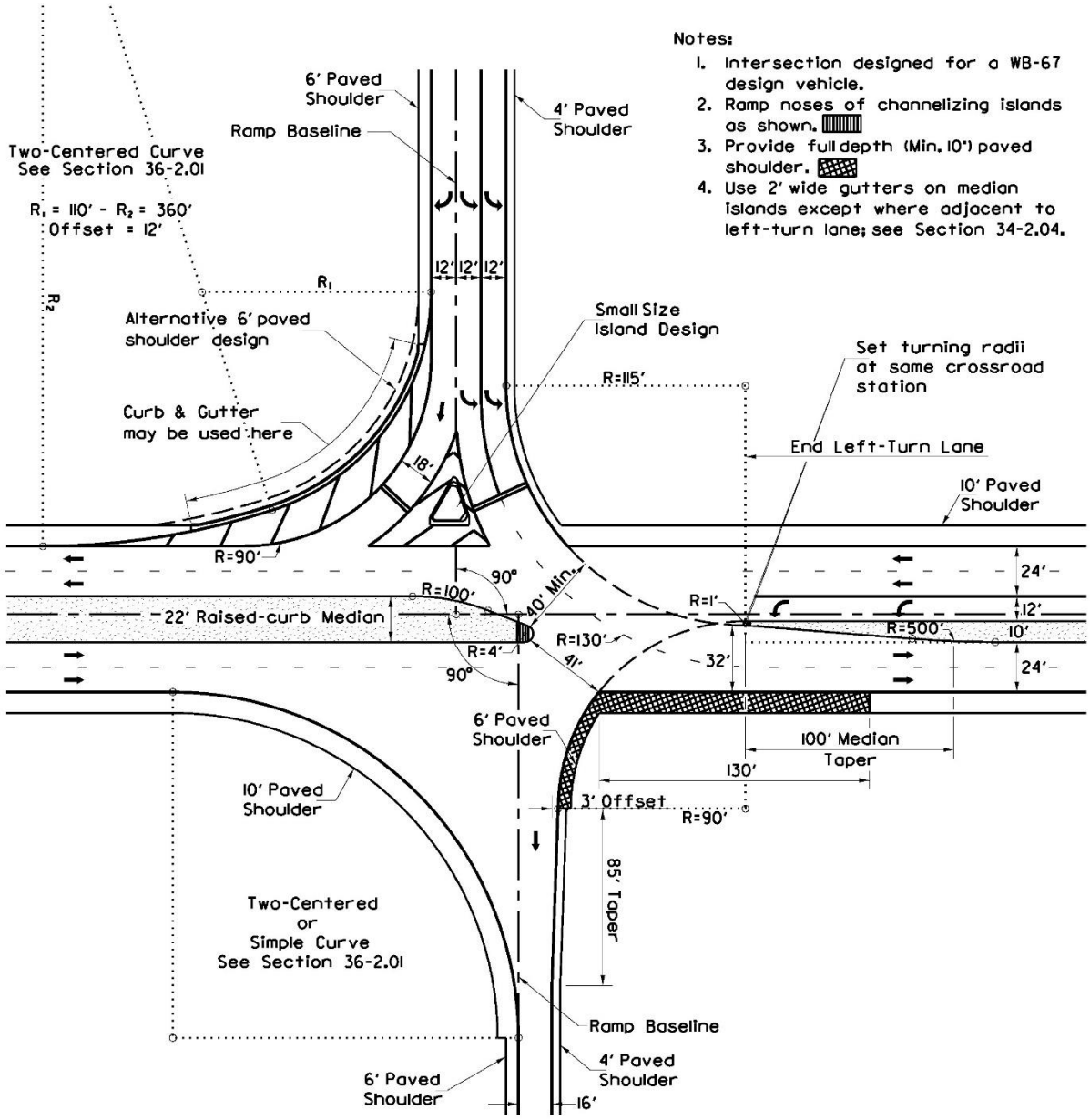

TYPICAL RAMP/CROSSROAD INTERSECTION — DIAMOND INTERCHANGE
(90 Degrees on Entrance and Exit and Dual Left Turns on Exit Ramp)
(US Customary)

Figure 37-5.G

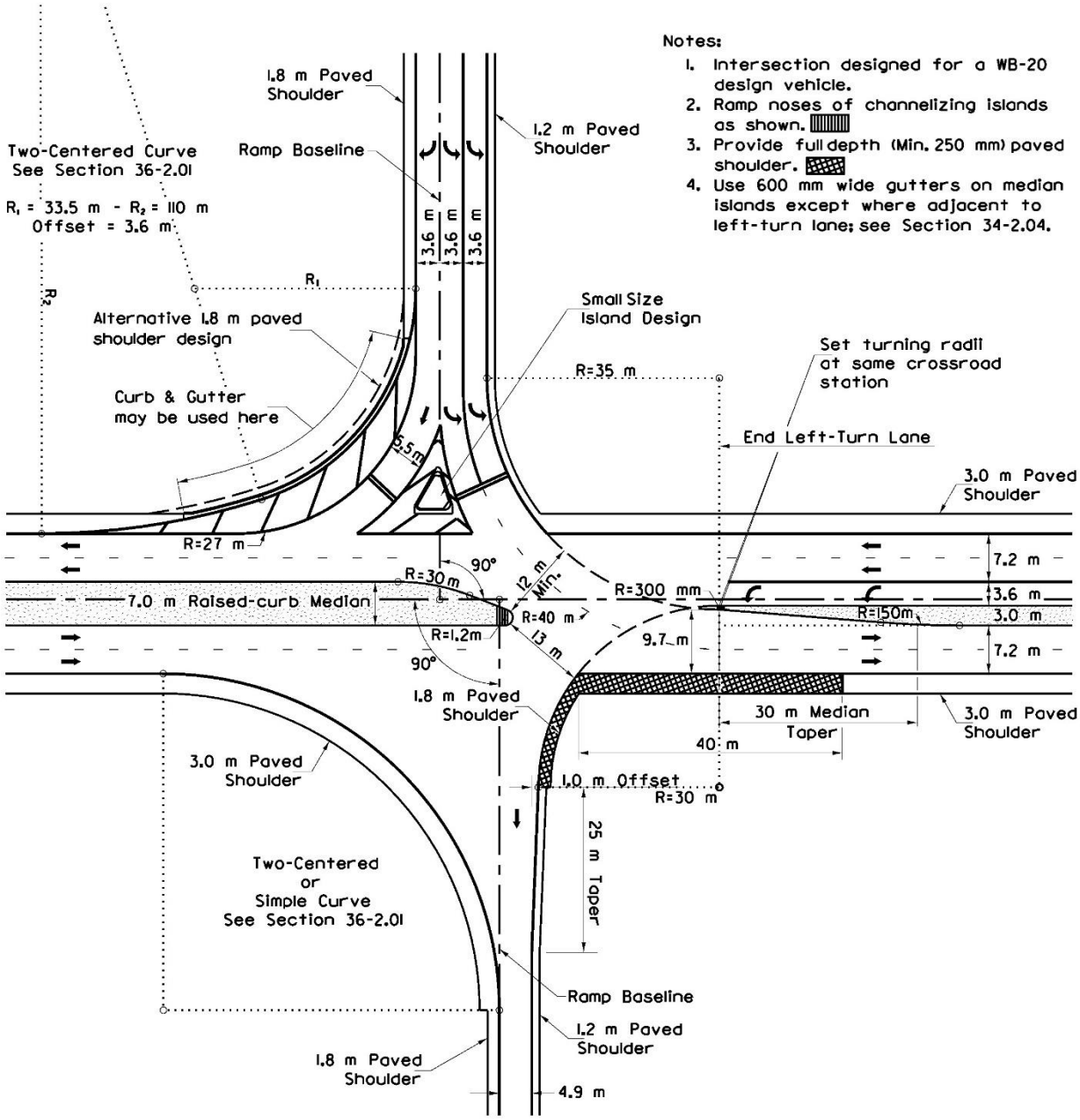

TYPICAL RAMP/CROSSROAD INTERSECTION — DIAMOND INTERCHANGE
(90 Degrees on Entrance and Exit and Dual Left Turns on Exit Ramp)
(Metric)

Figure 37-5.G

HARD COPIES UNCONTROLLED

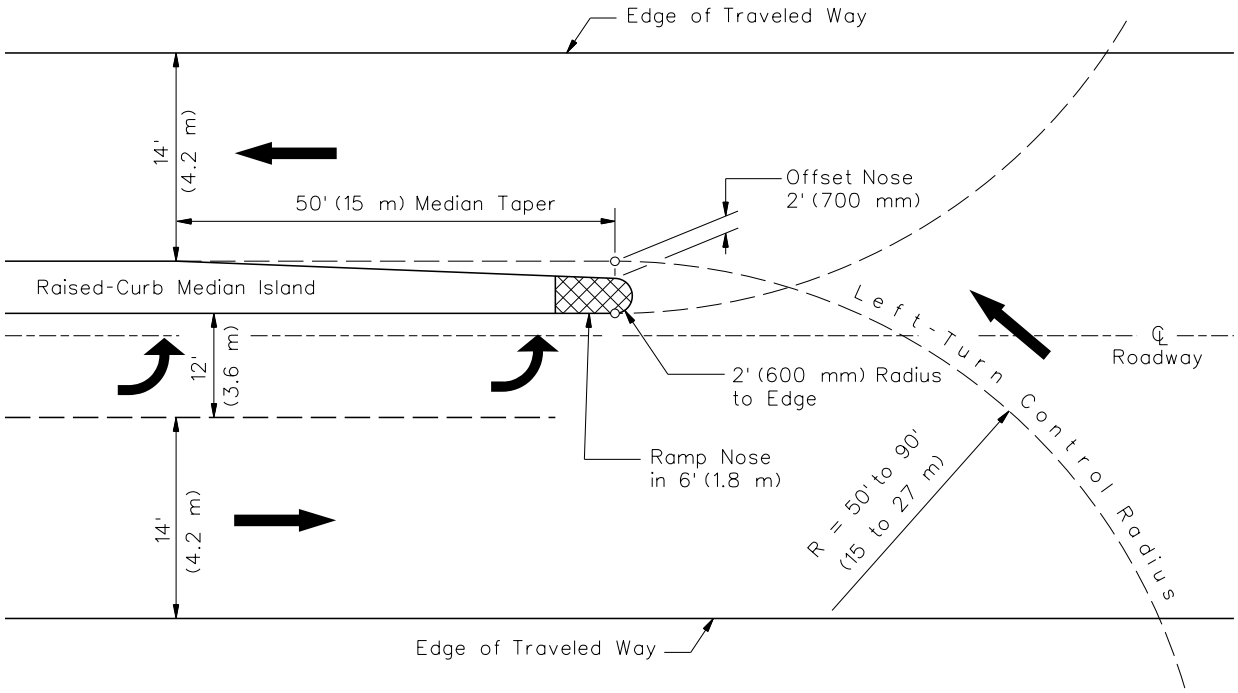

OFFSET MEDIAN NOSE DETAIL
(Interchange Crossroad)

Figure 37-5.H

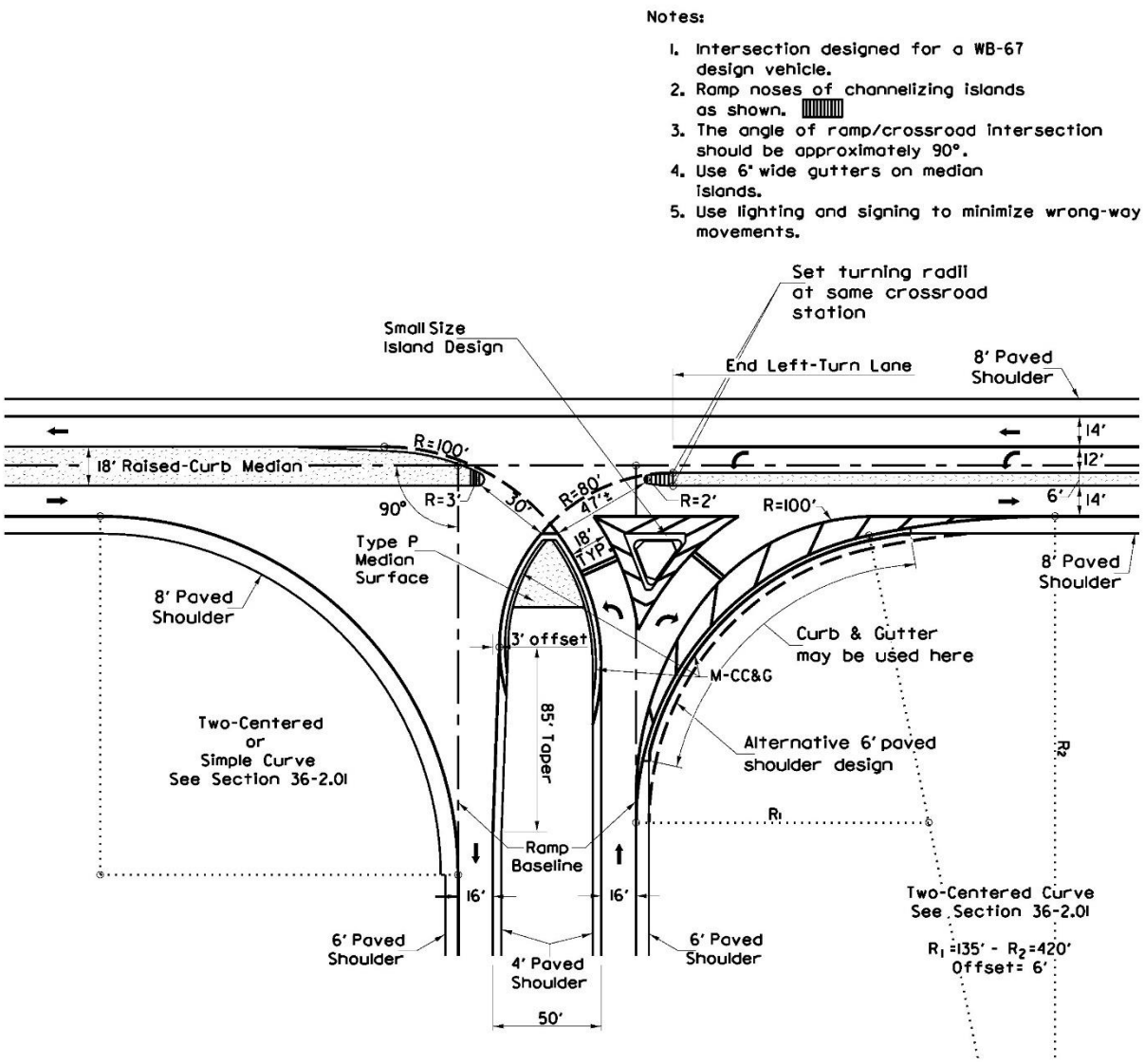

TYPICAL RAMP/CROSSROAD INTERSECTION — PARCLO INTERCHANGE (Two-Quad) (US Customary)

Figure 37-5.I

HARD COPIES UNCONTROLLED

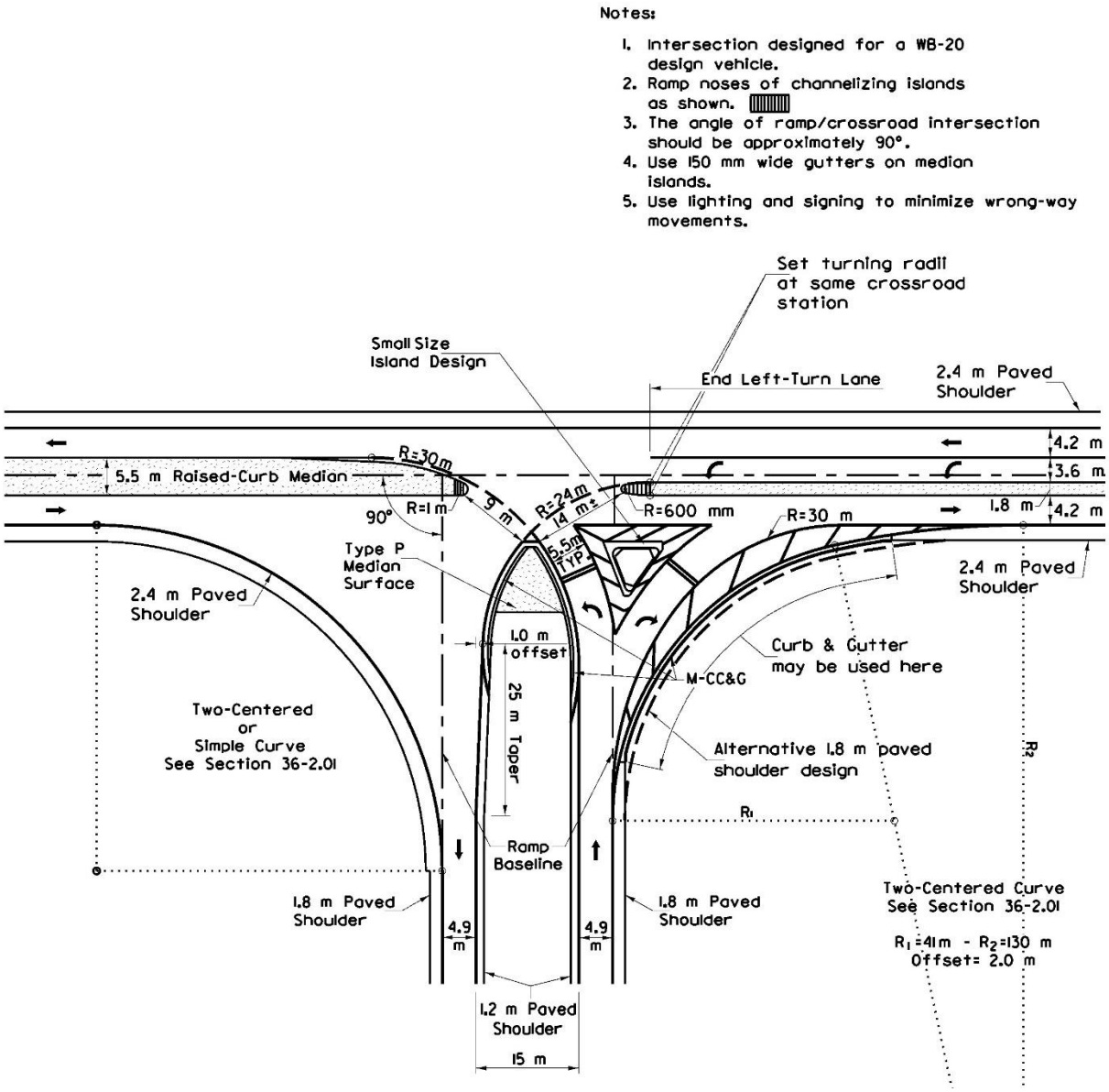

TYPICAL RAMP/CROSSROAD INTERSECTION — PARCLO INTERCHANGE (Two-Quad) (Metric)

Figure 37-5.I

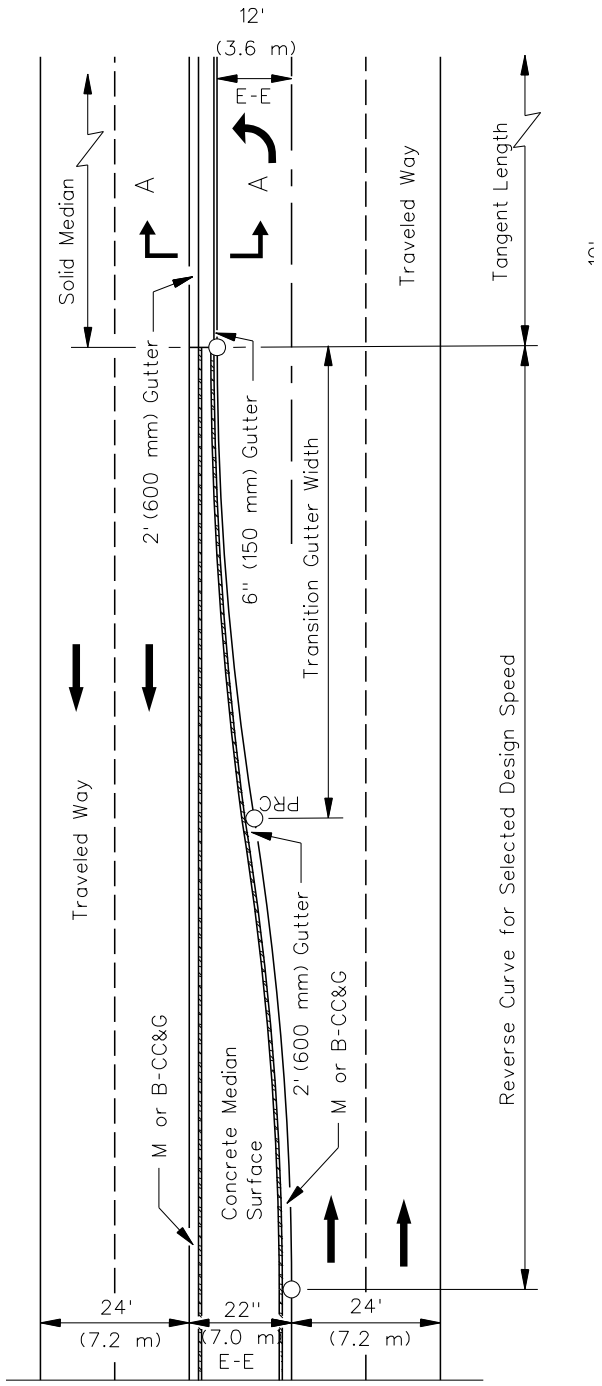

Notes:

1. *Ramp terminals with the crossroad usually will be signalized.*
2. *For the design speed of 50 mph (80 km/hr), use an M-4.24 (M-10.60) curb and gutter on the median.*

TYPICAL CROSSROAD MEDIAN DETAIL
(Diamond Interchange)

Figure 37-5.J

HARD COPIES UNCONTROLLED

37-5.02(c) Four-Quadrant Partial Cloverleaf Interchange

The controlled ramp terminals of a four-quadrant partial cloverleaf interchange are similar in design to the ramp/crossroad intersections of a diamond interchange; however, they must be located to minimize any adverse operational effects on the directional ramps in the opposite quadrants. The left-turning path from the controlled ramp terminal of the four-quadrant partial cloverleaf Type A must intersect the crossroad downstream from the gore of the exit terminal, as illustrated in Figure 37-5.K. The minimum distance of 200 ft (60 m) discourages wrong-way movements and allows for stored vehicles on the crossroad when signalized.

For the four-quadrant partial cloverleaf Type B, illustrated in Figure 37-5.L, terminate the left-turn lane from the crossroad into the controlled entrance ramp in advance of the merging nose of the entrance terminal. Providing this separation minimizes confusion between two decision points on the crossroad and provides better traffic operations when signalized.

37-5.02(d) Compressed Diamond with Slip Ramps

The designer must consider the impact of frontage roads, where present, on interchange design. At some urban interchanges, separating the intersection of the ramp and frontage road with the crossroad may be impractical. In these cases, the only alternative is to provide a slip ramp to a one-way frontage road before the intersection with the crossroad. This can apply to either an exit or entrance ramp. Sufficient distance must then be provided between the freeway ramp terminal and the ramp/frontage road terminal to provide the necessary acceleration or deceleration distance and weaving distance.

Figure 37-5.M provides the basic schematic for this design. The critical design element is the distance “A” between the ramp/frontage road merge and the crossroad. This distance must be sufficient to allow traffic weaving, vehicular deceleration and stopping, and vehicular storage to avoid interference with the merge point. Figure 37-5.M presents general guidelines that may be used to estimate this distance during the preliminary design phase. A number of assumptions have been made including weaving volume, operating speeds, and intersection queue distance. Therefore, a detailed analysis will be necessary to firmly establish the needed distance to properly accommodate vehicular operations. Additional information can be found in a Transportation Research Record 682 article entitled, “Distance Requirements for Frontage-Road Ramps to Cross Streets: Urban Freeway Design” or in the Texas Transportation Institute publication *Procedures to Determine Frontage Road Level of Service and Ramp Spacing*.

Distance “B” in Figure 37-5.M is determined on a case-by-case basis. It should be determined based on the number of frontage road lanes and the intersection design. This distance is typically determined by the necessary weave distance from the intersection to the ramp entrance. For capacity analysis of the weave section, see the *Highway Capacity Manual*.

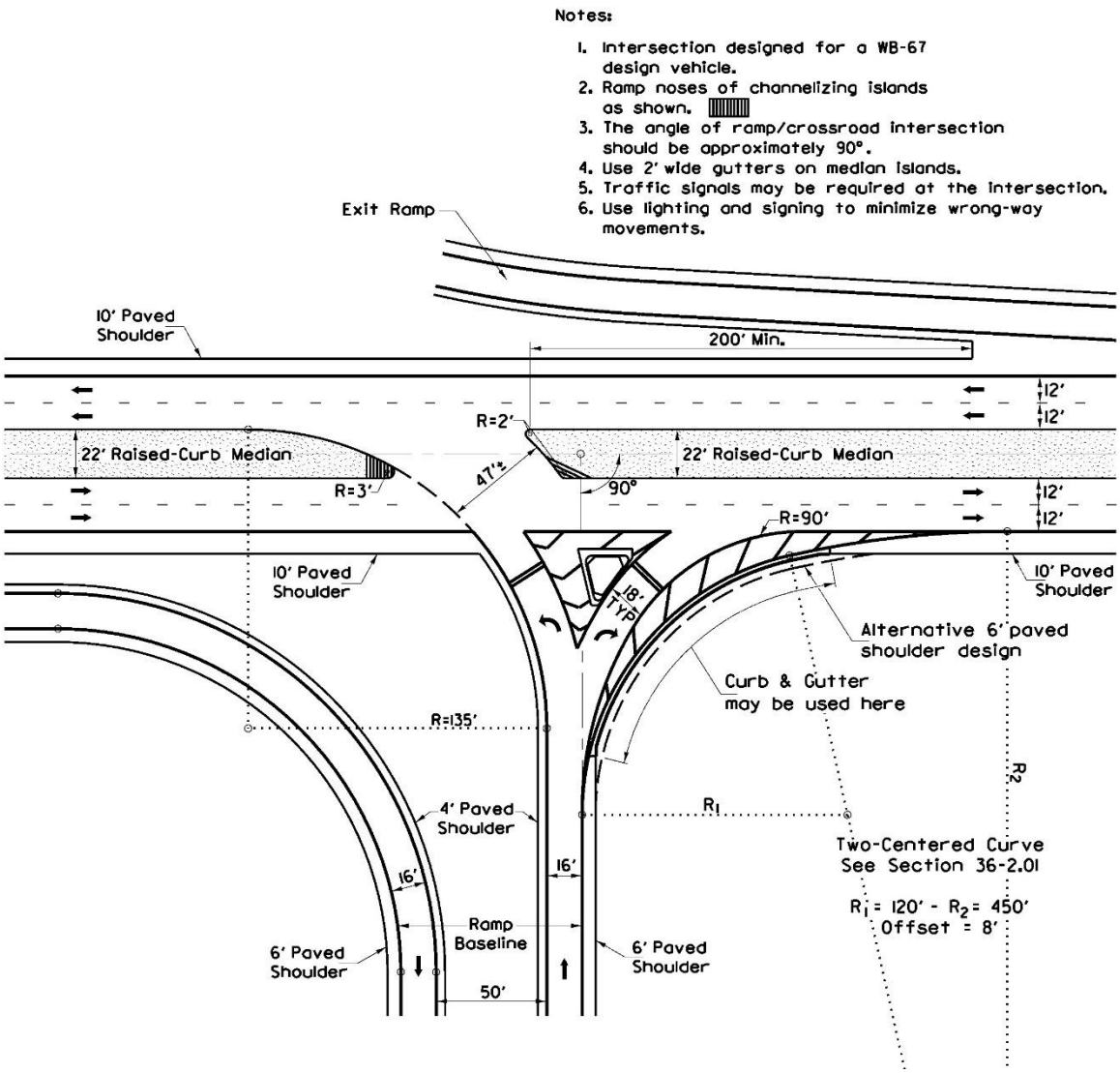

CONTROLLED TERMINAL — PARCLO INTERCHANGE
(Four-Quad – Type A)
(US Customary)

Figure 37-5.K

HARD COPIES UNCONTROLLED

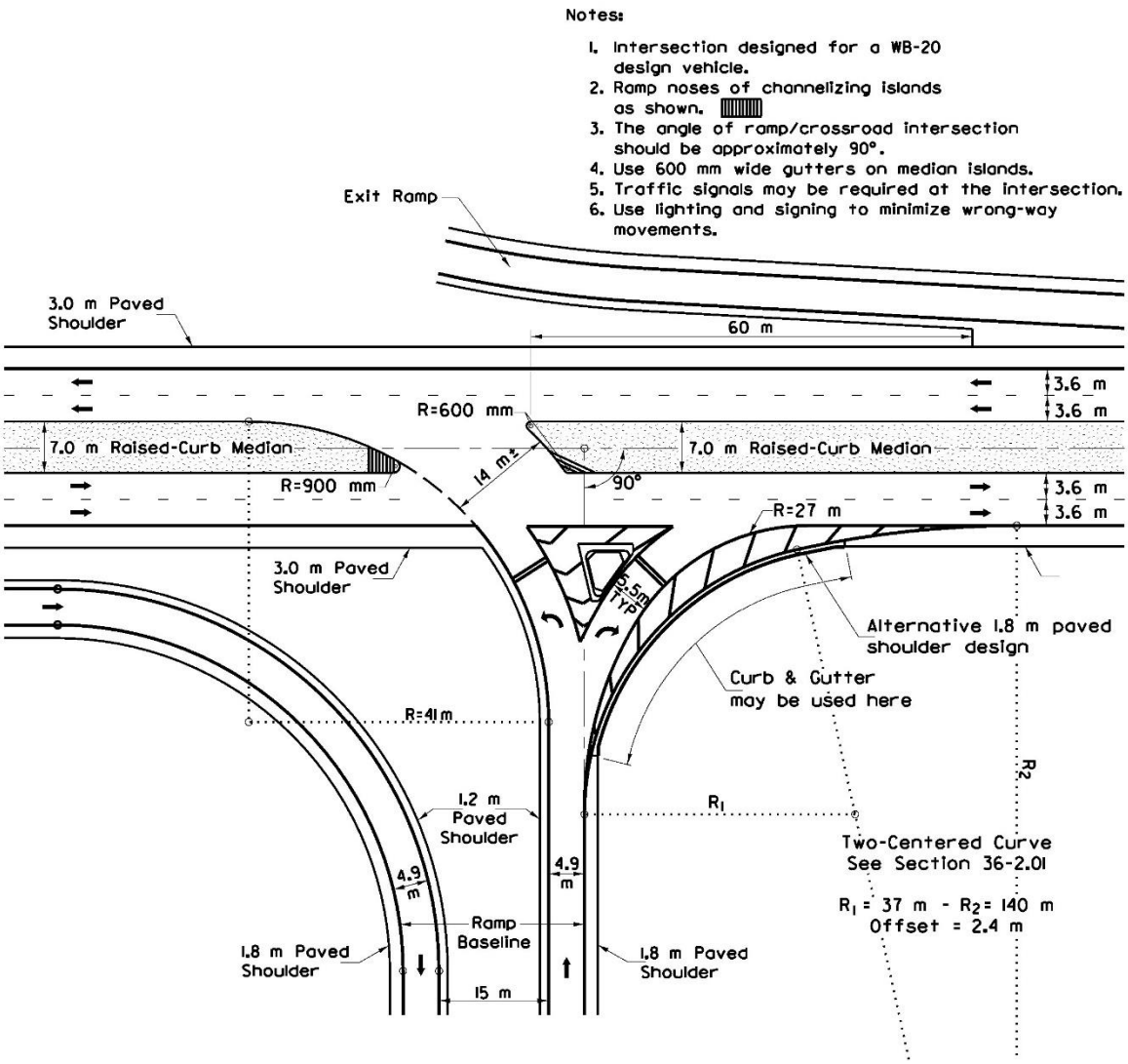

CONTROLLED TERMINAL — PARCLO INTERCHANGE
(Four-Quad - Type A)
(Metric)

Figure 37-5.K

Notes:

1. Intersection designed for a WB-67 design vehicle.
2. Ramp noses of channelizing islands as shown.
3. Provide full depth (Min. 10") paved shoulder.
4. The angle of ramp/crossroad intersection should be approximately 90°.
5. Use 2' wide gutters on median islands except where adjacent to left-turn lane; see Section 34-2.04.
6. Traffic signals may be required at the intersection.
7. Use Lighting and signing to minimize wrong-way movements.
8. See Section B-B on Standard Entrance Terminal.

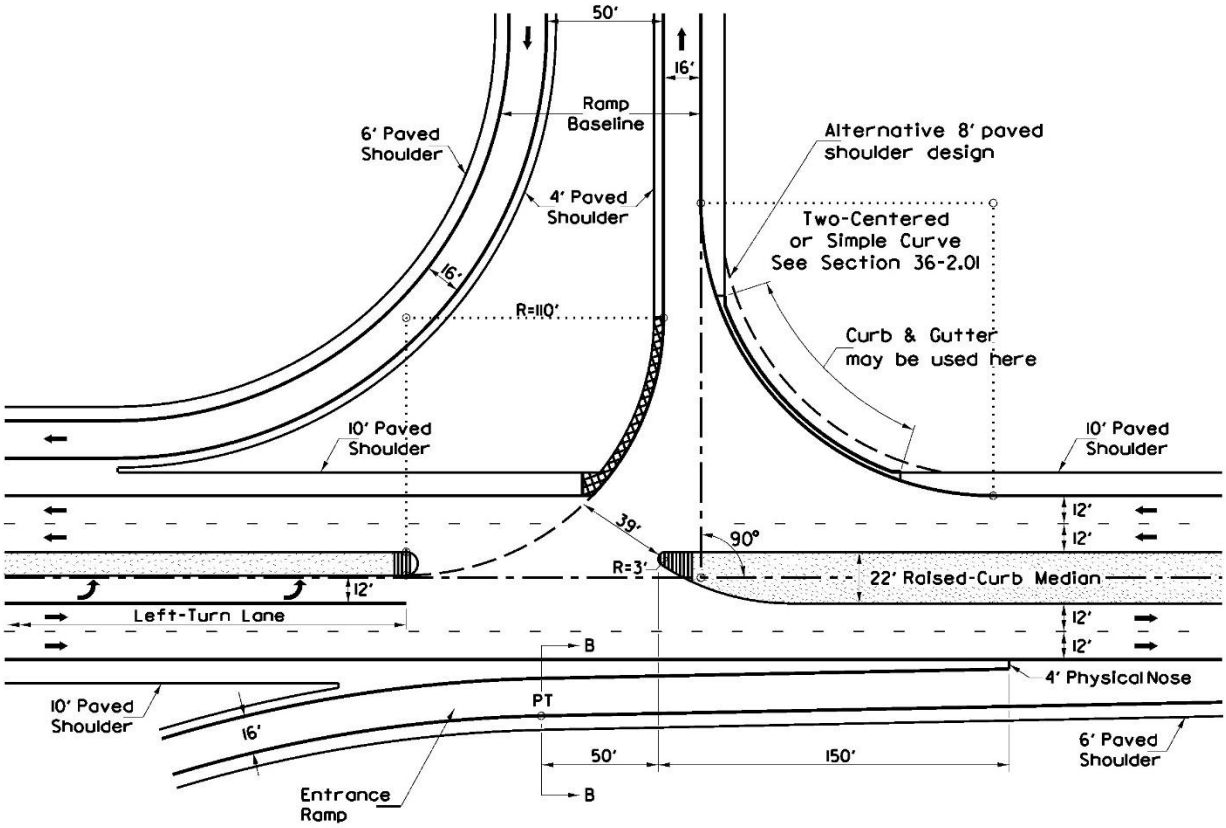

CONTROLLED TERMINAL — PARCLO INTERCHANGE
(Four-Quad – Type B)
(US Customary

Figure 37-5.L

HARD COPIES UNCONTROLLED

Notes:

1. Intersection designed for a WB-20 design vehicle.
2. Ramp noses of channelizing islands as shown.
3. Provide full depth (Min. 250 mm) paved shoulder.
4. The angle of ramp/crossroad intersection should be approximately 90°.
5. Use 600 mm wide gutters on median islands except where adjacent to left-turn lane; see Section 34-2.04.
6. Traffic signals may be required at the intersection.
7. Use Lighting and signing to minimize wrong-way movements.
8. See Section B-B on Standard Entrance Terminal.

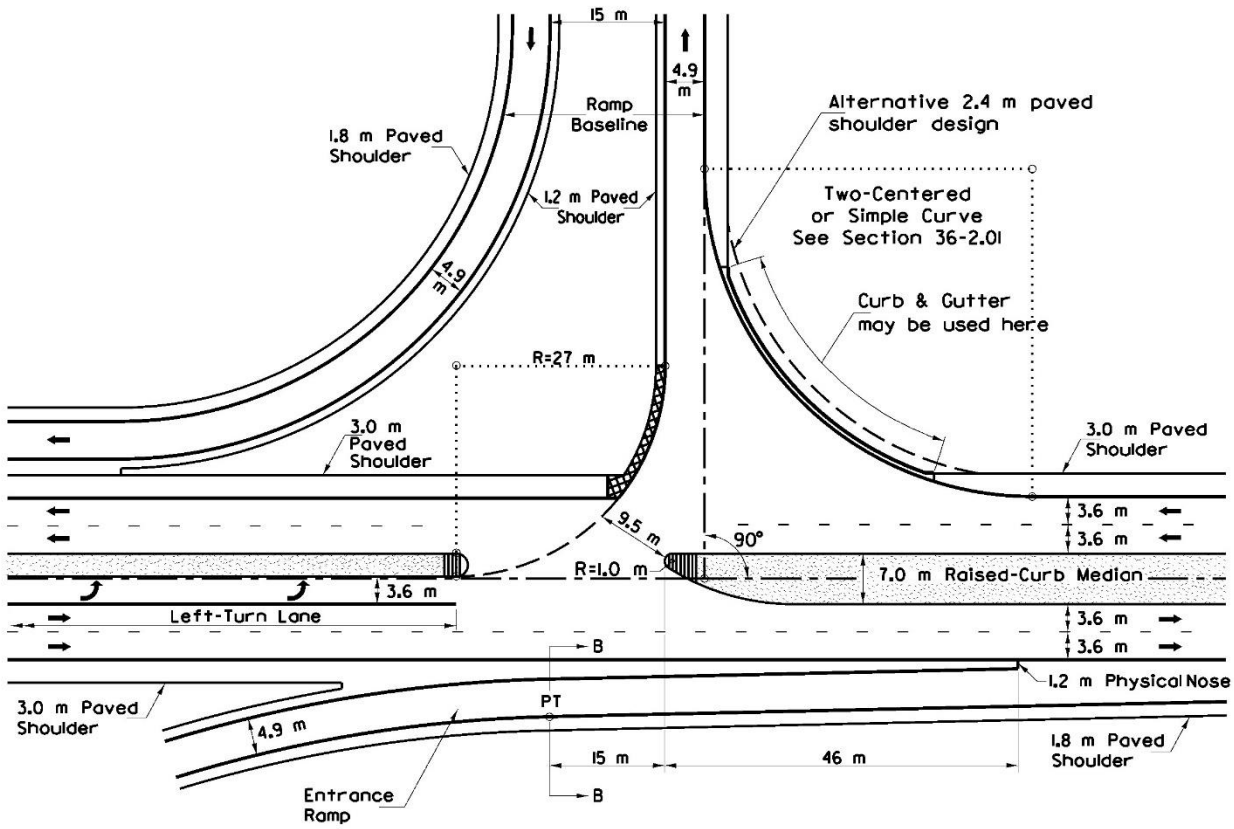

CONTROLLED TERMINAL — PARCLO INTERCHANGE
(Four-Quad – Type B)
(Metric)

Figure 37-5.L

Frontage Road Volume at Intersection (vph)①	Exit Ramp Volume (vph)②	"A"		
		Typical Minimum	Typical Desirable	Special Considerations
200	140	380 ft (115 m)	500 ft (150 m)	270 ft (80 m)
400	280	465 ft (140 m)	565 ft (170 m)	370 ft (110 m)
600	420	500 ft (150 m)	635 ft (190 m)	400 ft (120 m)
800	560	550 ft (165 m)	700 ft (210 m)	435 ft (130 m)
1000	700	600 ft (180 m)	765 ft (230 m)	465 ft (140 m)
1200	840	650 ft (195 m)	885 ft (265 m)	485 ft (145 m)
1400	980	700 ft (210 m)	985 ft (295 m)	500 ft (150 m)
1600	1120	785 ft (235 m)	1085 ft (325 m)	535 ft (160 m)
1800	1260	865 ft (260 m)	1200 ft (360 m)	565 ft (170 m)
2000	1400	985 ft (295 m)	1315 ft (395 m)	600 ft (180 m)

① *Assumes the total volume of traffic on the frontage road including the merged exit-ramp volume.*
② *Assumed to be 70% of total volume in first column.*

Notes:

1. *Table values are acceptable for planning purposes only. Final lengths will be based on a detailed operational analysis. This design may be used only in restricted urban areas.*
2. *Distance "B" is determined on a case-by-case basis.*
3. *"C" is a slip ramp.*
4. *See Chapter 35 for access control design along frontage road and crossroad.*

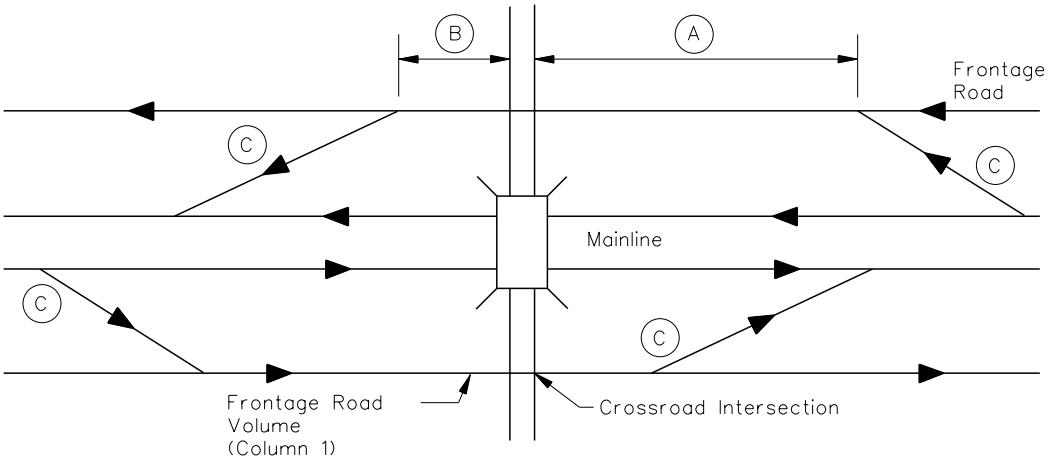

RAMP/CONTINUOUS FRONTAGE ROAD INTERSECTION

Figure 37-5.M

HARD COPIES UNCONTROLLED

37-5.03 Crossroad Access Control

Providing access control along the crossroad of an interchange is an important design feature for both the safety and efficient operation of an interchange. The access control line is defined as a line established by the Department that restricts direct access to property abutting a highway. See Chapter 35 for additional details on access control limits.

HARD COPIES UNCONTROLLED

37-6 FREEWAY RAMP TERMINALS

37-6.01 Exit Ramp Terminals

37-6.01(a) Types

The exit ramp terminal is a speed-change lane that permits high-speed traffic to exit from the through lane of the highway and enter the ramp proper. The exit terminal must be visible to the approaching motorist and provide a clear indication for the point of departure from the traveled way. When designing the interchange, consider the following exit ramp types:

1. Standard Exit Terminal. There are two basic types of exit freeway ramp terminals — the parallel design and the taper design. For all new and reconstructed ramps, use the taper design. Figure 37-6.A and the *Illinois Highway Standards* illustrate the Department's standard exit ramp terminal design. Exit ramp terminals may carry a marked route provided the marked route is not a freeway or expressway. Where a freeway or expressway turns through an interchange, use the major divergence design as discussed in Section 37-6.03.

2. Exit Terminal With an Auxiliary Lane. An auxiliary lane may be required prior to the exit terminal:

   - to meet the guidelines discussed in Section 37-2.05,
   - where the exiting design traffic exceeds the appropriate service volume of a standard exit terminal design but does not require a two-lane exit, and/or
   - proceeding a left-hand exit terminal. Note that interchange designs should not use left-hand exit terminals. However, where necessary, left-hand exits must be first approved by BDE before the interchange type approval.

   Figure 37-6.B illustrates the design criteria for an exit terminal preceded by an auxiliary lane. Extend the pavement markings on the left edge of the ramp to the right edge of the mainline traveled way. Provide transverse pavement markings in the recovery area to discourage the use of the auxiliary lane beyond the exit gore. Pavement markings in the recovery area should be according to the Bureau of Operations' *Policies and Procedures Manual*.

3. Two-Lane Exits. These terminals are typically required where the traffic volumes on the ramp exceed the capacity of a single-lane exit ramp. The following lists several elements the designer should consider for two-lane exit terminals:

   a. Lane Balance. For consistent freeway operations, maintain lane balance at the freeway ramp terminal; see Section 37-2.03.

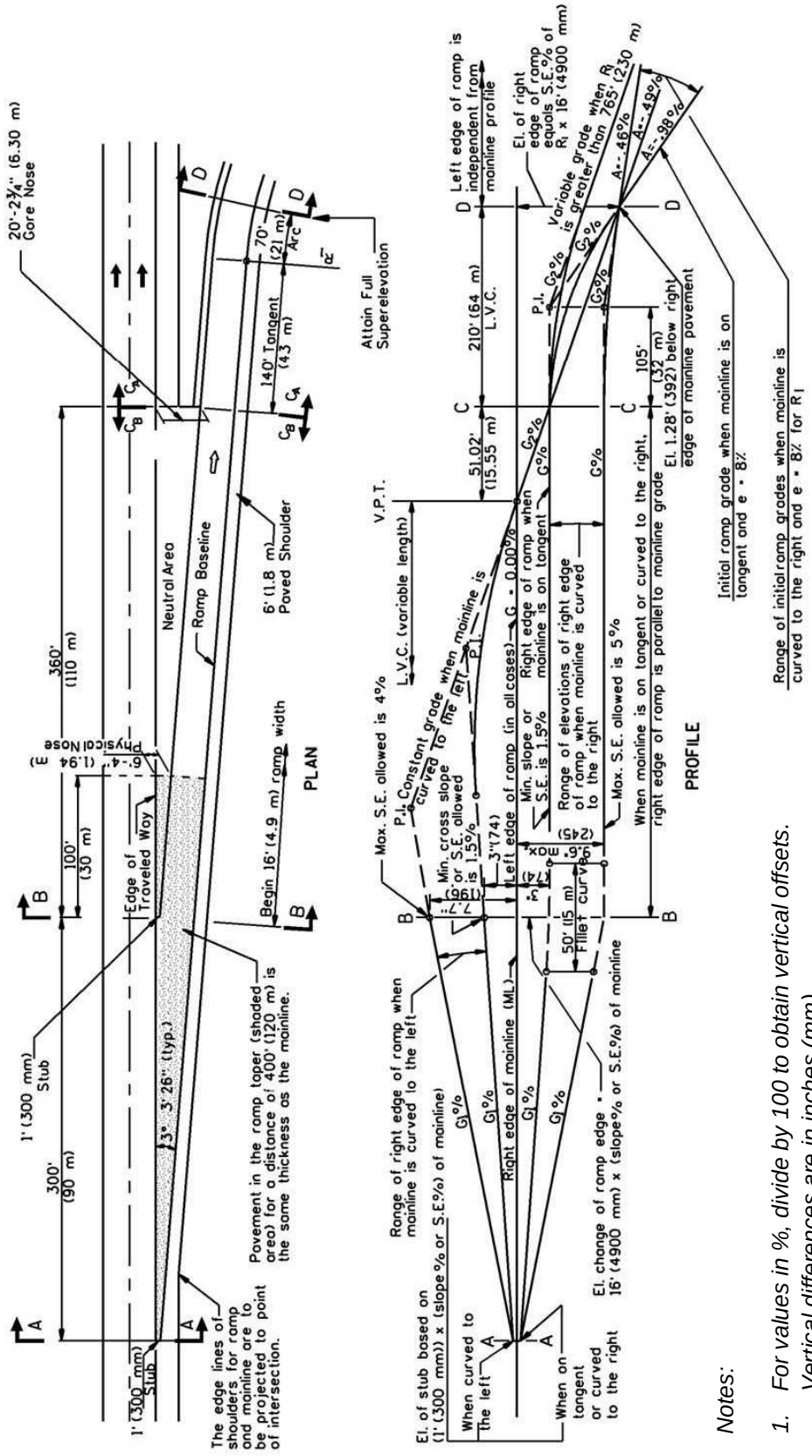

Notes:

1. *For values in %, divide by 100 to obtain vertical offsets. Vertical differences are in inches (mm).*
2. *C_A = Cross section ahead*
3. *C_B = Cross section back*
4. *Mainline grade is assumed to be 0%.*
5. *See Highway Standards for Sections B-B and C-C.*

STANDARD EXIT RAMP TERMINAL

Figure 37-6.A

HARD COPIES UNCONTROLLED

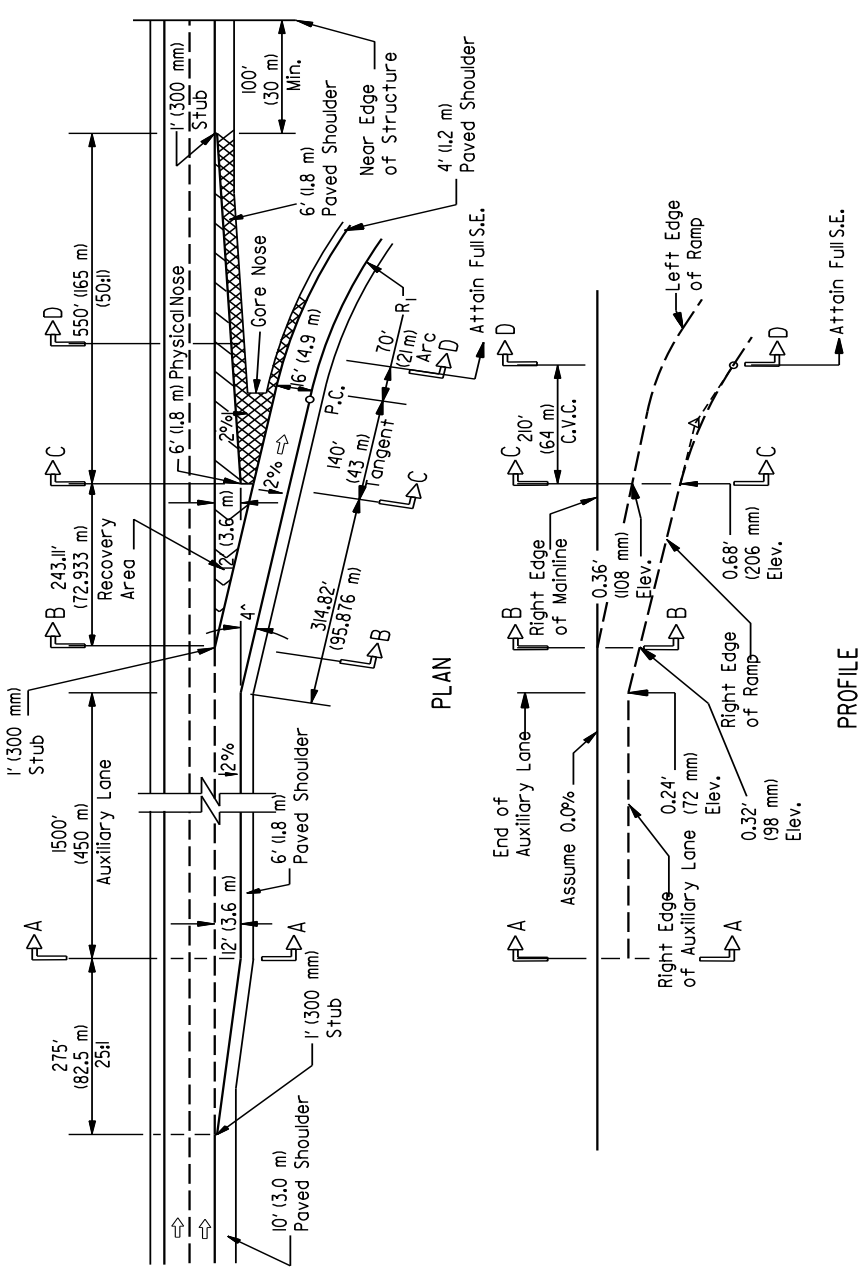

Notes:

1. *Where the mainline is superelevated to the left or right, the terminal elevations and grades must be adjusted.*
2. *A 50 ft (15 m) vertical curve may be used for comfort and aesthetics along the right edge of the ramp at the grade changes.*
3. *Include cross sections A-A, B-B, C-C, and D-D with the IDS.*
4. *Regardless of the % S.E. at D-D, the % cross slope at the PC is always ⅔ the difference between C-C and D-D.*

EXIT RAMP TERMINAL WITH AUXILIARY LANE

Figure 37-6.B

b. Design. A typical two-lane exit terminal design is illustrated in Figure 37-6.C. To develop the proper level of service at a two-lane exit facility and provide proper lane balance, add a minimum 1500 ft (450 m) long auxiliary lane prior to the exit terminal. The concepts for controlling gradelines and pavement cross slopes on two-lane exit terminals are generally the same as those described for major divergences. Prepare detailed cross sections for critical locations on the two-lane exit ramp and present them in the Interchange Design Study (IDS).

37-6.01(b) Sight Distance

The sight distance approaching the gore nose should exceed the stopping sight distance for the through traffic, desirably by 25% or more. Where there are unusual conditions, consider providing decision sight distance to the exit terminal. Extra sight distance is particularly important for exit loops immediately beyond a structure. When measuring for adequate sight distance, ensure that the motorist can see the pavement surface at and beyond the gore nose. Locating the exit terminal and gore nose where the mainline is on an upgrade provides the best design condition. Do not locate exit terminals near mainline crest vertical curves where the ramp pavement may disappear from the driver's view.

37-6.01(c) Alignment

Figures 37-6.D through 37-6.F illustrate methods to determine the grades along sections of typical exit ramp terminals where the mainline is on tangent, curving to the right, and curving to the left. The Department's preferred practice is to locate exit terminals on tangent sections or on mainline curves to the right. However, this may not be practical in highly restricted areas. Section 37-4.07 discusses the minimum alignment criteria for the ramp proper, including the minimum radii for the initial ramp curve (R_1).

HARD COPIES UNCONTROLLED

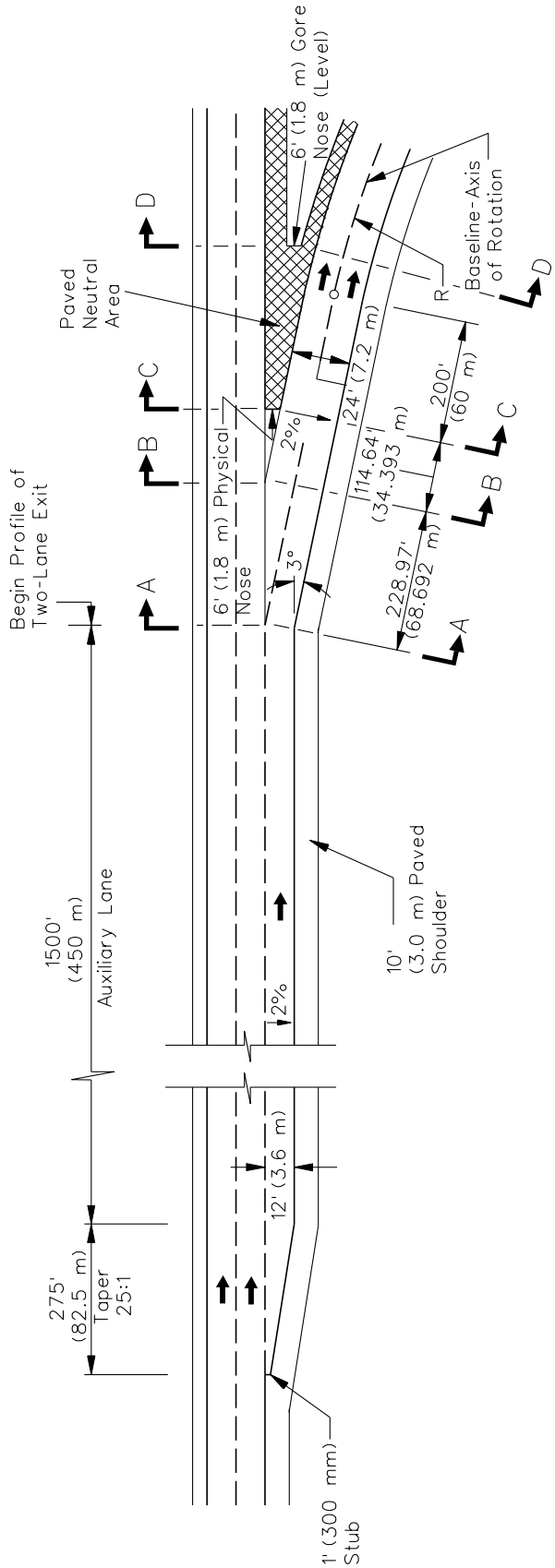

Notes:

1. *Attain full superelevation at Section D-D.*
2. *Include cross sections A-A, B-B, C-C, and D-D with the IDS.*

TWO-LANE EXIT RAMP TERMINAL

Figure 37-6.C

Example 37-6.1

Given: Freeway design speed = 70 mph
Freeway is on tangent
Freeway grade, G = +2.00%
Initial ramp curve radius, R_1 = 760 ft
Ramp e_{max} = 8%

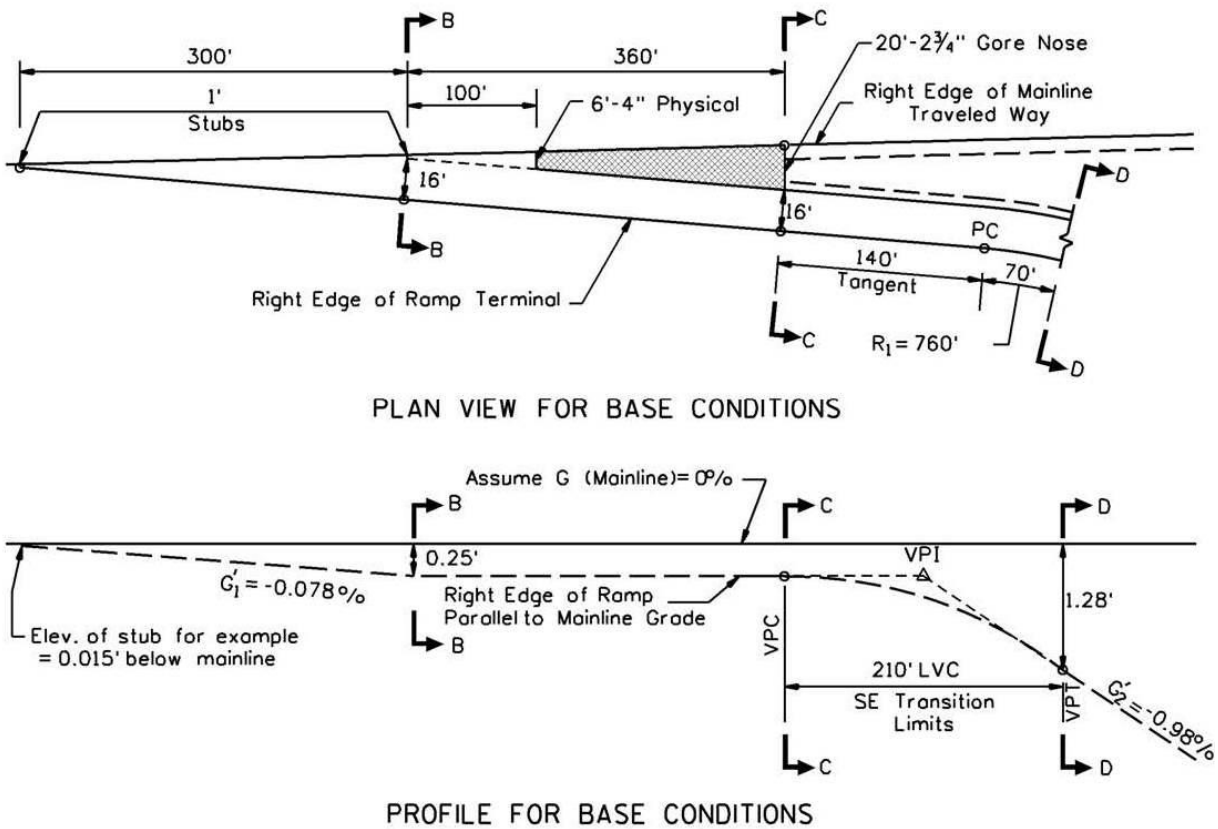

APPLICATION: See Figure 37-6.A.

Problem: Find G_1 and G_2, where G_1 and G_2 are the actual design grades.

EXAMPLE EXIT RAMP TERMINAL
(Mainline on Tangent)

Figure 37-6.D(1)
(1 of 2)

HARD COPIES UNCONTROLLED

Solution:

1. Determine G_1.

$G_1 = G + G_1'$

Use the profile equation for base conditions for the mainline:
Mainline profile = 0.0%
Mainline on tangent

$$G_1' = \left[\frac{(e/100 \times 16) - (e/100 \times 1)}{300}\right] \times 100$$

Where: e = superelevation of the mainline (maximum 5% for G_1').

Determine actual G_1

$$G_1 = 2.00 + \left[\frac{(-1.56/100 \times 16) - (-1.56/100 \times 1)}{300}\right] \times 100$$

$G_1 = 2.00\% + (-0.078\%) = +1.922\%$

2. Determine G_2.

$G_2 = G + G_2'$

Use the profile equation for base conditions for the ramp:
Mainline profile = 0.0%
R_1 = 760 ft

$$G_2' = \left[\frac{(e/100 \times 16) - (\text{Elev. Of VPI})}{105}\right] \times 100$$

Where: 105 ft = half of LVC
And e = superelevation for the radius R_1
From Figure 32-3.B, ramp superelevation: e = 8.0% for R_1 of 760 ft.

Determine actual G_2

$$G_2 = 2.00 + \left[\frac{(-8.0/100 \times 16) - (-0.25)}{105}\right] \times 100$$

$G_2 = 2.00\% + (-0.98\%) = +1.02$

EXAMPLE EXIT RAMP TERMINAL
(Mainline on Tangent)

Figure 37-6.D(1)
(2 of 2)

Example 37-6.2

Given: Freeway design speed = 70 mph
Freeway is on tangent
Ramp design speed = 50 mph
Freeway grade, G = +2.00%
Initial ramp curve radius, R_1 = 1560 ft
Ramp e_{max} = 8%

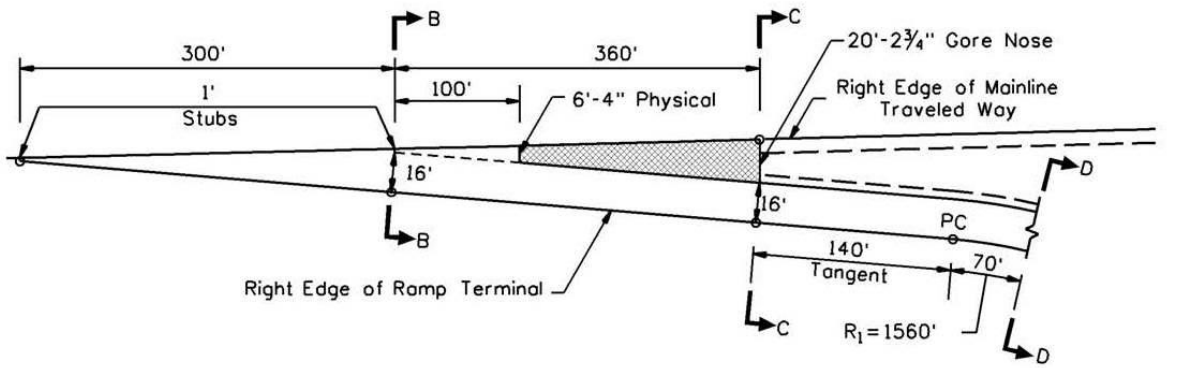

PLAN VIEW FOR BASE CONDITIONS

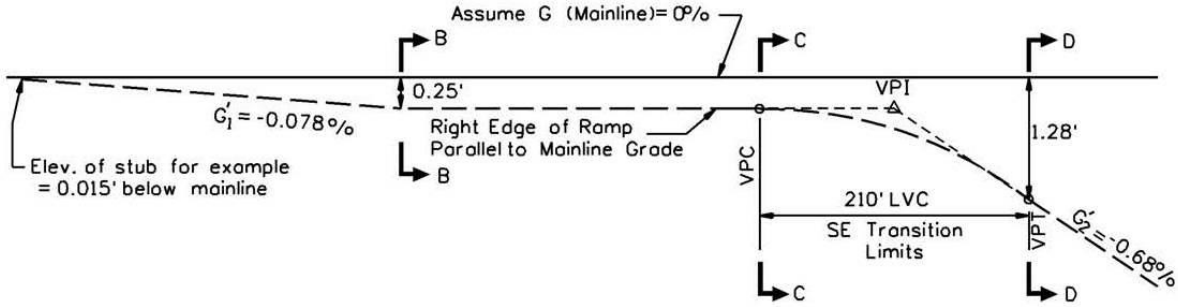

PROFILE FOR BASE CONDITIONS

APPLICATION: See Figure 37-6.A.

Problem: Find G_1 and G_2, where G_1 and G_2 are the actual design grades.

EXAMPLE EXIT RAMP TERMINAL
(Mainline on Tangent)

Figure 37-6.D(2)
(1 of 2)

HARD COPIES UNCONTROLLED

Solution:

1. Determine G_1.

   G_1 = +1.922%

   (See Example Problem 37-6.1 for G_1 calculations.)

2. Determine G_2.

   $G_2 = G + G_2'$

   Use the profile equation for base conditions for the ramp except for R_1:
   Mainline profile = 0.0%
   R_1 = 1560 ft

$$G_2' = \left[\frac{(e/100 \times 16) - (\text{Elev. Of VPI})}{105}\right] \times 100$$

   Where: 105 ft = half of LVC
   And e = superelevation for the radius R_1
   From Figure 32-3.B, ramp superelevation: e = 6.0% for R_1 of 1560 ft.

   Determine actual G_2

$$G_2 = 2.00 + \left[\frac{(-6.0/100 \times 16) - (-0.25)}{105}\right] \times 100$$

$$G_2 = 2.00\% + (-0.68\%) = +1.32\%$$

EXAMPLE EXIT RAMP TERMINAL
(Mainline on Tangent)

Figure 37-6.D(2)
(2 of 2)

Example 37-6.3

Given: Freeway Design Speed = 70 mph
Freeway curves to the right, R = 3330 ft
Initial Ramp Radius, R_1 = 760 ft
Freeway Grade, G = – 1.80%
Freeway e_{max} = 6%
Ramp e_{max} = 8%

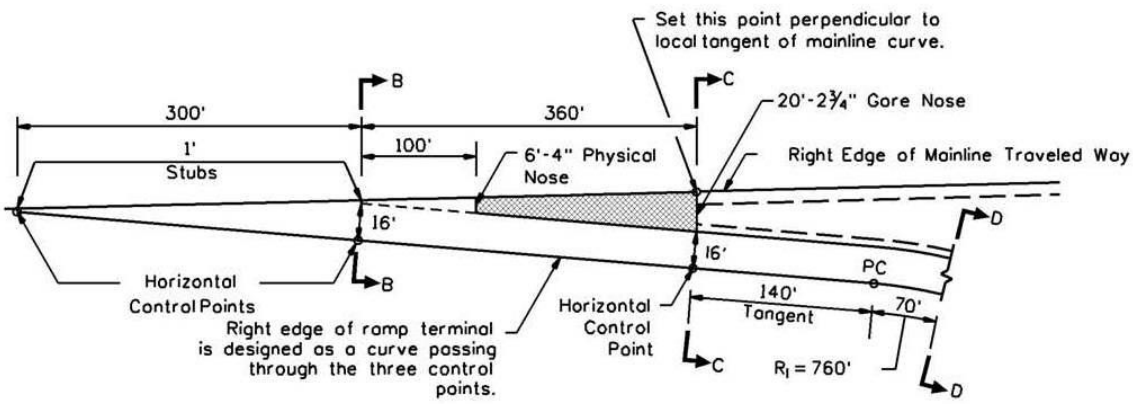

PLAN VIEW FOR BASE CONDITIONS

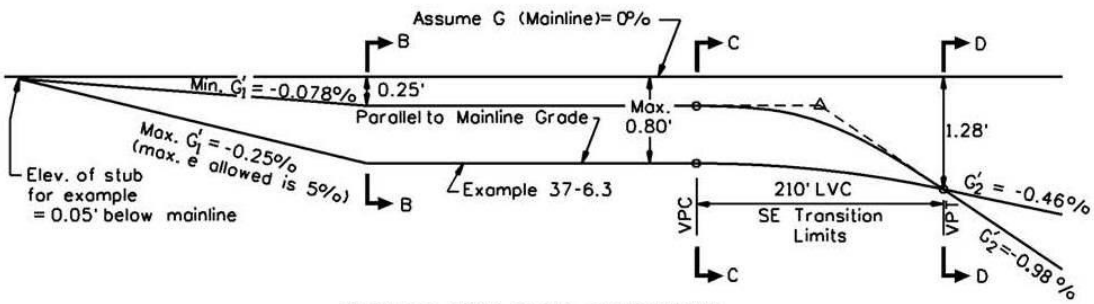

PROFILE FOR BASE CONDITIONS

APPLICATION: See Figure 37-6.A.

Problem: Find G_1 and G_2, where G_1 and G_2 are the actual design grades.

EXAMPLE EXIT RAMP TERMINAL
(Mainline Curving to the Right)

Figure 37-6.E(1)
(1 of 2)

HARD COPIES UNCONTROLLED

Solution:

1. Determine G_1.

$G_1 = G + G_1'$

Use the profile equation for base conditions for the mainline except mainline is on curve:
Mainline profile = 0.0%
From Figure 32-3.C, the freeway superelevation, e = 5.0%.
5% is the maximum superelevation of the ramp terminal when the mainline is curved to the right.

$$G_1' = \left[\frac{(e/100 \times 16) - (e/100 \times 1)}{300}\right] \times 100$$

Where: e = superelevation of the mainline (maximum SE is 5% for G_1').

Determine actual G_1

$$G_1 = -1.80 + \left[\frac{(-5.0/100 \times 16) - (-5.0/100 \times 1)}{300}\right] \times 100$$

$G_1 = -1.80\% + (-0.25\%) = -2.05\%$

2. Determine G_2.

$G_2 = G + G_2'$

Use the profile equation for base conditions for the ramp.
Mainline profile = 0.0%
R_1 = 760 ft

$$G_2' = \left[\frac{(e/100 \times 16) - (\text{Elev. of VPI})}{105}\right] \times 100$$

Where: 105 ft = half of LVC
And e = superelevation for the radius R_1
From Figure 32-3.B, ramp superelevation: e = 8.0% for R_1 of 760 ft.

Determine actual G_2

$$G_2 = -1.80 + \left[\frac{(-8.0/100 \times 16) - (-0.80)}{105}\right] \times 100$$

$G_2 = -1.80\% + (-0.46\%) = -2.26\%$

EXAMPLE EXIT RAMP TERMINAL
(Mainline Curving to the Right)

Figure 37-6.E(1)
(2 of 2)

HARD COPIES UNCONTROLLED

Example 37-6.4

Given: Freeway Design Speed = 70 mph
Freeway curves to the right, R = 6490 ft
Initial Ramp Radius, R_1 = 760 ft
Freeway grade, G = +2.50%
Freeway e_{max} = 6%
Ramp e_{max} = 8%

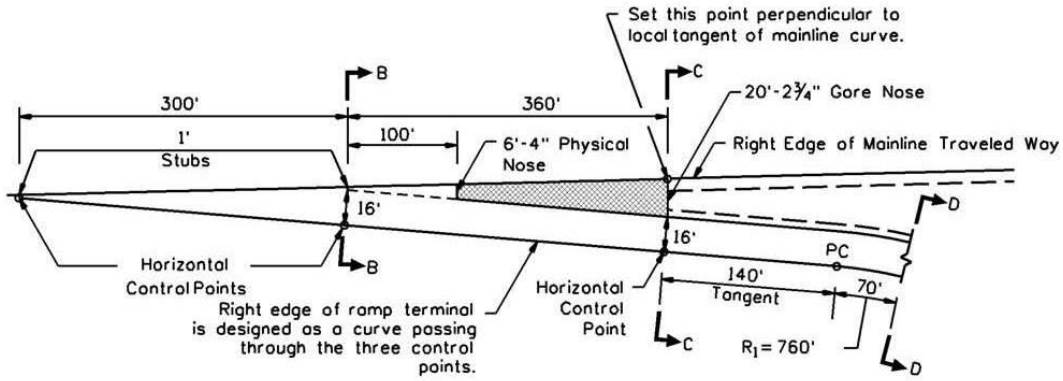

PLAN VIEW FOR BASE CONDITIONS

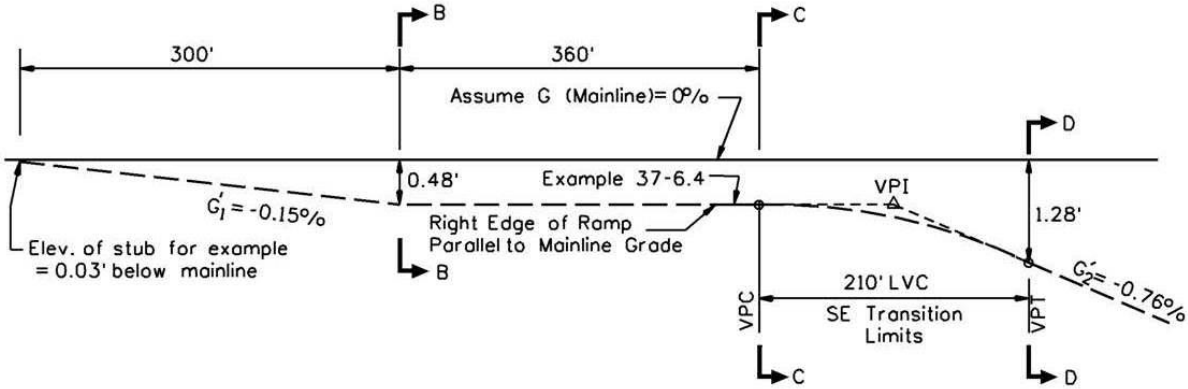

PROFILE FOR BASE CONDITIONS G (MAINLINE) = 0% AND R_1 FOR e = 8%

APPLICATION: See Figure 37-6.A.

Problem: Find G_1 and G_2.

EXAMPLE EXIT RAMP TERMINAL
(Mainline Curving to the Right)

Figure 37-6.E(2)
(1 of 2)

HARD COPIES UNCONTROLLED

Solution:

1. Determine G_1.

$G_1 = G + G_1'$

Use the profile equation for base conditions for the mainline except mainline is on curve:
Mainline profile = 0.0%
From Figure 32-3.C, the freeway superelevation, e = 3.0%.
5% is the maximum superelevation of the ramp terminal when the mainline is curved to the right.

$$G_1' = \left[\frac{(e/100 \times 16) - (e/100 \times 1)}{300}\right] \times 100$$

Where: e = superelevation of the mainline (maximum SE is 5% for G_1').

Determine actual G_1

$$G_1 = +2.50 + \left[\frac{(-3.0/100 \times 16) - (-3.0/100 \times 1)}{300}\right] \times 100$$

$G_1 = +2.50\ \% + (-0.15\%) = +2.35\%$

2. Determine G_2.

$G_2 = G + G_2'$

Use the profile equation for base conditions for the ramp.
Mainline profile = 0.0%
R_1 = 760 ft

$$G_2' = \left[\frac{(e/100 \times 16) - (\text{Elev. of VPI})}{105}\right] \times 100$$

Where: 105 ft = half of LVC
And e = superelevation for the radius R_1
From Figure 32-3.B, ramp superelevation: e = 8.0% for R_1 of 760 ft.

Determine actual G_2

$$G_2 = +2.50 + \left[\frac{(-8.0/100 \times 16) - (-0.48)}{105}\right] \times 100$$

$G_2 = +2.50\ \% + (-\ 0.76\%) = +1.74\%$

EXAMPLE EXIT RAMP TERMINAL
(Mainline Curving to the Right)

Figure 37-6.E(2)
(2 of 2)

Example 37-6.5

Given: Freeway Design Speed = 70 mph
Freeway curves to the left, R = 6010 ft
Initial Ramp Radius, R_1 = 760 ft (curved to the right)
Freeway Grade, G = + 2.00%
Freeway e_{max} = 6%
Ramp e_{max} = 8%

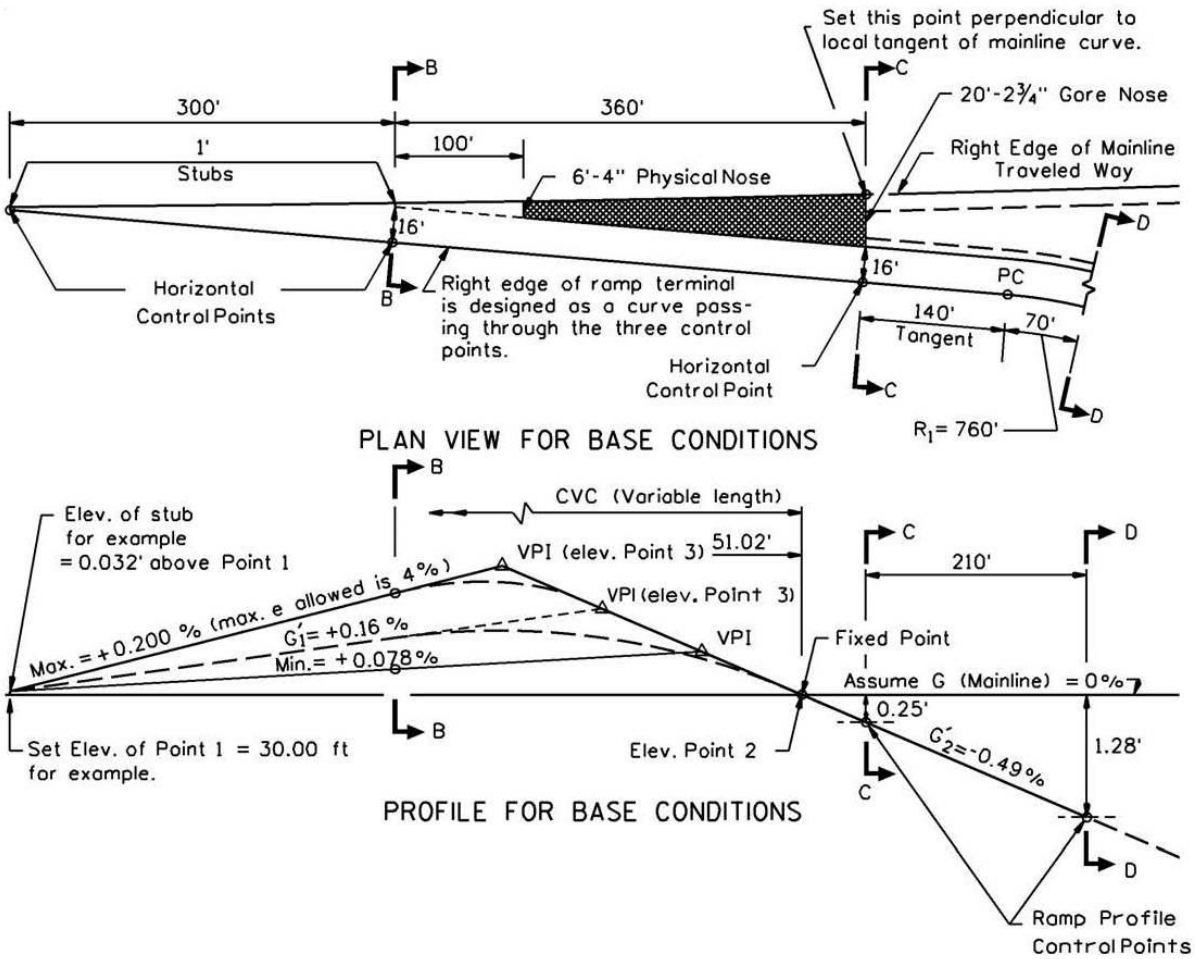

APPLICATION: See Figure 37-6.A.

Problem: Find G_1 and G_2.
Find the location and the elevation of the VPI along the right edge of the ramp.

EXAMPLE EXIT RAMP TERMINAL
(Mainline Curving to the Left)
Figure 37-6.F(1)
(1 of 3)

HARD COPIES UNCONTROLLED

Solution:

1. Determine G_1.

$G_1 = G + G_1'$

Use the profile equation for base conditions for the mainline except mainline is on curve:
Mainline profile = 0.0%
From Figure 32-3.C, the freeway superelevation, e = 3.2%.
4% is the maximum superelevation of the ramp terminal when the mainline is curved to the left.

$$G_1' = \left[\frac{(e/100 \times 16) - (e/100 \times 1)}{300}\right] \times 100$$

Where: e = superelevation of the mainline (maximum SE is 4% for G_1').

Determine actual G_1

$$G_1 = +2.00 + \left[\frac{(3.2/100 \times 16) - (3.2/100 \times 1)}{300}\right] \times 100$$

G_1 = +2.00 % + (0.16%) = +2.16%

2. Determine G_2.

$G_2 = G + G_2'$

Use the profile equation for base conditions for the ramp.
Mainline profile = 0.0%
R_1 = 760 ft

$$G_2' = \left[\frac{(e/100 \times 16) - (-0.25)}{210}\right] \times 100$$

Where: 210 ft is the distance between the points in the numerator.
- 0.25 is the fixed elevation of the right edge of the ramp at C-C relative to the right edge of the mainline
and e = superelevation for the radius R_1
From Figure 32-3.B, ramp superelevation: e = 8.0% for R_1 of 760 ft.

Determine actual G_2

$$G_2 = +2.00 + \left[\frac{(-8.0/100 \times 16) - (-0.25)}{210}\right] \times 100$$

G_2 = +2.00 % + (–0.49%) = +1.51%

EXAMPLE EXIT RAMP TERMINAL
(Mainline Curving to the Left)

Figure 37-6.F(1)
(2 of 3)

HARD COPIES UNCONTROLLED

3. Find the location and elevation of the VPI where the two design grades, G_1 and G_2, intersect:

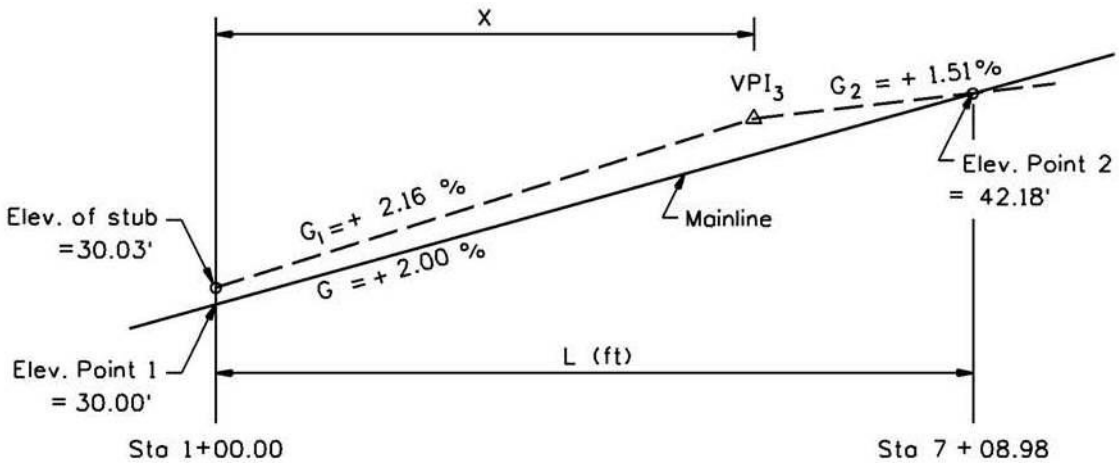

See Chapter 33 for basic equation of two lines intersecting:

$$x = \frac{(\text{Elev. of Pt. } 2 - \text{Elev. of Stub}) - G_2/100 \times L}{(G_1 - G_2)/100}$$

$$x = \frac{(42.18 - 30.03) - (1.51/100 \text{ x } 608.98)}{(2.16 - 1.51)/100}$$

x = 454.52 ft

Elev. of VPI_3 = G_1X + Elev. Stub

Elev. of VPI_3 = $\frac{2.16}{100}\ (454.52) + 30.03$

Elev. VPI_3 = 39.84 ft

EXAMPLE EXIT RAMP TERMINAL
(Mainline Curving to the Left)

Figure 37-6.F(1)
(3 of 3)

HARD COPIES UNCONTROLLED

Example 37-6.6

A high speed freeway with a mainline curve to the left may have certain situations where the typical profile design shown in Example 37-6.5 does not provide the best fit for an exit terminal. In these cases, extend the 140 ft tangent section of the standard exit terminal ahead on tangent before an initial ramp curve to the right is designed into the ramp alignment. The cross slope of the ramp at Section C-C and beyond should be set at 3/16″/ft. Near the end of the tangent section, the ramp is then rotated to transition into the superelevation runoff length.

EXAMPLE EXIT RAMP TERMINAL
(Mainline Curving to the Left)

Figure 37-6.F(2)

37-6.01(d) Superelevation and Cross Slopes

Ramp cross slopes and superelevation rates for horizontal curves on ramps near the freeway ramp terminal must be developed to properly transition the driver from the mainline to the first curve on the exit ramp. The following will apply:

1. Cross Slope. The cross slope of the initial segment of the ramp departure from the through lane, or an auxiliary lane preceding the exit ramp is usually sloped at the same rate as the mainline. However, if the mainline has a flat longitudinal grade (i.e., less than 0.35%), consider increasing the cross slope rate on an auxiliary lane and the exit terminal to 2%. Where the mainline is curving to the right, the maximum cross slope on the exit terminal is 5%. Where the mainline is curving to the left, the maximum cross slope on the terminal is 4%.

2. Maximum Ramp Superelevation. In general, use an e_{max} of 8%. However, in highly congested areas with snow and ice conditions, use an e_{max} of 6%.

3. Radius/Superelevation Rate. Section 32-3 discusses the use of Method 5 for open roadway conditions to distribute superelevation and side friction. This theoretical basis also applies to the ramp portion of freeway exit terminals. Therefore, Figure 32-3.B (e_{max} = 8%) and Figure 32-3.C (e_{max} = 6%) are used to determine the proper radius and superelevation rate for horizontal curves on exit ramps. Also, see Figure 37-4.F. To determine the applicable design speed to use, see Figure 37-6.G.

US Customary		Metric	
Mainline Design Speed (mph)	**Minimum Design Speed (mph)of Initial Curve (R_1)**	**Mainline Design Speed (km/hr)**	**Minimum Design Speed (km/hr)of Initial Curve (R_1)**
75	55	120	90
70	50	110	80
60	45	100	70
50	40	80	60
40*	30	60*	50

**C-D roads only*

MINIMUM DESIGN SPEED FOR INITIAL EXIT CURVE

Figure 37-6.G

HARD COPIES UNCONTROLLED

37-6.01(e) Gore Area

The gore area is normally considered both the paved triangular area between the through lane and the exit ramp, plus the graded area that extends a significant distance downstream beyond the gore nose; see Figure 37-6.H. The following definitions will apply:

1. Physical Nose. This is a point 100 ft (30 m) downstream of Section B-B from where the 16 ft (4.9 m) ramp width begins. As illustrated in Figure 37-6.H, the physical nose has a dimensional width of 6 ft 4 in. (1.94 m).

2. Gore Nose. This is the point where the paved shoulders separate from each other and the sodded area begins as the ramp and mainline diverge. As illustrated in Figure 37-6.H, the gore nose has a dimensional width of 20 ft 2¾ in. (6.3 m), which includes the 10 ft (3.0 m) right shoulder of the freeway and the 4 ft (1.2 m) paved left shoulder of the ramp.

Consider the following when designing the gore area:

1. Roadside Obstacles. Desirably, the area beyond the gore nose should be free of all obstacles (except the ramp exit sign) for at least 100 ft (30 m) or more beyond the gore nose. Any obstacles within approximately 350 ft (100 m) of the gore nose should be made breakaway or shielded by a barrier. See Chapter 38 for additional guidance for the treatment of roadside obstacles.

2. Curbing. Do not use curbing within the gore area of an exit terminal.

3. Side Slopes. Side slopes and ditches adjacent to the gore area should meet the same criteria as the mainline. The graded area beyond the gore nose should be as flat as practical, but still drain properly. The exit terminal should be located so there are no major elevation differences in this area. For some reconstruction projects, the vertical divergence of the ramp and mainline profiles may warrant protection for both roadways beyond the gore nose (e.g., guardrail and/or impact attenuators).

4. Cross Slopes. The paved triangular gore area between the through lanes and exit ramp should be flat and traversable. The cross slopes in the gore area from the physical nose to the gore nose are 3/16″/ft (1.5%). This design provides a drainage swale in the neutral area of the terminal and is shown in Figure 37-6.H.

5. Traffic Control Devices. Signing in advance of the exit and at the divergence should be according to the *ILMUTCD* and Bureau of Operations' *Policies and Procedures Manual*.

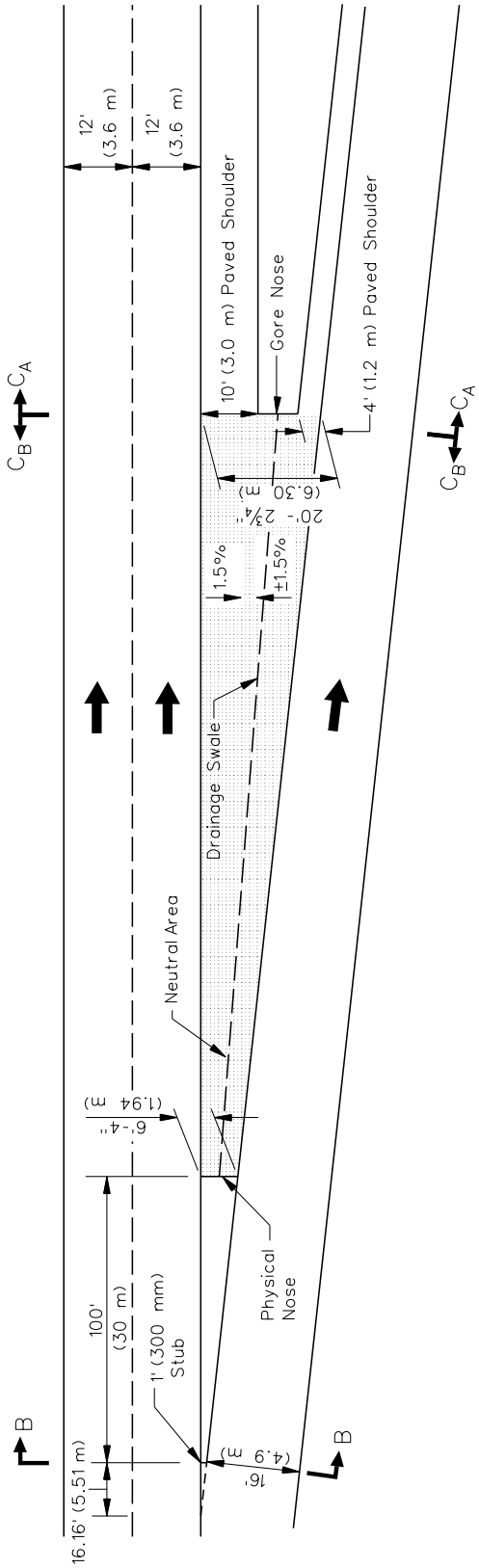

Note: Add drainage inlet in neutral area where required.

EXIT RAMP GORE AREA

FIGURE 37-6.H

HARD COPIES UNCONTROLLED

37-6.01(f) Structures

Exit ramp terminals on or near structures can create a split-bridge design which, because of safety, economic, and maintenance considerations, should be avoided. A split-bridge deck design may be required where the distance from the right edge of the mainline traveled way to the left edge of the ramp exceeds 36 ft (11 m). This results in a fixed object on the structure that must be shielded by an impact attenuator. The following, in order of preference, presents options for addressing this problem:

1. Physical Nose Beyond Structure. Figure 37-6.I(a) illustrates the desirable position of the exit ramp terminal on a structure. This position allows an appropriate perception and reaction distance between the structure and ramp gore nose. It also permits the placement of the 30 ft (9 m) bridge approach pavement to be coordinated with the preferred terminal construction.

2. Gore Nose on Structure. Figure 37-6.I(b) illustrates a single structure design with the exit ramp terminal positioned so that the distance between the mainline and ramp does not exceed 36 ft (11 m). Preferably, the structure should be placed upstream of the 36 ft (11 m) maximum offset.

3. Gore Nose on Split Structure. Figure 37-6.I(c) illustrates a split-bridge design which cannot be avoided due to the length and location of a structure. The designer must provide an impact attenuator for this special situation. For information on the required minimum impact attenuator area, see Section 38-8.

Figure 37-6.J illustrates the minimum position for an exit ramp terminal near an overhead structure. To achieve the optimized design and travel distance, locate the physical nose three seconds of travel time from the edge of the structure.

37-6.02 Entrance Ramps

37-6.02(a) Types

The entrance ramp terminal is a speed-change lane that permits ramp traffic to accelerate and merge with the high-speed traffic on the mainline. When designing the interchange, consider the following entrance ramp types:

1. Standard Entrance Terminal. There are two basic types of entrance freeway ramp terminals — the parallel design and the taper design. For all new and reconstructed ramps, use the taper design, except as noted in Section 37-6.02(b). Figure 37-6.K and the *Illinois Highway Standards* illustrate the standard entrance ramp terminal design used by the Department. Use this ramp design for all single-lane entrances where the level of service of the ramp terminal is equal to or greater than that of the mainline. Entrance ramp terminals may carry a marked route provided the marked route is not a freeway or expressway. Where a freeway or expressway merges at an interchange, use the major convergence design as discussed in Section 37-6.04.

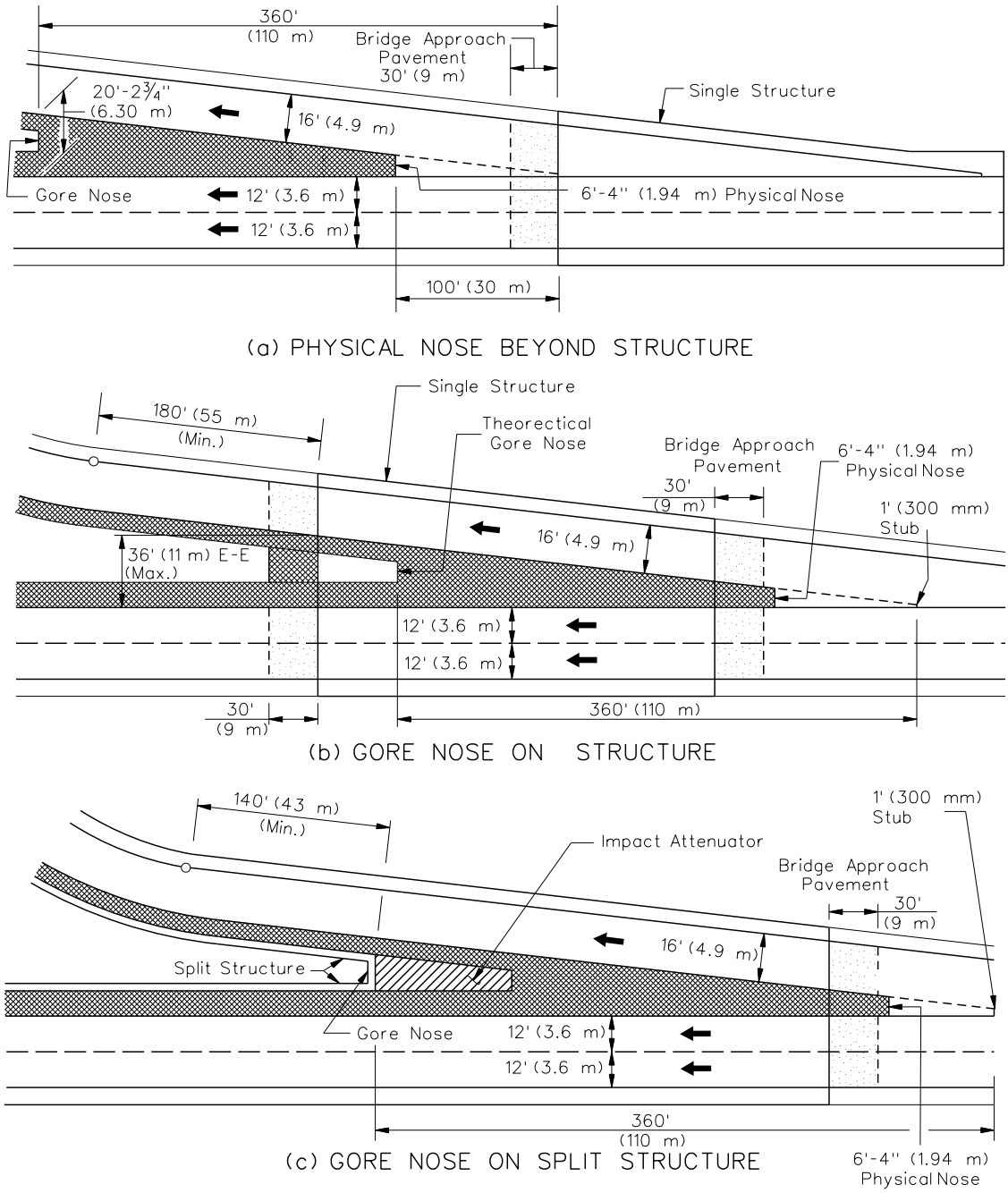

Note: Where an exit terminal is placed on a structure, the minimum cross slope is 1/4″/ft (2%). The 1/4″/ft (2%) is measured perpendicular to the edge of the mainline pavement, which will require a modification of the standard exit terminal profile.

EXIT TERMINALS ON STRUCTURES

Figure 37-6.I

HARD COPIES UNCONTROLLED

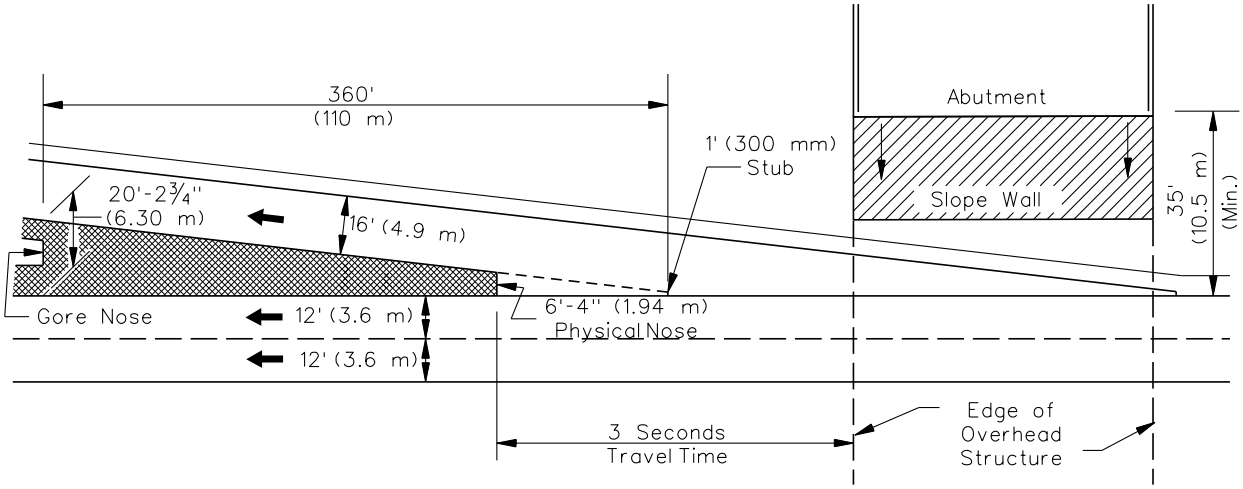

EXIT TERMINAL NEAR OVERHEAD STRUCTURE

Figure 37-6.J

2. Entrance Terminal with an Auxiliary Lane. An auxiliary lane may be required after the entrance terminal:

   - to meet the requirements in Section 37-2.05, and/or
   - where the entering traffic exceeds the appropriate service volume of a standard entrance terminal design but where a two-lane entrance ramp is not required.

   Figure 37-6.L illustrates the design criteria for an entrance terminal with an auxiliary lane. The final ramp radius typically is 760 ft (230 m), which requires a 200 ft (60 m) tangent section preceding the physical nose. Typically, the auxiliary lane should be at least 1000 ft (300 m). Where the final ramp radius is less than 760 ft (230 m), the length of the auxiliary lane will be based on the necessary acceleration distance as discussed in Section 37-6.02(b).

3. Two-Lane Entrances.. Where the entrance design traffic exceeds the service volume of a single-lane entrance ramp terminal with an auxiliary lane, it may be necessary to provide a two-lane entrance terminal as illustrated in Figure 37-6.M. Where a two-lane entrance ramp is required, an additional lane on the freeway is necessary to accommodate the additional traffic. This lane may be dropped 2500 ft (750 m) downstream or at the next interchange.

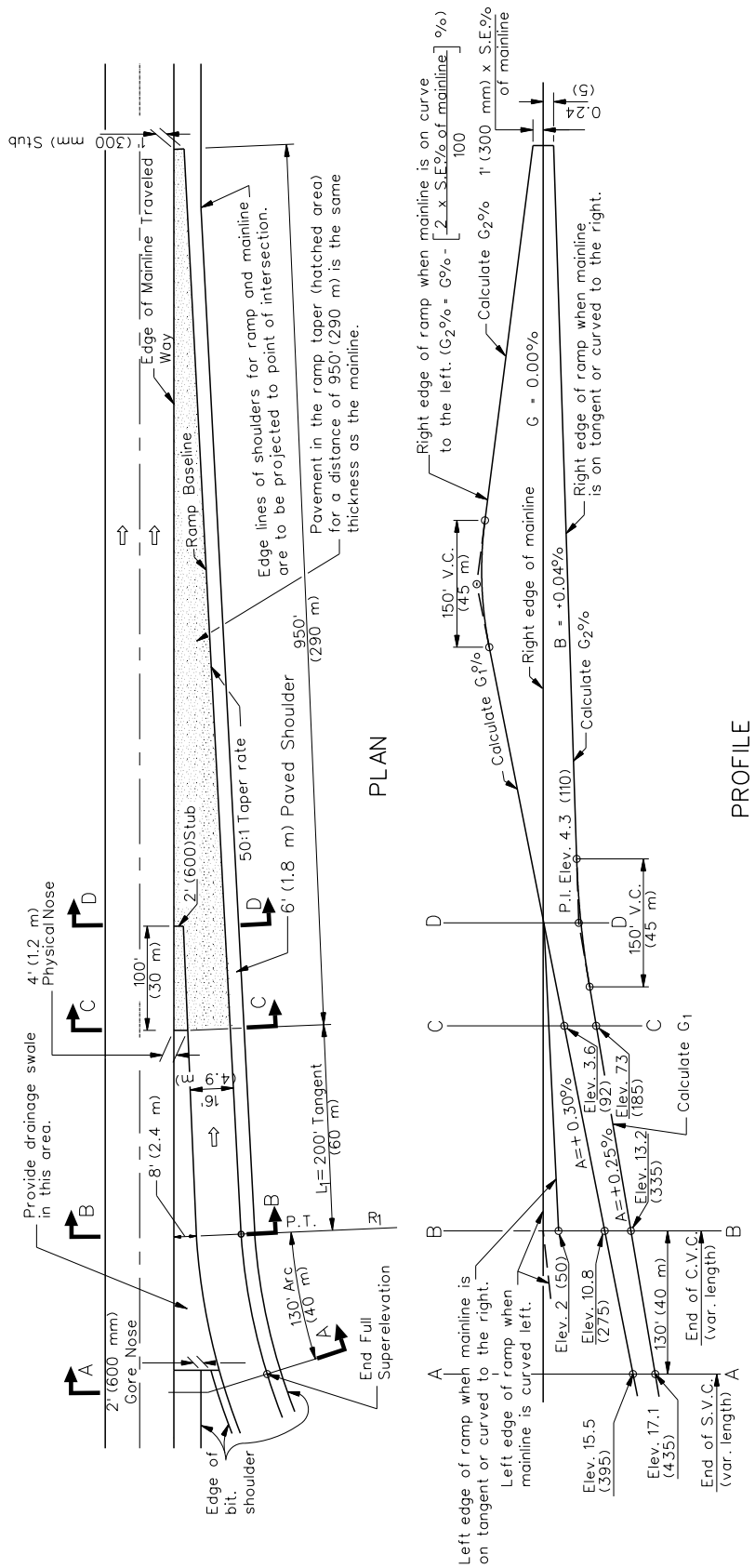

Notes:

1. *For values in %, divide by 100 to obtain vertical offsets. Vertical differences are in inches(mm).*
2. *Mainline grade is assumed to be 0%.*
3. *See* Highway Standards *for Sections B-B, C-C, and D-D.*

STANDARD ENTRANCE RAMP TERMINAL

Figure 37-6.K

HARD COPIES UNCONTROLLED

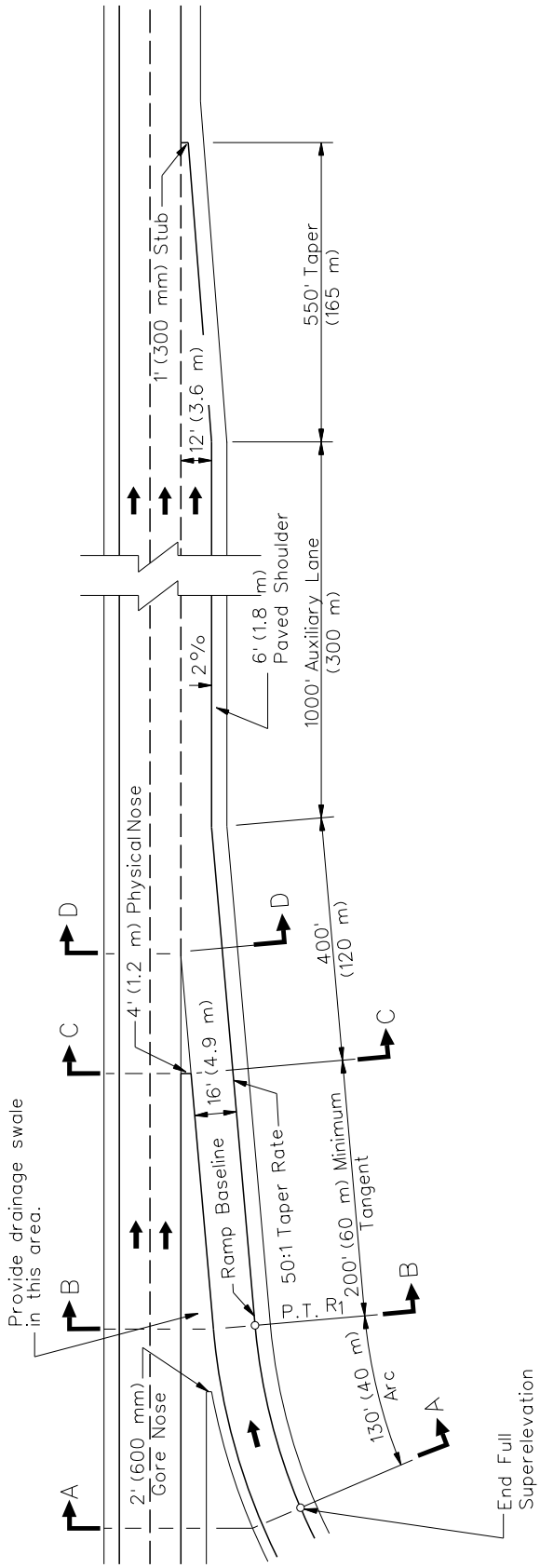

Notes:

1. *Include cross sections A-A, B-B, C-C, and D-D with the IDS.*
2. *See Figure 37-6.K for Standard Entrance Ramp Terminal.*

ENTRANCE RAMP TERMINAL WITH AUXILIARY LANE

Figure 37-6.L

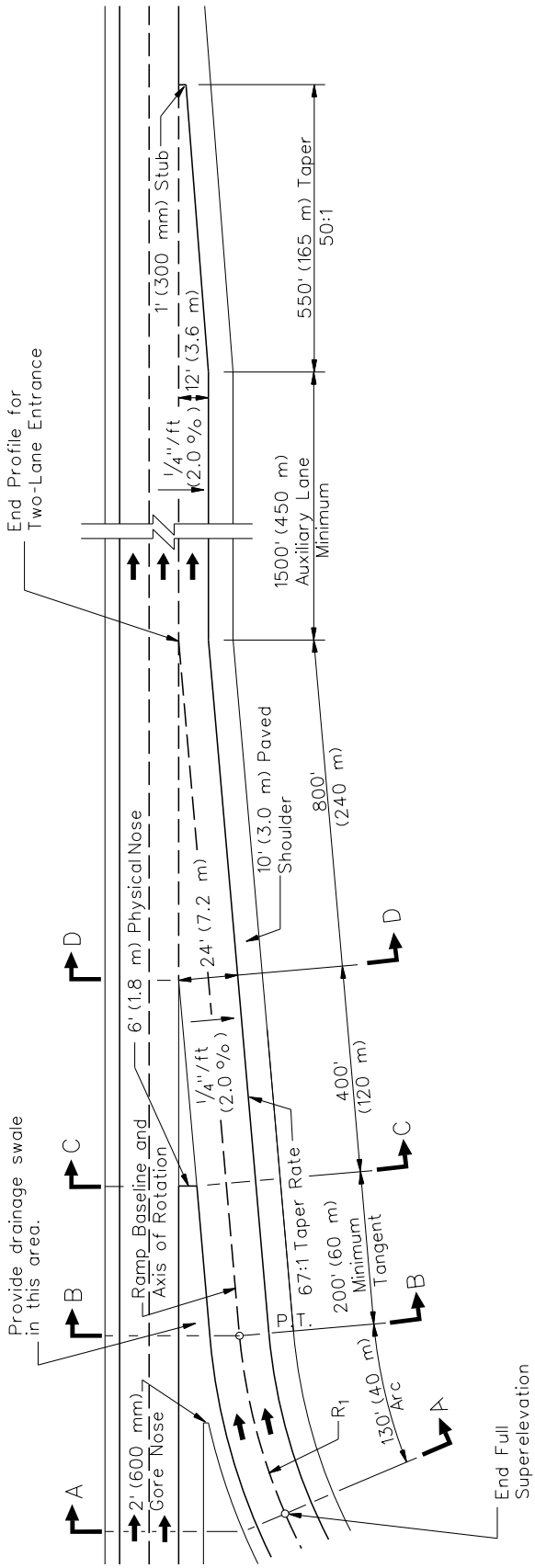

Note: Include cross sections A-A, B-B, C-C, and D-D with the IDS.

TWO-LANE ENTRANCE RAMP TERMINAL

Figure 37-6.M

HARD COPIES UNCONTROLLED

If the two-lane entrance is preceded by a two-lane exit ramp terminal, an increase in the basic number of lanes will generally not be required. In this case, the added lane that results from the two-lane entrance is considered an auxiliary lane. Note that this design violates lane balance guidelines discussed in Section 37-2.03. Where the demand volume of the entering traffic exceeds this design or where the entering roadway is a freeway or expressway, use the major convergence design as discussed in Section 37-6.04.

37-6.02(b) Length

Consider the following when determining the appropriate length of an entrance terminal:

1. Capacity. Where the mainline and ramp will carry traffic volumes approaching the design capacity of the merge area, consider using an auxiliary lane entrance ramp design as discussed in Section 37-6.02(a).

   Trucks. Where there are a significant number of trucks to impact the level of service on the freeway and ramp, acceleration lanes may need to be treated as truck-climbing lanes. The designer should reference the AASHTO publication *A Policy on Geometric Design of Highways and Streets* for truck acceleration rates. Typical areas where trucks might govern the ramp design include weigh stations, rest areas, truck stops, and transfer staging terminals. Also consider using truck acceleration criteria where there is substantial entering truck traffic and where the interchange crossroad has a high-skew angle or there is a significant crash history involving trucks attributable to an inadequate acceleration length.

2. Gradients. Where the gradient of the mainline and/or ramp exceeds +3%, the acceleration length may need to be adjusted. These adjustments are discussed in Section 36-2.03(e). For downgrades, use the standard entrance terminal design, and do not reduce the acceleration distance.

3. Horizontal Curves. The application of the acceleration criteria regarding horizontal curves preceding the entrance terminal are as follows:

   a. Design Speed. The design speed of the horizontal curve adjacent to an entrance terminal should be determined by open-roadway conditions. See Figure 37-4.F and Chapter 32.

   b. Curve Radii/Tangent Lengths. Figure 37-6.N provides the minimum controlling ramp curve radii (R_1) that should be used prior to the standard entrance terminal based on the mainline design speed.

4. Additional Lengths. If it has been determined that additional acceleration distance is required beyond that provided with the standard entrance terminal, the following options may be considered:

US Customary					
Mainline Design Speed (mph)					
	75	**70**	**60**	**50**	**40(2)(3)**
	Design Speed for R_1				
e_{max}	**55 mph**	**50 mph**	**45 mph**	**40 mph**	**30 mph**
6%	1060 ft	833 ft	643 ft	485 ft	231 ft
8%	960ft	758 ft	587 ft	444 ft	214 ft
Metric					
Mainline Design Speed (km/hr)					
	120	**110**	**100**	**80**	**60(2)(3)**
	Design Speed for R_1				
e_{max}	**90 km/hr**	**80 km/hr**	**70 km/hr**	**60 km/hr**	**50 km/hr**
6%	336 m	252 m	184 m	123 m	79 m
8%	304 m	229 m	168 m	113 m	73 m

Notes:

1. *R_1 is the radius of curve connecting to L_1 of the standard entrance terminal. See Figure 37-6.K.*

2. *Use with C-D Roads only.*

3. *100 ft (30 m) allowed for L_1 at this mainline design speed. See figure 37-6.K.*

MINIMUM CURVE RADII (R_1) FOR ENTRANCE TERMINALS

Figure 37-6.N

HARD COPIES UNCONTROLLED

a. Typical Design. If substantial additional distance is required for acceleration, use the auxiliary lane terminal design as shown in Figure 37-6.L.

b. Optional Design. If only a small additional distance is required to meet the necessary acceleration length, the additional distance may be gained by extending the L_1 distance. The designer must ensure that this will not create other undesirable aspects in the design of the ramp proper.

c. Low-Volume Conditions. Where existing volumes on the mainline are low and where the slower entering vehicles will not reduce the level of service on the mainline, the use of the standard entrance terminal may be considered. The speed profile of merging trucks onto the mainline must be investigated and documented. However, provide sufficient right-of-way so that an auxiliary lane can be added in the future.

d. Secondary Impacts. Before providing any additional acceleration lane length, the designer must consider its impacts (e.g., additional construction costs, wider structures, right-of-way impacts).

37-6.02(c) Sight Distance

Decision sight distance desirably should be provided for drivers on the mainline approaching an entrance terminal. They need sufficient distance to see the merging traffic and adjust their speed or change lanes to allow the merging traffic to enter the freeway. Likewise, drivers on the entrance ramp need to see a sufficient distance to locate gaps in the traffic stream for merging. Section 31-3 discusses decision sight distance in more detail.

37-6.02(d) Superelevation and Cross Slopes

Standard entrance terminal designs have been developed to include appropriate superelevation transitions and desirable crossover crown conditions where the terminal connects onto the mainline; see Figure 37-6.K and the *Highway Standards*. When an IDS is prepared, develop and show on the IDS the detailed cross section at A-A as indicated in Figure 37-6.K.

37-6.02(e) Gore Area

The following presents the nose criteria for entrance gores:

1. Physical Nose. This is a point located at Section C-C, as illustrated in Figure 37-6.K and has a dimensional width of 4 ft (1.2 m).

2. Gore Nose. This is a point where the sodded area ends and the paved shoulders connect. The gore nose, excluding the mainline right shoulder and ramp left shoulder, is 2 ft (600 mm) wide as shown in Figure 37-6.K.

37-6.03 Ramp/Roadway Divergence Applications

37-6.03(a) Major Divergences

Where two freeways separate, provide a major divergence as shown in Figures 37-6.O, 37-6.P, and 37-3.Q. The most important concept in the use of a major divergence is that if the route turns at an interchange, the physical divergence of the roadways should also occur in the same direction. To maintain lane balance, an additional interior lane will be required preceding the divergence. The widening of the interior lane from 12 ft to 24 ft (3.6 m to 7.2 m) should occur in a distance of 1000 ft (300 m). This provides a driver in the center lane the option of selecting either direction of travel without having to change lanes.

Add additional lanes to the side of the lesser-preferred route. Check for lane balance. Pavement joints should normally favor the freeway with the higher volume of traffic. An exception to this rule is that in most cases, regardless of the traffic volume split, the Interstate is considered the preferred route. Provide a minimum tangent length of 200 ft (60 m) beyond the 6 ft (1.8 m) physical nose to facilitate a change of cross slope preceding the initial curve of any diverging roadway.

Where a major divergence is required but the preferred design of an equal split of the roadways cannot be achieved due to the existing freeway alignment, a modified divergence design can be used as shown in Figure 37-6.P. In addition, where a divergence design is required and sufficient right-of-way is not available to build the one-sided divergence and where the diverging traffic volume is not significant, a two-lane exit terminal design may be considered. However, before using the two-lane exit design, coordination and approval must be received from BDE.

37-6.03(b) Minor Divergences

Consider a minor divergence for the following situations; see Figure 37-6.R:

- where a highway terminates into separate single lane ramps (e.g., at a trumpet interchange);
- where a ramp or roadway separates within a complex interchange (e.g., directional interchanges); or
- as part of a collector-distributor roadway design.

37-6.04 Ramp/Roadway Convergence Applications

37-6.04(a) Major Convergences

Where two freeways merge, provide a major convergence design as illustrated in Figure 37-6.S. The number of lanes downstream from the convergence generally will be one less than the combined total of the two approaching roadways. Under some circumstances, traffic demand may require that the number of lanes departing the merge area be the same number as the two approaching roadways.

HARD COPIES UNCONTROLLED

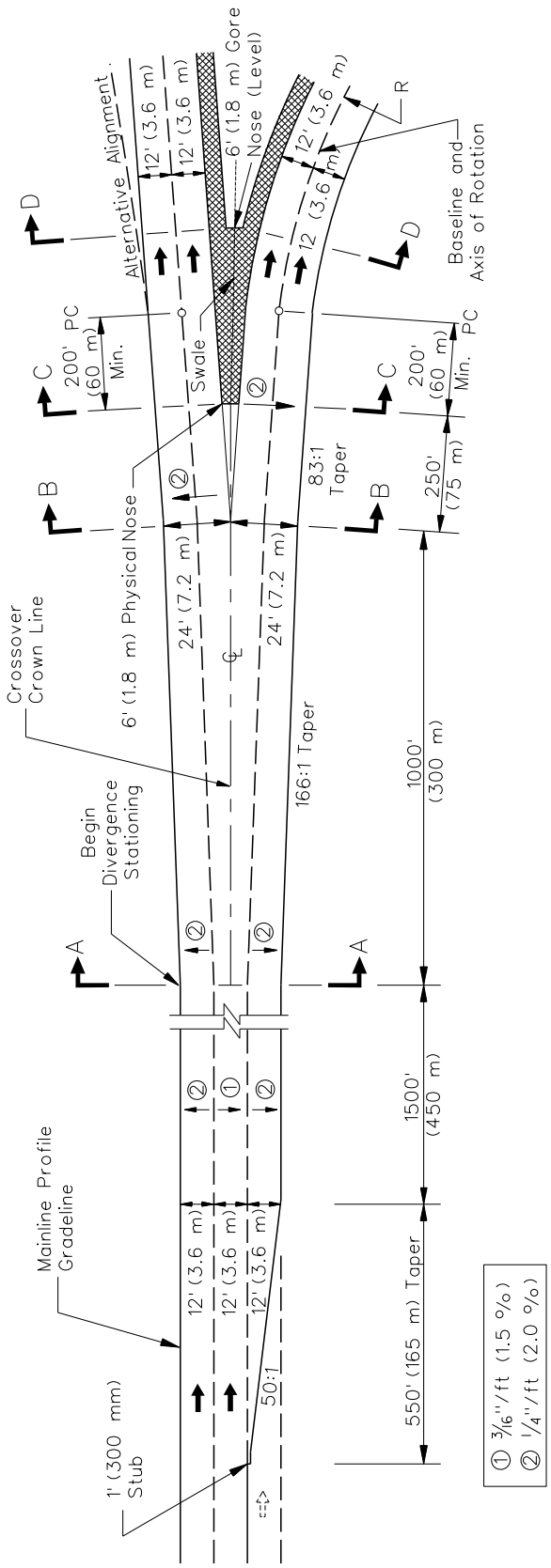

Notes:

1. *Develop cross sections A-A, B-B, C-C, and D-D during the preparation of the IDS.*
2. *The divergence can be designed to divert traffic from either side of an existing roadway.*
3. *Full superelevation is attained at Section D-D.*

EQUAL-SPLIT MAJOR DIVERGENCE
(Two- or Three-Lane Approaching Roadway with Two-Lane Roadways Diverging)

Figure 37-6.O

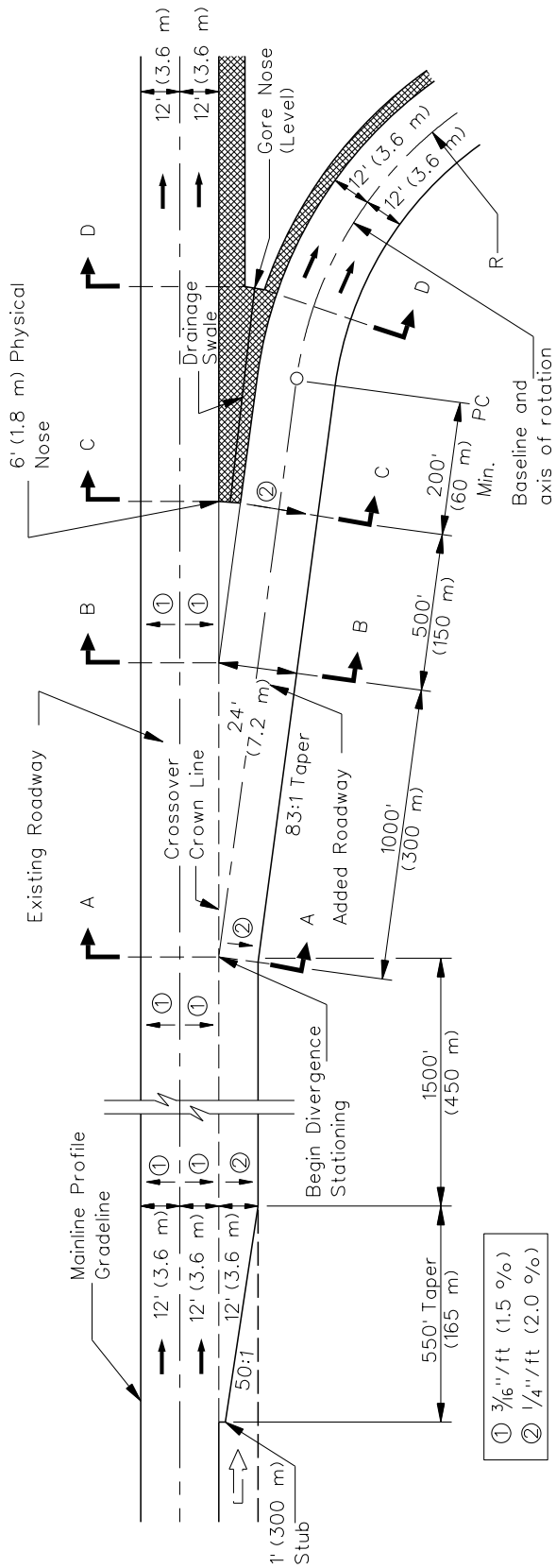

Notes:

1. *Develop cross sections A-A, B-B, C-C, and D-D during the preparation of the IDS.*
2. *The divergence can be designed to divert traffic from either side of an existing roadway.*
3. *Full superelevation is attained at Section D-D.*

ONE-SIDED MAJOR DIVERGENCE
(Two- or Three-Lane Approaching Roadway with Two-Lane Roadway Diverging)

Figure 37-6.P

HARD COPIES UNCONTROLLED

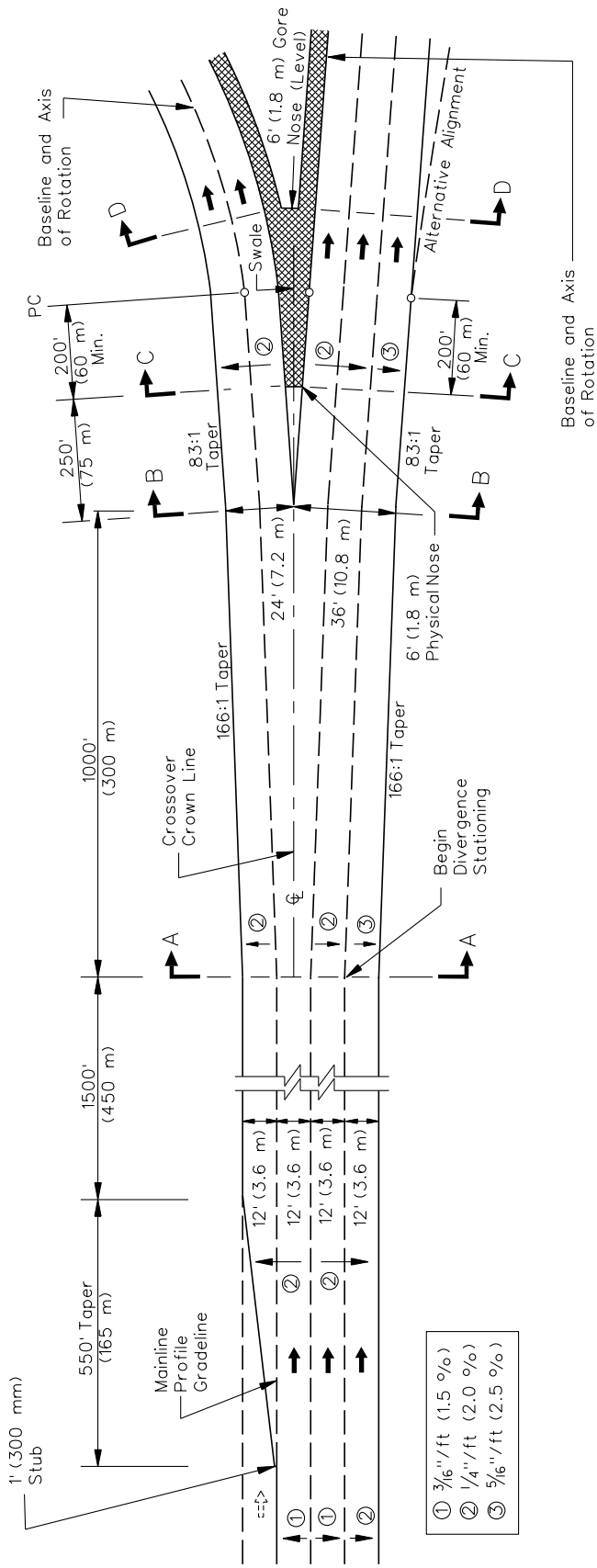

Notes:

1. *Develop cross sections A-A, B-B, C-C, and D-D during the preparation of the IDS.*
2. *The divergence can be designed to divert traffic from either side of an existing roadway.*
3. *Where a horizontal curve is provided downstream from the divergence, full superelevation is attained at Section D-D.*

MAJOR DIVERGENCE
(Three- or Four-Lane Approaching Roadway with Two- and Three-Lane Roadways Diverging)

Figure 37-6.Q

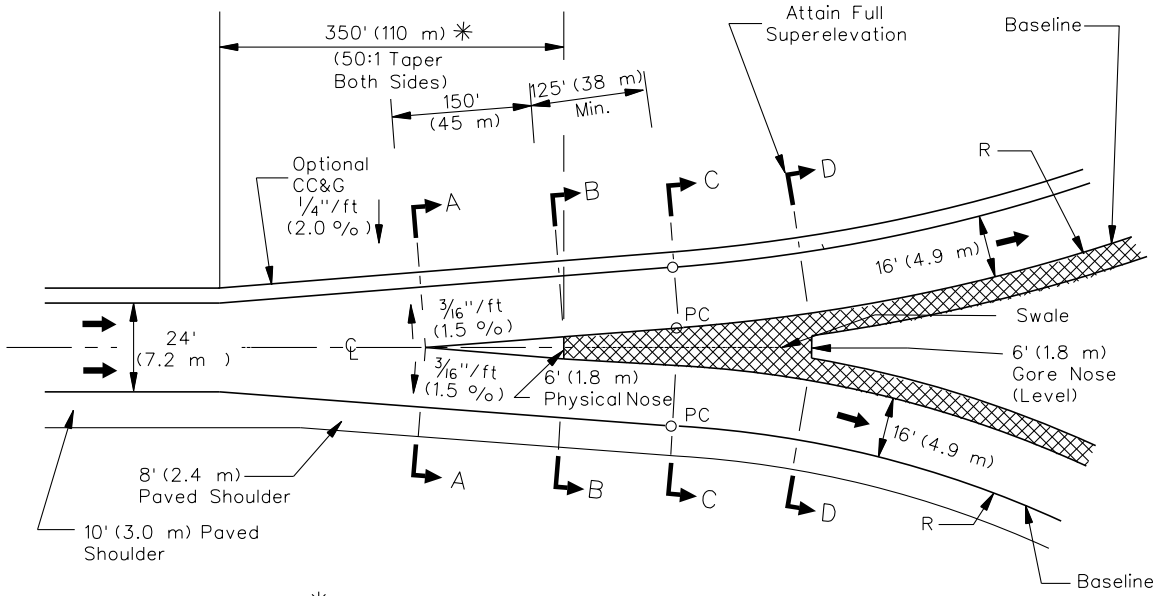

✳ When one side is tangent, use 420' (130 m) (30:1 taper).

TYPE A - 24 ft (7.2 m)

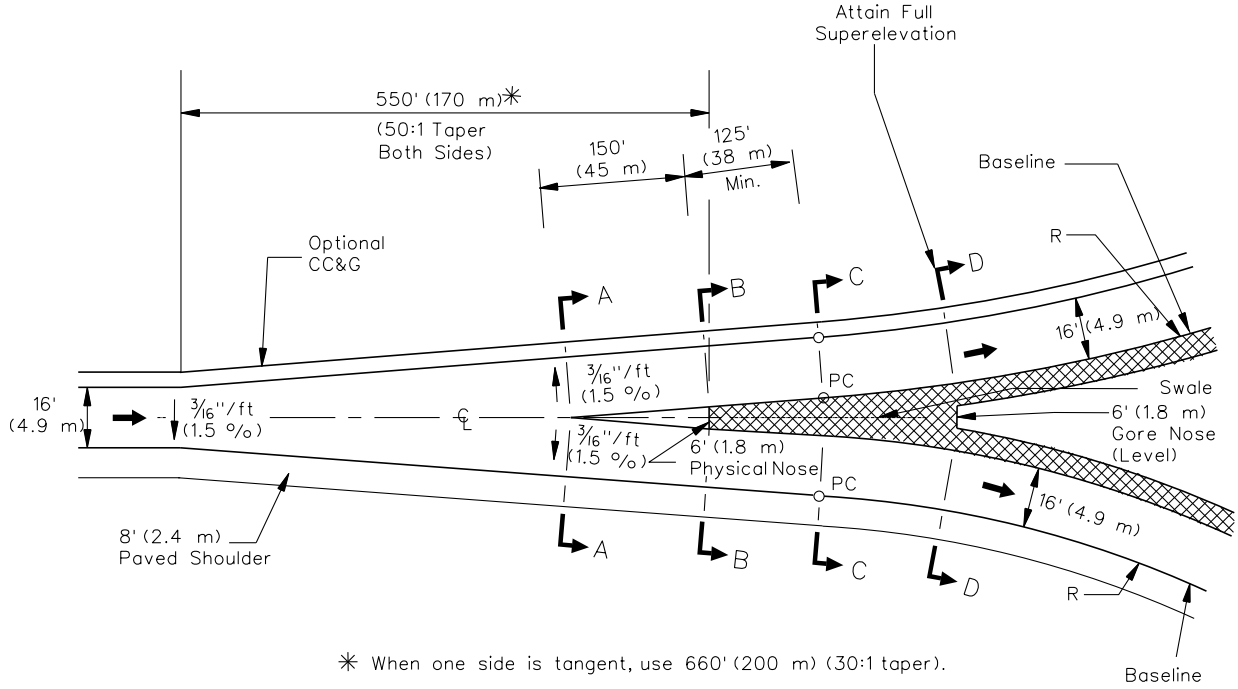

✳ When one side is tangent, use 660' (200 m) (30:1 taper).

TYPE B - 16 ft (4.9 m)

Note: Develop cross sections A-A, B-B, C-C, and D-D during the preparation of IDS.

MINOR DIVERGENCES

Figure 37-6.R

HARD COPIES UNCONTROLLED

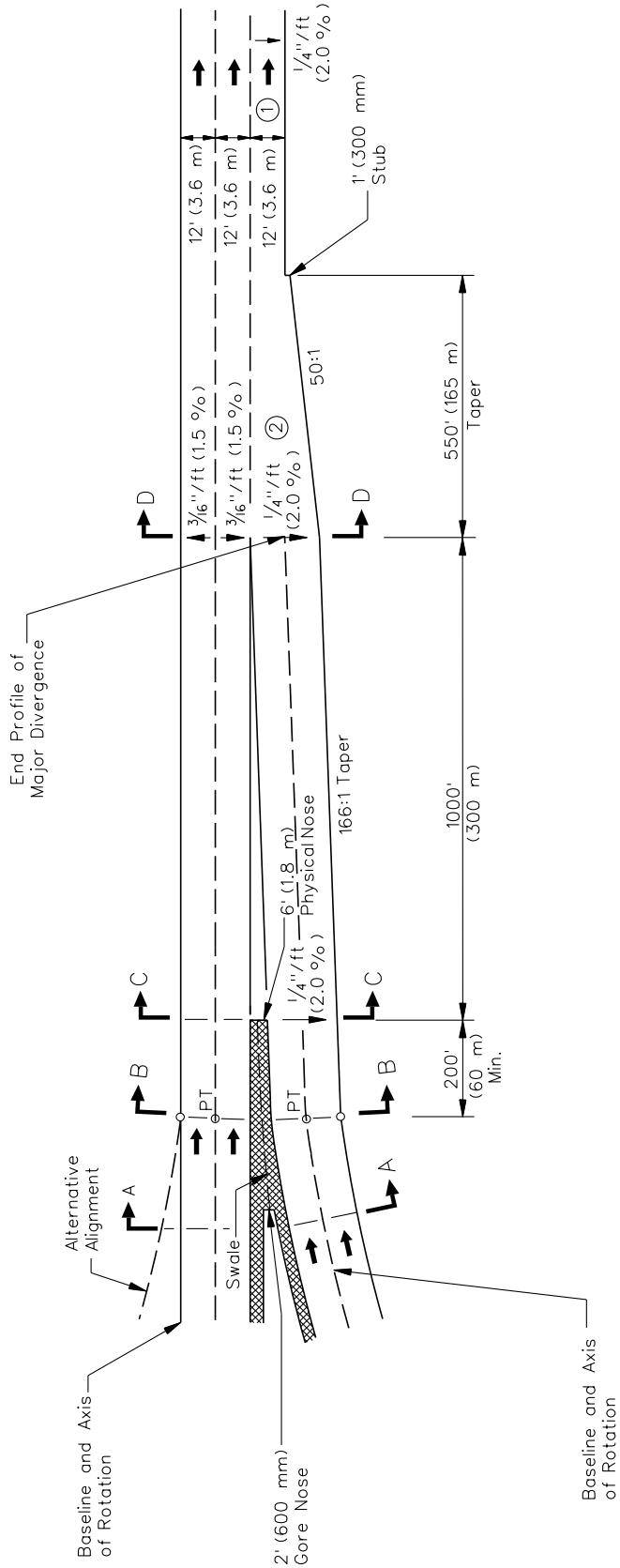

Notes:

1. *If the right-hand lane is proposed to be dropped for capacity reasons, provide a minimum 1500 ft (450 m) auxiliary lane and a 550 ft (165 m) taper.*
2. *The convergence can be designed to merge from either side.*
3. *Develop cross sections A-A, B-B, C-C, and D-D during the preparation of IDS.*

MAJOR CONVERGENCE

Figure 37-6.S

HARD COPIES UNCONTROLLED

Typically, a lane drop will be required downstream from the convergence. The most desirable and typical design will be to drop the right slow-speed lane versus the left high-speed lane. However, it also may be desirable to drop the left lane of the merging roadway if it is serving the lowest volume per lane. This design should be reviewed during the development of the IDS.

37-6.04(b) Minor Convergences

Consider a minor convergence for the following situations; see Figure 37-6.T:

- where interchange ramps converge to form either a single or double lane roadway (e.g., trumpet interchanges) within complex interchanges; or
- as part of a collector-distributor roadway design.

HARD COPIES UNCONTROLLED

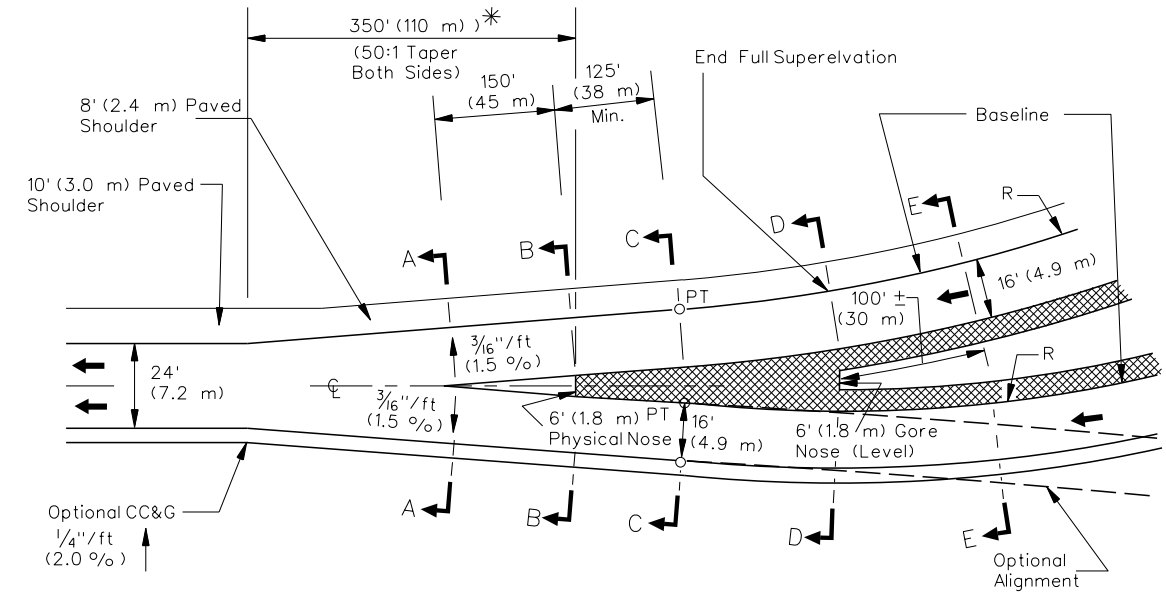

✳ When one side is tangent, use 420' (130 m) (30:1 taper)

TYPE A - 24 ft (7.2 m)

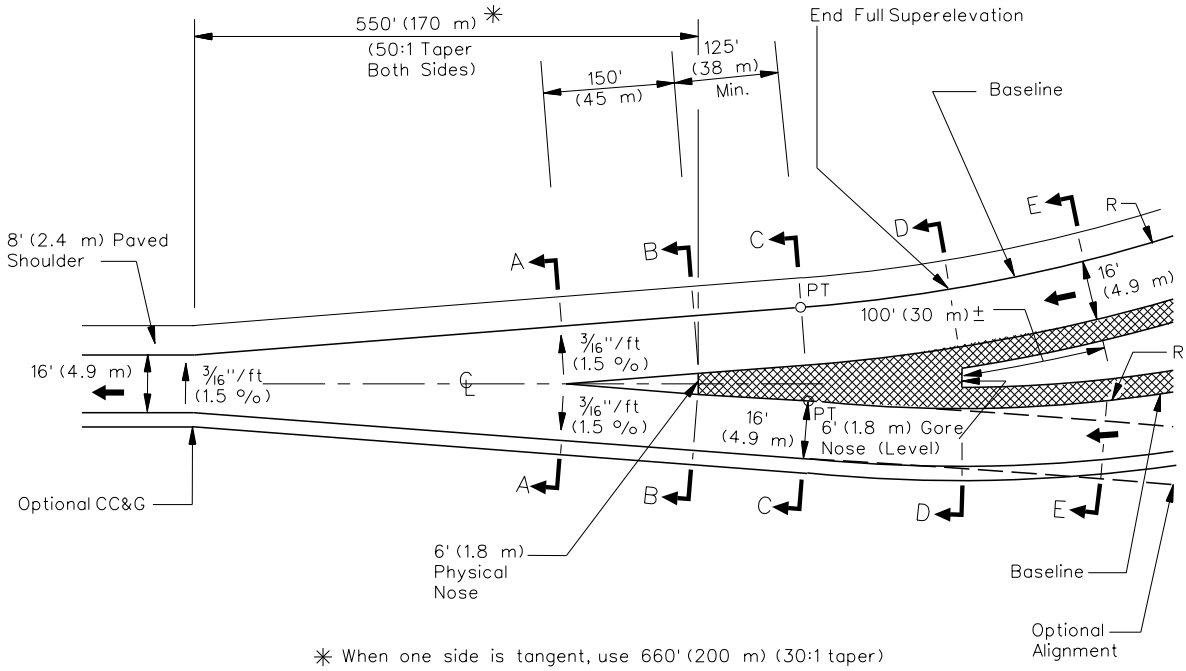

✳ When one side is tangent, use 660' (200 m) (30:1 taper)

TYPE B - 16 ft (4.9 m)

Notes:

1. *Develop cross sections A-A, B-B, C-C, D-D, and E-E during the preparation of IDS.*
2. *Ramp cross slope should be determined by downstream horizontal alignment.*

MINOR CONVERGENCES

Figure 37-6.T

HARD COPIES UNCONTROLLED

37-7 REFERENCES

1. *A Policy on Geometric Design of Highways and Streets*, AASHTO, 2018.
2. Agreement Relating to Use of and Access to Rights-of-Way – Interstate System, 23 U.S.C. 111.
3. Design Standards for Highways, 23 CFR 625, November 1, 2018,
4. *Policy on Access to the Interstate System,* FHWA, May 22, 2017.
5. A Policy on Design Standards – Interstate System, AASHTO, May, 2016.
6. Additional Interchanges to the Interstate System,55 Fed. Reg. 42570, October 22, 1990.
7. Additional Interchanges to the Interstate System,63 Fed. Reg. 7045, February 11, 1998.
8. Access to the Interstate System,74 Fed. Reg. 43743, August 27, 2009.
9. Access Control on Non-Interstate NHS Freeways, FHWA Memorandum, December 8, 1997.
10. *Single Point Urban Interchange Design and Operations Analysis*, NCHRP Report 345, Transportation Research Board, 1991.
11. "A Comparison of Two Diamond Interchange Forms in Urban Areas", *ITE Journal*, May 1989.
12. "An Operational Comparison of the Single-Point Urban and Tight-Diamond Interchanges", *ITE Journal*, April 1993.
13. *Guidelines for Preliminary Selection of the Optimum Interchange Type for Specific Location*, FHWA/VTRC99-R15, January 1999.
14. *Highway Capacity Manual* 2010, Transportation Research Board, 2010.
15. *Highway Safety Design and Operations Guide*, AASHTO, 1997.
16. *Distance Requirements for Frontage-Road Ramps to Cross Streets*: Urban Freeway Design" Transportation Research Record 682, Transportation Research Board, 1978.
17. *Capacity and Quality of Service of Weaving Zones*, NCHRP 3-55(5), Transportation Research Board, November 2007.
18. *Manual on Uniform Traffic Control Devices*, FHWA, ATSSA, AASHTO, and ITE, 2009.
19. *Interchange Operations on the Local Street Side: State of the Art*, Transportation Research Circular 430, Transportation Research Board, 1994.

20. *Geometric Design Features of Single-Point Urban Interchanges* Transportation Research Record 1385, Transportation Research Board, 1993.

21. "Interchange Ramp Geometrics — Alignment and Superelevation Design," Transportation Research Record 1385, Transportation Research Board, 1993.

22. *Illinois Highway Standards*, IDOT, current edition.

23. *Diverging Diamond Interchange Informational Guide*, FHWA, August 2014.

24. "Driver's Evaluation of the Diverging Diamond Interchange", *FHWA Techbrief*, FHWA-HRT-07-048, January 2017.

HARD COPIES UNCONTROLLED