Chapter Forty-four

RURAL AND URBAN FREEWAYS (New Construction/Reconstruction)

BUREAU OF DESIGN AND ENVIRONMENT MANUAL

Chapter Forty-four
RURAL AND URBAN FREEWAYS

Table of Contents

Section **Page**

44-1 GENERAL 44-1.1

44-1.01 Establishing A Freeway 44-1.1
44-1.02 Design Studies 44-1.2

44-2 DESIGN ELEMENTS 44-2.1

44-2.01 Design Speed 44-2.1
44-2.02 Alignment 44-2.1
44-2.03 Cross Sections 44-2.2

44-2.03(a) Lane and Shoulder Widths 44-2.2
44-2.03(b) Typical Sections 44-2.3

44-2.04 Medians 44-2.3

44-2.04(a) General 44-2.3
44-2.04(b) Median Crossovers 44-2.3

44-2.05 Frontage Roads/Service Drives 44-2.11

44-2.05(a) General 44-2.11
44-2.05(b) Design Criteria 44-2.11
44-2.05(c) One-Way/Two-Way 44-2.17
44-2.05(d) Outer Separation 44-2.17

44-2.06 Lane Drops 44-2.20
44-2.07 Roadside Safety 44-2.23
44-2.08 Branch Connections/Major Forks 44-2.23
44-2.09 Overhead Signing 44-2.23

44-3 OTHER DESIGN FEATURES 44-3.1

44-3.01 Access Control 44-3.1

44-3.01(a) General 44-3.1
44-3.01(b) Access Control Line 44-3.1

44-3.02 HOV Lanes 44-3.9

44-3.02(a) General 44-3.9
44-3.02(b) Types of HOV Lanes 44-3.9
44-3.02(c) Design 44-3.13

HARD COPIES UNCONTROLLED

Table of Contents
(Continued)

Section **Page**

44-3.03 Lighting 44-3.15
44-3.04 Landscaping 44-3.16

44-4 INTERCHANGES/GRADE SEPARATIONS 44-4.1

44-4.01 Interchanges 44-4.1
44-4.02 Grade Separations 44-4.1

44-4.02(a) Justification 44-4.1
44-4.02(b) Design 44-4.2

44-4.03 Feasibility Analysis 44-4.6

44-4.03(a) Procedure 44-4.6
44-4.03(b) Example Problem 44-4.10

44-5 TABLES OF DESIGN CRITERIA 44-5.1

44-6 SINGLE INTERSTATE ROUTING FOR SELECTED URBAN AREAS 44-6.1

44-7 REFERENCES 44-7.1

Chapter Forty-four
RURAL AND URBAN FREEWAYS

Freeways are functionally classified as Principal Arterials and are constructed with full control of access. Freeways are intended to provide high levels of safety and efficiency in moving high volumes of traffic at high speeds. The operational efficiency, capacity, safety, and cost of the highway facility are largely dependent upon its design. Chapter 44 provides guidance in the design of freeways including specific design criteria, frontage roads, lane drops, justification for grade separations, access control along the freeway, and safety. Information that is also applicable to freeways is included in the following chapters:

- Chapter 11 discusses the procedures for determining the freeway location.
- Chapter 15 discusses interchange type and design studies.
- Chapters 31, 32, 33, 34, and 39 provide guidance on the geometric design elements that are also applicable to freeways.
- Chapter 35 provides guidelines for access control along interchange crossroads. It also discusses the procedures for preparing access control plans.
- Chapter 37 discusses the type, location, and design of interchanges.
- Chapter 38 provides guidelines on roadside safety issues that are also applicable to freeways.

44-1 GENERAL

44-1.01 Establishing a Freeway

Highways are established as freeways where they either comprise a portion of a system (e.g., National System of Interstate and Defense Highways) or where there is a need for access control over the entire or a portion of the highway. According to 605 ILCS 5/8-101 of the *Illinois Highway Code*, once it has been determined to control the access on a particular highway, it will be necessary to designate and establish the highway as a freeway. This action is initiated after the design of the freeway is approved and once approval is received on environmental reports.

When establishing a freeway, the district will need to prepare an Order Establishing a Freeway; see Chapter 12. The Order Establishing a Freeway is a legal declaration made by the Department designating a highway as a freeway and delineating the extent of the freeway. The Order contains a legal description of the freeway referenced to section corners, townships, and ranges. The Order must also include the limits along the mainline and specific limits on all crossroads at interchanges. The Order Establishing a Freeway is approved by the Secretary of the Department and attested by the Director of Program Development.

In addition to filing an Order Establishing a Freeway, the district should also consider filing a Corridor Protection Map. The procedures for this process are discussed in the *Land Acquisition Policies and Procedures Manual*.

44-1.02 Design Studies

Chapter 11 discusses the procedures for designing the freeway's alignment and profile through a corridor. When developing a freeway alignment, first determine the type and location of interchanges. Then develop the freeway alignment between the interchanges. Other factors that determine the freeway alignment include:

- the location of grade separations, including major river crossings;
- access control along the freeway and along interchange crossroads;
- topography;
- environmental restrictions; and
- property lines and right-of-way restrictions.

HARD COPIES UNCONTROLLED

44-2 DESIGN ELEMENTS

44-2.01 Design Speed

Figures 44-5.A, 44-5.B, and 44-5.C provide the range of design speeds for freeways. This range is dependent upon whether the project is rural or urban, new construction or reconstruction, or if the design element can remain in place. See Figures 44-5.B and 44-5.C and Figure 50-2.B for guidance on curves to remain-in-place.

44-2.02 Alignment

Designed for high-volume and high-speed operations, freeways should have smooth-flowing horizontal and vertical alignments. Proper combinations of curvature, tangents, grades, variable median widths, and separate roadway elevations all combine to enhance safety and aesthetics of freeways. When laying out freeway alignments, consider the following guidelines:

1. Horizontal Alignment. Consider the following guidelines when laying out the horizontal alignment:

   - Use large radius curves.
   - Only use minimum radii where it is necessary due to restricted conditions.
   - Avoid alignments that require superelevation transitions on bridges or bridge approach slabs. See Section 32-3.07 for additional guidance on the location of horizontal curves near bridges.

2. Vertical Alignment. Even though the profile may satisfy all design controls, the use of minimum criteria may appear forced and angular. Therefore, with freeways, use values greater than the minimum criteria to produce a smoother, more aesthetically pleasing alignment.

3. Horizontal and Vertical Combinations. Consider the relationship between horizontal and vertical alignments simultaneously to obtain a desirable condition. Chapter 33 discusses this relationship in detail and its effect on aesthetics and safety.

4. Freeway River Crossings. During the development of freeways, the alignment may need to cross major rivers or streams. In selecting the location for a bridge site, consider the following guidelines:

   a. Crossing Angle. Cross the river at a nearly right angle to minimize the length of the main span.

   b. Bluffs. If a bluff exists adjacent to the river, attempt to locate one of the abutments on a bluff closest to the river. This will minimize the overall length of the bridge and, therefore, reduce the cost of the structure.

c. River Bends. Avoid locating the bridge on a bend in the river. Locating a bridge on a bend may result in unnecessarily long spans and may increase the chance of the main river piers being hit by barges.

d. Freeway Alignment. Examine how the freeway alignment will tie into the ends of the bridge. Approach horizontal and vertical alignments can significantly improve the aesthetics of the bridge location. Make every effort to avoid placing horizontal curves and superelevation transitions on the bridge.

e. Foundation Conditions. Investigate the soil conditions at each bridge abutment and the depth of bedrock at each pier location. Poor foundation conditions may limit possible bridge sites.

f. Existing Structures. Existing structures may limit the location of a new bridge. Provide sufficient separation between structures to avoid logjams during spring flooding, ice jams in the winter, accommodate barge traffic, and ease construction.

g. Environmental Considerations. Avoid or minimize environmentally or historically sensitive areas wherever practical in conjunction with the above guidelines.

5. Interchanges. When developing the alignment and profile of freeways near proposed interchanges, see Section 37-2.14 for detailed guidelines.

6. Climbing Lanes. For most freeways, climbing lanes will not be warranted. However, if the drop in the level of service is significant, a climbing lane may be required. Section 33-3 discusses the warrants and design criteria for climbing lanes.

44-2.03 Cross Sections

44-2.03(a) Lane and Shoulder Widths

Section 44-5 provides the minimum lane and shoulder widths for freeways. Under very restricted conditions and with an approved design exception, the designer may consider the following:

1. Widths. Lane widths of 11 ft (3.3 m) may be acceptable for reconstruction projects.

2. Shoulders to Travel Lanes. Converting shoulders to travel lanes for additional capacity through short sections may reduce congestion-related crashes. However, converting shoulders to travel lanes for several miles (kilometers) generally does not reduce crashes. Where shoulders are converted to travel lane(s), use of the left shoulder is preferable to the right shoulder.

3. Shoulder Widths. Where reduced shoulder widths are provided, consider incorporating the following mitigation factors:

HARD COPIES UNCONTROLLED

- adding advisory and regulatory signing,
- constructing frequent emergency pull-outs,
- using changeable overhead message signs,
- providing continuous lighting,
- incorporating truck-lane restrictions, and/or
- setting up dedicated service patrols and other incident management measures.

44-2.03(b) Typical Sections

Figures 44-2.A through 44-2.F illustrate typical cross sections for various freeway designs. Figure 44-2.G illustrates two options for converting a freeway from two lanes in each direction to four lanes in each direction.

44-2.04 Medians

44-2.04(a) General

Freeway medians should be as wide as economic, operational, and environmental considerations will permit. See for Section 34-3 for guidance on medians. Freeways generally have depressed medians in rural areas and in urban areas where right-of-way is restricted, flush medians with concrete barriers. Section 44-5 provides the minimum median width criteria for freeways. Median widths of 100 ft (30 m) or more allow for the development of independent alignments.

For reconstruction projects with narrow medians, a median barrier usually will be required between the roadways. See Section 38-7 for guidelines for median barrier selection and warrants.

44-2.04(b) Median Crossovers

Permanent crossovers are only provided on freeways for emergency and/or maintenance purposes. During the development of the design study, the district should coordinate with the Bureau of Operations, the State Police, and the district maintenance personnel to determine where crossovers will be required. For guidance on determining the location and design of crossovers, see the Bureau of Operations *Manual of Maintenance Policies*.

For guidance on retaining construction median crossovers, see Section 55-2.12.

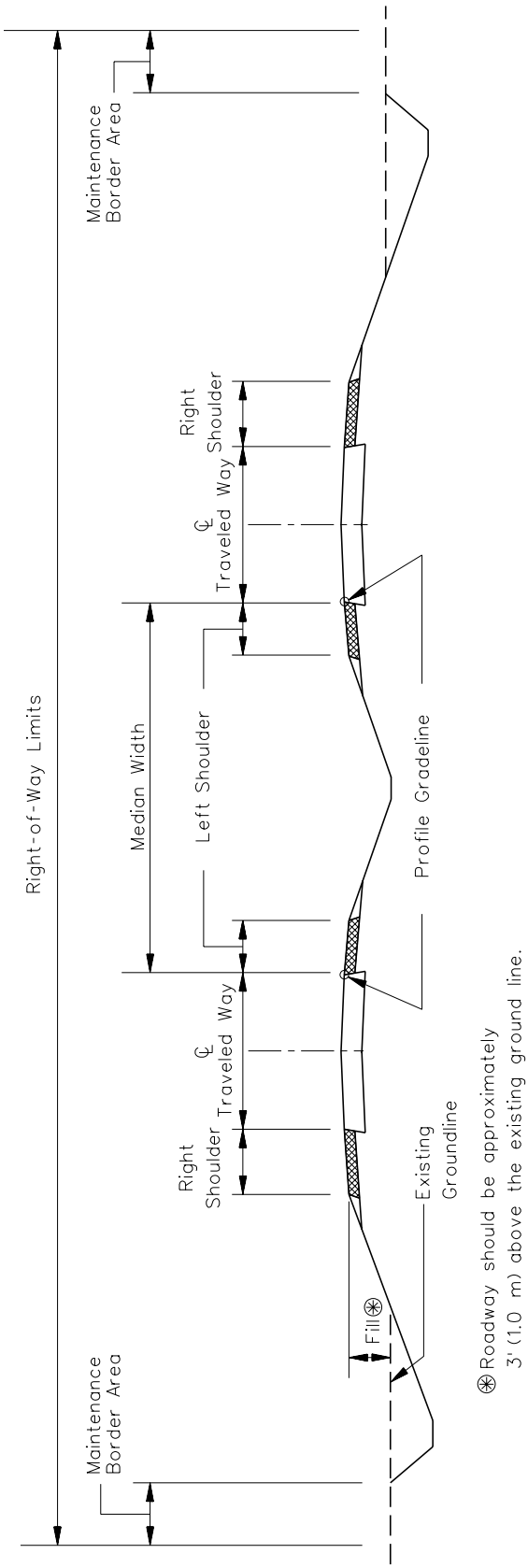

TYPICAL SECTION FOR FOUR-LANE FREEWAY (Depressed Median)

Figure 44-2.A

HARD COPIES UNCONTROLLED

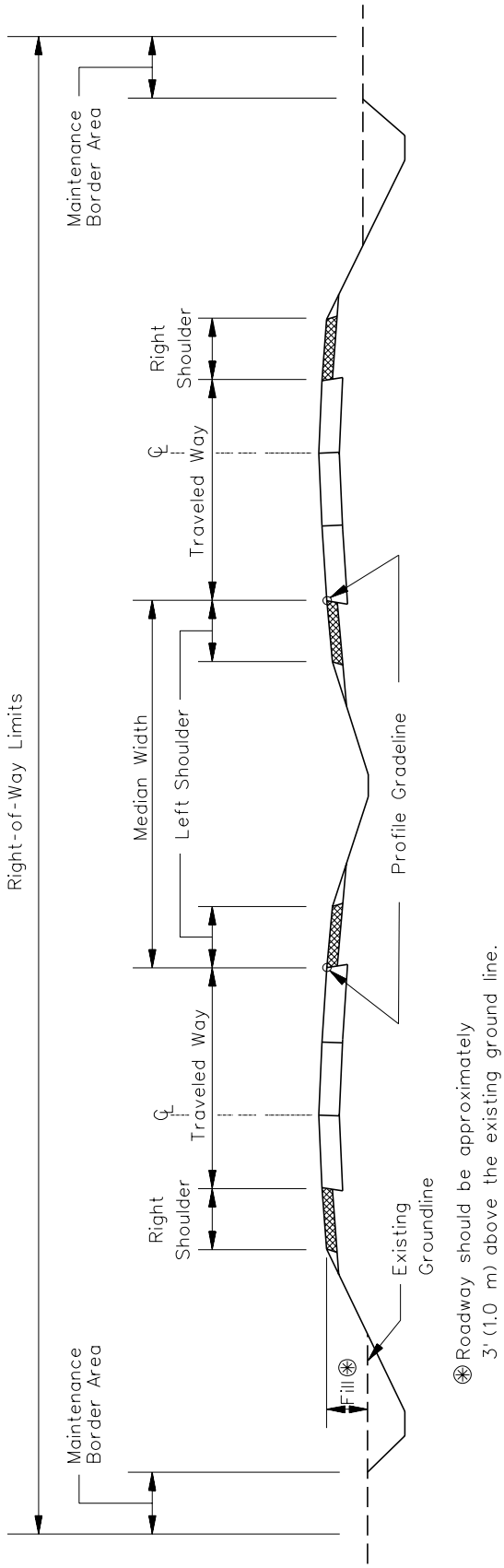

TYPICAL SECTION FOR SIX-LANE FREEWAY (Depressed Median)

Figure 44-2.B

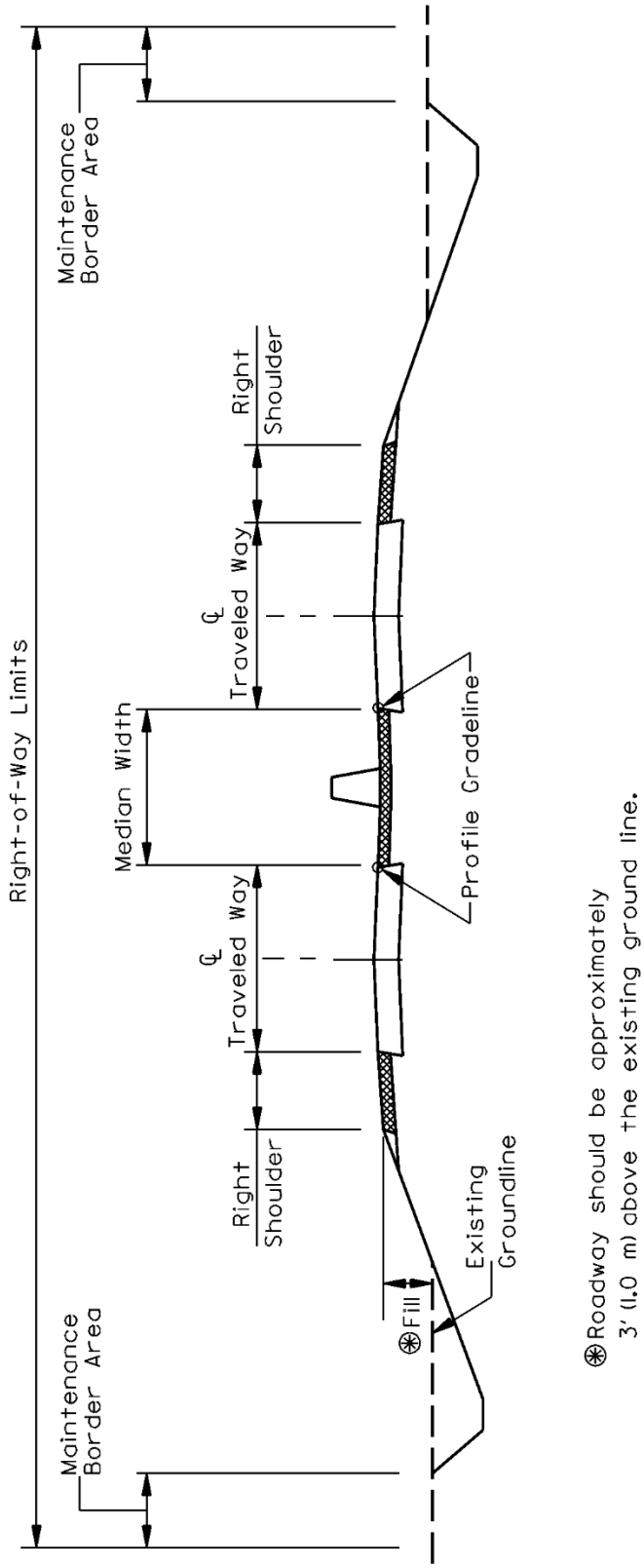

TYPICAL SECTION FOR FOUR-LANE FREEWAY
(Flush Concrete Barrier Median)

Figure 44-2.C

HARD COPIES UNCONTROLLED

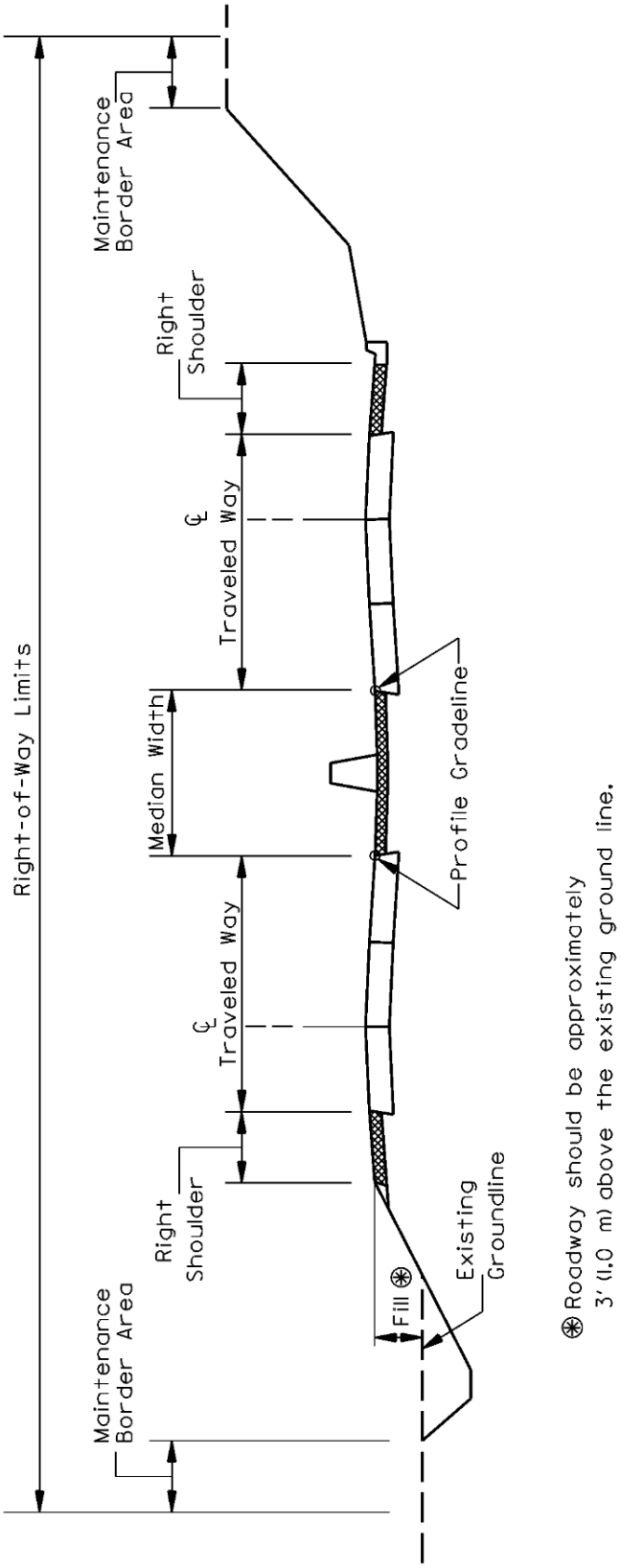

TYPICAL SECTION FOR SIX-LANE FREEWAY
(Flush Concrete Barrier Median)

Figure 44-2.D

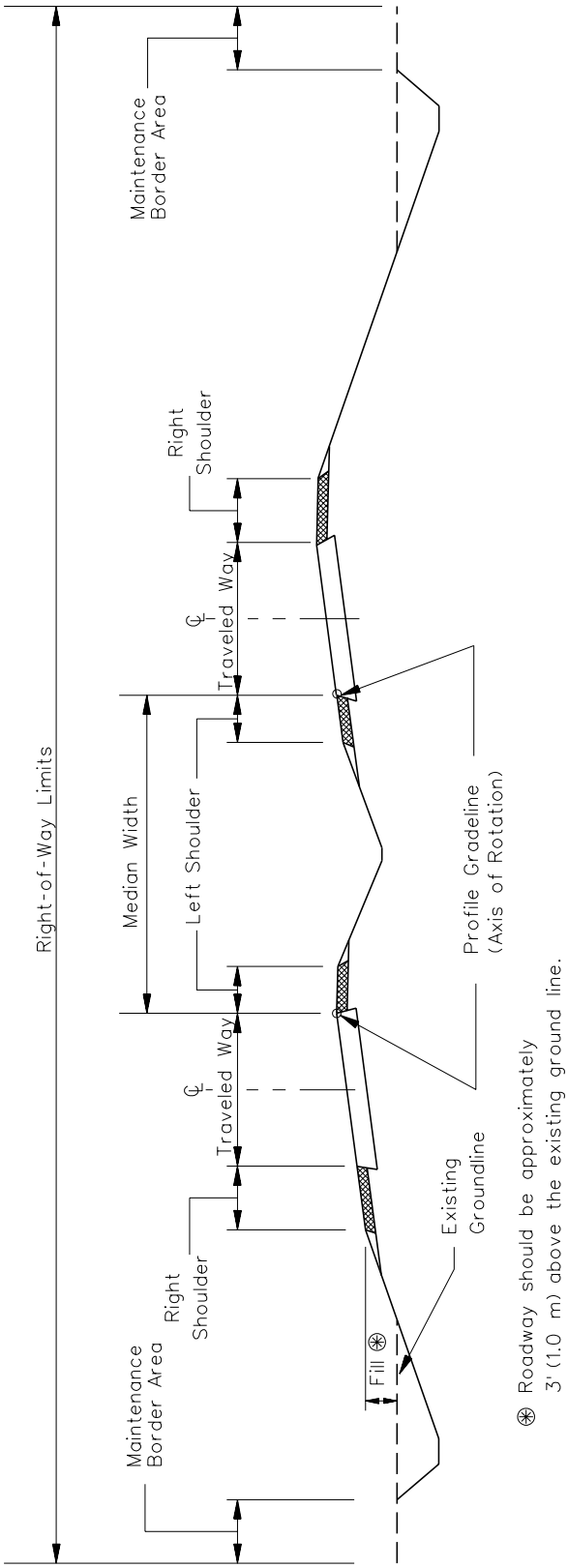

TYPICAL SECTION FOR SUPERELEVATED FREEWAY (Depressed Median)

Figure 44-2.E

HARD COPIES UNCONTROLLED

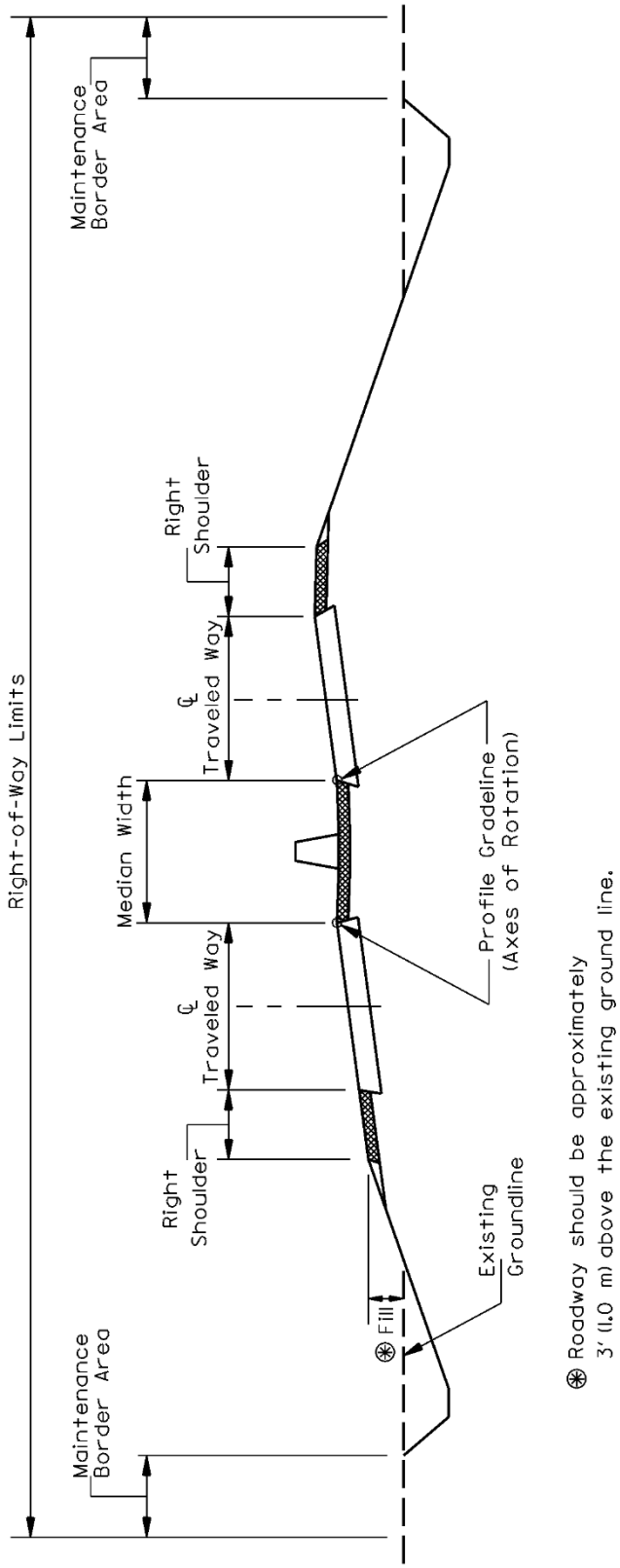

TYPICAL SECTION FOR SUPERELEVATED FREEWAY (Flush Concrete Barrier Median)

Figure 44-2.F

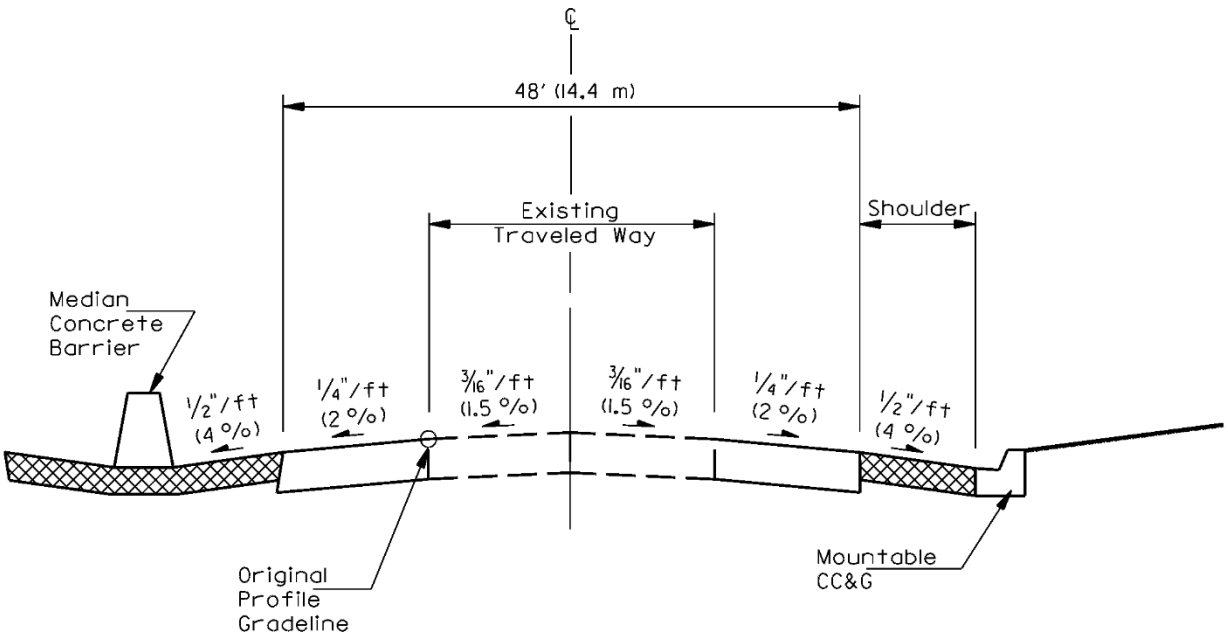

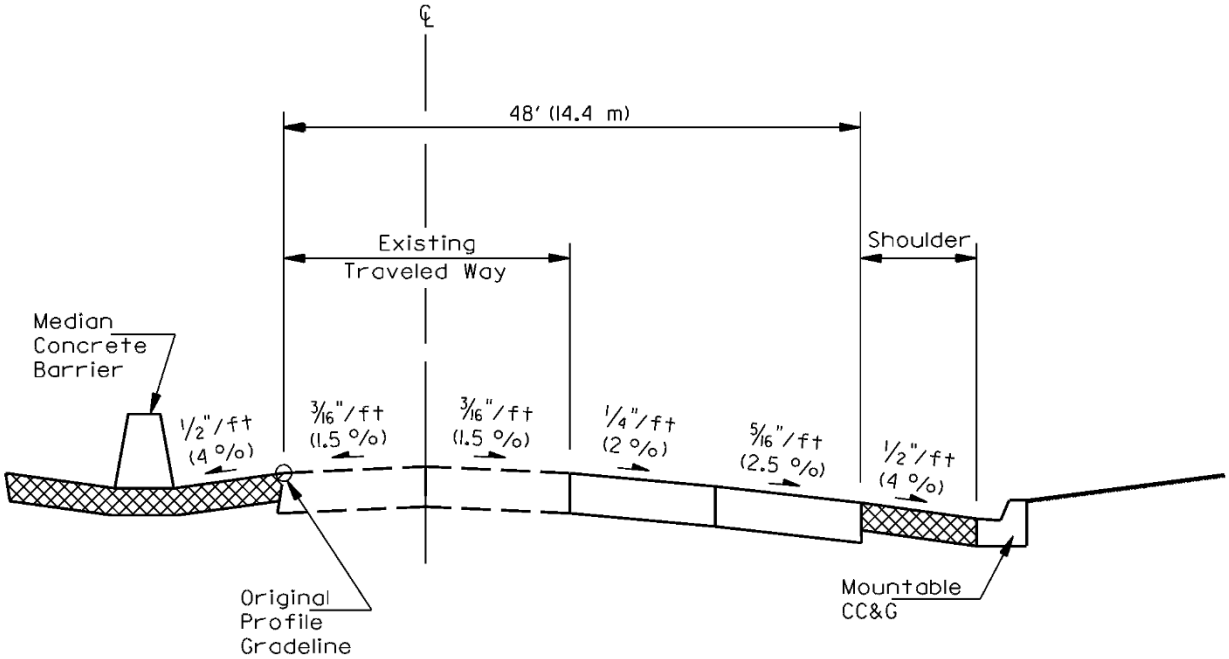

CONVERTING TWO-LANES TO FOUR-LANES IN EACH DIRECTION

Figure 44-2.G

HARD COPIES UNCONTROLLED

44-2.05 Frontage Roads/Service Drives

44-2.05(a) General

A frontage road is a public street or road, adjacent to, and normally located parallel to a freeway or expressway and connected to a public street or road at both ends. Its purpose is to maintain local road continuity and to provide for controlling of access. Frontage roads serve numerous functions, depending on the type of facility served and the character of the surrounding area. They may be used to control access to the facility, to function as a street serving adjoining property, and to maintain circulation of traffic on each side of the freeway. Frontage roads segregate local traffic from the higher speed through traffic and serve driveways of residences and commercial establishments along the freeway. Connections between the freeway and frontage roads are provided at interchanges. Thus, the flow of the freeway traffic is unaffected by subsequent development. To determine the location of frontage roads at crossroads, see Figures 44-3.B and 44-3.D, Chapter 36, and the access control figures in Chapter 35.

Service drives, as opposed to frontage roads, connect with a public street or road at one end only and normally are constructed to provide access to properties that would otherwise be landlocked or denied access. Service drives adjacent to freeways are usually constructed when an investigation reveals that the cost of construction and right-of-way is less than the cost of mitigation of damages to the properties. Because maintenance of a service drive may become the responsibility of the State, maintenance costs will also need to be considered in the economic analysis.

44-2.05(b) Design Criteria

The selection of the appropriate design criteria is based on the type and ADT of the frontage road, see Figures 44-2.H and 44-2.I. Once the frontage road type has been determined, the appropriate design speed, lane and shoulder widths, etc., can be selected. When designing the frontage road alignment, consider the following:

- In rural areas, design the horizontal curvature according to Chapter 32.
- In urban areas, design the horizontal curvature according to Chapter 48.
- Where horizontal curves approach and tie into a crossroad, see the guidelines in Section 36-1.05(b) for reducing the superelevation rate near the intersection.

For service drives, the design functional classification should be a local road or street. For service drives where the current ADT is 10 or less and the drive serves a single property, a minimum surface width of 12 ft (3.6 m) may be used. Where the ADT is greater than 10 or the drive serves more than one property or is relatively long, consider providing a surface width of 16 ft (5.0 m) or wider to permit passing of opposing vehicles. A roadway surface of a higher type than typically used may be provided when replacing an existing facility in kind.

Design Element				Manual Section	Frontage Road Type A	Frontage Road Type B	Frontage Road Type C
Design Controls	Design Forecast Year			31-4.02	Current	Current	Current
	Design Service Volume			31-4.03	>2000 ADT	400-2000 ADT	<400 ADT
	*Design Speed **(1)(2)**			31-2	55 mph (50 mph)	50 mph (40 mph)	40 mph (30 mph)
	Access Control			35-2	None	None	None
	Level of Service			31-4.04	C	B	B
Cross Section Elements	*Traveled Way Width **(2)**			34-2.01	24′ (22′)	22′	20′
	*Shoulder Width	Total Width **(2)**		34-2.02	8′ (6′)	6′ (4′)	4′ (2′)
		Paved			1′	1′	—
	Auxiliary Lanes	Lane Width		34-2.03	12′	11′	N/A
		Shoulder Width			4′	4′	N/A
	Cross Slope	*Travel Lane		34-2.01	3/16″/ft	3/16″/ft	3/16″/ft
		Shoulder		34-2.02	1/2″/ft – 3/4″/ft	1/2″/ft – 3/4″/ft	1/2″/ft – 3/4″/ft
	Clear Zone			38-3	**(3)**	**(3)**	**(3)**
Roadway Slopes	Side Slopes	Cut Section	Front Slope **(2)**	34-4.03	1V:6H (1V:4H)	1V:6H (1V:4H)	1V:6H (1V:4H)
			Ditch Bottom Width **(2)(4)**		4.0′ (2.0′)	4.0′ (2.0′)	4.0′ (2.0′)
			Back Slope **(5)**		1V:3H	1V:3H	1V:3H
		Rock Cut		34-4.05	—	—	—
		Fill Section **(6)**		34-4.02	1V:4H to Clear Zone 1V:2H Max. to Toe of Slope	1V:4H to Clear Zone 1V:2H Max. to Toe of Slope	1V:3H to Clear Zone 1V:2H Max. to Toe of Slope
Bridges	New and Reconstructed Bridges	*Structural Capacity		N/A	HS-20	HS-20	HS-20
		*Clear Roadway Width **(7)**		39-6	40′	34′	28′
	Existing Bridges to Remain in Place	*Structural Capacity		N/A	H-15	H-15	H-15
		*Clear Roadway Width **(8)**		39-6	30′	28′	26′
	*Vertical Clearance (Frontage Road Under) **(9a)**	New and Replaced Overpassing Bridges		39-4	16′-0″ **(9b)**	14′-9″ **(9b)**	
		Existing Overpassing Bridges		49-6.09	14′-0″		
		Overhead Signs/ Pedestrian Bridges		33-5	17′-3″ **(9b)**		
	*Vertical Clearance (Frontage Road over Railroad)			39-4.06	New 23′-0″	Existing: 21′-6″	

*Controlling design criteria (see Section 31-8).

GEOEMTRIC DESIGN CRITERIA FOR RURAL FRONTAGE ROADS
(New Construction/Reconstruction)
(US Customary)

Figure 44-2.H

HARD COPIES UNCONTROLLED

Design Element				Manual Section	Frontage Road Type A	Frontage Road Type B	Frontage Road Type C
Design Controls	Design Forecast Year			31-4.02	Current	Current	Current
	Design Service Volume			31-4.03	>2000 ADT	400-2000 ADT	<400 ADT
	*Design Speed **(1)(2)**			31-2	90 km/h (80 km/h)	80 km/h (60 km/h)	60 km/h (50 km/h)
	Access Control			35-2	None	None	None
	Level of Service			31-4.04	C	B	B
Cross Section Elements	*Traveled Way Width **(2)**			34-2.01	7.2 m (6.6 m)	6.6 m	6.0 m
	*Shoulder Width	Total Width **(2)**		34-2.02	2.4 m (1.8 m)	1.8 m (1.2 m)	1.2 m (600 mm)
		Paved			300 mm	300 mm	—
	Auxiliary Lanes	Lane Width		34-2.03	3.6 m	3.3 m	N/A
		Shoulder Width			1.2 m	1.2 m	N/A
	Cross Slope	*Travel Lane		34-2.01	1.5%	1.5%	1.5%
		Shoulder		34-2.02	4%-6%	4%-6%	4%-6%
	Clear Zone			38-3	**(3)**	**(3)**	**(3)**
Roadway Slopes	Side Slopes	Cut Section	Front Slope **(2)**	34-4.03	1V:6H (1V:4H)	1V:6H (1V:4H)	1V:6H (1V:4H)
			Ditch Bottom Width **(2)(4)**		1.2 m (600 mm)	1.2 m (600 mm)	1.2 m (600 mm)
			Back Slope **(5)**		1V:3H	1V:3H	1V:3H
		Rock Cut		34-4.05	—	—	—
		Fill Section **(6)**		34-4.02	1V:4H to Clear Zone 1V:2H Max. to Toe of Slope	1V:4H to Clear Zone 1V:2H Max. to Toe of Slope	1V:3H to Clear Zone 1V:2H Max. to Toe of Slope
Bridges	New and Reconstructed Bridges	*Structural Capacity		N/A	MS-18	MS-18	MS-18
		*Clear Roadway Width **(7)**		39-6	12.0 m	10.2 m	8.4 m
	Existing Bridges to Remain in Place	*Structural Capacity		N/A	MS-13.5	MS-13.5	MS-13.5
		*Clear Roadway Width **(8)**		39-6	9.0 m	8.4 m	7.8 m
	*Vertical Clearance (Frontage Road Under) **(9a)**	New and Replaced Overpassing Bridges		39-4	4.9 m **(9b)**	4.5 m **(9b)**	
		Existing Overpassing Bridges		49-6.09	4.3 m		
		Overhead Signs/ Pedestrian Bridges		33-5	5.25 m **(9b)**		
	*Vertical Clearance (Frontage Road over Railroad)			39-4.06	New: 7.0 m	Existing: 6.6 m	

*Controlling design criteria (see Section 31-8)

GEOEMTRIC DESIGN CRITERIA FOR RURAL FRONTAGE ROADS
(New Construction/Reconstruction)
(Metric)

Figure 44-2.H

Design Element			Manual Section	Frontage Road Type A	Frontage Road Type B	Frontage Road Type C
Design Controls	Design Forecast Year		31-4.02	Current	Current	Current
	Design Service Volume		31-4.03	>2000 ADT	400-2000 ADT	<400 ADT
	*Design Speed **(1)**		31-2	≥ 30 mph	≥ 30 mph	Min.: 30 mph
	Access Control		35-2	None	None	None
	Level of Service		31-4.04	C	B	B
Cross Section Elements	*Surface Width		34-2.01	30′	30′	28′
	Outside Curb Type & Width		34-2.04	B6.24 CC&G	B6.24 CC&G	Type B Gutter
	Auxiliary Lanes	Lane Width	34-2.03	12′	11′	N/A
		Outside Curb Type & Width		B6.12 CC&G	B6.12 CC&G	N/A
	Cross Slope	*Travel Lane	34-2.01	1/4″/ft	1/4″/ft	1/4″/ft
	Sidewalk Width		48-2.04	5′ with Buffer Strip Behind Curb	5′ with Buffer Strip Behind Curb	5′ with Buffer Strip Behind Curb
	Clear Zone		38-3	**(3)**	**(3)**	**(3)**
Roadway Slopes	Side Slopes	Cut Section (Curbed)	34-4.04	—	—	
		Rock Cut	34-4.05	—	—	—
		Fill Section (Curbed)	34-4.02	—	—	—
Bridges	New and Reconstructed Bridges	*Structural Capacity	N/A	HS-20	HS-20	HS-20
		*Clear Roadway Width **(7)**	39-6	30′	30′	30′
	Existing Bridges to Remain in Place	*Structural Capacity	N/A	H-15	H-15	H-15
		*Clear Roadway Width **(8)**	39-6	30′	28′	26′
	*Vertical Clearance (Frontage Road Under) **(9a)**	New and Replaced Overpassing Bridges	39.4	16′-0″ **(9b)**	14′-9″ **(9b)**	
		Existing Overpassing Bridges		14′-0″		
		Overhead Signs/ Pedestrian Bridges	33-5	17′-3″ **(9b)**		
	*Vertical Clearance (Frontage Road over Railroad)		39-4.06	New: 23′-0″ Existing: 21′-6″		

*Controlling design criteria (see Section 31-8). f-f = face of curb to face of curb e-e = edge of traveled way to edge of traveled way

GEOEMTRIC DESIGN CRITERIA FOR URBAN FRONTAGE ROADS
(New Construction/Reconstruction)
(US Customary)

Figure 44-2.I

HARD COPIES UNCONTROLLED

Design Element			Manual Section	Frontage Road Type A	Frontage Road Type B	Frontage Road Type C
Design Controls	Design Forecast Year		31-4.02	Current	Current	Current
	Design Service Volume		31-4.03	>2000 ADT	400-2000 ADT	<400 ADT
	*Design Speed **(1)**		31-2	≥ 50 km/h	≥ 50 km/h	Min.: 50 km/h
	Access Control		35-2	None	None	None
	Level of Service		31-4.04	C	B	B
Cross Section Elements	*Surface Width		34-2.01	9.2 m f-f	9.2 m f-f	8.4 m e-e
	Outside Curb Type & Width		34-2.04	B15.60 CC&G	B15.60 CC&G	Type B Gutter
	Auxiliary Lanes	Lane Width	34-2.03	3.6 m	3.3 m	N/A
		Outside Curb Type & Width		B15.30 CC&G	B15.30 CC&G	N/A
	Cross Slope	*Travel Lane	34-2.01	2%	2%	2%
	Sidewalk Width		48-2.04	1.5 m with Buffer Strip Behind Curb	1.5 m with Buffer Strip Behind Curb	1.5 m with Buffer Strip Behind Curb
	Clear Zone		38-3	**(3)**	**(3)**	**(3)**
Roadway Slopes	Side Slopes	Cut Section (Curbed)	34-4.04	—	—	
		Rock Cut	34-4.05	—	—	—
		Fill Section (Curbed)	34-4.02	—	—	—
Bridges	New and Reconstructed Bridges	*Structural Capacity	N/A	MS-18	MS-18	MS-18
		*Clear Roadway Width **(7)**	39-6	9.2 m	9.2 m	9.2 m
	Existing Bridges to Remain in Place	*Structural Capacity	N/A	MS-13.5	MS-13.5	MS-13.5
		*Clear Roadway Width **(8)**	39-6	9.0 m	8.4 m	7.8 m
	*Vertical Clearance (Frontage Road Under) **(9a)**	New and Replaced Overpassing Bridges	39.4	4.9 m **(9b)**	4.5 m **(9b)**	
		Existing Overpassing Bridges		4.3 m		
		Overhead Signs/ Pedestrian Bridges	33-5	5.25 m **(9b)**		
	*Vertical Clearance (Frontage Road over Railroad)		39-4.06	New: 7.0 m	Existing: 6.6 m	

*Controlling design criteria (see Section 31-8). f-f = face of curb to face of curb e-e = edge of traveled way to edge of traveled way

GEOEMTRIC DESIGN CRITERIA FOR URBAN FRONTAGE ROADS
(New Construction/Reconstruction)
(Metric)

Figure 44-2.I

(1) Design Speed. To determine the minimum design speed to remain in place, see Section 45-2.02.

(2) Remain In Place. Minimum design criteria allowed to remain in place for existing design elements are shown in parenthesis.

(3) Clear Zone. The clear zone will vary according to design speed, traffic volumes, side slopes, and horizontal curvature.

(4) Ditch Bottom Width. Provide a wider outside ditch bottom where detention storage of storm water is a consideration.

(5) Back Slope. Where the height of cut exceeds 10 ft (3 m), consider using a 1V:2H back slope beyond the clear zone. Also, for heights greater than 30 ft (9 m), consider the use of benching.

(6) Fill Slope. For fill heights greater than 30 ft (9 m), use a 1V:2H uniform slope with a roadside barrier. Also, for heights greater than 30 ft (9 m), consider the use of benching.

(7) New and Reconstructed Bridge Widths. Clear roadway bridge widths are measured from face to face of parapets or rails. Bridge widths are normally defined as the sum of the approach traveled way width and the width of the paved shoulders.

(8) Existing Bridge Widths to Remain in Place. Clear roadway bridge widths are measured from face to face of parapets or rails. Implies elements allowed to remain in place without a design exception approval when cost effective and when safety record is satisfactory.

(9) Vertical Clearance (Frontage Road Under).

a. The clearance must be available over the traveled way and any paved shoulders.
b. Table value includes allowance for future overlays.

GEOEMTRIC DESIGN CRITERIA FOR RURAL/URBAN FRONTAGE ROADS
(New Construction/Reconstruction)

Footnotes to Figures 44-2.H and 2.I

HARD COPIES UNCONTROLLED

44-2.05(c) One-Way/Two-Way

Two-way frontage roads are used in suburban or rural areas where the adjoining street system is so irregular or so disconnected that one-way operation would introduce considerable added travel distance and cause undue inconvenience. Two-way frontage roads are also used in many urban situations.

From an operational and safety perspective, one-way urban frontage roads are preferred to two-way. One-way operations may inconvenience local traffic to some extent, but the advantages in reducing vehicular and pedestrian conflicts at intersecting streets often fully compensates for this inconvenience. Two-way frontage roads at high-volume, urban intersections may complicate crossing and turning movements. Off ramps (e.g., slip ramps) joining two-way frontage roads should not be used because of the potential for wrong-way entry. See Section 37-5.02 for the design of one-way frontage roads with slip ramps.

44-2.05(d) Outer Separation

The area between the traveled way of the freeway and a frontage road or street is designated as the outer separation distance. This separation functions as a buffer between the through traffic on the freeway and the local traffic on the frontage road. This separation also provides space for shoulders, drainage, and ramp connections to or from the through facility where slip ramps are used. The wider the outer separation, the less influence local traffic will have on the freeway through traffic. Wider separations also lend themselves to landscape treatments that enhance the appearance of both highways and the adjoining property. In urbanized areas, wide separations may also be used for noise walls or noise berms.

The width of an outer separation is based upon the sum of the shoulder widths for the freeway and frontage road, an appropriate border area, and earth slopes. On curvilinear alignments, also consider the clear zone along the outside of horizontal curves when determining the width of the border area. Figure 44-2.J illustrates a typical separation between a rural freeway and frontage road where both roadways have the same profile elevation. The width of this outer separation would have to be increased accordingly for differences in roadway profile elevations. Figure 44-2.K illustrates two typical separations between an urban freeway and a frontage road.

At interchanges, connect the frontage road with the crossroad outside of the access control limits as shown in Chapter 35. For grade separated crossings, the frontage road is typically flared out to account for geometric restrictions (e.g., sight distance restrictions, embankments). This design is illustrated in Figures 44-3.B, 44-3.D, and 36-1.F. Figure 36-1.G also illustrates where the frontage road passes under the crossroad and is connected to the crossroad with a buttonhook design.

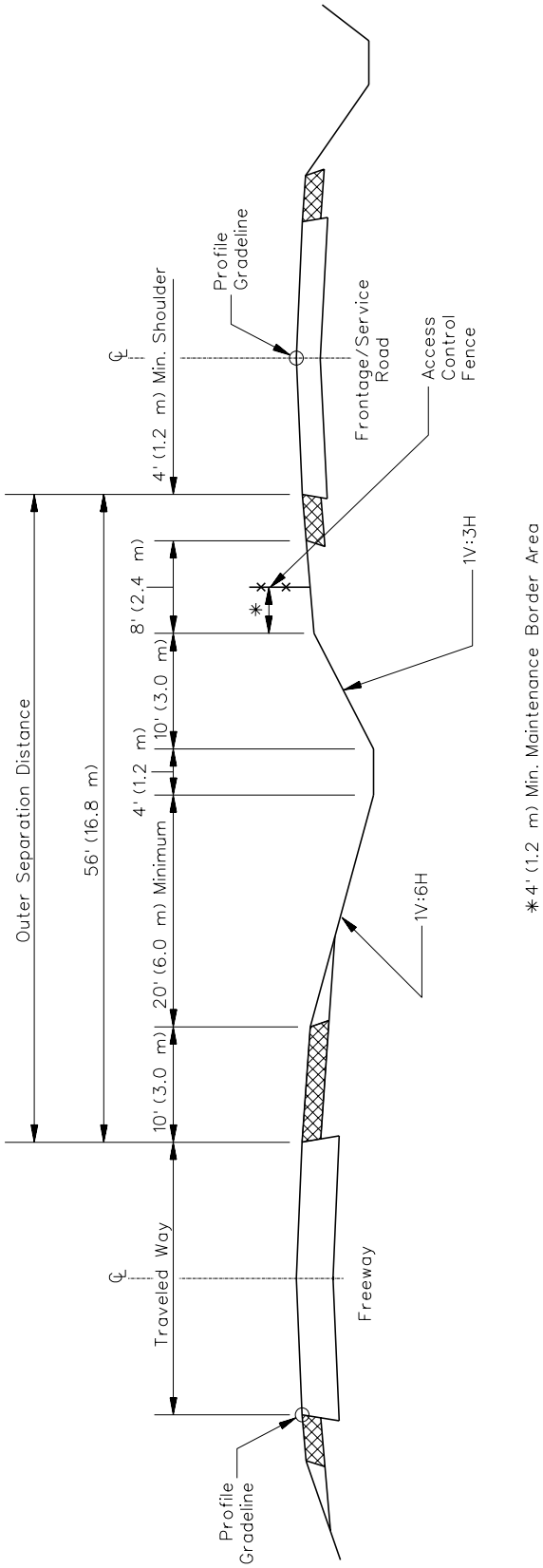

Note: Both roadways are assumed to be at the same profile elevation.

TYPICAL CROSS SECTION FOR RURAL OR SUBURBAN OUTER SEPARATION

Figure 44-2.J

HARD COPIES UNCONTROLLED

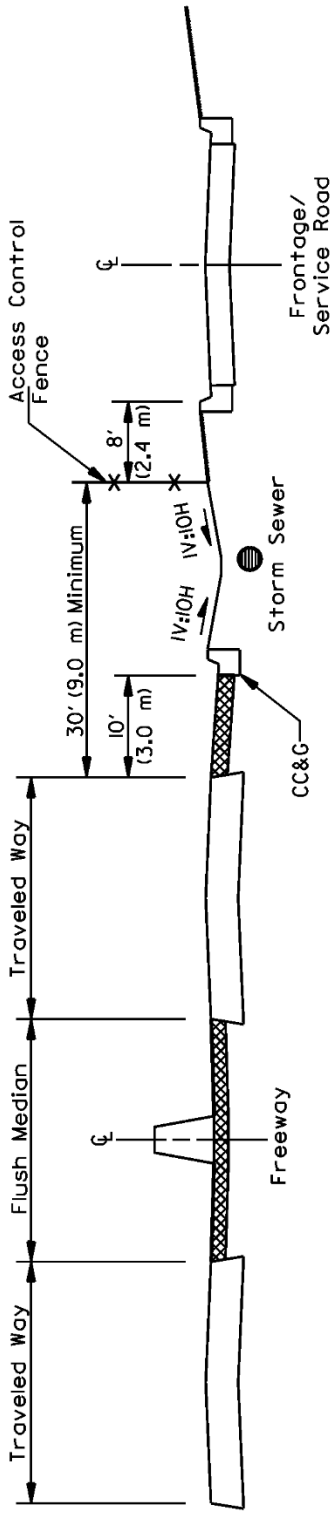

30 ft (9.0 m) OUTER SEPARATION

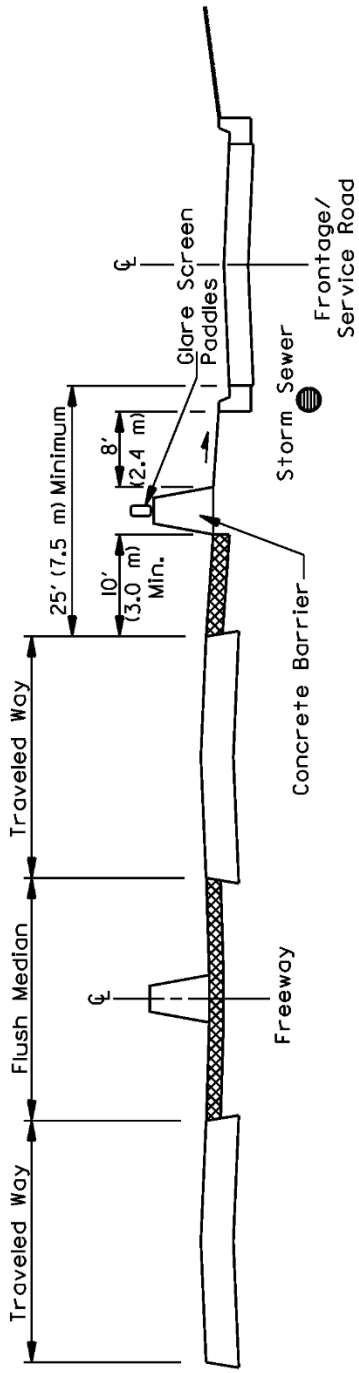

25 ft (7.5 m) OUTER SEPARATION

TYPICAL CROSS SECTION FOR URBAN OUTER SEPARATION (Restricted ROW Conditions)

Figure 44-2.K

44-2.06 Lane Drops

Freeway lane drops, where the basic number of lanes is reduced, should normally occur on the freeway mainline away from any other turbulence (e.g., interchange exits and entrances). Figure 44-2.L illustrates the recommended design of a lane drop beyond an interchange where there is a high probability of no additional through lanes being needed on the freeway in the near future. Where the addition of a through lane is highly likely in the near future (i.e., four to six years), consider providing a median or left-side lane drop; see Item 4 below. Because left-side lane drops do not meet normal driver expectations, provide advance supplemental signing, longer taper lengths, and 12 ft (3.6 m) wide paved left shoulders beyond the area of the proposed lane drop. In addition, consider the following criteria when designing a freeway lane drop:

1. Location. The following discusses the appropriate locations for lane drops:

   a. Rural. Desirably, the lane drop should occur approximately 2000 ft–3000 ft (600 m-900 m) beyond the end of a standard entrance terminal. This distance allows for adequate signing and driver adjustments from the interchange, but yet is not so far downstream that drivers become accustomed to the number of lanes and are surprised by the lane drop. A lane drop should not occur on a horizontal curve or where other signing is required (e.g., an upcoming exit).

   b. Urban. Where interchanges are closely spaced, it may be necessary to drop a freeway lane at an exit. This decision is made on a case-by-case basis and an evaluation of operations of the traffic volume exiting versus the through traffic volume. It is preferable to drop the freeway lane at a major divergence or two-lane exit rather than at a single-lane exit. Lane drops at exit ramps are further discussed in Section 37-6.

2. Tapers. The minimum taper length at the end of a lane drop is 840 ft (250 m).

3. Sight Distance. Decision sight distance (DSD) should be available to any point within the entire lane transition. See Section 31-3.02 for applicable DSD values. This criterion would favor, for example, placing a freeway lane drop within a sag vertical curve rather than just beyond a crest or at a location where the freeway lies on an upgrade.

4. Right-Side versus Left-Side Drop. Right-side freeway lane drops are preferred due to the merging of slower vehicles and normal driver expectations. In the situation where the left lane is to be continued in the median in the future, the right-side lane drop is still preferred. In this case, the mainline is designed for a right-side lane drop and the traveled way is shifted through a set of flat reverse curves. Figure 44-2.M illustrates this design.

5. Shoulders. Maintain the full-width right shoulder through a right-side lane drop. If a left-lane drop is used, maintain the full 10 ft or 12 ft (3.0 m or 3.6 m) paved left shoulder for a distance of 350 ft (100 m) beyond the lane drop. This will provide a recovery area for those drivers who missed the lane drop.

6. Lane Addition. Figure 44-2.M illustrates a typical example for adding a lane to a freeway.

HARD COPIES UNCONTROLLED

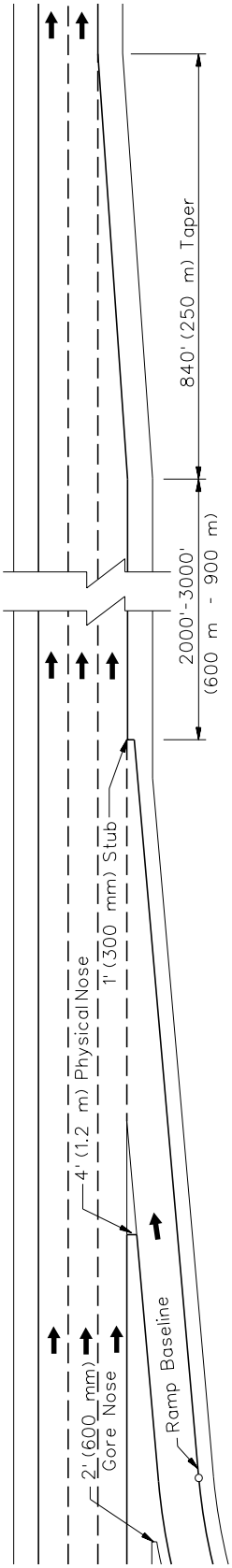

TYPICAL FREEWAY LANE DROP
(Right Side)

Figure 44-2.L

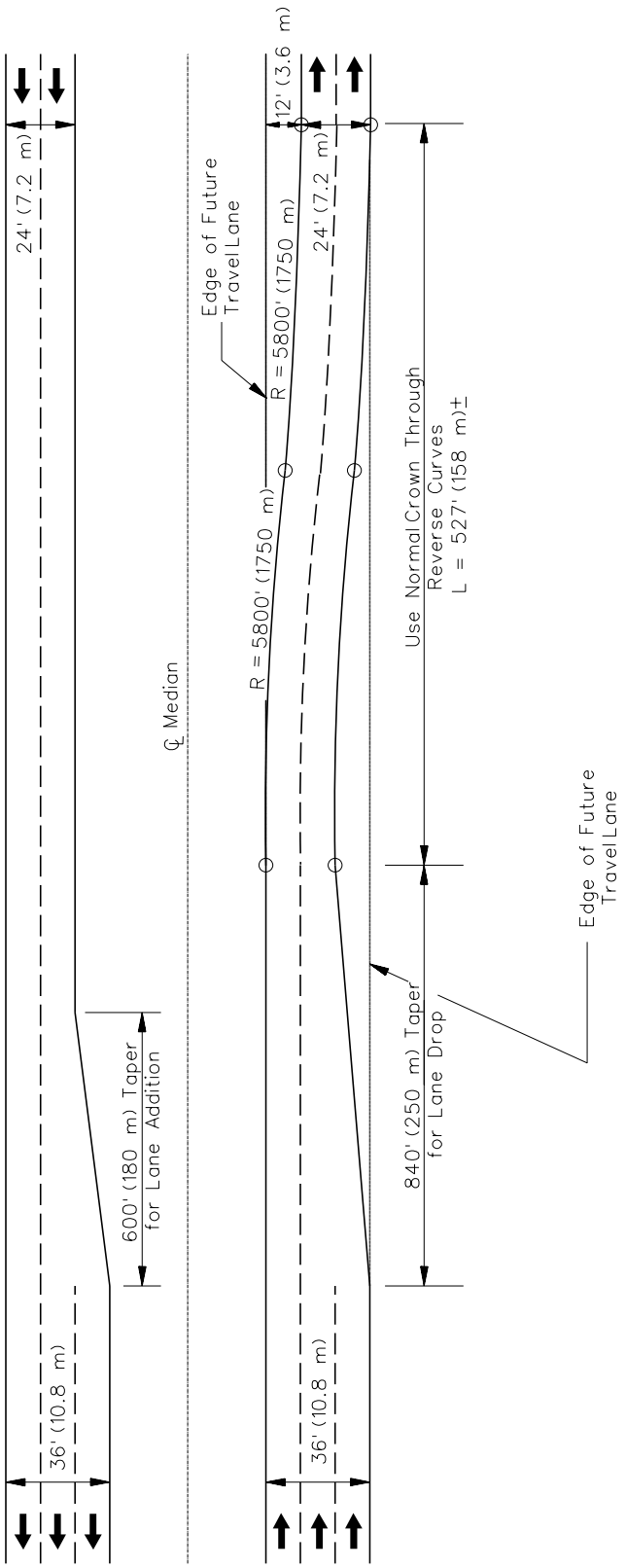

TYPICAL FREEWAY LANE DROP AND ADDITION
(Median Lanes to be Continued in the Future)

Figure 44-2.M

HARD COPIES UNCONTROLLED

44-2.07 Roadside Safety

Chapter 38 discusses the design of clear zones, roadside barriers, breakaway sign supports, median barriers, and impact attenuators that are also applicable to freeways. In addition, the following criteria will apply to freeways:

1. Curbs. Curbing should not be used on freeways. However, where deemed necessary, only use M-4.24 (M-10.60) curb and gutter. Do not locate the curb and gutter any closer than the outer edge of the shoulder.

2. Utilities. Utility easements running parallel to the freeway should be outside the access control line. Generally, provide access to these easement strips from outside of the freeway right-of-way. This includes both the freeway mainline and ramps.

3. Landscaping. Proper landscaping of the freeway can contribute to the safe operation of the freeway by indicating changes in road and ramp alignments, reducing glare from oncoming vehicles, and controlling snow drifting. Plan the landscaping so that when it matures it will not become an obstacle itself or will not restrict sight distance.

44-2.08 Branch Connections/Major Forks

Where two freeways diverge or converge, a major divergence or convergence design will be required. Section 37-6 provides the design criteria for major diverges and converges.

44-2.09 Overhead Signing

Proper interchange operations depend partially on the compatibility between its geometric design and the traffic control devices at the interchange. Freeway signing should be planned concurrently with the geometric design. The proper application of signs and pavement markings increases the clarity of the path to be followed and the safety and operational efficiency of the freeway. For many freeways, overhead signing is used to increase this clarity. Due to sight distance limitations and spacing logistics, signing along a highway segment also impacts the minimum acceptable spacing between adjacent interchanges. Section 37-2.16 provides minimum distances between interchange terminals based on operational and signing requirements. For additional information on the use of overhead signing, the designer should review the *Illinois MUTCD* and/or contact the Bureau of Operations.

HARD COPIES UNCONTROLLED

44-3 OTHER DESIGN FEATURES

44-3.01 Access Control

44-3.01(a) General

A controlled access highway is defined as a highway where the right of owners or occupants of abutting land to access, light, air, or view, in conjunction with a highway design, is controlled by a public authority. For freeways, the access is controlled by the Department and is limited to interchanges. Direct access to property along the freeway is prohibited. Indirect access may be provided to these properties by means of frontage or service roads constructed adjacent and parallel to the freeway or by existing roads that intersect other public roads, which then connect to an interchange. Section 37-1 discusses the Department's criteria for adding or changing access points (interchanges) along the freeway.

44-3.01(b) Access Control Line

The extent of access control on any freeway is indicated by the access control line. This line is placed on the access control plans included with a Phase I engineering report and on the right-of-way and construction plans. It clearly delineates the extent of access control and provides a permanent record. The access control line is defined as a line established by the Department across which ingress to or egress from a freeway is prohibited. This line is generally coincident with or parallel to the right-of-way line of the normal roadway section and is continuous along the freeway. The access control line must assume various configurations at grade separation structures and bridges and, is extended along those highways interchanging with the freeway. Access control along the crossroad provides for smooth flow of traffic and proper signing distances. The following access control criteria will apply to freeways:

1. Interchanges. Chapter 35 presents the Department's access control criteria along interchange crossroads.

2. Grade Separated Structures. The access control lines at grade separation structures (without an interchange) must be located to permit the movement of traffic over or under the freeway and preclude direct access to the freeway. The locations of access control lines at grade separation structures are indicated in Figures 44-3.A through 44-3.F.

3. Bridges and Culverts. The location of the access control line at bridges and at culverts, having a clear height of 6 ft (1.8 m) or greater or a definite stream channel will necessitate fencing being installed around the culvert wing wall. This is illustrated in Figure 44-3.G. Where the culvert has a clear height less than 6 ft (1.8 m) and no definite stream channel, the access control line is continuous as illustrated in Figure 44-3.H.

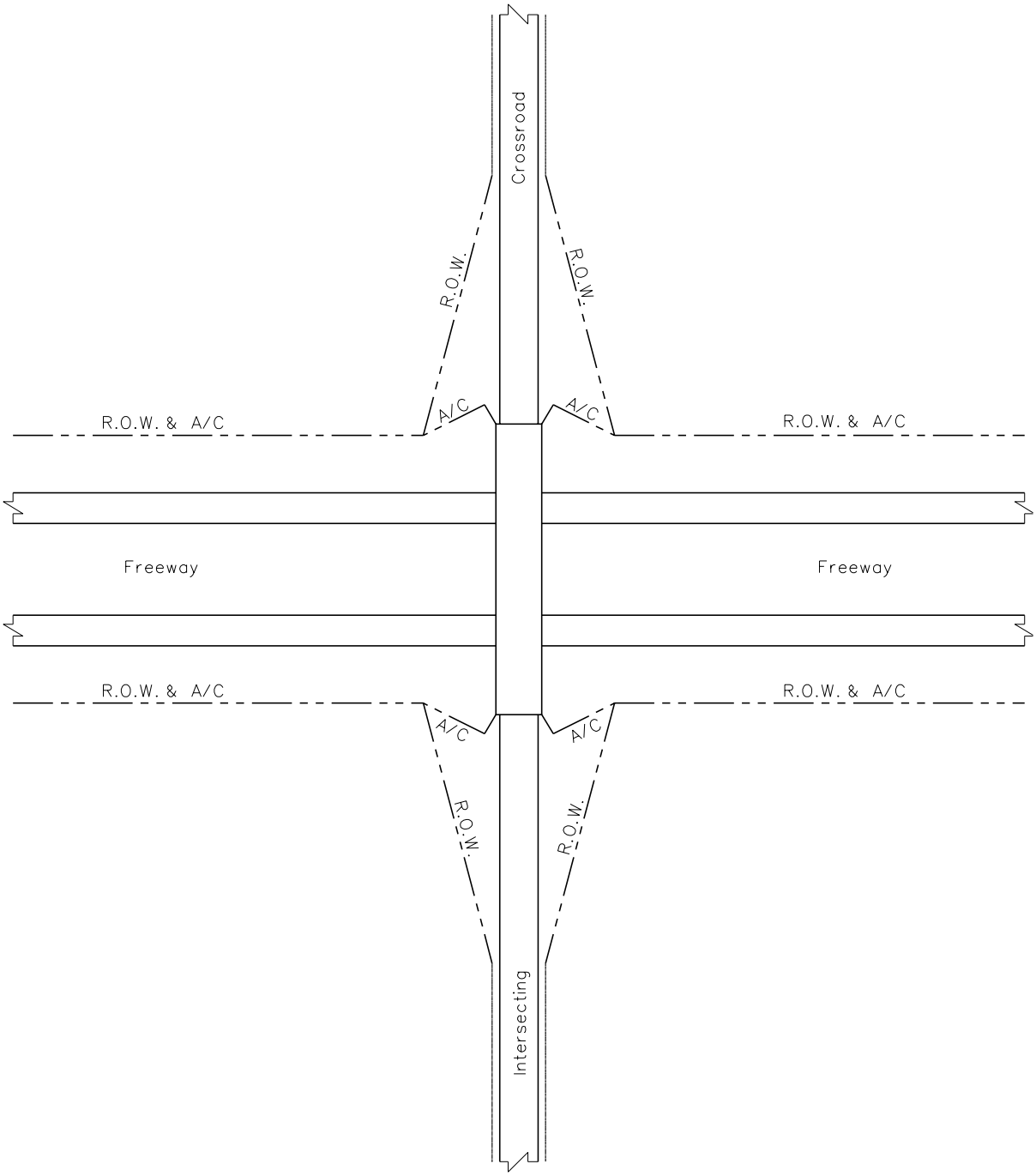

FREEWAY UNDER INTERESECTING CROSSROAD
(Without Frontage Roads)

Figure 44-3.A

HARD COPIES UNCONTROLLED

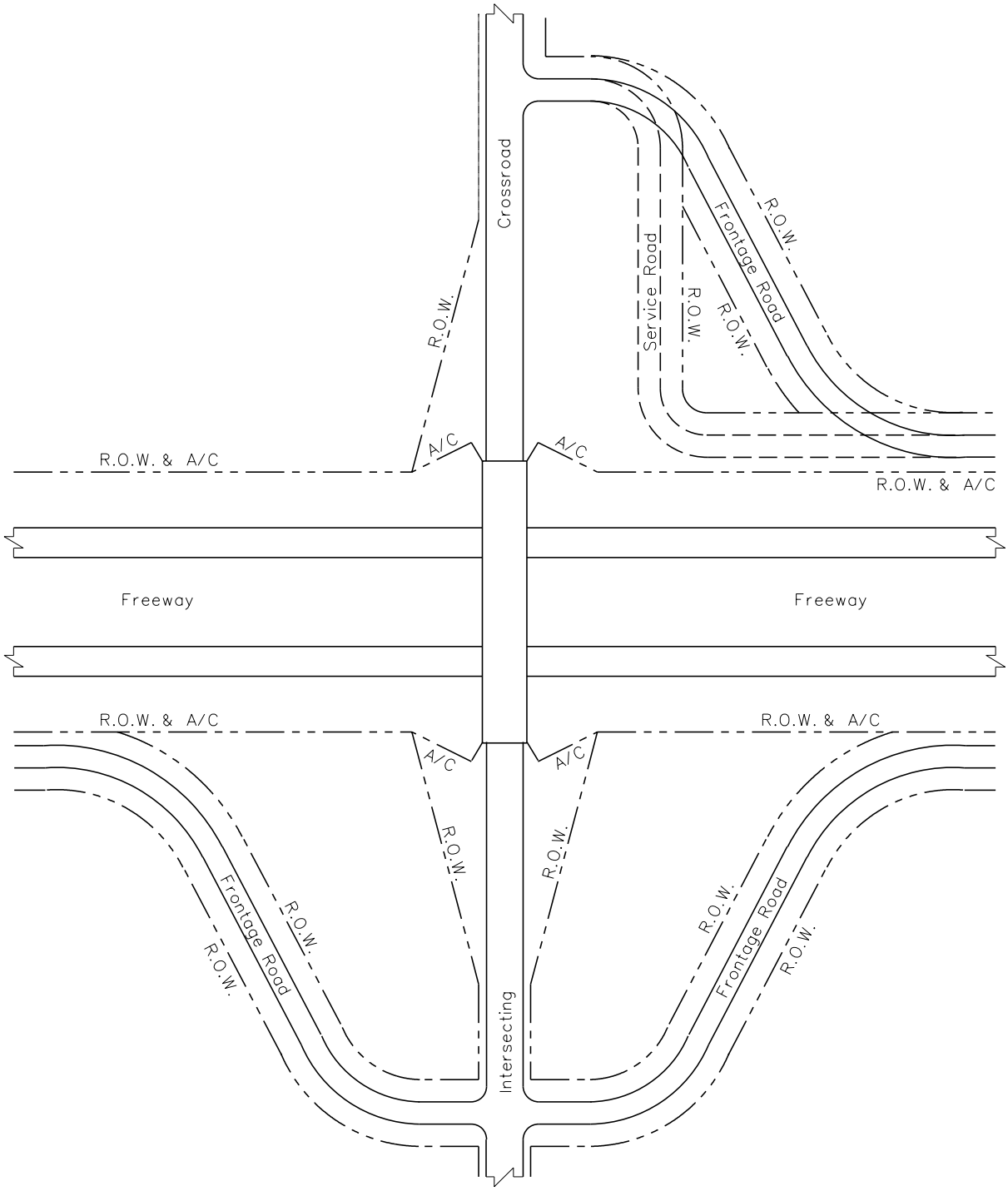

FREEWAY UNDER INTERESECTING CROSSROAD
(With Frontage Roads or Service Drive)

Figure 44-3.B

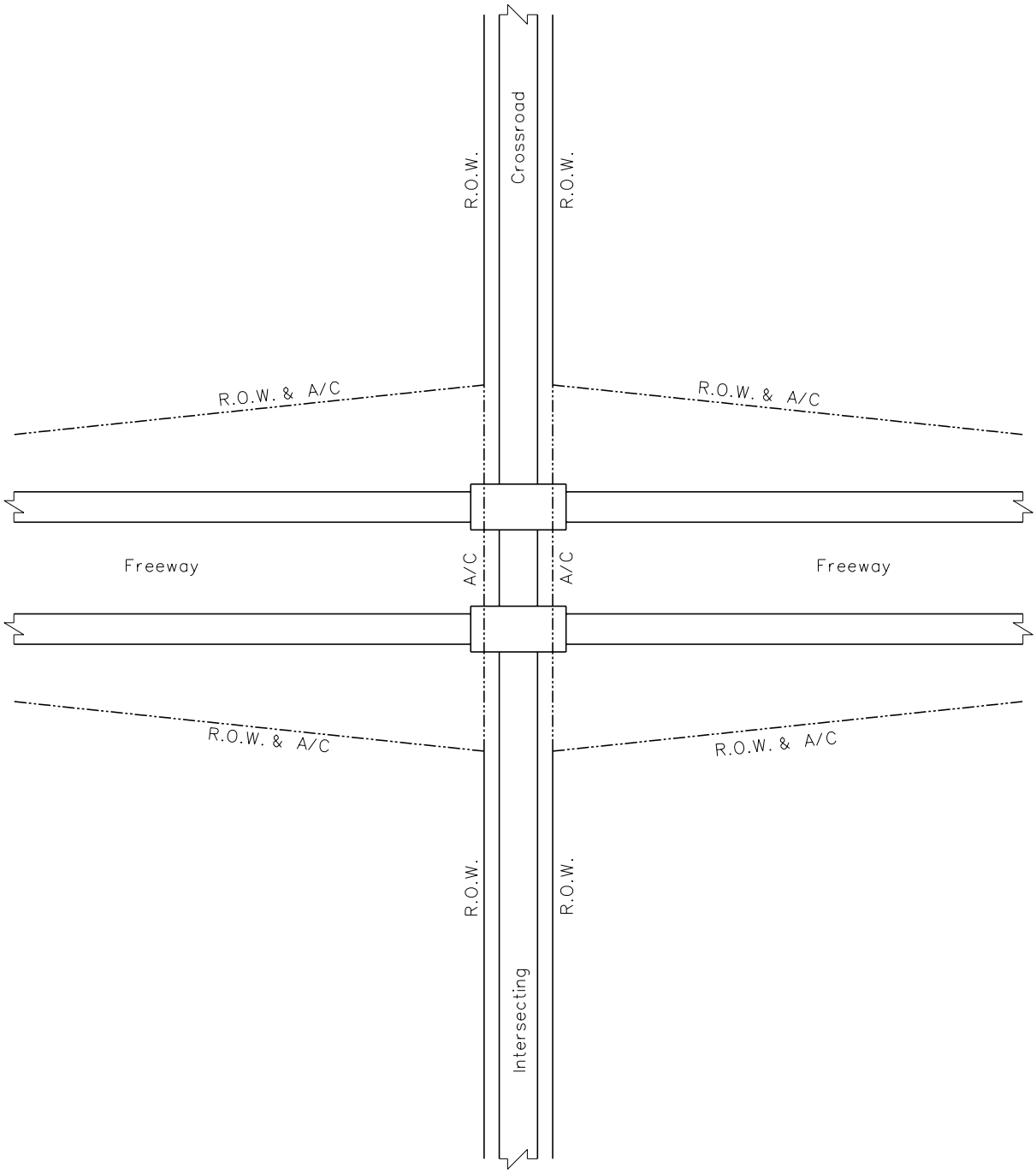

FREEWAY OVER INTERESECTING CROSSROAD
(Without Frontage Roads)

Figure 44-3.C

HARD COPIES UNCONTROLLED

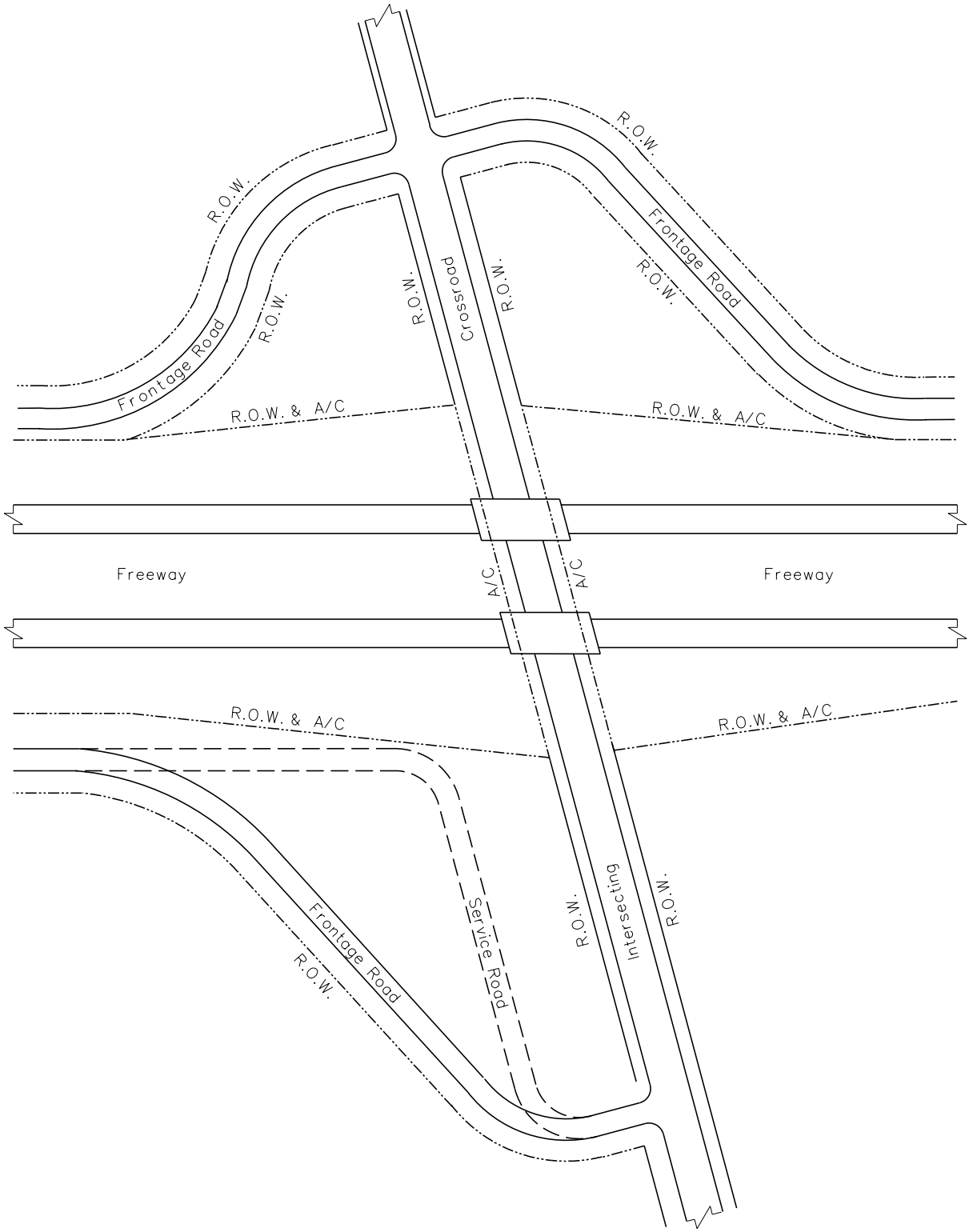

FREEWAY OVER INTERESECTING CROSSROAD
(With Frontage Roads or Service Drive)

Figure 44-3.D

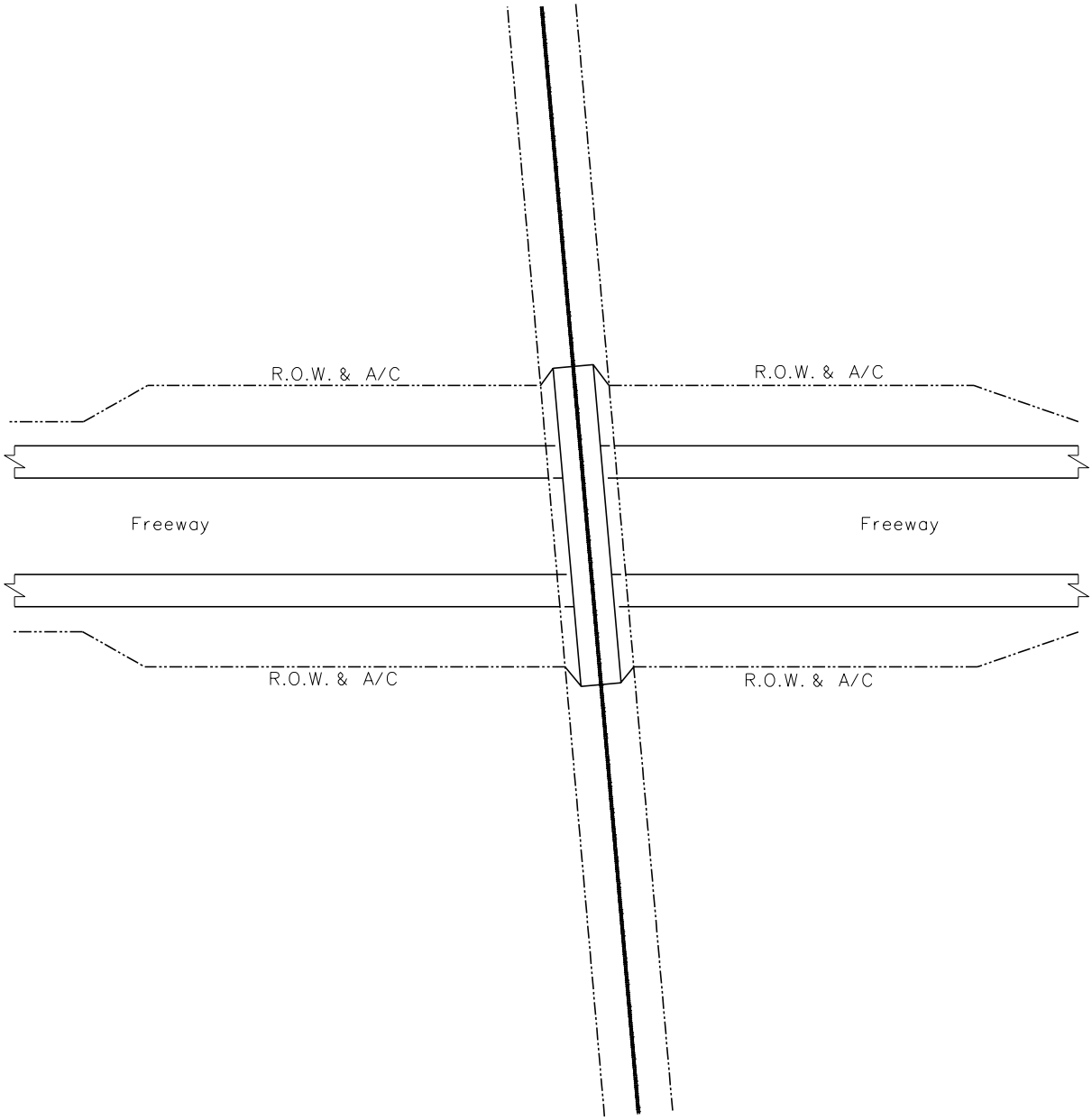

FREEWAY UNDER RAILROAD

Figure 44-3.E

HARD COPIES UNCONTROLLED

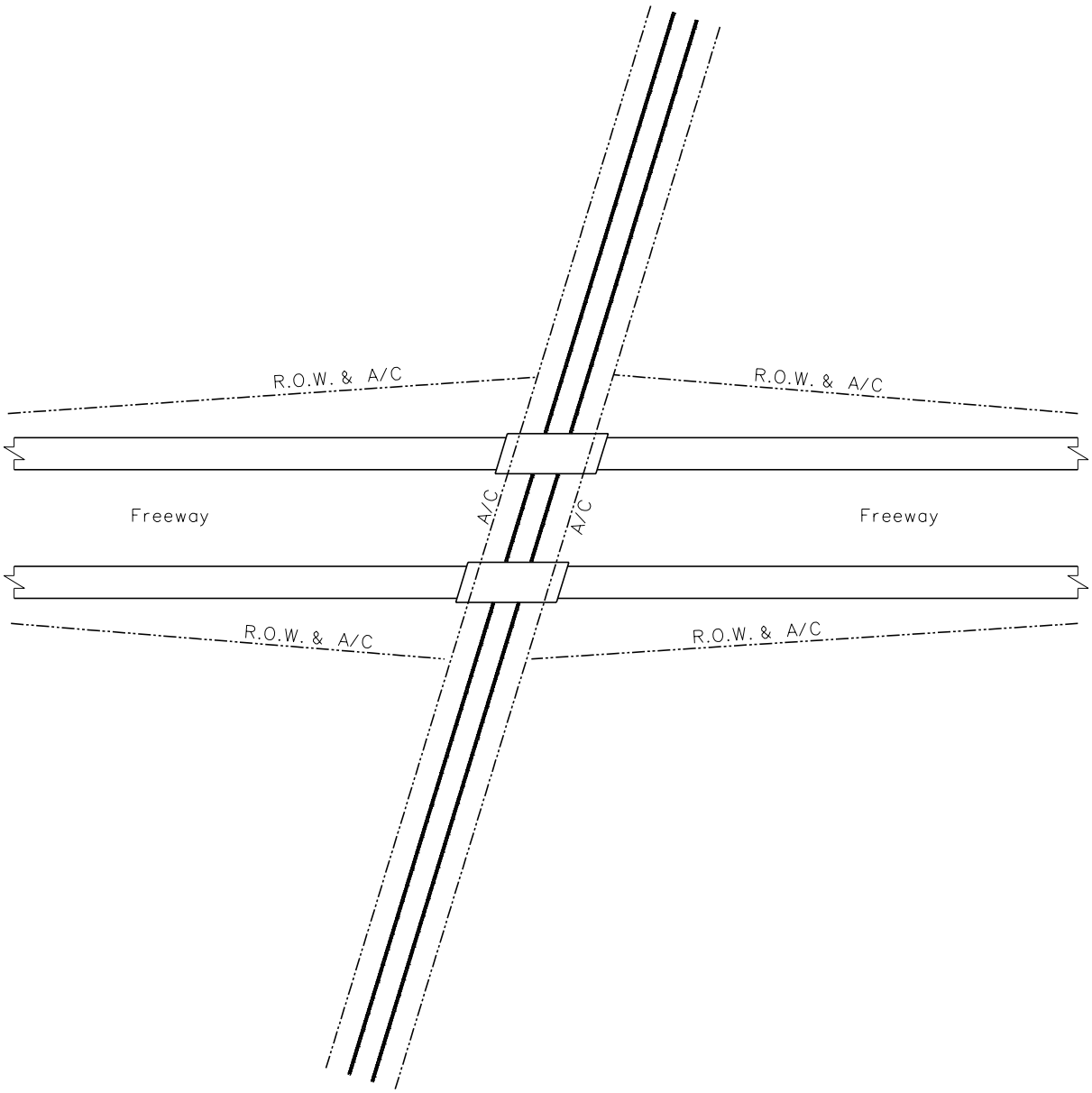

FREEWAY OVER RAILROAD

Figure 44-3.F

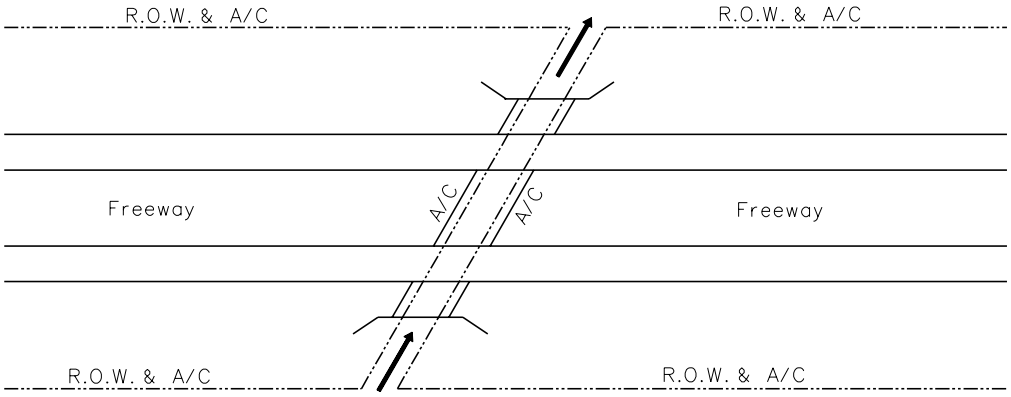

ACCESS CONTROL AT BRIDGES AND CULVERTS
(6 ft (1.8 m) or Larger)

Figure 44-3.G

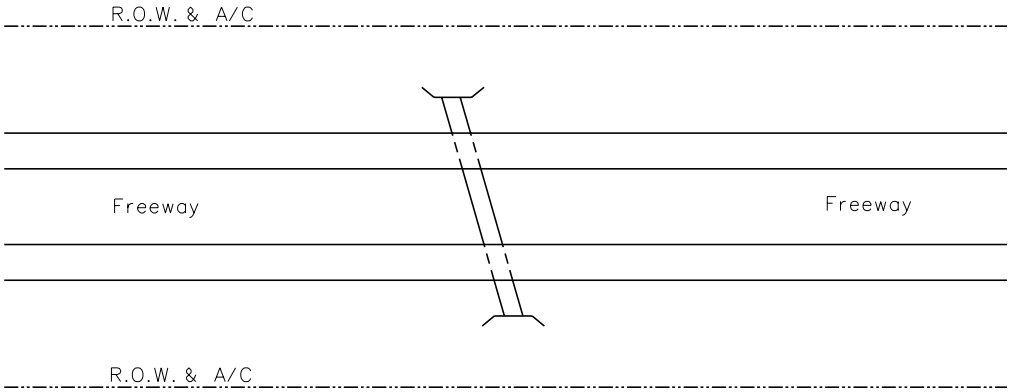

ACCESS CONTROL AT BRIDGES AND CULVERTS
(Less Than 6 ft (1.8 m))

Figure 44-3.H

HARD COPIES UNCONTROLLED

44-3.02 HOV Lanes

44-3.02(a) General

High occupancy vehicle (HOV) lanes are those dedicated, for a portion of the day, to provide priority treatment for HOV's (e.g., carpools, vanpools, buses). HOV facilities provide efficiencies for maximizing person flow while minimizing overall person delay. Therefore, in general, HOV lanes are congestion-dependent improvements and produce substantial benefits where extreme congestion occurs regularly on freeways. HOV facilities should be considered in these situations to encourage motorist to shift from single occupancy vehicles (SOV) to high occupancy vehicles.

Management of HOV operations may be accomplished by a range of technological and manpower means. The level of control needed will depend upon the user demand, system size, HOV lane type, geometric design, hours of operation, and operational costs. Surveillance, communications, and control are vital components with respect to, 2+ versus 3+ occupancy requirements, incident management strategies, and enforcement requirements. HOV facilities should be part of a complete ridesharing program that includes the provision of support facilities and programs (e.g., park-and-ride lots, park and pool lots), and information services to facilitate both bus and rideshare needs.

44-3.02(b) Types of HOV Lanes

Within an existing freeway corridor, there are at least three types of HOV lanes—separated roadway, concurrent-flow lane, and contra-flow lane. These are illustrated in Figure 44-3.I and are further discussed as follows:

1. Separated HOV Roadway. Figures 44-3.J and 44-3.K illustrate separated HOV facilities. Consider the following:

    a. Location. Separated HOV roadways may be located in the median of the freeway, adjacent to the freeway, or on an independent alignment depending on available space. Consideration should be given to factors such as traffic operations in interchange areas and ramps, access to intermodal facilities, access to and from the facility, and traffic management during construction.

    b. Design Criteria. Design criteria for separated HOV roadways are typically high by the very nature of the commitment of funds and time to implement and are considered a long-term solution.

    c. Enforcement. The enforcement needs for a barrier-separated HOV facility can be lessened somewhat because access along the facility is largely controlled at selected breaks in the barrier, as a result, violators are deterred.

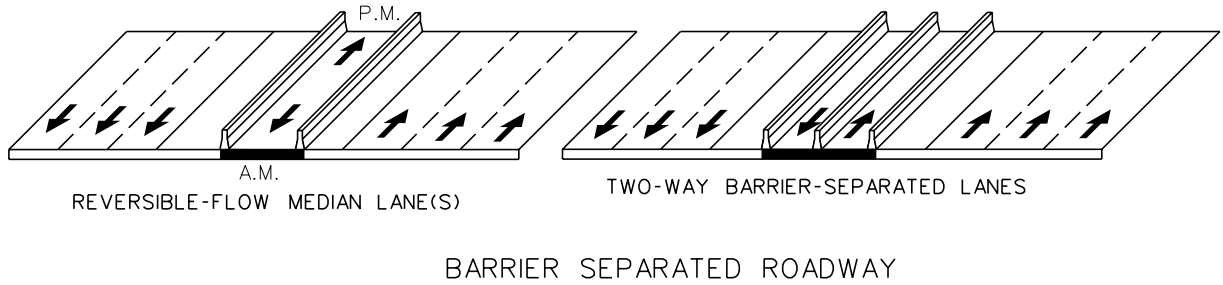

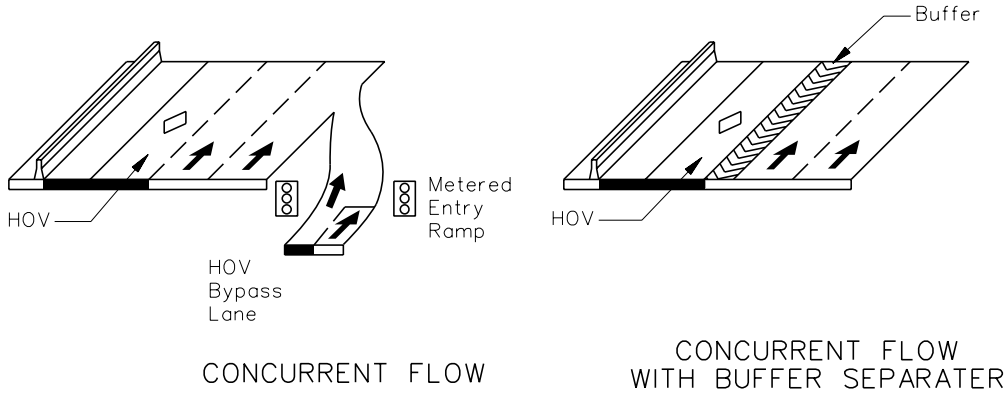

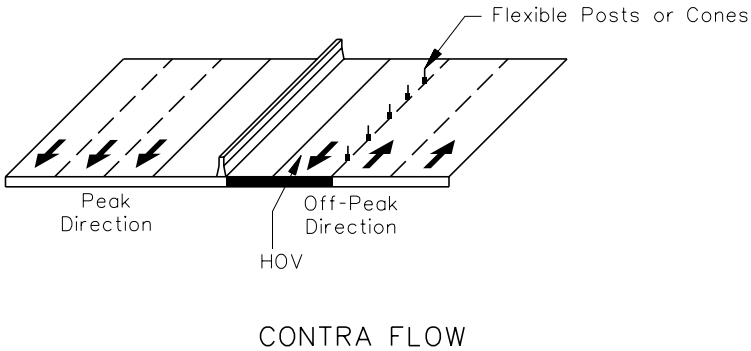

HOV CONCEPTS

Figure 44-3.I

HARD COPIES UNCONTROLLED

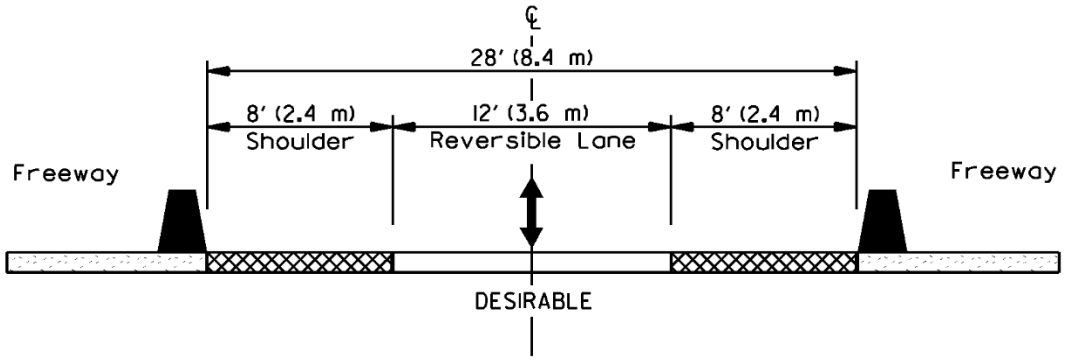

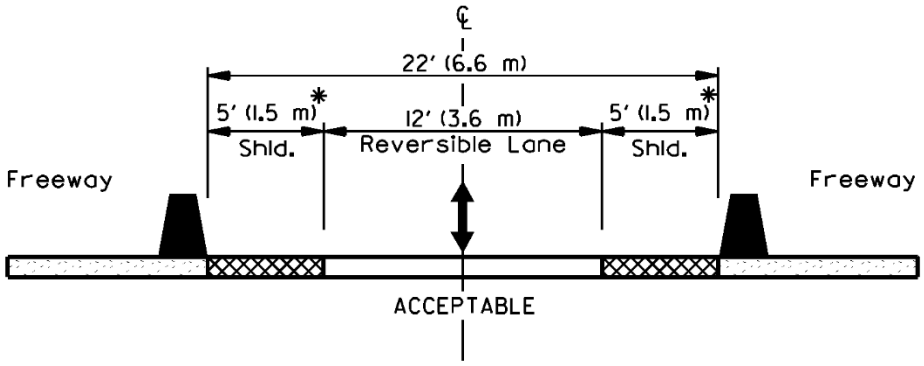

* Lateral clearances may be combined to provide a single 8′ (2.4 m) shoulder on one side or the other.

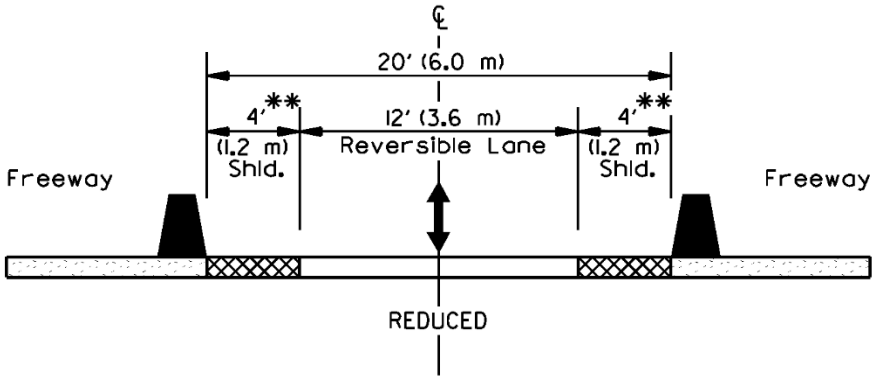

** Lateral clearances may be combined to provide a single 6′ (1.8 m) shoulder on one side or the other.

BARRIER SEPARATED HOV FACILITY CROSS SECTIONS
(Single-Lane Reversible Flow)

Figure 44-3.J

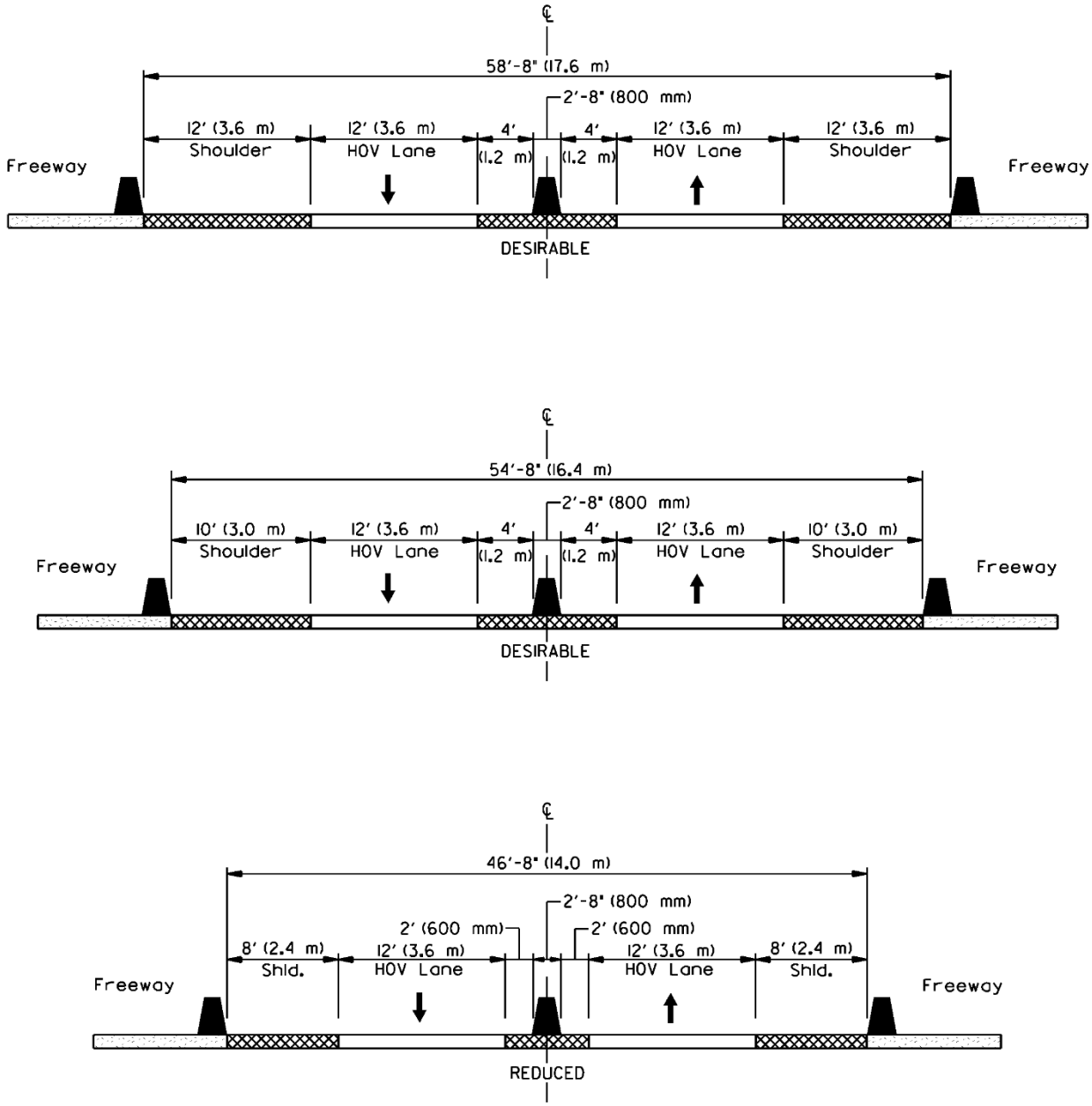

BARRIER SEPARATED HOV FACILITY CROSS SECTIONS
(Two-Way Flow)

Figure 44-3.K

HARD COPIES UNCONTROLLED

d. Access. Entering and exiting from an HOV to an interchange requires weaving across mixed-flow traffic lanes. To avoid this friction, access may be provided directly to the HOV, which can save users additional travel time. Ramps can be dropped down/up from a crossroad (low speed) or with a fly-over ramp (high speed).

2. Concurrent-Flow HOV Lanes. In contrast to barrier-separated facilities, concurrent-flow HOV lanes provide no more than a paint stripe or painted buffer adjacent to the through lanes; see Figure 44-3.L. Concurrent-flow HOV lanes can be implemented as interim retrofit by reducing the inside shoulder width and widening shoulders over time to enhance safety. Consider the following:

a. Access. Concurrent-flow HOV lanes provide for frequent access and are suited for HOV operations that can revert back to general purpose lanes while barrier separated facilities are more applicable to 24-hour HOV operation.

b. Enforcement. The lack of a physical barrier and ease of access increases the need for enforcement when compared to a separated HOV roadway; therefore, design treatments for enforcing concurrent flow HOV's is critical. Where a minimum 10 ft (3.0 m) wide shoulder cannot be provided contiguously adjacent to the HOV lane, enforcement will be difficult and violators may reach such proportions that HOV's may lose their time savings. Where narrow inside shoulders exist, it is possible to accommodate enforcement pockets by narrowing the median shoulder on alternating sides of the center barrier.

c. Incident Management. Incident management for HOV's are normally handled in the same manner as applied to freeways. Narrow inside shoulders also require real-time incident response.

3. Contra-flow Lanes. Contra-flow lanes provide an exclusive lane for HOV's traveling in the peak direction by removing a lane from service in the off-peak direction in cases where the level of service will not be seriously affected; see Figure 44-3.I. Contra-flow lanes are often reserved for buses only; however, vanpools and taxis have been successfully introduced through special training and licensing.

44-3.02(c) Design

When designing HOV lanes, consider the following:

1. HOV Types. Section 44-3.02(b) discusses the common HOV types used by the Department.

2. Design Criteria. In general, the same criteria for urban freeways also apply to HOV facilities (e.g., 12 ft (3.6 m) lanes, horizontal alignment, vertical alignment, cross slopes). Urban freeway criteria are presented in Section 44-5.

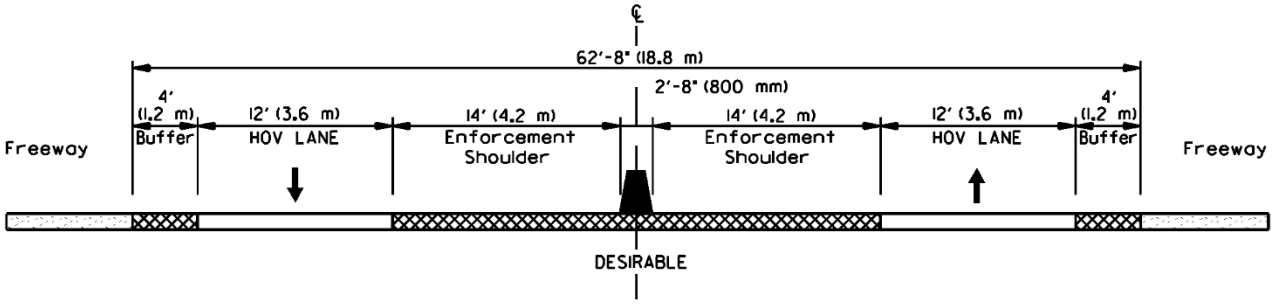

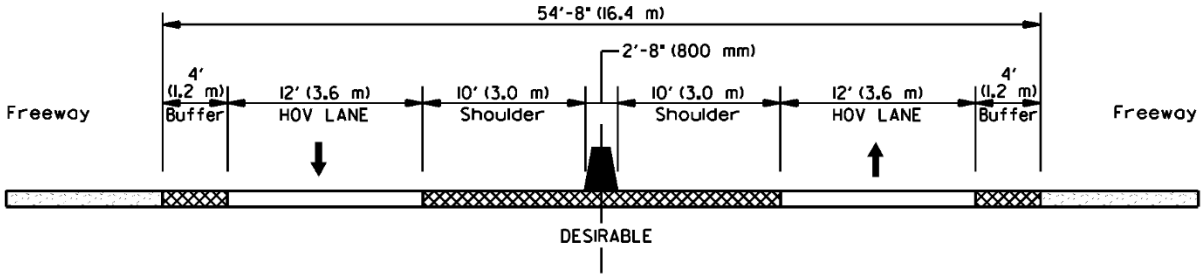

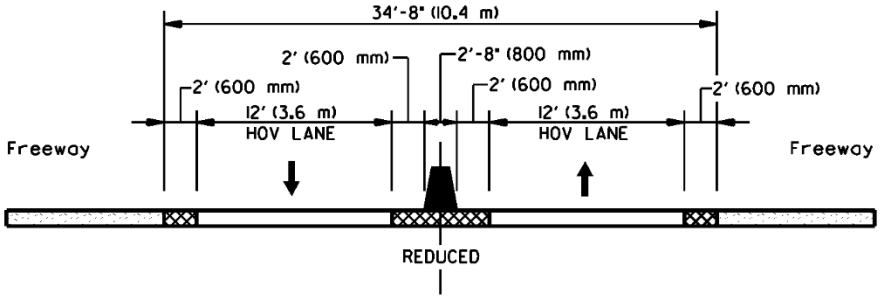

BARRIER SEPARATED HOV FACILITY CROSS SECTIONS
(Two-Way Concurrent Flow)

Figure 44-3.L

HARD COPIES UNCONTROLLED

3. Shoulder Widths. Where barrier separated HOV facilities are provided (e.g., two-way flow), desirably at least one shoulder next to the HOV lane should be 10 ft (3.0 m) wide for emergency stops and at a minimum 8 ft (2.4 m). At a minimum, provide 2 ft (600 mm) offset to the median barrier.

4. Sight Distance. Where concrete barrier is used to separate the HOV lanes from adjacent and/or opposing lanes, give special consideration to any sight distance restrictions that may be caused by a concrete barrier through horizontal curves.

5. Separation. Where an HOV lane is adjacent to the through freeway lanes (i.e., no median barrier), desirably provide a 2 ft to 4 ft (600 mm to 1.2 m) buffer, or spatial separation, between the HOV lane and adjacent through lane. In general, it is more desirable to provide a narrow right-side clearance between the HOV lane and the through traffic lanes plus a wide left-side shoulder than to have a wide common shoulder as the buffer. The wide left shoulder also facilitates enforcement, which is key to the success of an HOV facility.

6. Access Ramps. Access to the HOV lane will vary according to the type of HOV facility used and space available. Access may be obtained by shared ramps, dedicated access ramps, and/or slip ramps from the mainline or crossroads. In general, design HOV ramps using the same criteria as for interchange ramps. However, consider the following:

   a. Design Vehicle. The design vehicle for HOV lanes will typically be a bus. The absence of trucks may allow for narrower widths and reduced vertical clearances.

   b. Signing. Advance signing and pavement markings are critical to ensure proper operation of the HOV ramps.

7. Incident Management. Special consideration must be given to incident management to ensure the HOV facility continues to operate after an incident (e.g., crash, disabled vehicle).

8. Additional Guidance. For additional guidance on determining candidate HOV freeway segments and design of HOV lanes, see the AASHTO publication *Guide for the Design of High-Occupancy Vehicles*.

44-3.03 Lighting

Nighttime traffic volumes, nighttime crashes, and geometric complexity will significantly influence the need for freeway lighting. In addition to the following, Chapter 56 provides further guidance on highway lighting:

1. Urban. Urban freeways with closely spaced interchanges and substantially developed adjacent areas are generally illuminated. The geometric and traffic complexities are such that drivers need to detect and react to conditions 500 ft to 1200 ft (150 m to 350

m) in front of their vehicle. Also, vehicle headlamps cannot be relied on to provide adequate lateral visibility on very wide roadways.

2. Suburban. On suburban freeways without lighting, a reduction in visual sensitivity due to transient adaptation effects can also result from the spillover of lighting from adjacent development. This ambient illumination is distracting to the driver, causes veiling glare, and reduces attention to freeway signs. In areas where the surrounding areas are brightly illuminated, freeway lighting is typically warranted.

3. Rural. In rural areas, lighting is sometimes deemed justified at interchanges, especially those with complex geometry or multiple merging traffic points. Energy availability and routine maintenance costs are important factors that influence the decisions to provide a lighting system.

4. Interchanges. Because interchanges have the greatest probability for traffic conflict requiring quick driver decisions, lighting at high-density, complex freeway interchanges can be a useful tool with a high potential for crash reduction. Two designs of interchange lighting systems are commonly warranted—complete interchange lighting and partial interchange lighting. Complete interchange lighting provides considerably better driver performance and traffic operations than partial interchange lighting. Partial interchange lighting is sometimes used based on the premise that it provides some of the benefits attributable to complete interchange lighting at a lower operating cost. In partial interchange lighting, only the freeway gore area, major changes in ramp alignment, and the area where the ramp joins the crossroad are lighted.

44-3.04 Landscaping

The highway should be designed to blend into its environment, see Chapter 59. This may involve landscaping the roadside, either during the construction or later as an improvement. Proper use of landscaping can contribute to the safe operation of freeways by reducing glare from oncoming vehicles, indicating changes in road and ramp alignments, and controlling snow drift. At the same time, ensure that any additions do not sacrifice available operational and safety features. Also, consider the following guidelines:

- Locate tree and shrub plantings so that adequate sight distance will be maintained when mature growth is achieved.
- Give special consideration to selecting flora that will not mature into large or multiple trunks that can halt or snag a vehicle.
- Plant small trees at least 10 ft (3 m) away from other small trees and breakaway devices (e.g., sign supports) to reduce the possibility of a vehicle striking two objects at essentially the same time.
- Do not plant trees and shrubbery in front of barriers and other safety devices.

HARD COPIES UNCONTROLLED

- Before planting trees on the inside of a curve, consider the restriction they might impose on the sight distance, especially when they mature.

HARD COPIES UNCONTROLLED

44-4 INTERCHANGES/GRADE SEPARATIONS

On fully access-controlled facilities, each intersecting highway must be terminated, rerouted, or provided with a grade separation or interchange. The importance of the continuity of the crossing road, the feasibility of alternative routes, traffic volumes, construction costs, environmental impacts, etc., must be evaluated to determine which option is the most cost effective.

44-4.01 Interchanges

Section 37-1 discusses several guidelines that must be considered in determining whether or not an interchange should be provided. In general, interchanges are provided on freeways at:

- all freeway-to-freeway crossings;
- all marked highways, unless determined inappropriate; and
- other highways based on the anticipated demand for regional access.

Section 37-1 also discusses the procedures for adding or revising an interchange access point to the freeway system.

44-4.02 Grade Separations

44-4.02(a) Justification

For each crossroad along the freeway, which is not an interchange, a determination must be made whether the crossroad should be closed, rerouted, or provided with a grade separation. This justification is made primarily by comparing the respective cost and social factors for each alternative. Section 44-4.03 discusses the process for determining the feasibility of closing a facility or providing a grade separation. Although cost is a primary factor, also review the following considerations:

1. Operations. Grade separations should be of sufficient number and adequate capacity to accommodate crossroad traffic, traffic diverted to crossroads from other roads and streets terminated by the freeway, and the traffic generated by access connections to and from the mainline.

2. Rural/Urban Locations. In rural areas, the location of grade separation structures is determined by the access and feasibility study. For urban areas, usually grade separation structures are provided every three to four blocks for continuity.

3. Local Considerations. Closing the crossroad can have a significant effect on local users and the overall local road system integrity, due primarily to changes in travel patterns. These may include:

    a. School Bus Routes. The effect of a road closure on the bus route system can be two-fold. There may be an increase in the operating cost due to longer buses routes and an increase in the travel time for school children.

b. Emergency Personnel. The financial effect of the longer detour route on emergency vehicles is generally not a concern. However, the extra response time could adversely affect the health and safety of local citizens.

c. Mail Routes. Mail delivery is normally a minor consideration. Although there may be extra financial burdens, these are generally minor because most routes can be rearranged.

d. Businesses/Farms. Evaluate access to businesses and farms to ensure that these operations can continue without severe economic hardship. For businesses, the road closure can significantly affect their deliveries and the number of customers they receive (e.g., customers may be unwilling to travel the extra distance). For farmers, the road closure may require the transportation of large, slow-moving farm equipment along busy alternative facilities.

e. Social Factors. Parks, churches, cemeteries, public facilities, and other areas or buildings of social concern generally cannot be relocated. Limited access to these facilities may create undue hardship if a specific road is closed.

f. Land Use Planning. Consider future land use within a suburban environment to ensure adequate access and reciprocation factors are available.

44-4.02(b) Design

When designing grade separations, the following guidelines will be applicable:

1. Design Criteria. Section 33-5, Chapter 39, and Part V, Highway Systems, provide geometric design criteria for structures including clear roadway bridge widths, vertical clearances, horizontal clearance, shoulder widths, etc.

2. Over versus Under. The decision on whether the freeway should be over or under the crossroad is normally dictated by topography and cost. If the topography does not favor one profile over the other, use the following guidelines to decide which highway should cross over the other:

   a. Cost-Effectiveness. The designer should consider which alternative will be more cost effective to construct. Some elements to consider are the amount of embankment and excavation required, span lengths, angle of skew, gradients, sight distances, alignment, vertical clearances, constructability, traffic control, right-of-way, drainage, soil conditions, and construction costs.

   b. Classification. Select the alternative that provides the highest design level for the mainline road. Typically, the crossroad has a lower design speed and, therefore, the minor road can be designed with steeper gradients, lesser roadway widths, steeper side slopes, etc.

   c. Future Crossings. Plan future crossings and/or structures as overpasses over the mainline. Overpasses are easier to install and will be less disruptive to the freeway when they are constructed in the future.

HARD COPIES UNCONTROLLED

3. Vertical Clearance. The allowable vertical clearance for rural and urban interstate projects is 16 ft 09 in for new construction/reconstruction. For urban interstates within the single routing with a 16 ft 09 in vertical clearance, 15 ft 00 in is permitted. Refer to the figures in Section 44-6 for maps of single routing in the urban areas of Peoria, the Quad Cities, the Metro-east St. Louis, and the Chicago metropolitan. See Figure 33-5.A for vertical clearance requirements. If these vertical clearances cannot be met, a design exception must be sought. Refer to Section 31-7.04(c) for directions to process a design exception for vertical clearances over interstates.

4. Horizontal Distance. The distance required for adequate design of a grade separation depends on the design speed, the roadway gradient, and the amount of rise or fall necessary to affect the separation. Figure 44-4.A can be used during Phase I to quickly determine whether a grade separation is feasible for a given set of conditions, what gradients may be involved, and what profile adjustments may be necessary on the crossroad. Also, carefully study sight distance requirements because these will often dictate the required horizontal distance along the crossroad. When using Figure 44-4.A, consider the following:

   a. Minimum Horizontal Distances. The plotted lines on Figure 44-4.A are derived assuming the same approach gradient on each side of the structure. However, values of “D” from the figure also are applicable to combinations of unequal gradients. Distance “D” is equal to the length of the initial vertical curve, plus one-half the central vertical curve, plus the length of tangent between the curves. Lengths of vertical curves are based on the stopping sight distance. However, longer vertical curves are desirable from an aesthetic and safety standpoint. Conversely, longer curve lengths may be costlier due to increased earthwork quantities. However, these additional costs may be a less important consideration if crossroads or access points exist near the grade separation structure.

   b. Maximum Gradient. The lower terminal point of each gradient line on Figure 44-4.A, marked by a small symbol, indicates the distance where the tangent between the curves is zero and below which a design for the given grade is not feasible (i.e., a profile condition where the minimum central and end curves for the gradient would overlap).

   c. Restricted Gradients. For the usual profile rise or fall required for a grade separation (“H” of 25 ft (7.5 m) or less), do not use gradients greater than 3% for a design speed of 70 mph (110 km/h), 4% for 60 mph (100 km/h), 5% for 50 mph (80 km/h), and 6% for 40 mph (60 km/h). For values of “H” less than 25 ft (7.5 m), use flatter gradients.

   d. Relationship. For a given “H” and design speed, distance “D” is only shortened a negligible amount by increasing the gradient. However, the distance “D” varies to a greater extent for a given “H” and “G” with respect to the design speed.

HARD COPIES UNCONTROLLED

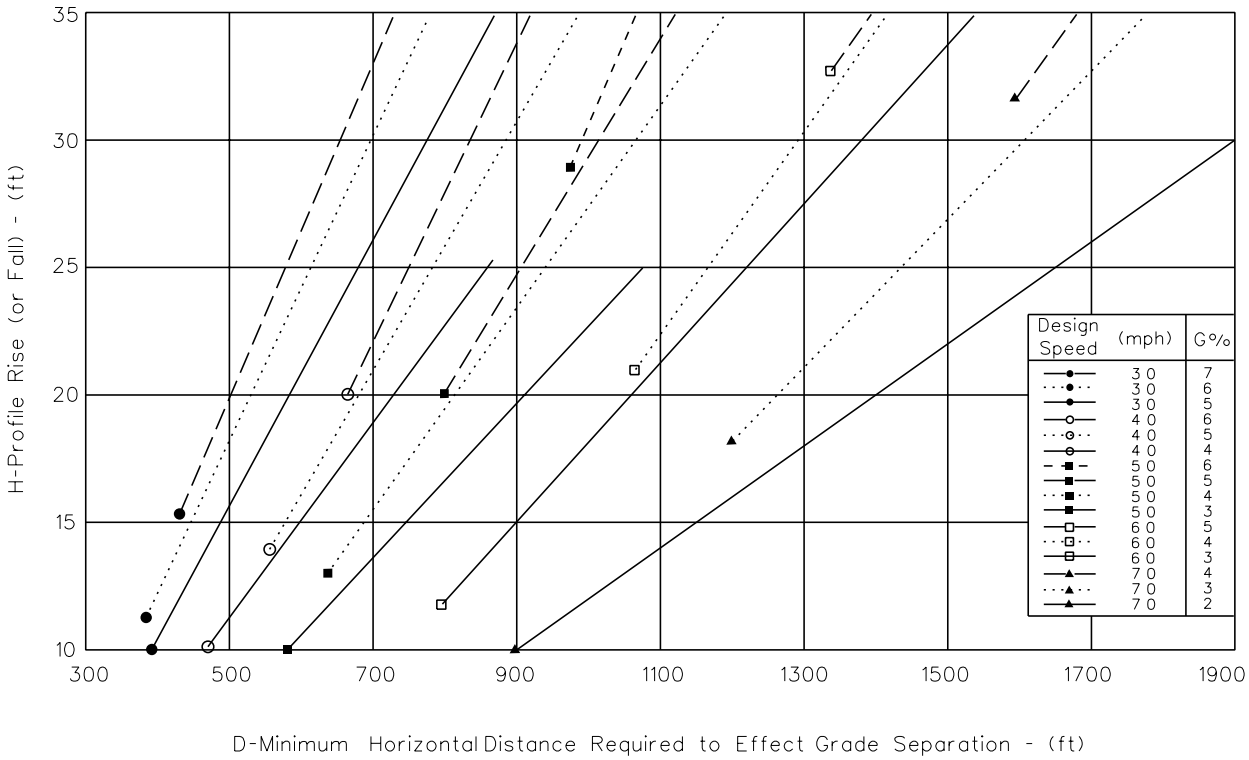

Note: Symbols on ends of lines indicate the point below which the grade is not feasible, necessitating the use of next flatter curve.

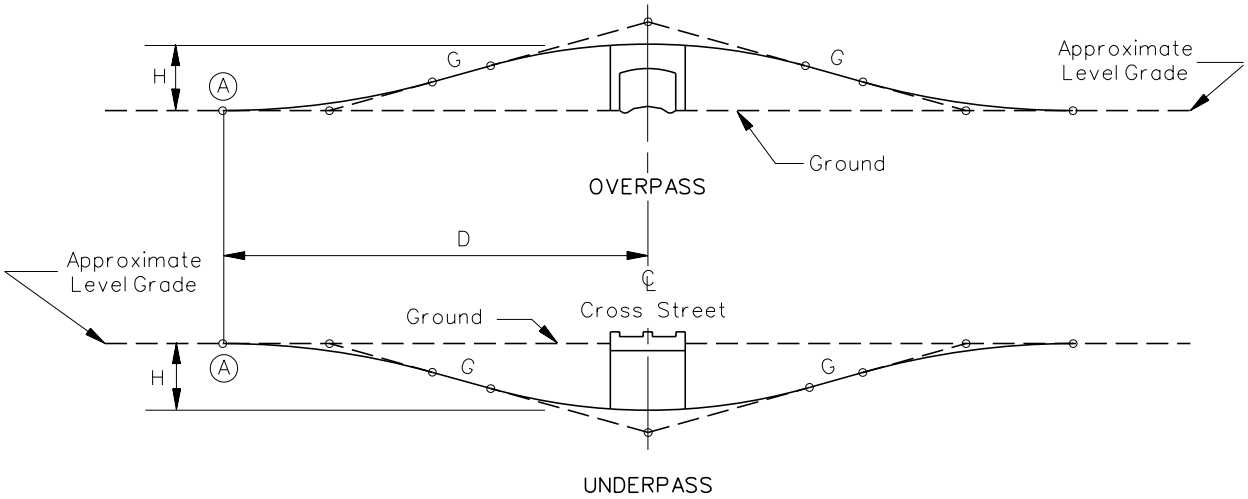

GRADE SEPARATION DETERMINATION
(US Customary)

Figure 44-4.A

HARD COPIES UNCONTROLLED

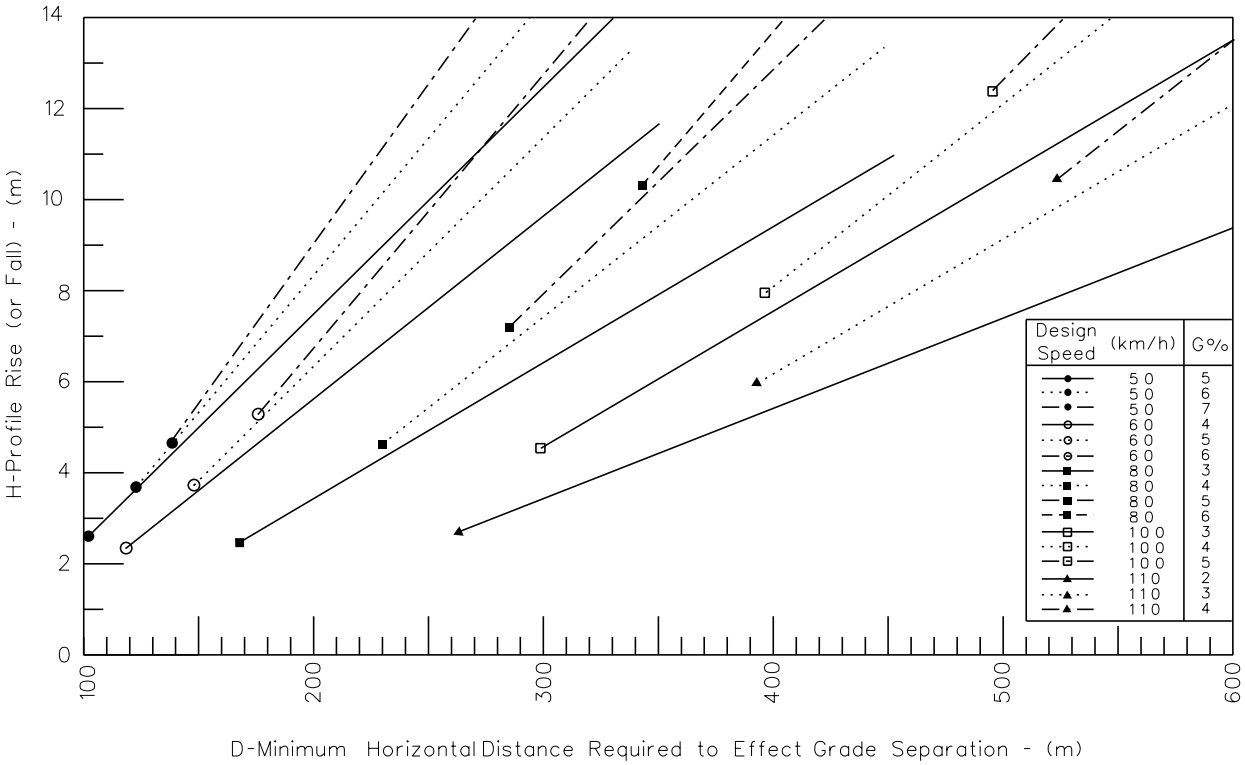

Note: Symbols on each line indicate the point below which the grade is not feasible, necessitating the use of the next flatter grade.

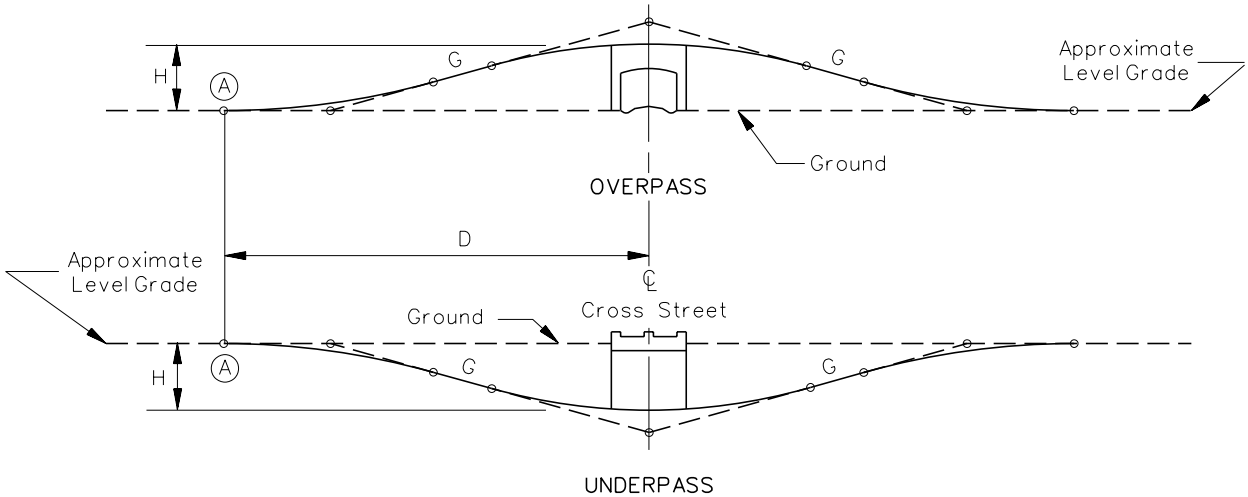

GRADE SEPARATION DETERMINATION (Metric)

Figure 44-4.A

e. Elevation. Considering the vertical clearance and structural depth, an elevation distance of "H" is typically between 23 ft and 25 ft (7.0 m and 7.5 m) for the grade separation of two highways. "H" is typically the same for a freeway under a railroad. For a railroad facility under a freeway, "H" is typically 30 ft to 31 ft (9.2 m to 9.4 m).

f. Design Speed. To provide additional safety at rural grade separations where the crossroad passes over the freeway, consider designing the crest vertical curve with a design speed of 55 mph (90 km/h) or greater.

44-4.03 Feasibility Analysis

44-4.03(a) Procedure

When determining the feasibility of closing a crossroad or providing a grade separation on the crossroad, a cost analysis must be completed. This will include comparing the additional road user costs for closing the facility against the amortized annual cost of building a grade separation. The following steps will apply in making this analysis:

1. Data Gathering. The first step is to gather all the necessary data for the cost analysis. This includes a map showing the location of other possible crossings, traffic volumes, construction costs, unit prices, service life for various construction elements, possible detour routes, length of alternative routes, a field review of the area, and possibly meeting with farmers, businessmen, the local postmaster, and local school officials.

2. Road Closure. The cost of the road closure is based on the increase in cost for road users to travel the additional distance to reach their destination. The computation of these costs is based on traffic volumes, distribution of vehicular types (e.g., passenger cars, trucks, buses), additional detour distance, and variable operating costs. Figure 44-4.B provides a form that can be used in the road closure analysis. The following steps will apply to Figure 44-4.B:

   a. Traffic Volume/Composition. Use the latest data available for traffic volumes and vehicle composition. For local roads, this information can be obtained from the district and/or Chicago Area Transportation System. Adjust the traffic volumes for the design year (e.g., 20 years). For most analyses, the crossroad traffic will typically be the single most important element in influencing the cost analysis for grade separations.

   b. Alternative Route Distances. Determine the most practical route that will be taken and measure these distances from a local map. The most practical route will typically be obvious. However, in some cases, it may be beneficial to talk with the appropriate local officials (e.g., county officials, emergency personnel, local school district).

HARD COPIES UNCONTROLLED

NAME OF CROSSROAD: _____ FREEWAY ALTERNATIVE:_____

A. GENERAL CONDITIONS:

1. Traffic on crossroads (ADT _____) _____
2. School buses (daily trips/max. extra distance per trip if closed) _____
3. Mail Route (max. extra distance per day if closed) _____
4. Emergency Vehicles (max. extra distance if closed) _____
5. Approximate Road User Cost (per mile (kilometer)):
   PV - _____; SU - _____; MU - _____.
6. Approximate Vehicular Traffic Distribution (%):
   PV - _____; SU - _____; MU - _____.

B. ALTERNATIVE TRAFFIC ROUTE IF ROAD IS CLOSED:_____

_____

Local Map

C. ROAD USER COSTS:

DAILY COST IF ROAD IS CLOSED								
Point	Distance mile (km)	PV ADT ( )	Cost/mile (Cost/km)	SU ADT ( )	Cost/mile (Cost/km)	MU ADT ( )	Cost/mile (Cost/km)	Daily Cost
Totals:								
DAILY COST IF ROAD IS OPEN								
1. Daily Increase in Road User Costs:							$	
2. Annual Increase in Road User Costs (Item 1 x 365):							$	

JUSTIFICATION FOR GRADE SEPARATION STRUCTURE
(Part 1)

Figure 44-4.B

c. Road User Costs. Road user costs are based on the variable operating cost of operating a vehicle. Do not include the fixed (ownership) costs. The latest road user costs can be obtained from BDE. Variable operating costs consist of:

- nonscheduled repairs and maintenance,
- gasoline,
- oil,
- tires,
- gasoline tax (State and Federal),
- oil tax (Federal),
- tire tax (Federal), and
- parking and tolls.

d. Alternative Route Costs. The daily road user costs for the alternative route can be determined by multiplying each vehicular cost per mile (kilometer) by the distance of the detour. Do this for each vehicular type and add the total costs together.

e. Open Road Costs. Determine the daily road user costs for each vehicular type assuming the road will remain open by multiplying the distance of the existing route by the road user costs.

f. Final Costs. Determine the increase in road user costs by subtracting the non-detoured costs from the road closure costs. Multiply this number by 365 to determine the annual cost.

3. Grade Separation Structure. For comparison purposes, determine the annualized costs for constructing the grade separation. These include right-of-way acquisition, construction costs, and other mitigating items (e.g., environmental factors). Figure 44-4.C provides a form that may be used to determine these annualized costs. The following steps apply to Figure 44-4.C:

a. Base Cost. Estimate quantities or use a generalized quantity (e.g., cost per square foot (square meter) of bridge deck, cost per square foot (square meter) of pavement). Use these quantities in conjunction with the average weighted unit prices to develop the overall grade separation costs. Also, include the cost for any necessary mitigation measures (e.g., relocating businesses, environmental factors, wetland mitigation, compensatory storage) that may be involved with providing a grade separation. Chapters 12, 64, and 65 provide additional guidance in determining quantities and cost estimates for Phase I reports.

b. Service Life. Determine the service life for the various construction items. These can be found in Chapter 11.

HARD COPIES UNCONTROLLED

NAME OF CROSSROAD: _____ FREEWAY ALTERNATIVE: _____

Item	Qty	Unit Cost	Total Cost	Service Life	Amort. Factor	Annual Cost
Right-of-Way acre (ha)						
Tree Removal acre (ha)						
Highway Grade Structure						
1. Grading						
a. Earth Excavation yd^3 (m^3)						
b. Embankment yd^3 (m^3)						
2. Drainage Culverts ft (m)						
3. Pavement						
a. _____ Surface Course ft^2 (m^2)						
b. _____ Base Course ft^2 (m^2)						
c. _____ Shoulders ton (ton)						
4. Structure _____ o-o _____ ft^2 (m^2)						
Guardrail ft (m)						
Roadside Improvement						
1. Seeding acre (ha)						
2. Landscaping (L.S.)						
Miscellaneous						
TOTAL COST IF ROAD IS KEPT OPEN						

o-o = out to out width

Annual Increase in Road User Costs if Road is Closed ..... $_____

Annual Grade Separation Cost if Road is Kept Open..... $_____

Proposed Roadway Cross Section:

Recommendation and Comments:

JUSTIFICATION FOR GRADE SEPARATION STRUCTURE
(Part 2)

Figure 44-4.C

c. Annual Costs. Amortization factors are based on the service life of the construction item and the assumed discount rate for capital improvements, typically 3% or 4%. Amortization factors are available in most engineering economic textbooks. Annualized costs are computed by multiplying the base or total cost of the various construction elements by the amortization factor for capital recovery.

d. Total Costs. Sum the annual costs for each element to determine the total annual cost for providing the grade separation.

4. Comparison. Compare the annual road user costs from Step 2 with the annual grade separation costs determined in Step 3. If the value from Step 3 is larger, then the grade separation is not cost effective. If the value from Step 2 is larger, than the grade separation is considered cost effective.

5. Miscellaneous Considerations. If a structure is justified based on costs, then no other analysis will be required. However, if the closure cost to road users is less than the cost of the grade separation structure, then consider the factors listed in Section 44-4.02(a).

6. Summary Sheet. Figure 44-4.D can be used to summarize the results for all the crossings of each alternative affected by the proposed freeway.

44-4.03(b) Example Problem

The following is an example calculation to determine whether to close a crossroad or provide a grade separation over a new freeway.

****

Example 44-4.1

Given: New Rural Freeway
Design Year Crossroad Traffic Volumes — 80 ADT (2022)
Traffic Distribution — 90% passenger cars, 10% SU vehicles
Existing Route Length — 1.74 miles
Alternative Route Length — 5.16 miles
Variable Operating Costs — passenger cars - $0.31/mile, SU - $1.05/mile, MU - $1.21/mile
Discount Factor — 4%
Proposed Roadway Cross Section — 20 ft traveled way, 3 in Class I Surface, 8 in Aggregate Base, 4 ft Earth Shoulders

Problem: Determine whether to close the crossroad (TR79) or provide a grade separation.

Solution: Use the procedures in Section 44-4.03(a).

HARD COPIES UNCONTROLLED

FREEWAY ALTERNATIVE: _____

Crossroad	GENERAL CONDITIONS				COST — ROAD CLOSED			COST — ROAD OPEN		PROPOSED ACTION	
	Public Service Adversity										
	( ) ADT	Mail (mile) (km)	School Bus (no./mile) (no./km)	Emerg. Veh. (mile) (km)	Alternative Crossing	Adverse Travel (mile) (km)	Annual User Cost	Constr. Cost	Annual Cost	Recommendations	Remarks

SUMMARY OF GRADE SEPARATION/ROAD CLOSURE INVESTIGATIONS

Figure 44-4.D

HARD COPIES UNCONTROLLED

Step #1: Gather data. Quantities for the grade separation are shown in Figure 44-4.F.

Step #2: Determine the cost for closing the road. These calculations are shown in Figure 44-4.E. The extra distance for the detour is 3.42 miles. The average annual cost for closing the road is $37,675.

Step #3: Determine the cost for the grade separation structure. Service lives for the various construction items can be found in Chapter 11 and are shown in the table. Amortization factors for a 4% discount rate can be obtained from an engineering economics textbook. Use the capital recovery factor. The annual cost for providing a grade separation is $38,776. These calculations are shown in Figure 44-4.F.

Step #4: Comparing the annual grade separation costs ($38,776) against the road closure cost ($37,675), the grade separation cannot be justified economically.

Step #5: The road closure would cause significant delays to school bus and emergency vehicle travel times; see Section 44-4.02(a). When considering these factors and the closeness of the annual costs (i.e., less than 5%), a grade separation can be justified for this location.

Step #6: This process would be completed for each crossroad that intersects with the freeway to determine if a grade separation structure should be provided or the road closed. The results can be summarized in a table similar to Figure 44-4.D. In some cases, it may be appropriate to propose building a frontage road or service drive between two adjacent roads.

****

HARD COPIES UNCONTROLLED

NAME OF CROSSROAD: TR 79 over FAP 406 FREEWAY ALTERNATIVE: A & B

A. GENERAL CONDITIONS:

1. Traffic on crossroads (ADT 2022) 80
2. School buses (daily trips/max. extra distance per trip if closed) 2 min/14 miles
3. Mail Route (max. extra distance per day if closed) 16 miles
4. Emergency Vehicles (max. extra distance if closed) 8 miles
5. Approximate Road User Cost (per mile):
   PV - $0.31/mile; SU - $1.05/mile; MU - $1.21/mile.
6. Approximate Vehicular Traffic Distribution (%):
   PV - 90; SU - 10; MU - 0.

B. ALTERNATIVE TRAFFIC ROUTE IF ROAD IS CLOSED: TR 79 to TR 87 to TR 79 to TR 106

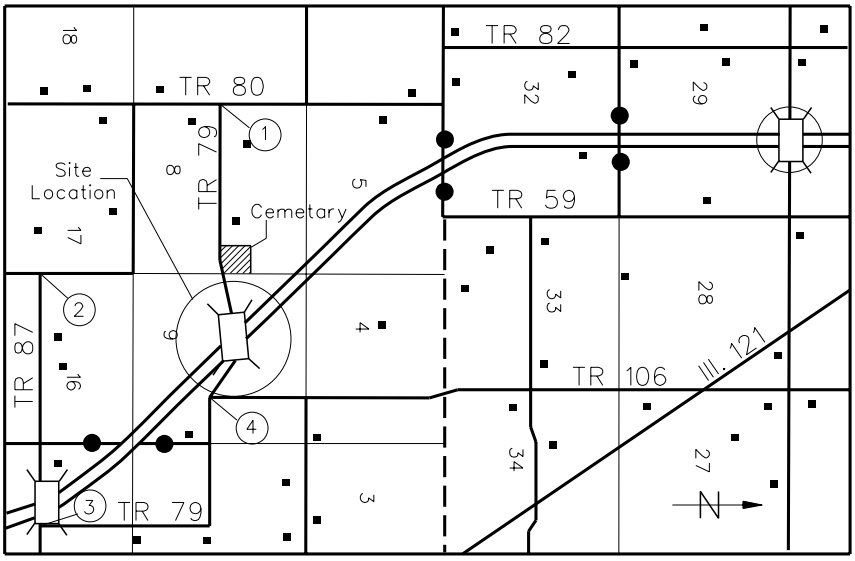

C. ROAD USER COSTS:

DAILY COST IF ROAD IS CLOSED								
Point	Distance (mile)	PV ADT (2022)	Cost/Mile	SU ADT (2022)	Cost/Mile	MU ADT (2022)	Cost/Mile	Daily Cost
1-2	1.87	72	0.31	8	1.05			55.60
2-3	1.55	72	0.31	8	1.05			47.62
3-4	1.74	72	0.31	8	1.05			53.45
Totals:	5.16							156.67
DAILY COST IF ROAD IS OPEN								
1-4	1.74	72	0.31	8	1.05			53.45
1. Daily Increase in Road User Costs:								$ 103.22
2. Annual Increase in Road User Costs (Item 1 x 365):								$ 37,675

JUSTIFICATION FOR GRADE SEPARATION STRUCTURE
(Example 44-4.1)

Figure 44-4.E

NAME OF CROSSROAD: TR79 over FAP 406 FREEWAY ALTERNATIVE: A & B

Item		Qty	Unit Cost	Total Cost	Service Life (years)	Amort. Factor	Annual Cost
Right-of-Way	(acre)	11.50	2300	26,450	100	0.04081	1079
Tree Removal	(acre)						
Highway Grade Structure							
1. Grading							
a. Earth Excavation	(yd^3)	22,900	3.80	87,020	50	0.04655	4051
b. Embankment	(yd^3)	—					
2. Drainage Culverts 2@ 36 in (125 ft, 138 ft)	(ft)	263	71.63	18,839	40	0.05052	952
3. Pavement							
a. 3 in Class I Surface Course	(ft^2)	44,300	0.60	26,580	25	0.06401	1701
b. 8 in Aggregate Base Course	(ft^2)	44,300	0.93	41,199	25	0 06401	2637
c. Earth Shoulders	(ton)						
4. Structure 32 ft (0-0) x 230 ft	(ft^2)	7360	76.00	559,360	50	0.04655	26,038
Guardrail	(ft)	575	15.25	8769	20	0.07358	645
Roadside Improvement							
1. Seeding	(acre)	6.55	3197	20,940	50	0.04655	975
2. Landscaping	(L.S.)	L.S.	15,000	15,000	50	0.04655	698
Miscellaneous							
TOTAL COST IF ROAD IS KEPT OPEN				$804,157			$38,776

o-o = out-to-out width

Annual Road User Cost if Road is Closed ..... $ 37,675

Annual Grade Separation Cost if Road is Kept Open ..... $ 38,776

Proposed Roadway Cross Section:

Recommendation and Comments:

JUSTIFICATION FOR GRADE SEPARATION STRUCTURE
(Example 44-4.1)

Figure 44-4.F

HARD COPIES UNCONTROLLED

44-5 TABLES OF DESIGN CRITERIA

Figures 44-5.A, 44-5.B, 44-5.C, and 44-5.D present the Department's design criteria for freeway projects. The designer should realize that some of the cross section elements included in the figures (e.g., flush concrete barrier median) are not automatically warranted in the project design. The values in the figures only apply after the decision has been made to include the element in the highway cross section.

Design Element				Manual Section	Rural One-Way DHV: 2300 - 3400 (1) Urban One-Way DHV: 2800 – 4300 (1)	Rural One-Way DHV: Under 2300 (1) Urban One-Way DHV: Under 2800 (1)
Design Controls	Design Forecast Year			31-4.02	20 Years	
	*Design Speed			31-2	Rural: 75 mph **(2)** Urban: 60 mph	
	Access Control			35-1	Full Control	
	Level of Service			31-4.04	Rural: B Urban: C **(3)**	
Cross Section Elements	*Traveled Way Width			34-2.01	2 @ 36′	2 @ 24′
	Shoulder Width	Right	Total Width	34-2.02	10′	10′
			Paved		10′ **(4)**	10′ **(4)**
		Left	Total Width		10′	8′
			Paved		10′ **(5)**	6′
	Auxiliary Lanes	Lane Width		37-2.05	12′	
		Shoulder Width			Right: 10′ Left: 8′ (Minimum)	
	Cross Slope	*Travel Lane		34-2.01	3/16″/ft for lanes adjacent to crown **(6)**	
		Shoulder		34-2.02	1/2″ /ft	
	Median Width	Depressed		34-3	Minimum: 60′	Minimum: 56′
		Flush (Concrete Barrier)			23′ **(7)**	20′ **(7)**
	Clear Zone			38-3	**(8)**	
Roadway Slopes	Side Slopes	Cut Section	Front Slope	34-4.03	1V:6H	
			Ditch Bottom Width		4′ **(9)**	
			Back Slope		1V:3H **(10)**	
		Rock Cut		34-4.05	—	
		Fill Section		34-4.02	1V:6H to Clear Zone; 1V:3H max. to Toe of Slope **(11)**	
	Median Slopes			34-3	1V:6H	
Bridges	New and Reconstructed Bridges	*Structural Capacity		N/A	HS-20	
		*Clear Roadway Width **(12)**		39-6	56′ **(13)**	40′
	Existing Bridges to Remain in Place	*Structural Capacity		N/A	HS-20	
		*Clear Roadway Width **(14)**		39-6	56′	38′
	*Vertical Clearance (Freeway Under) **(15a)**	New and Replaced Overpassing Bridges **(15b)**		39-4	16′-9″ **(15c)**	
		Existing Overpassing Bridges			16′-0″ **(15c)**	
		Overhead Signs/ Pedestrian Bridges		33-5	17′-3″ **(15b)**	
	*Vertical Clearance (Freeway over Railroad)			39-4.06	23′-0″	

* Controlling design criteria (see Section 31-8).

GEOMETRIC DESIGN CRITERIA FOR FREEWAYS
(New Construction/Reconstruction)
(US Customary)

Figure 44-5.A

HARD COPIES UNCONTROLLED

Design Element				Manual Section	Rural One-Way DHV: 2300- 3400 (1) Urban One-Way DHV: 2800 - 4300 (1)	Rural One-Way DHV: Under 2300 (1) Urban One-Way DHV: Under 2800 (1)
Design Controls	Design Forecast Year			31-4.02	20 Years	
	*Design Speed			31-2	Rural: 120 km/h **(2)** Urban: 100 km/h	
	Access Control			35-1	Full Control	
	Level of Service			31-4.04	Rural: B Urban: C **(3)**	
Cross Section Elements	*Traveled Way Width			34-2.01	2 @ 10.8 m	2 @ 7.2 m
	Shoulder Width	Right	Total Width	34-2.02	3.0 m	3.0 m
			Paved		3.0 m **(4)**	3.0 m **(4)**
		Left	Total Width		3.0 m	2.4 m
			Paved		3.0 m **(5)**	1.8 m
	Auxiliary Lanes	Lane Width		37-2.05	3.6 m	
		Shoulder Width			Right: 3.0 m Left: 2.4 m (Minimum)	
	Cross Slope	*Travel Lane		34-2.01	1.5% for lanes adjacent to crown **(6)**	
		Shoulder		34-2.02	4%	
	Median Width	Depressed		34-3	Minimum: 18 m	Minimum: 17 m
		Flush (Concrete Barrier)			7.0 m **(7)**	6.0 m **(7)**
	Clear Zone			38-3	**(8)**	
Roadway Slopes	Side Slopes	Cut Section	Front Slope	34-4.03	1V:6H	
			Ditch Bottom Width		1.2 m **(9)**	
			Back Slope		1V:3H **(10)**	
		Rock Cut		34-4.05	—	
		Fill Section		34-4.02	1V:6H to Clear Zone; 1V:3H max. to Toe of Slope **(11)**	
	Median Slopes			34-3	1V:6H	
Bridges	New and Reconstructed Bridges	*Structural Capacity		N/A	MS-18	
		*Clear Roadway Width **(12)**		39-6	16.8 m **(13)**	12.0 m
	Existing Bridges to Remain in Place	*Structural Capacity		N/A	MS-18	
		*Clear Roadway Width **(14)**		39-6	16.8 m	11.4 m
	*Vertical Clearance (Freeway Under) **(15a)**	New and Replaced Overpassing Bridges **(15b)**		39-4	5.1 m **(15c)**	
		Existing Overpassing Bridges			4.9 m **(15c)**	
		Overhead Signs/ Pedestrian Bridges		33-5	5.25 m **(15b)**	
	*Vertical Clearance (Freeway over Railroad)			39-4.06	7.0 m	

* Controlling design criteria (see Section 31-8).

GEOMETRIC DESIGN CRITERIA FOR FREEWAYS
(New Construction/Reconstruction)
(Metric)

Figure 44-5.A

HARD COPIES UNCONTROLLED

(1) Traffic Volumes. The design hourly volumes (DHV) are calculated assuming base conditions (except for 16% heavy vehicles) and a PHF = 1.0. Adjust these values using local factors.

(2) Design Speed. In rolling terrain, a minimum design speed of 60 mph (100 km/h) may be considered with study and justification.

(3) Level of Service. In major urban areas, a level of service D may be considered with study and justification.

(4) Shoulder Width (Right). Where the directional distribution of trucks exceeds 250 DDHV, consider providing a 12 ft (3.6 m) paved shoulder.

(5) Shoulder Width (Left). Where there are three or more lanes in one direction and the directional distribution of trucks exceeds 250 DDHV, consider providing a 12 ft (3.6 m) paved shoulder.

(6) Travel Lane Cross Slope. For each additional lane away from the crown lanes, increase the cross slope by 1/16″/ft (0.5%) per additional lane up to a maximum of 5/16″/ft (2.5%).

(7) Flush Median Width. Consider providing wider medians where required for snow storage.

(8) Clear Zone. The clear zone will vary according to design speed, traffic volumes, side slopes, and horizontal curvature.

(9) Ditch Bottom Width. Provide a wider outside ditch bottom where detention storage of storm water is a consideration.

(10) Back Slope. Where the height of cut exceeds 10 ft (3 m), consider using a 1V:2H back slope beyond the clear zone. Also, for heights greater than 30 ft (9 m), consider the use of benching.

(11) Fill Slope. For fill heights greater than 30 ft (9 m), use a 1V:2H uniform slope with a roadside barrier. Also, for heights greater than 30 ft (9 m), consider the use of benching.

(12) New and Reconstructed Bridge Widths. Clear roadway bridge widths are measured from face to face of parapets or rails. Bridge widths are normally defined as the sum of the approach traveled way width and the width of the paved shoulders.

(13) Bridge Width. Where the directional distribution of trucks exceeds 250 DDHV, consider providing 12 ft (3.6 m) right and left shoulders. Total width equals 60 ft (18.0 m).

(14) Existing Bridge Widths to Remain in Place. Clear roadway bridge widths are measured from face to face of parapets or rails. Implies elements allowed to remain in place without a design exception approval when cost effective and when safety record is satisfactory.

(15) Vertical Clearance (freeway under).

a. The clearance must be available over the traveled way and any paved shoulders.
b. Make allowances to maintain 16 ft- 0 in (4.9 m) minimum vertical clearance in anticipation of for future overlays.
c. In urban areas, a 15 ft 0 in (4.5 m) clearance may be used where a single routing interstate with a 16 ft 0 in (4.9 m) clearance is available. See Section 44-6 for maps of the single routing in urban areas of Illinois.

GEOMETRIC DESIGN CRITERIA FOR FREEWAYS
(New Construction/Reconstruction)

Footnotes to Figure 44-5A

HARD COPIES UNCONTROLLED

Design Element				Manual Section	Rural One-Way DHV: 2300 - 3400 (2)	Rural One-Way DHV: Under 2300 (2)
Design Controls	Design Forecast Year			31-4.02	20 Years	
	*Design Speed			31-2	70 mph **(3)**	
	Access Control			35-1	Full Control	
	Level of Service			31-4.04	B	
Cross Section Elements	*Traveled Way Width			34-2.01	2 @ 36′	2 @ 24′ **(4)**
	Shoulder Width	Right	Total Width	34-2.02	10′	10′
			Paved		10′ **(5)**	10′ **(5)**
		Left	Total Width		8′	6′
			Paved		8′ **(6)**	4′
	Auxiliary Lanes	Lane Width		37-2.05	11′	
		Shoulder Width			Right: 10′ Left: 4′ (Minimum)	
	Cross Slope	*Travel Lane		34-2.01	3/16″/ft for lanes adjacent to crown **(7)**	
		Shoulder		34-2.02	1/2″/ft to 3/4″/ft	
	Median Width	Depressed		34-3	Minimum: 54′ **(8)**	Minimum: 50′ **(8)**
		Flush (Concrete Barrier)			22′ **(9)**	18′-6″ **(9)**
	Clear Zone			38-3	**(10)**	
Roadway Slopes	Side Slopes	Cut Section	Front Slope	34-4.03	1V:4H	
			Ditch Bottom Width		2.0′ **(11)**	
			Back Slope		1V:3H **(12)**	
		Rock Cut		34-4.05	—	
		Fill Section		34-4.02	1V:4H to Clear Zone; 1V:3H max. to Toe of Slope **(13)**	
	Median Slopes			34-3	1V:4H	
Bridges	Existing Bridges to Remain in Place	*Structural Capacity		N/A	HS-20	
		*Clear Roadway Width **(14)**		39-6	54′	38′
	*Vertical Clearance (Freeway Under) **(15a)**	Existing Overpassing Bridges		39-4	16′-0″ **(15c)**	
		Overhead Signs/ Pedestrian Bridges		33-5	17′-00″ **(15b)**	
	*Vertical Clearance (Freeway over Railroad)			39-4.06	21′-6″	

* Controlling design criteria (see Section 31-8).

GEOMETRIC DESIGN CRITERIA FOR EXISTING CROSS-SECTION ELEMENTS TO REMAIN IN PLACE ON RURAL FREEWAYS(1)
(Reconstruction)
(US Customary)

Figure 44-5.B

HARD COPIES UNCONTROLLED

Design Element				Manual Section	Rural One-Way DHV: 2300 - 3400 (2)	Rural One-Way DHV: Under 2300 (2)
Design Controls	Design Forecast Year			31-4.02	20 Years	
	* Design Speed			31-2	110 km/h **(3)**	
	Access Control			35-1	Full Control	
	Level of Service			31-4.04	B	
Cross Section Elements	* Traveled Way Width			34-2.01	2 @ 10.8 m	2 @ 7.2 m **(4)**
	Shoulder Width	Right	Total Width	34-2.02	3.0 m	3.0 m
			Paved		3.0 m **(5)**	3.0 m **(5)**
		Left	Total Width		2.4 m	1.8 m
			Paved		2.4 m **(6)**	1.2 m
	Auxiliary Lanes	Lane Width		37-2.05	3.3 m	
		Shoulder Width			Right: 3.0 m Left: 1.2 m (Minimum)	
	Cross Slope	*Travel Lane		34-2.01	1.5% for lanes adjacent to crown **(7)**	
		Shoulder		34-2.02	4% to 6%	
	Median Width	Depressed		34-3	Minimum: 16.2 m **(8)**	Minimum: 15 m **(8)**
		Flush (Concrete Barrier)			6.7 m **(9)**	5.5 m **(9)**
	Clear Zone			38-3	**(10)**	
Roadway Slopes	Side Slopes	Cut Section	Front Slope	34-4.03	1V:4H	
			Ditch Bottom Width		600 mm **(11)**	
			Back Slope		1V:3H **(12)**	
		Rock Cut		34-4.05	—	
		Fill Section		34-4.02	1V:4H to Clear Zone; 1V:3H max. to Toe of Slope **(13)**	
	Median Slopes			34-3	1V:4H	
Bridges	Existing Bridges to Remain in Place	*Structural Capacity		N/A	MS-18	
		*Clear Roadway Width **(14)**		39-6	16.2 m	11.4 m
	* Vertical Clearance (Freeway Under) **(15a)**	Existing Overpassing Bridges		39-4	4.9 m **(15c)**	
		Overhead Signs/ Pedestrian Bridges		33-5	5.2 m **(15b)**	
	* Vertical Clearance (Freeway over Railroad)			39-4.06	6.6 m	

* Controlling design criteria (see Section 31-8).

GEOMETRIC DESIGN CRITERIA FOR EXISTING CROSS-SECTION ELEMENTS TO REMAIN IN PLACE ON RURAL FREEWAYS[1]
(Reconstruction)
(Metric)

Figure 44-5.B

HARD COPIES UNCONTROLLED

(1) Design Criteria. The minimum cross-section elements in this figure are allowed to remain in place for reconstruction of an existing freeway provided it is cost effective and the safety record is satisfactory.

(2) Traffic Volumes. The design hourly volumes (DHV) are calculated assuming base conditions (except for 16% heavy vehicles) and a PHF = 1.0. Adjust these values using local factors.

(3) Design Speed. Existing alignment elements may be allowed to remain in place, provided the comfortable operating speed for level and rolling terrain is a minimum of 65 mph (105 km/h) and 60 mph (100 km/h) respectively.

(4) Traveled Way Width. In existing 22′ (6.7 m) traveled way width may be allowed to remain with concurrence of a design exception.

(5) Shoulder Width (Right). Where the directional distribution of trucks exceeds 250 DDHV, consider providing a 12 ft (3.6 m) paved shoulder.

(6) Shoulder Width (Left). Where there are three or more lanes in one direction and the directional distribution of trucks exceeds 250 DDHV, consider providing a 12 ft (3.6 m) paved shoulder.

(7) Travel Lane Cross Slope. For each additional lane away from the crown lanes, increase the cross slope by 1/16″/ft (0.5%) per additional lane up to a maximum of 5/16″/ft (2.5%).

(8) Depressed Median Width. Median width based on paved shoulder width 1V:6H median slope, and 2 ft (600 mm) ditch bottom width.

(9) Flush Median Width. Only use flush medians with concrete barrier where right-of-way or topography restricts the use of a depressed median. Consider providing wider medians where required for snow storage.

(10) Clear Zone. The clear zone will vary according to design speed, traffic volumes, side slopes, and horizontal curvature.

(11) Ditch Bottom Width. Provide a wider outside ditch bottom where detention storage of storm water is a consideration.

(12) Back Slope. Where the height of cut exceeds 10 ft (3 m), consider using a 1V:2H back slope beyond the clear zone. Also, for heights greater than 30 ft (9 m), consider the use of benching.

(13) Fill Slope. For fill heights greater than 30 ft (9 m), use a 1V:2H uniform slope with a roadside barrier. Also, for heights greater than 30 ft (9 m), consider the use of benching.

(14) Existing Bridge Widths to Remain in Place. Clear roadway bridge widths are measured from face to face of parapets or rails. Implies elements allowed to remain in place without a design exception approval when cost effective and when safety record is satisfactory.

(15) Vertical Clearance (Freeway Under).

a. The clearance must be available over the traveled way and any paved shoulders.
b. Make allowances to maintain 16 ft- 0 in (4.9 m) minimum vertical clearance in anticipation of future overlays.
c. In urban areas, a 15 ft 0 in (4.5 m) clearance may be used where a single routing interstate with a 16 ft 0 in (4.9 m) clearance is available. See Section 44-6 for maps of the single routing in urban areas of Illinois.

GEOMETRIC DESIGN CRITERIA FOR EXISTING CROSS-SECTION ELEMENTS TO REMAIN-IN-PLACE ON RURAL FREEWAYS (Reconstruction) Footnotes to Figure 44-5.B

HARD COPIES UNCONTROLLED

Design Element				Manual Section	Urban One-Way DHV: 2800 - 4300 (2)	Urban One-Way DHV: Under 2800 (2)
Design Controls	Design Forecast Year			31-4.02	20 Years	
	*Design Speed			31-2	60 mph **(3)**	
	Access Control			35-1	Full Control	
	Level of Service			31-4.04	C **(4)**	
Cross Section Elements	*Traveled Way Width			34-2.01	2 @ 36′	2 @ 24′ **(5)**
	Shoulder Width	Right	Total Width	34-2.02	10′	10′
			Paved		10′ **(6)**	10′ **(6)**
		Left	Total Width		8′	6′
			Paved		8′ **(7)**	4′
	Auxiliary Lanes	Lane Width		37-2.05	11′	
		Shoulder Width			Right: 6′ Left: 4′ (Minimum)	
	Cross Slope	*Travel Lane		34-2.01	3/16″/ft for lanes adjacent to crown **(8)**	
		Shoulder		34-2.02	1/2″/ft to 3/4″/ft	
	Median Width	Depressed		34-3	Minimum: 42′ **(9)**	Minimum: 40′ **(9)**
		Flush (Concrete Barrier)			16′ **(10)**	18′-6″ **(10)**
	Clear Zone			38-3	**(11)**	
Roadway Slopes	Side Slopes	Cut Section **(12)**	Front Slope	34-4.03	1V:4H	
			Ditch Bottom Width		2.0′	
			Back Slope		1V:3H **(13)**	
		Rock Cut		34-4.05	—	
		Fill Section		34-4.02	1V:4H to Clear Zone; 1V:3H max. to Toe of Slope **(14)**	
	Median Slopes			34-3	1V:4H	
Bridges	Existing Bridges to Remain in Place	*Structural Capacity		N/A	HS-20	
		*Clear Roadway Width **(15)**		39-6	54′	38′
	*Vertical Clearance (Freeway Under) **(16a)**	Existing Overpassing Bridges		39-5	16′-0″ **(16c)**	
		Overhead Signs/ Pedestrian Bridges		33-5	17′-00″ **(16b)**	
	*Vertical Clearance (Freeway over Railroad)			39-4.06	21′-6″	

* Controlling design criteria (see Section 31-8)

GEOMETRIC DESIGN CRITERIA FOR EXISTING CROSS-SECTION ELEMENTS TO REMAIN IN PLACE ON URBAN FREEWAYS[1]
(Reconstruction)
(US Customary)

Figure 44-5.C

HARD COPIES UNCONTROLLED

Design Element				Manual Section	Urban One-Way DHV: 2800 - 4300 (2)	Urban One-Way DHV: Under 2800 (2)
Design Controls	Design Forecast Year			31-4.02	20 Years	
	*Design Speed			31-2	100 km/h **(3)**	
	Access Control			35-1	Full Control	
	Level of Service			31-4.04	C **(4)**	
Cross Section Elements	*Traveled Way Width			34-2.01	2 @ 10.8 m	2 @ 7.2 m **(5)**
	Shoulder Width	Right	Total Width	34-2.02	3.0 m	3.0 m
			Paved		3.0 m **(6)**	3.0 m **(6)**
		Left	Total Width		2.4 m	1.8 m
			Paved		2.4 m **(7)**	1.2 m
	Auxiliary Lanes	Lane Width		37-2.05	3.3 m	
		Shoulder Width			Right: 1.8 m Left: 1.2 m (Minimum)	
	Cross Slope	*Travel Lane		34-2.01	1.5% for lanes adjacent to crown **(8)**	
		Shoulder		34-2.02	4% to 6%	
	Median Width	Depressed		34-3	Minimum: 12.8 m **(9)**	Minimum: 12.0 m **(9)**
		Flush (Concrete Barrier)			4.8 m **(10)**	5.5 m **(10)**
	Clear Zone			38-3	**(11)**	
Roadway Slopes	Side Slopes	Cut Section **(12)**	Front Slope	34-4.03	1V:4H	
			Ditch Bottom Width		600 mm	
			Back Slope		1V:3H **(13)**	
		Rock Cut		34-4.05	—	
		Fill Section		34-4.02	1V:4H to Clear Zone; 1V:3H max. to Toe of Slope **(14)**	
	Median Slopes			34-3	1V:4H	
Bridges	Existing Bridges to Remain in Place	*Structural Capacity		N/A	MS-18	
		*Clear Roadway Width **(15)**		39-6	16.2 m	11.4 m
	*Vertical Clearance (Freeway Under) **(16a)**	Existing Overpassing Bridges		39-5	4.9 m **(16c)**	
		Overhead Signs/ Pedestrian Bridges		33-5	5.2 m **(16b)**	
	*Vertical Clearance (Freeway over Railroad)			39-4.06	6.6 m	

* Controlling design criteria (see Section 31-8)

GEOMETRIC DESIGN CRITERIA FOR EXISTING CROSS-SECTION ELEMENTS TO REMAIN IN PLACE ON URBAN FREEWAYS[1]
(Reconstruction)
(Metric)

Figure 44-5.C

HARD COPIES UNCONTROLLED

(1) Design Criteria. The minimum cross-section elements in this figure are allowed to remain in place for reconstruction of an existing freeway provided it is cost effective and the safety record is satisfactory.

(2) Traffic Volumes. The design hourly volumes (DHV) are calculated assuming base conditions (except for 16% heavy vehicles) and a PHF = 1.0. Adjust these values using local factors.

(3) Design Speed. With restricted conditions, a minimum design speed of 55 mph (90 km/h) may be considered to remain-in-place with study and justification. Also, consider the existing posted speed limits.

(4) Level of Service. In major urban areas, a level of service D may be considered on a reconstruction project with study and justification.

(5) Traveled Way Width. In existing 22 ft (6.7 m) traveled way width may be allowed to remain with concurrence of a design exception.

(6) Shoulder Width (Right). Where the directional distribution of trucks exceeds 250 DDHV, consider providing a 12 ft (3.6 m) paved shoulder.

(7) Shoulder Width (Left). Where there are three or more lanes in one direction and the directional distribution of trucks exceeds 250 DDHV, consider providing a 12 ft (3.6 m) paved shoulder.

(8) Travel Lane Cross Slope. For each additional lane away from the crown lanes, increase the cross slope by 1/16″/ft (0.5%) per additional lane up to a maximum of 5/16″/ft (2.5%).

(9) Depressed Median Width. Median width based on 1V:4H median slope, and 2 ft (600 mm) ditch bottom width (3 – Lanes/Direction) or 4ft. (1.2 m) ditch bottom width (2-Lanes/Direction).

(10) Flush Median Width. Only use flush medians with concrete barrier where right-of-way or topography restricts the use of a depressed median. Consider providing wider medians where required for snow storage.

(11) Clear Zone. The clear zone will vary according to design speed, traffic volumes, side slopes, and horizontal curvature.

(12) Cut Section. In restricted right-of-way, the typical design will have mountable curb and gutter behind the shoulder and an enclosed drainage system.

(13) Back Slope. Where the height of cut exceeds 10 ft (3 m), consider using a 1V:2H back slope beyond the clear zone. Also, for heights greater than 30 ft (9 m), consider the use of benching.

(14) Fill Slope. For fill heights greater than 30 ft (9 m), use a 1V:2H uniform slope with a roadside barrier. Also, for heights greater than 30 ft (9 m), consider the use of benching.

(15) Existing Bridge Widths to Remain in Place. Clear roadway bridge widths are measured from face to face of parapets or rails. Implies elements allowed to remain in place without a design exception approval when cost effective and when safety record is satisfactory.

(16) Vertical Clearance (Freeway Under).

a. The clearance must be available over the traveled way and any paved shoulders.
b. A 15 ft 0 in (4.5 m) clearance may be used where a single routing interstate with a 16 ft 0 in (4.9 m) clearance is available.
c. In urban areas, a 15 ft 0 in (4.5 m) clearance may be used where a single routing interstate with a 16 ft 0 in (4.9 m) clearance is available. See Section 44-6 for maps of the single routing in urban areas of Illinois.

GEOMETRIC DESIGN CRITERIA FOR EXISTING CROSS-SECTION ELEMENTS TO REMAIN-IN-PLACE ON URBAN FREEWAYS (Reconstruction) Footnotes to Figure 44-5.C

HARD COPIES UNCONTROLLED

Design Element		Manual Section	Design Speed		
			60 mph	70 mph	75 mph
*Stopping Sight Distance **(1)**		31-3.01	570′	730′	820
Decision Sight Distance **(2)**		31-3.02	Rural: 990′ Urban: 1280′	1105′	1180′
*Minimum Radii	e_{max} = 6% (New)	32-2.03	Desirable: > 3000′ Minimum: 1330′	Desirable: > 3000′ Minimum: 2040′	Desirable: > 3000′ Minimum: 2500′
	e_{max} = 8% (Reconstruction)		Minimum: 1200′ **(3)**	Minimum: 1810′ **(3)**	Minimum: 2210′ **(3)**
*Superelevation Rates		32-3	New: e_{max} = 6% Reconstruction: e_{max} = 8% **(3)**		
*Horizontal Sight Distance		32-4	**(4)**		
*Vertical Curvature (K-values)	Crest	33-4	151	247	312
	Sag		136	181	206
*Maximum Grade **(5)**	Level	33-2.02	New: 3% Remain in Place: 4%		
	Rolling		New: 4% Remain in Place: 5%		
Minimum Grade	Rural	33-2.03	Desirable: 0.5% Minimum: 0.0% (with Special Ditching)		
	Urban		Desirable: 0.5% Minimum: 0.3% (with Curb and Gutter) **(6)**		

* Controlling design criteria (see Section 31-8).

(1) Stopping Sight Distance. Table values are for passenger cars on level grade.

(2) Decision Sight Distance. Table values are for the avoidance maneuver (speed/path/direction change).

(3) Minimum Radii/Superelevation Rates. Values are only allowed for remain-in-place elements.

(4) Horizontal Sight Distance. For a given design speed, the necessary middle ordinate will be determined by the radius of curve and the required sight distance.

(5) Maximum Grade.

a. Rural. With wide medians where two roadways are on independent alignments, downgrades may be 1% steeper.
b. Urban. Grades 1% steeper may be used for restricted conditions.

(6) Minimum Grades. Where curb and gutter is required due to restricted right-of-way, use M-4.24 curb and gutter and locate it no closer than the outer edge of shoulder.

ALIGNMENT CRITERIA FOR FREEWAYS
(US Customary)

Figure 44-5.D

HARD COPIES UNCONTROLLED

Design Element		Manual Section	Design Speed		
			100 km/h	110 km/h	120 km/h
*Stopping Sight Distance **(1)**		31-3.01	185 m	216 m	250 m
Decision Sight Distance **(2)**		31-3.02	Rural: 315 m Urban: 400 m	330 m	360 m
*Minimum Radii	e_{max} = 6% (New)	32-2.03	Desirable: > 1000 m Minimum: 437 m	Desirable: > 1000 m Minimum: 560 m	Desirable: > 1000 m Minimum: 756 m
	e_{max} = 8% (Reconstruction)		394 m **(3)**	501 m **(3)**	667 m **(3)**
*Superelevation Rates		32-3	New: e_{max} = 6% Reconstruction: e_{max} = 8% **(3)**		
*Horizontal Sight Distance		32-4	**(4)**		
*Vertical Curvature (K-values)	Crest	33-4	52	74	95
	Sag		45	55	63
*Maximum Grade **(5)**	Level	33-2.02	New: 3% Remain in Place: 4%		
	Rolling		New: 4% Remain in Place: 5%		
Minimum Grade	Rural	33-2.03	Desirable: 0.5% Minimum: 0.0% (with Special Ditching)		
	Urban		Desirable: 0.5% Minimum: 0.3% (with Curb and Gutter) **(6)**		

* Controlling design criteria (see Section 31-8 and Form BDE 31-8).

(1) Stopping Sight Distance. Table values are for passenger cars on level grade.

(2) Decision Sight Distance. Table values are for the avoidance maneuver (speed/path/direction change).

(3) Minimum Radii/Superelevation Rates. Values are only allowed for remain-in-place elements.

(4) Horizontal Sight Distance. For a given design speed, the necessary middle ordinate will be determined by the radius of curve and the required sight distance.

(5) Maximum Grade.

a. Rural. With wide medians where two roadways are on independent alignments, downgrades may be 1% steeper.
b. Urban. Grades 1% steeper may be used for restricted conditions.

(6) Minimum Grades. Where curb and gutter are required due to restricted right-of-way, use M-10.60 curb and gutter and locate it no closer than the outer edge of shoulder.

ALIGNMENT CRITERIA FOR FREEWAYS
(Metric)

Figure 44-5.D

HARD COPIES UNCONTROLLED

44-6 SINGLE INTERSTATE ROUTING FOR SELECT URBAN AREAS

The integrity of the Interstate System for national defense purposes shall be maintained to meet AASHTO policy as stated in AASHTO's "A Policy on Design Standards - Interstate System." IDOT requires vertical clearances on new construction/reconstruction Interstate sections in rural areas and single routing through or around urban areas to be no less than 16 ft 09 in (5.1 m). The clear height of structures over other urban interstate routes shall not be less than 15 ft 00 in (4.5 m). This clearance is required over the full roadway width (travel lanes and usable shoulders), including ramps and collector-distributor roadways within Interstate-to-Interstate interchanges.

The FHWA allows a minimum 16 ft 00 in (4.9 m) in rural areas and along the single routing in urban areas. The minimum vertical clearance in other urban areas shall be no less than 14 ft 00 in (4.3 m). The extra clearance IDOT requires allows for future overlays. The urban areas in Illinois where single routing occurs and the figures showing maps of the routing are:

- the Chicago urban area[1]; Figure 44-6.A
- Metro-east St. Louis urban area; Figure 44-6.B
- Peoria urban area, Figure 44-6.C
- Quad Cities; and Figure 44-6.D

The Federal Highway Administration (FHWA) and the Surface Deployment and Distribution Command Transportation Engineering Agency (SDDCTEA), previously the Military Traffic Command Transportation Engineering Agency, have cooperated to meet the demands of the military traffic on the Interstate System, particularly in the area of vertical clearance. The coordination and reporting with the SDDCTEA on all design exceptions for vertical clearance is to ensure the Department of Defense is aware of the locations of nonstandard clearances on the Interstate System in the event a defense emergency arises. The military continues to have a need for the 16-ft (4.9m) clearance. While the size of future equipment that may use the Interstate System is unknown, the SDDCTEA needs to ensure options remain for the routing of military equipment.

1. The map for the Chicago metropolitan area is the most current available. The SDDCTEA have added the section of I-355 between I-80 and I-55 to the single routing since this map was released.

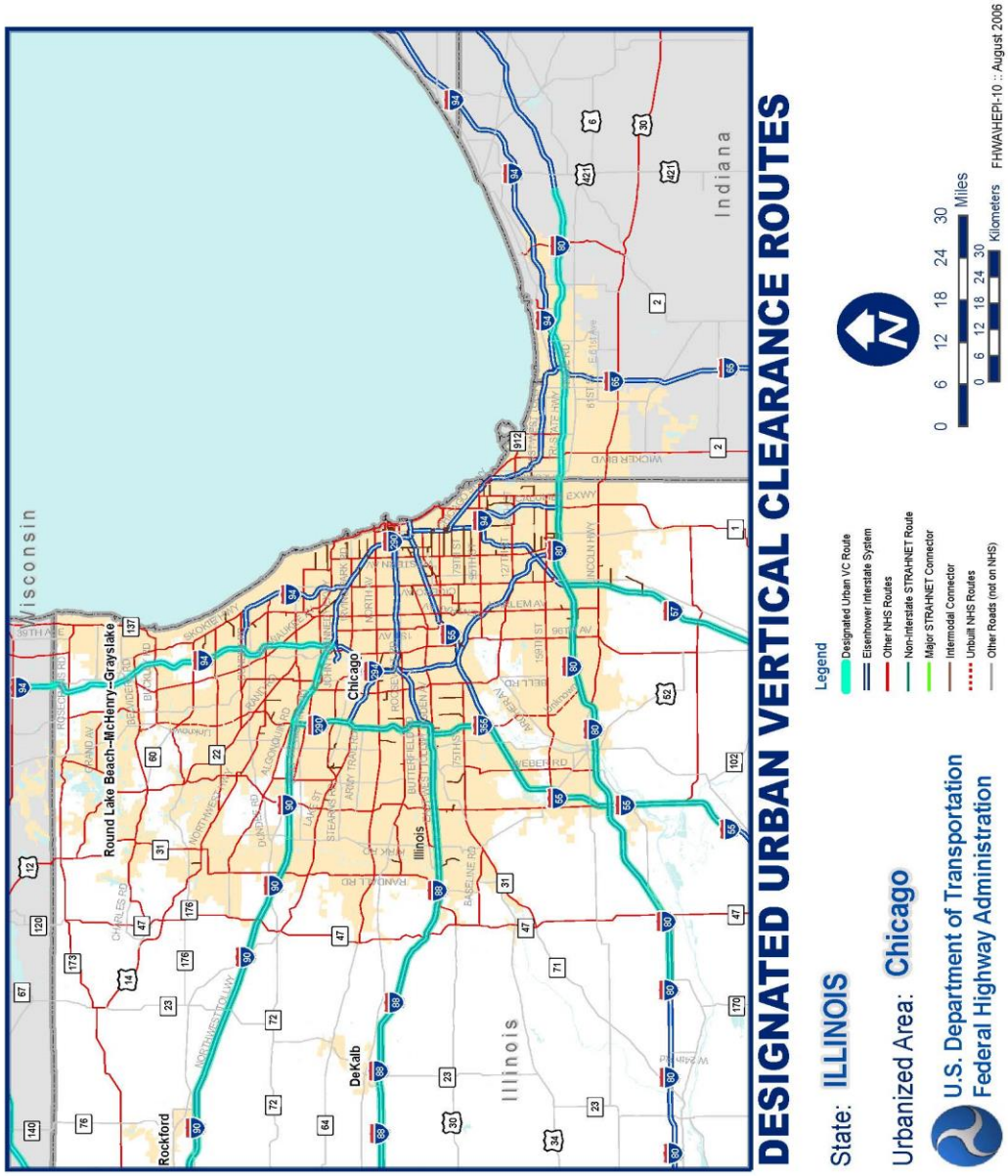

SINGLE INTERSTATE ROUTING FOR THE CHICAGO URBAN AREA

FIGURE 44-6.A

HARD COPIES UNCONTROLLED

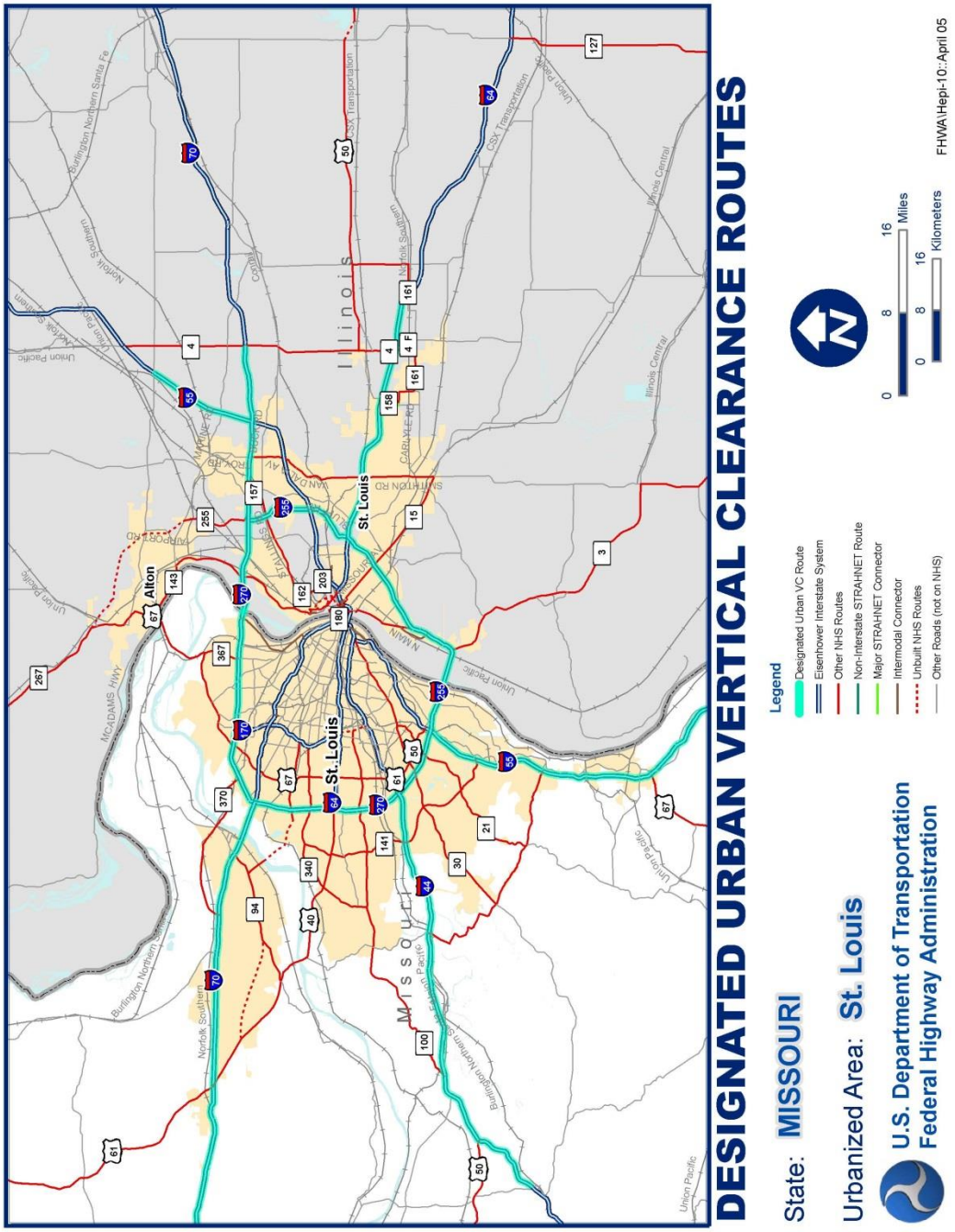

SINGLE INTERSTATE ROUTING FOR THE METRO-EAST URBAN AREA

FIGURE 44-6.B

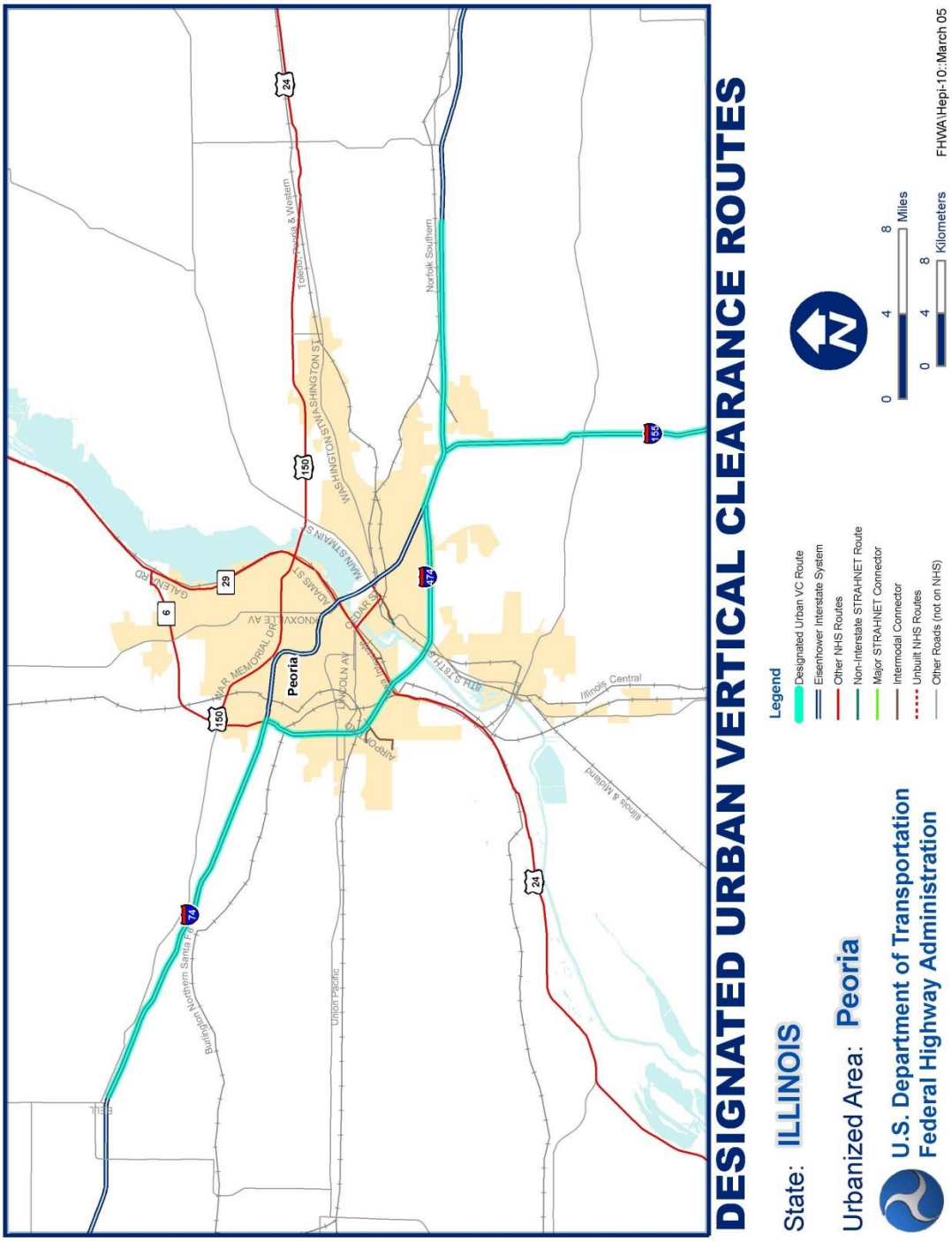

SINGLE INTERSTATE ROUTING FOR THE PEORIA URBAN AREA

FIGURE 44-6.C

HARD COPIES UNCONTROLLED

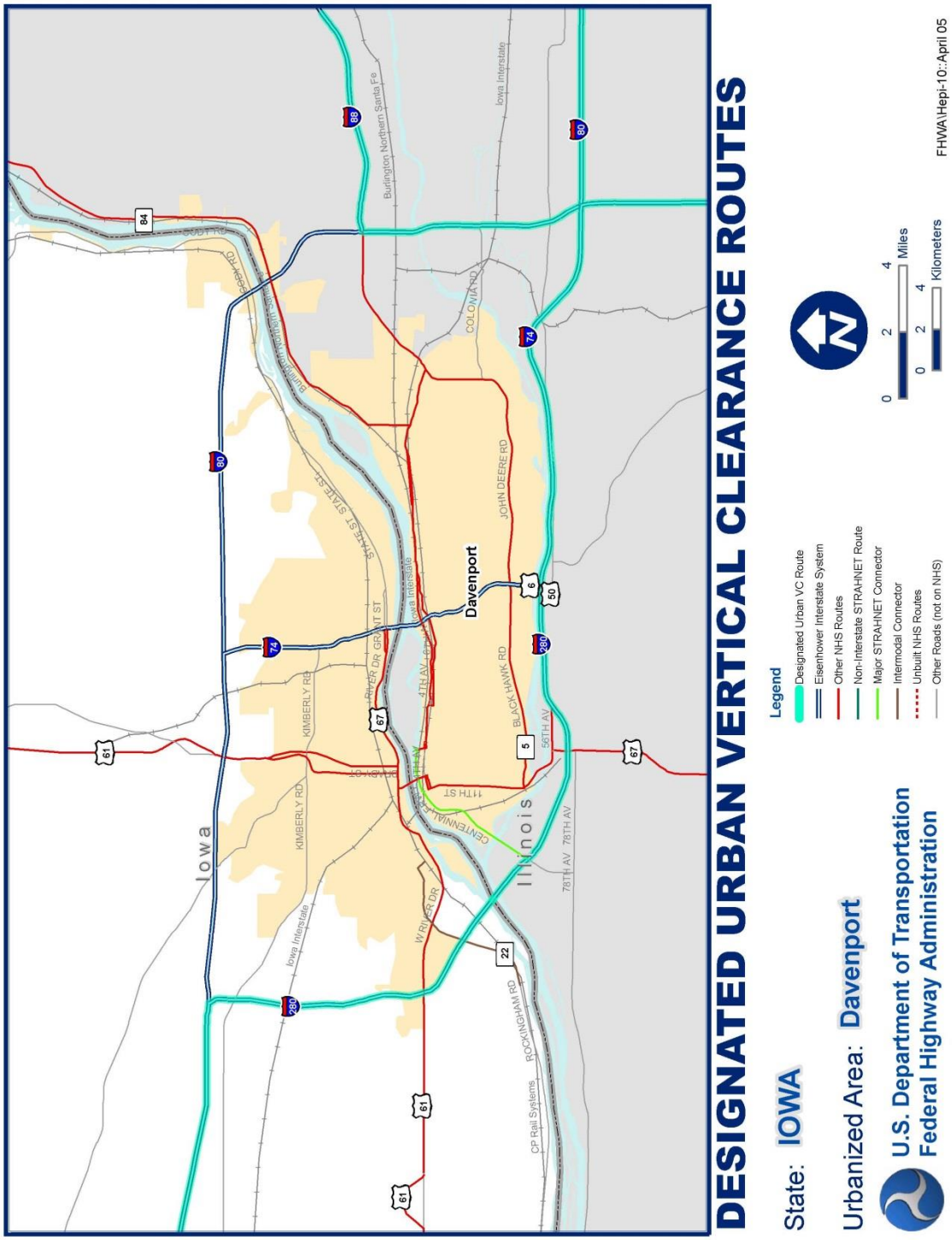

SINGLE INTERSTATE ROUTING FOR THE QUAD CITIES URBAN AREA

FIGURE 44-6.D

HARD COPIES UNCONTROLLED

44-7 REFERENCES

1. *A Policy on Geometric Design of Highways and Streets*, AASHTO, 2011.

2. *A Policy on Design Standards — Interstate System*, AASHTO, 2005.

3. *Manual on Uniform Traffic Control Devices*, FHWA, ATSSA, AASHTO, and ITE, 2009.

4. *Highway Safety Design and Operations Guide*, AASHTO, 1997.

5. NCHRP Synthesis 185, *Preferential Lane Treatments for High-Occupancy Vehicles*, Transportation Research Board, 1993.

6. *Guide for the Design of High-Occupancy Vehicle Facilities*, AASHTO, 2004.

7. *Roadside Design Guide, AASHTO, 2011.*

HARD COPIES UNCONTROLLED

HARD COPIES UNCONTROLLED