Illinois Department of Transportation

Memorandum

To:	ALL BRIDGE DESIGNERS	15.6
From:	D. Carl Puzey	
Subject:	New Elastomeric Bearing Sizes	
Date:	December 2, 2015	

In 2009, the Illinois Center for Transportation sponsored research for elastomeric and fixed bearings. This research evaluated the responses of different types of bearings during laboratory-staged seismic events. The outcomes of this research revealed that there were several problematic behaviors during a seismic event, two of which were prying action of side retainers for Type I elastomeric bearings and unseating of beams from Type II and Type III elastomeric bearings. To reduce the risk of these behaviors, side retainer dimensions and details were revised, and larger Type I bearings were designed according to the current AASHTO LRFD Bridge Design Specifications. The new side retainer details will reduce prying action and the larger Type I elastomeric bearings will reduce the number of occurrences where Type II elastomeric bearings are required, therein reducing the possibility of beam unseating during seismic events.

Also, earlier this year, IDOT introduced new precast prestressed concrete IL beam sections with longer maximum span lengths. The larger reactions of these beam sections exceeded our current elastomeric bearing designs in some cases. The new elastomeric bearing designs will accommodate all IDOT precast prestressed beams.

The introduction of new elastomeric bearing sizes was also seen as a good opportunity to revisit IDOT's bearing design policies and further evaluate the more recent AASHTO provisions for bearing design. As a result, IDOT has elected to adopt the AASHTO provisions specifically for thermal expansion range recommended for Illinois, and recommended friction values between PTFE and stainless steel.

Detailed Summary of Changes

The following summary highlights the changes in the Department's policies and details. The changes are also reflected in the attached figures and on the related base sheets in the IDOT website CADD libraries.

- **New bearing sizes, 18 x 24 and 20 x 24, for Type I, II, and III elastomeric bearings.** See Figures 3.7.4-12 and 3.7.4-13 for new charts and Figures 3.7.4-2, 3, 4, 5, 6, 11, 18, 20, 21, 22, 23 for Bridge Manual updated charts and tables.

- **Revised expansion lengths for all elastomeric bearings.** IDOT's extreme thermal design range has been reduced to more accurately reflect Illinois conditions and to align with the thermal ranges given in Articles 3.12.2 and 14.7.5.3.2 of the AASHTO LRFD Bridge Design Specifications (7th Ed.). These revisions will enable IDOT to reduce the number of Type II bearings used, especially in Seismic Performance Zones 2, 3, and 4. Type I bearings shall be used whenever possible in these seismic zones, even if doing so requires using a bearing with a footprint larger than the smallest footprint required. If a larger footprint bearing allows a Type I bearing to be used versus a Type II bearing, the smallest footprint which allows a Type I bearing to be utilized shall be chosen.

- **Wider and longer side retainers.** Larger side retainers were developed and stainless steel plates were added under the side retainers for Type I bearings to minimize prying action. Laboratory testing revealed the side retainer toe of the current Department details can dig into the concrete bearing seats when engaged by the bearing. See Figures 3.7.4-15, 16, 17, 18, 21 for the Bridge Manual updated charts and tables. Note that for new precast prestressed concrete IL beam bridges with large bottom flanges and small beam spacings, these larger side retainers may encroach upon steps in concrete caps. If this occurs, and the concrete cap cannot be detailed to avoid it, the side retainers may be reduced in width to accommodate the steps but shall not be less than 3.875 in.

- **Revised bearing forces transmitted to substructure.** To be consistent with Article 14.6.3.1 of the AASHTO LRFD Bridge Design Specifications (7th Ed.), the forces acting parallel to the thermal movement applied to the substructure shall be based on 44 pounds per square inch of bearing area for Type I bearings. This intensity was determined using the maximum elastomer shear modulus of 175 psi and limiting design shear deflection to 25 percent of the total elastomer thickness. To be consistent with Article 1083.02(b) of the Standard Specifications, forces acting parallel to thermal movement shall be 0.07 times the dead load reaction for Type II and III bearings.

- **Revised top bearing plate design loads and C values.** To be consistent with AASHTO LRFD Bridge Design Specifications (7th Ed.), the vertical loads applied to the top bearing plate shall be based on Strength I load combination reactions. Also, top bearing plates shall be designed using reduced C values of 0.144 for 36 ksi steel and 0.122 for 50 ksi steel. These changes to the top bearing plate design shall apply to both non-elastomeric and elastomeric top bearing plate designs. See Figures 3.7.1.2-3 and 3.7.4-19 for the Bridge Manual updated charts.

- **Revised Type III bearing bottom plate thickness.** Bottom plate thickness, Tb, for Type III bearings has been revised as a result of adopting the higher static coefficient of friction for slippage of the PTFE surface from 0.04 to 0.07. This increase in static coefficient of friction results in higher lateral force being applied to the shear restrictor pin, thus resulting in a higher bearing stress on the plate and consequently increasing the bottom plate thickness. See Figure 3.7.4-23 for the Bridge Manual updated chart, which now provides different bottom plate thicknesses depending on the grade of steel used (Grade 36 or 50).

- **Reduced Type III bearing load capacity.** As a result of adopting the AASHTO provisions of 14.7.6.3, the dead load plus live load without impact reactions allowed for Type III bearings have been reduced. The maximum allowable compressive stress on the bearing is a function of the shear modulus of the elastomer and the shape factor of the bearing, but not greater than 800 psi. The presence of the shear restrictor pin reduces the shape factor, thus resulting in a maximum allowable stress values lower than 800 psi for Type III bearings. An average shear modulus of 136 psi for elastomer hardness of 55 was adopted for these reaction calculations. See Figures 3.7.4-3 and 3.7.4-20 for the Bridge Manual updated charts and tables.

- **Revised material specifications.** Specifications for the material properties of the shear restrictor pin for Type III bearings have been changed from AISI 4340 to Article 1083.02(d) of the Standard Specifications. See Figure 3.7.4-17 for the Bridge Manual updated chart.

- **Removed existing Bridge Manual Figures 3.7.4-16 and 3.7.4-17.** The semi-integral bearing details were designed to permit bearing removal with the beams and bridge deck in place. However, elastomeric bearings typically have a longer service life than a bridge deck and therefore the added expense of these bearing details is not warranted. The elastomeric bearing and fixed bearing details illustrated in revised based sheets I-2E-1, I-2E-2, and I-2E-3 shall be used for all applicable steel beams and elastomeric bearing details illustrated in revised base sheets PI-2E-1, PI-2E-2, and PI-2E-3 shall be used for all PPC beams.

Implementation

These revisions shall be effective with TS&L's approved after January 1, 2016. Please direct questions to Gary Kowalski of the Policies, Standards and Specifications Unit at (217) 785-2914.

Attachments

GMK/kktABD15.6elastomericbearings-20151202

3.6.1 Expansion Joint Limitations

The type of expansion device to be used on a bridge deck depends upon the contributing expansion length for which the device is provided and the skew angle of the opening. The design temperature range shall be -20° F to 120° F with a normal installation temperature of 50° F. For design purpose, the coefficient of linear expansion shall be 0.0000065/° F for steel and concrete structures.

Figure 2.3.6.1.6-1 sets the limitations for sealed expansion joints, which includes strip seals, finger plate joints with troughs, and modular joints.

R= Reaction in kips (Strength I)
Include impact for top plate only.
C= 0.144 for f_y = 36 ksi
C= 0.122 for f_y = 50 ksi
ℓ = Bottom flange width + 2(weld size) + $\frac{1}{2}$''

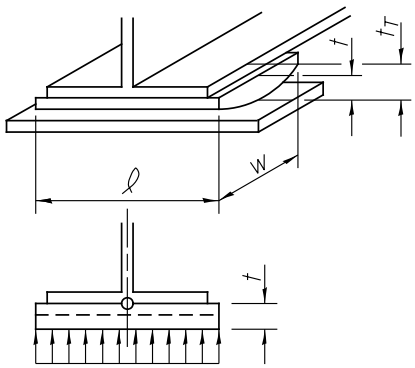

TOP BEARING PLATES

$$t_T = C\sqrt{\frac{R\ell}{w}}$$

*$t = t_T$ - flange thickness
Min. t = 1''

*With bearing stiffeners use 80% t.

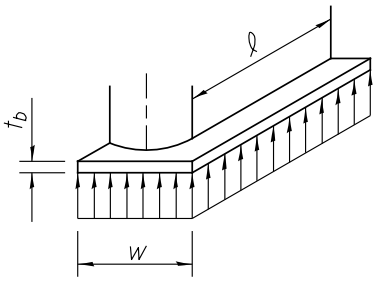

BOTTOM BEARING PLATES

$$w = \frac{R}{f_m\ (\ell + 2t_b)} \geq 9''$$

$$t_b = C\sqrt{\frac{Rw}{(\ell + 2t_b)}}$$

f_m = 0.85 f'c (ksi)
f_m may be increased by a modification factor: $\sqrt{\frac{A_2}{A_1}} \leq 2$

See 5.7.5 of the AASHTO LRFD code.

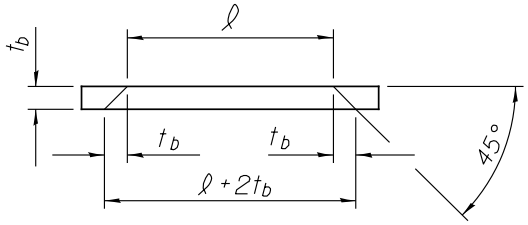

TOP PLATE WELD DESIGN

*(No Bearing Stiffeners)

S_w = Shear per inch of weld (K/in)

$$S_w = \frac{3\ R\ t_F\ t\ \ell}{4(t_F + t)^3\ (\ell + w)}$$

or

$$S_w = \frac{R_{DLE}}{5(2\ell + 2w)}$$

Whichever is larger

R_{DLE} = Unfactored superstructure dead load reaction in kips at the given bearing under consideration (extreme event I).

Final weld size shall be $\frac{5}{16}$'' or greater.

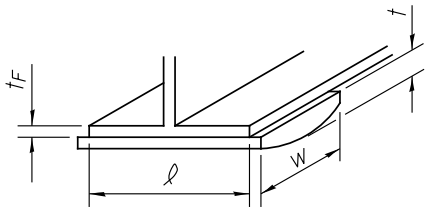

*With bearing stiffeners use $\frac{1}{2}$'' weld.

NON-ELASTOMERIC BEARING PLATE DESIGN

Figure 3.7.1.2-3

3.7.4 Elastomeric Expansion Bearing Assemblies

LRFD and LFD

Elastomeric bearing assemblies are divided into three types according to the expansion lengths that they will accommodate. The details of the types are shown in Figure 3.7.4-1.

The Type I assembly is a conventional laminated pad where all of the movement is taken by distortion of the rubber. This type shall be limited to expansion lengths of 109 ft. or less for the 6 in. wide bearing and 379 ft. or less for the 20 in. wide bearing.

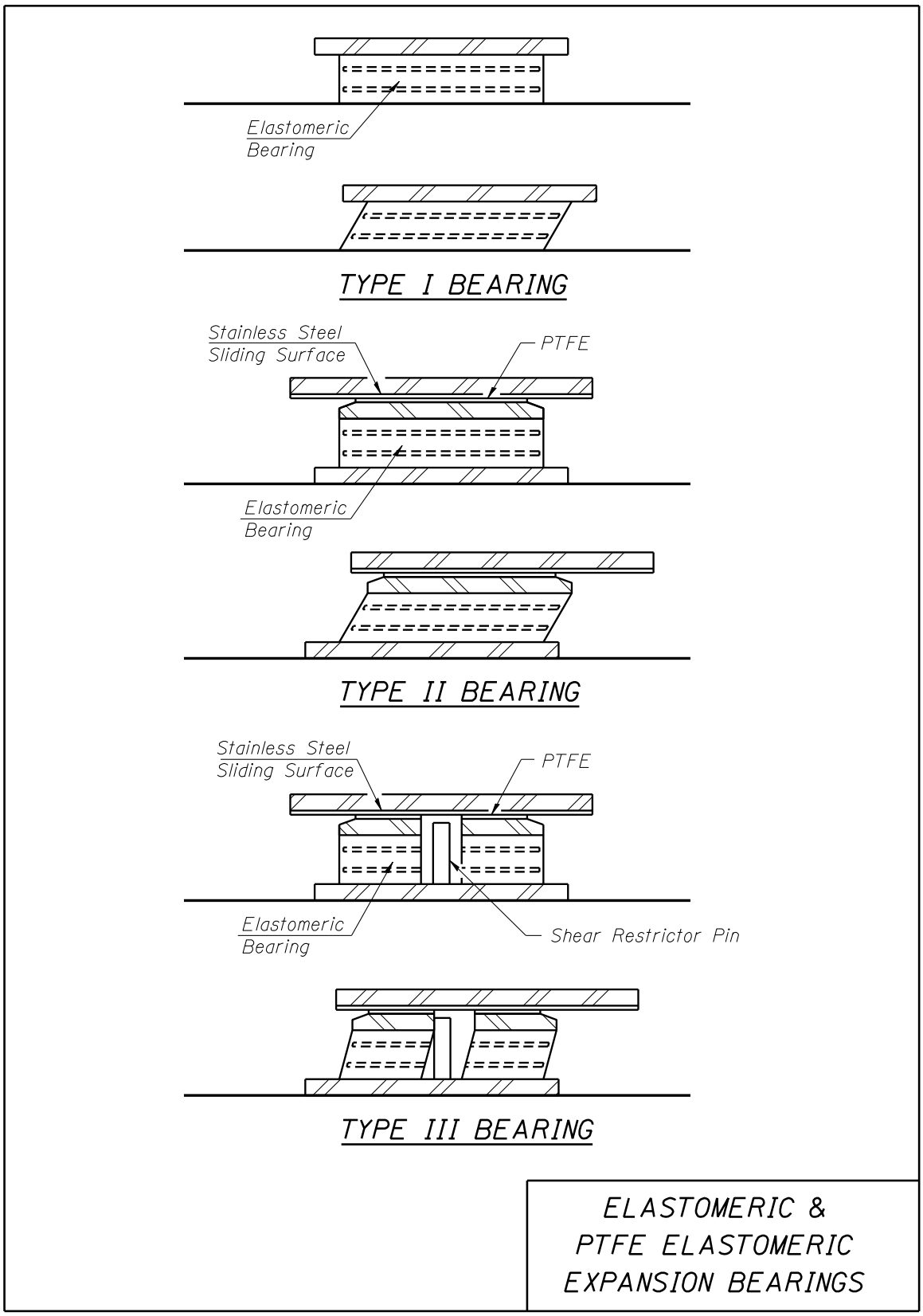
Elastomeric
Bearing
TYPE I BEARING
Stainless Steel
Sliding Surface
PTFE
Elastomeric
Bearing
TYPE II BEARING
Stainless Steel
Sliding Surface
PTFE
Elastomeric
Bearing
Shear Restrictor Pin
TYPE III BEARING
ELASTOMERIC &
PTFE ELASTOMERIC
EXPANSION BEARINGS

Figure 3.7.4-1

The Type II assembly has a teflon sliding surface incorporated to provide additional movement capacity. The movement is accomplished by both deformation of the elastomer and slippage on the teflon surface. The elastomer deforms until the internal shear force equals the friction force required to slip the teflon surface. The expansion length limitations of the Type II assembly shall be 218 ft. for the 6 in. wide bearing and 758 ft. for the 20 in. wide bearing.

The Type III bearing was developed to accommodate expansion lengths which exceed the limitations of the Type II bearing. The Type III is essentially a Type II with a shear restrictor pin added to prevent the rubber from overstressing in shear as movement occurs. The movement in excess of that allowed by the shear restrictor pin is accommodated by slippage on the teflon surface.

There is no limitation on the expansion length for which the Type III may be used as long as sufficient travel capability is provided by the shear restrictor pin and the size of the stainless steel plate. The rubber thickness is based on the deformation allowed by the shear restrictor pin and the rotational requirements for nonparallel load surfaces.

Figures 3.7.4-15, 3.7.4-16 and 3.7.4-17 depict standard details for Type I, Type II, and Type III elastomeric expansion bearings respectively.

The design of elastomeric bearings is governed by four basic parameters. These parameters are as follows:

1. Dead Load Reaction.
2. Dead Load plus Live Load Reaction.
    a. Impact not included.
3. Expansion Length.
    a. Distance from point where bridge superstructure is assumed fixed for thermal expansion to expansion bearing.
4. Percent Slope due to Nonparallel Surfaces.
    a. Dead load rotation.
    b. Camber of prestressed beams.
    c. Profile grade of beam.

The design criteria are subject to certain limitations. These limitations are in terms of both allowable stresses and minimum dimensions. They are as follows:

1. The total effective rubber thickness (ERT) of the elastomer shall be a least 2 times the total movement for the Type I bearing. See Section 3.6.1 for temperature range and linear expansion coefficient.
    a. The total effective rubber thickness is defined as the summation of the individual layers of rubber including the top and bottom layers.
    b. For the Type II bearing, the ERT need only be equal to the total movement, due to the use of the Teflon and stainless steel sliding surfaces.
    c. For the Type III bearing, the ERT is not directly related to the total movement provided that the sliding surfaces remain in full contact as shown in Figure 3.7.4-1.
2. The width of the bearing parallel to the direction of movement shall be at least 3 times the total effective rubber thickness with exception to bearings 10-d, 13-e, 14-e, and 15-e in Figures 3.7.4-21 through 3.7.4-23, where width of the bearing as small as 2.85 times the total ERT is allowed.
3. The stress due to dead load shall be between 200 and 500 psi.*
4. The stress due to dead load plus live load without impact shall be between 200 and 800 psi.*
5. Sufficient rubber thickness or a tapered plate shall be provided to avoid a lift-off condition on the leading edges of the pad.

    **The 200 psi minimum requirement is intended for preventing the horizontal crawling of the bearing when it is not attached to the top surface. This requirement has been applied to the bearing designs detailed in this manual even though these bearings are detailed with positive attachment to the flange of the girder. Compliance with the requirement is desirable but is not mandatory if it results in a special bearing design or special superstructure treatments.*

Design aids have been produced which incorporate the design parameters and limitations. These aids are shown in Figures 3.7.4-2 through 3.7.4-14 and were developed for LRFD, but will also be applicable for LFD. LRFD factored service reactions from load case Service I (Article 3.4.1) shall govern the design. The end shear/reaction amplification for skewed bridges (Article 4.6.2.2.3c) is not applicable for interior and exterior beam bearing designs at continuous piers. The factored resistance of structural steel in bearing assemblies shall be calculated as currently stipulated in this Manual.

The following is a step-by-step procedure for using the design tables:

1. The size of bearing required is determined by entering dead load reaction and the dead load plus live load reaction in the tables in Figure 3.7.4-2 or 3.7.4-3. The limits of the Type III bearings are reduced because of the reduction in area due to the holes for the shear restrictor pins.

2. The type of bearing required is determined from the table in Figure 3.7.4-4. If a Type III is required, the table in Figure 3.7.4-3 shall be checked to see that the limits of the Type III are not exceeded.

3. The thickness of the bearings is determined from Figures 3.7.4-5 through 3.7.4-13. Each bearing type is divided according to plan dimensions and thicknesses. The thicknesses (series) are designated by letters such as a, b, c, etc. which correspond to dimensions given in Figures 3.7.4-21 through 3.7.4-23. For Type I and II bearings, the thickness required for expansion requirements is found in Figures 3.7.4-5 and 3.7.4-6. The thickness required to satisfy slope requirements for Type II and III bearings is given in Figures 3.7.4-7 through 3.7.4-13. For Type I bearings the slope requirements are shown in Figure 3.7.4-21. Both of these thicknesses shall be determined and the maximum used. If a tapered plate is used, the slope becomes zero and series “a” will satisfy slope requirements only. For Type III bearings, the only requirement is to meet the slope requirements. Therefore, only the tables in Figures 3.7.4-7 through 3.7.4-13 are used to determine which series is required. If a tapered plate is used, again the slope becomes zero and a series “a” is required. After the correct series is determined, the detailing dimensions are found in Figures 3.7.4-20 through 3.7.4-23. Additional figures are included to provide detailing aids.

Type I bearings shall be used whenever possible in Seismic Performance Zones 2, 3, and 4, even if doing so requires using a bearing with a footprint larger than the smallest footprint required. If a larger footprint bearing allows Type I bearing to be used versus Type II bearing, the smallest footprint which allows Type I bearing to be utilized shall be chosen.

A force acting in a direction parallel to the movement shall be applied to the substructure at the base of the bearing. This force is due to either the force required to deform the elastomer of the Type I bearing or the friction force required for slippage of the teflon surface on the Types II and III bearings. The magnitude of the force shall be 44 pounds per square inch of bearing area for Type I bearings and 0.07 times the dead load reaction for Types II and III bearings.

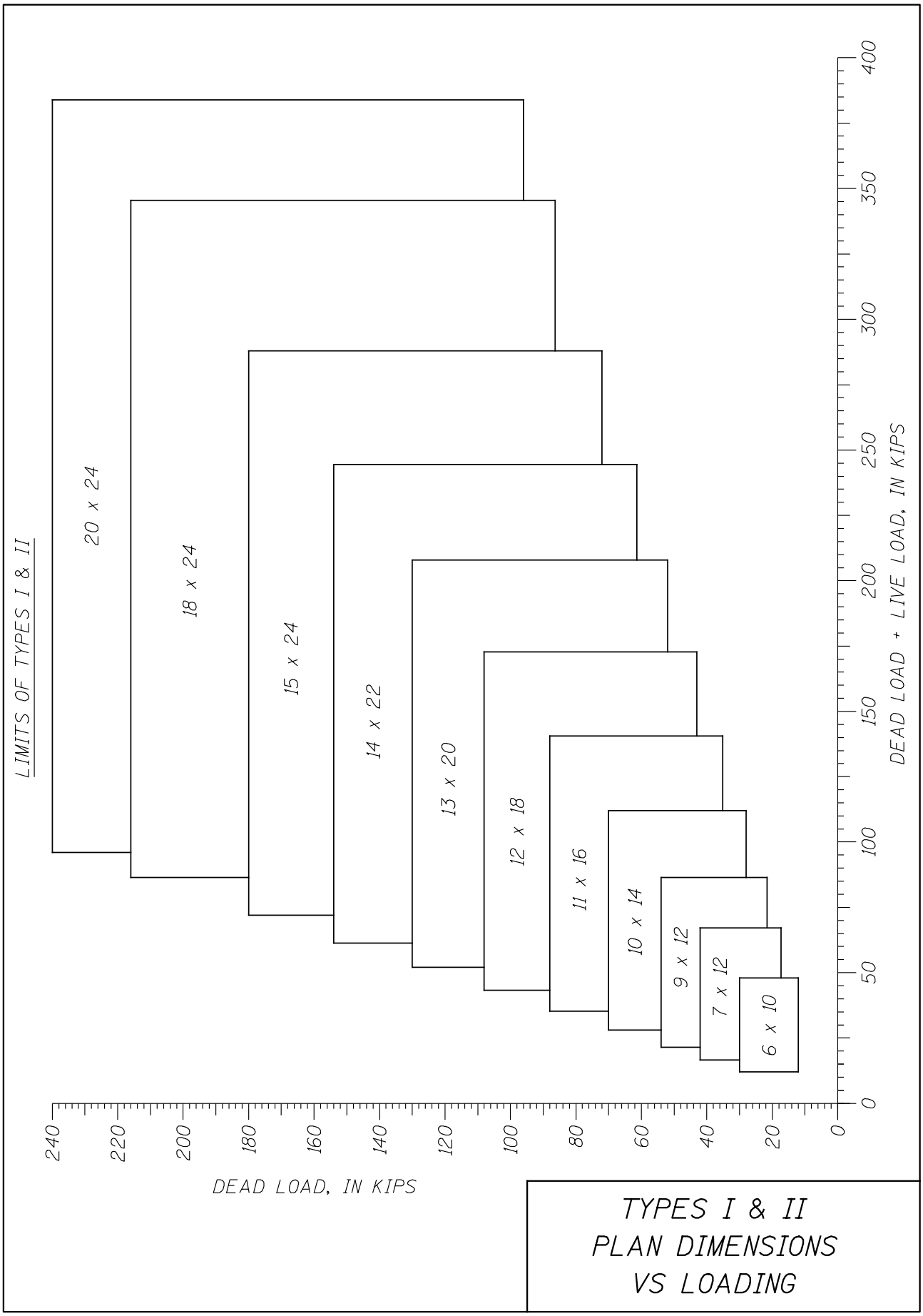
LIMITS OF TYPES I & II
20 x 24
18 x 24
15 x 24
14 x 22
13 x 20
12 x 18
11 x 16
10 x 14
9 x 12
7 x 12
6 x 10
DEAD LOAD, IN KIPS
240
220
200
180
160
140
120
100
80
60
40
20
0
DEAD LOAD + LIVE LOAD, IN KIPS
0
50
100
150
200
250
300
350
400
TYPES I & II
PLAN DIMENSIONS
VS LOADING

Figure 3.7.4-2

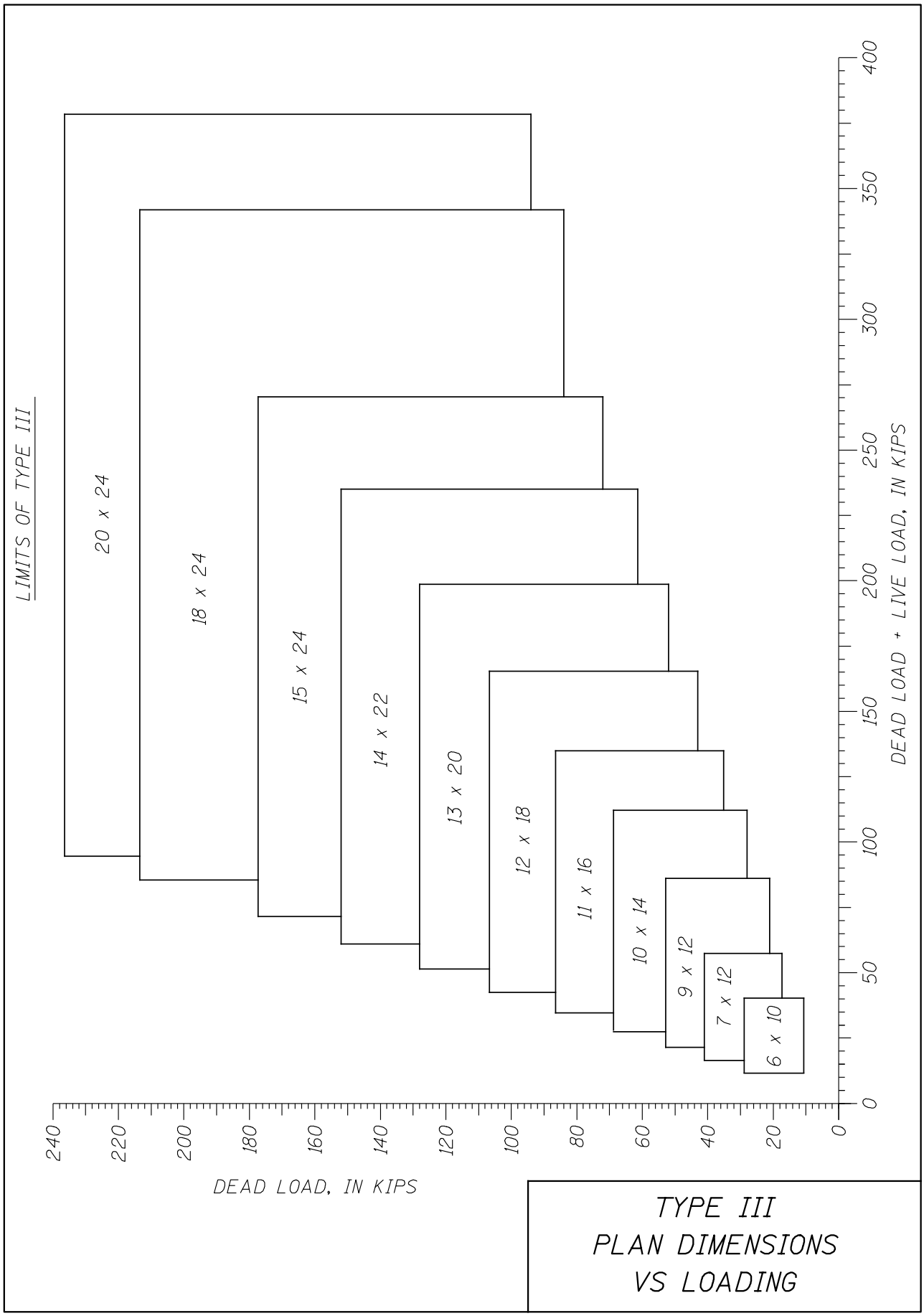
LIMITS OF TYPE III
20 x 24
18 x 24
15 x 24
14 x 22
13 x 20
12 x 18
11 x 16
10 x 14
9 x 12
7 x 12
6 x 10
DEAD LOAD + LIVE LOAD, IN KIPS
0
50
100
150
200
250
300
350
400
DEAD LOAD, IN KIPS
0
20
40
60
80
100
120
140
160
180
200
220
240
TYPE III
PLAN DIMENSIONS
VS LOADING

Figure 3.7.4-3

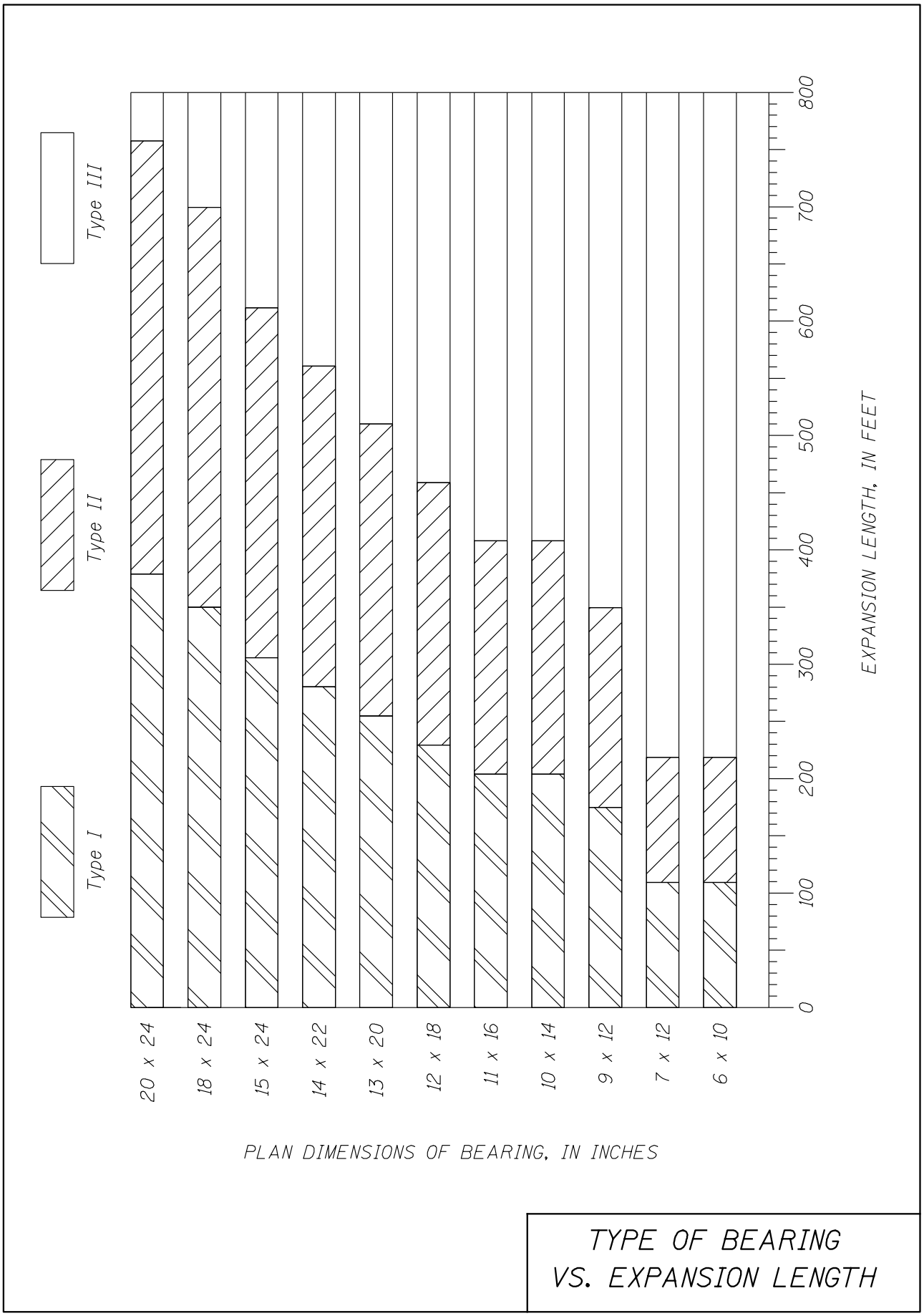
Type I
Type II
Type III
0
100
200
300
400
500
600
700
800
EXPANSION LENGTH, IN FEET
20 x 24
18 x 24
15 x 24
14 x 22
13 x 20
12 x 18
11 x 16
10 x 14
9 x 12
7 x 12
6 x 10
PLAN DIMENSIONS OF BEARING, IN INCHES
TYPE OF BEARING
VS. EXPANSION LENGTH

Figure 3.7.4-4

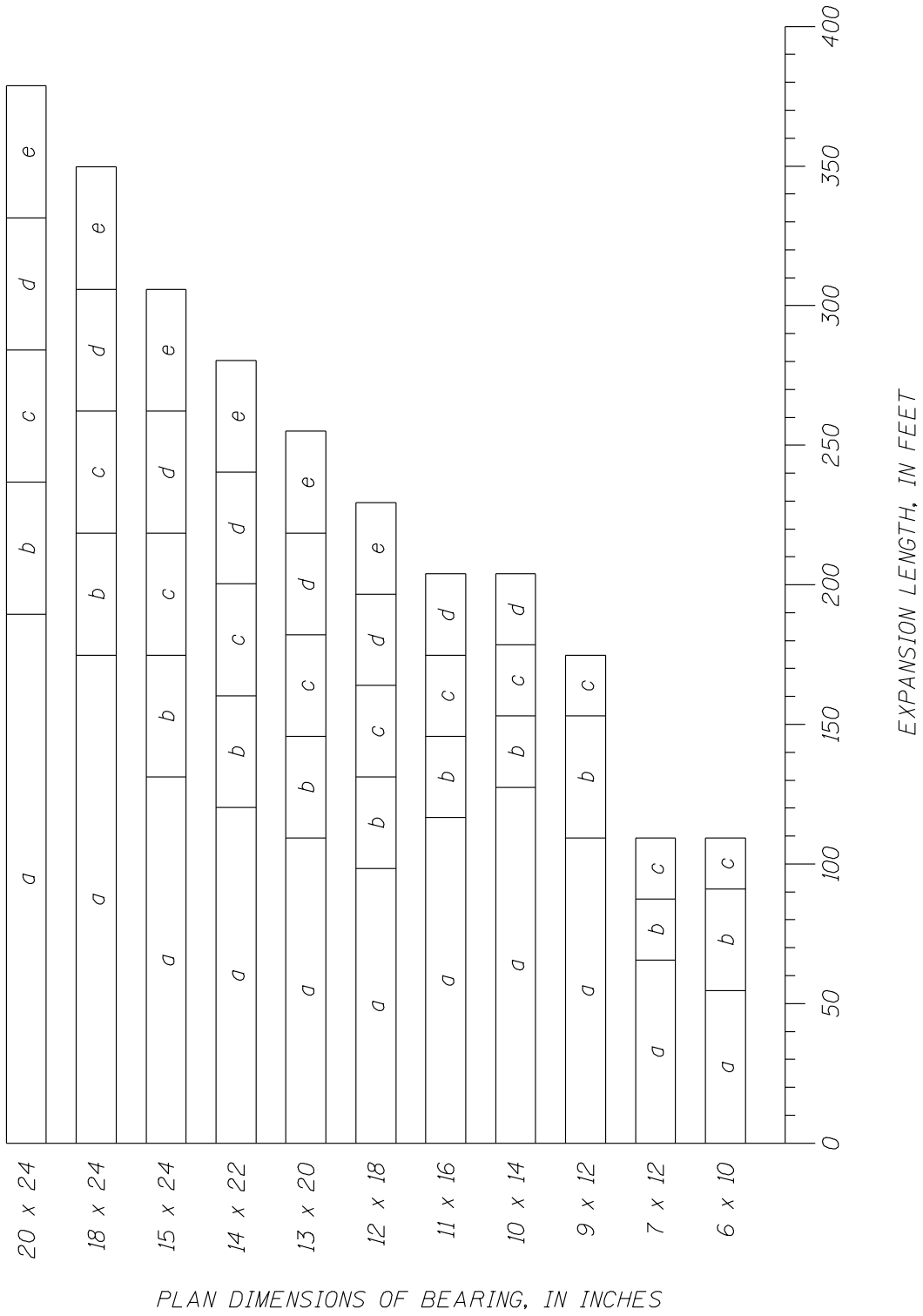

TYPE I
MINIMUM BEARING THICKNESS
VS. EXPANSION LENGTH

Figure 3.7.4-5

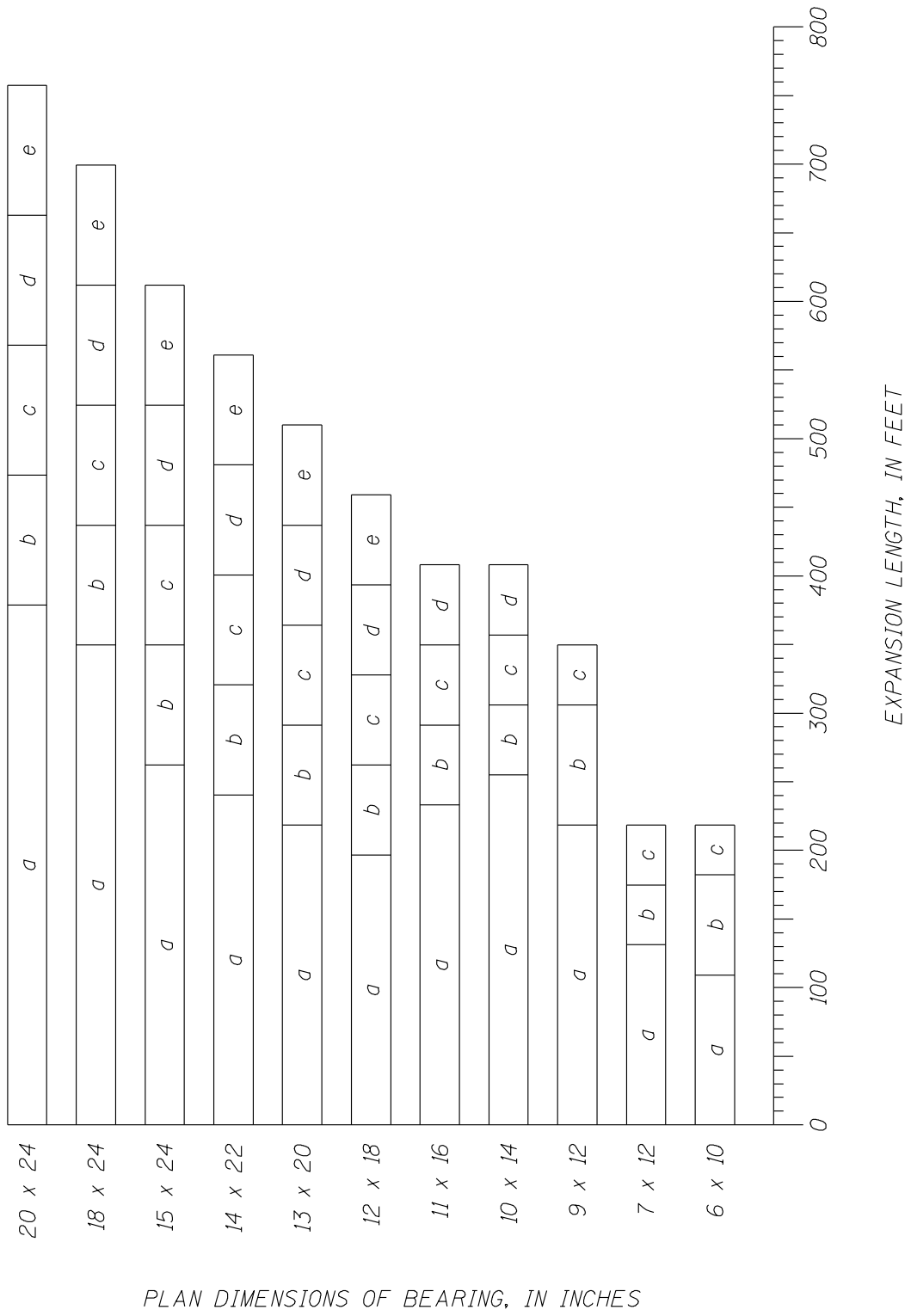

TYPE II
MINIMUM BEARING THICKNESS
VS. EXPANSION LENGTH

Figure 3.7.4-6

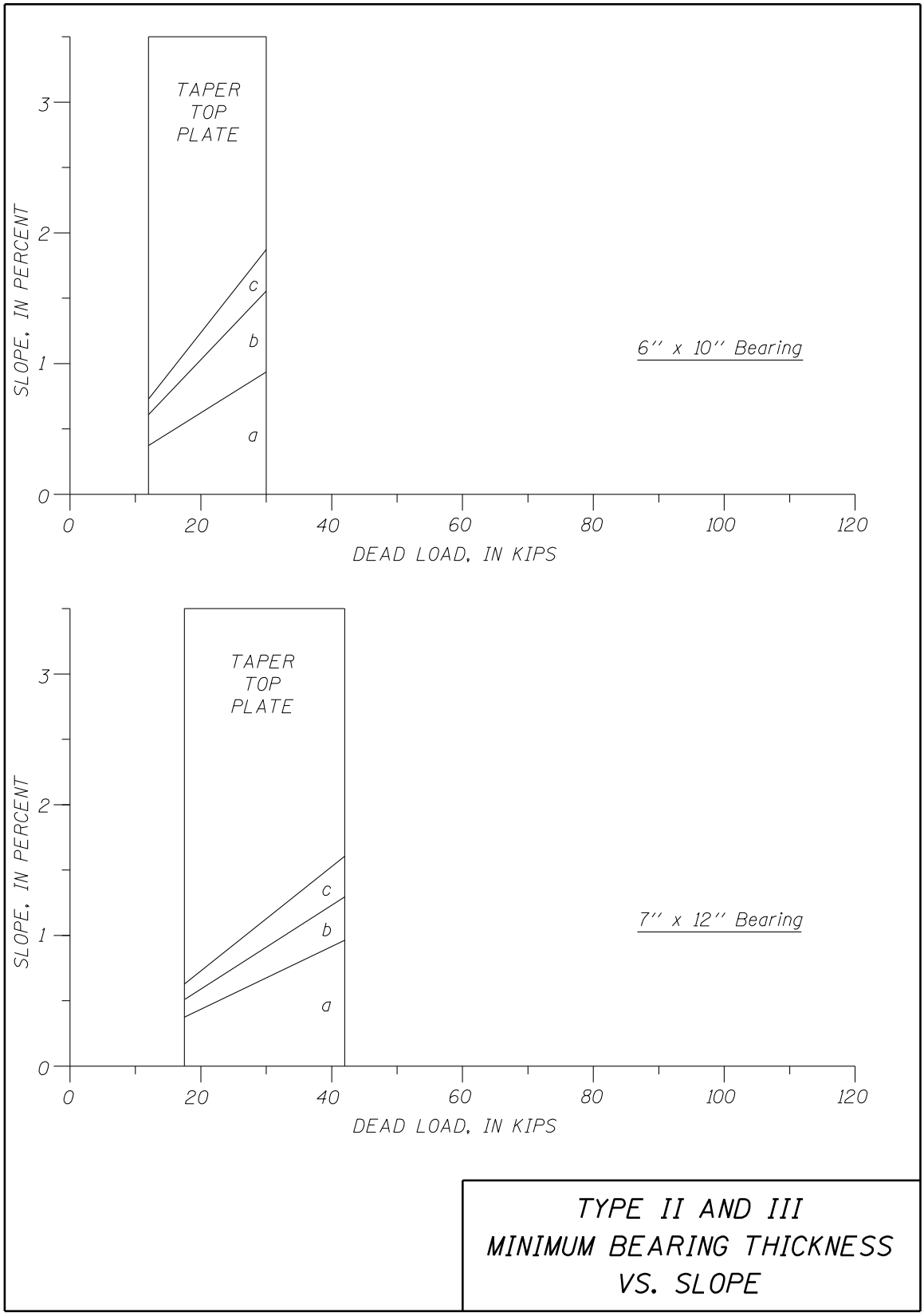
TAPER
TOP
PLATE
SLOPE, IN PERCENT
0
1
2
3
c
b
a
6'' x 10'' Bearing
0
20
40
60
80
100
120
DEAD LOAD, IN KIPS
TAPER
TOP
PLATE
SLOPE, IN PERCENT
0
1
2
3
c
b
a
7'' x 12'' Bearing
0
20
40
60
80
100
120
DEAD LOAD, IN KIPS
TYPE II AND III
MINIMUM BEARING THICKNESS
VS. SLOPE

Figure 3.7.4-7

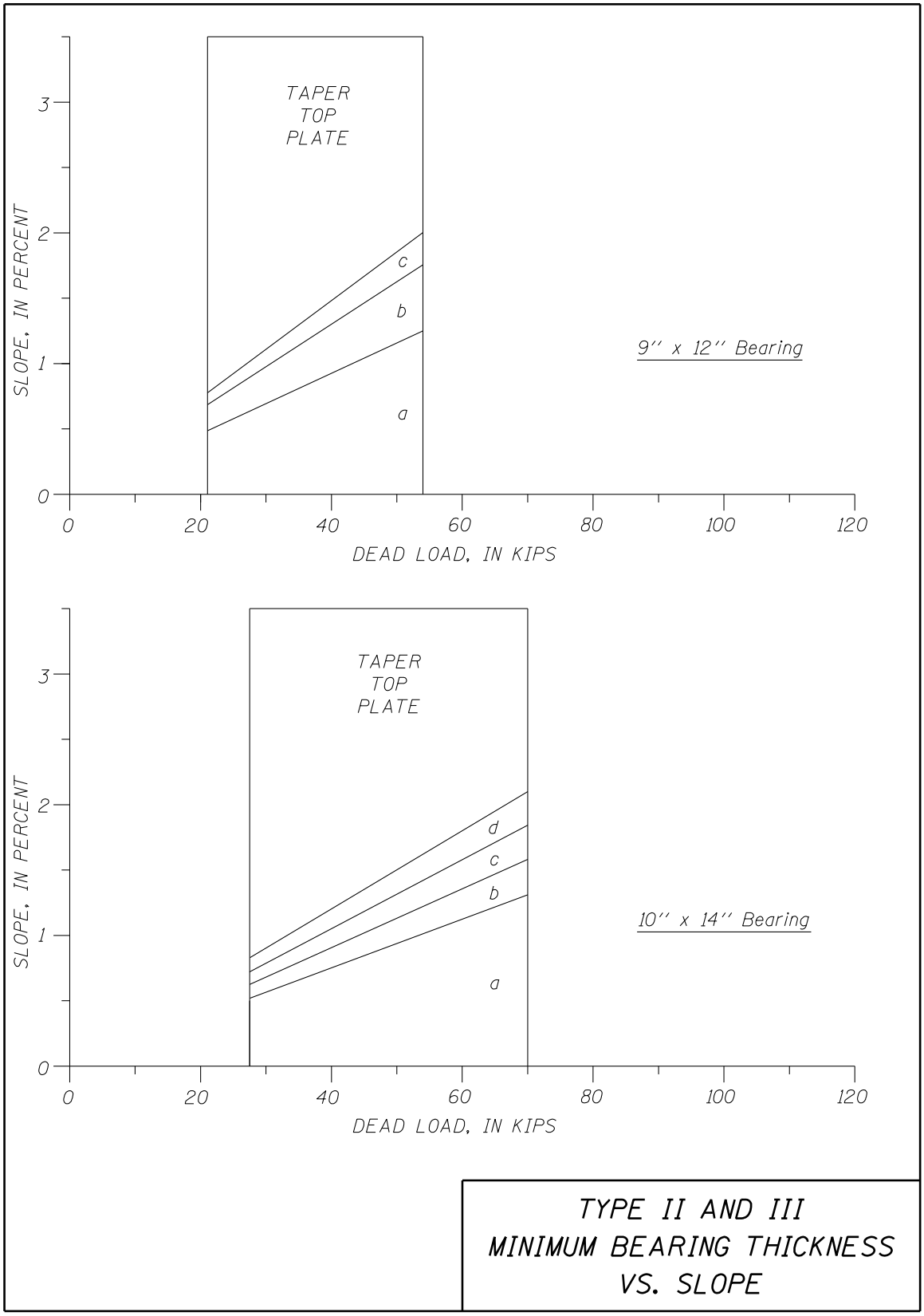
TAPER
TOP
PLATE
c
b
a
9'' x 12'' Bearing
SLOPE, IN PERCENT
DEAD LOAD, IN KIPS
0
1
2
3
0
20
40
60
80
100
120
TAPER
TOP
PLATE
d
c
b
a
10'' x 14'' Bearing
SLOPE, IN PERCENT
DEAD LOAD, IN KIPS
TYPE II AND III
MINIMUM BEARING THICKNESS
VS. SLOPE

Figure 3.7.4-8

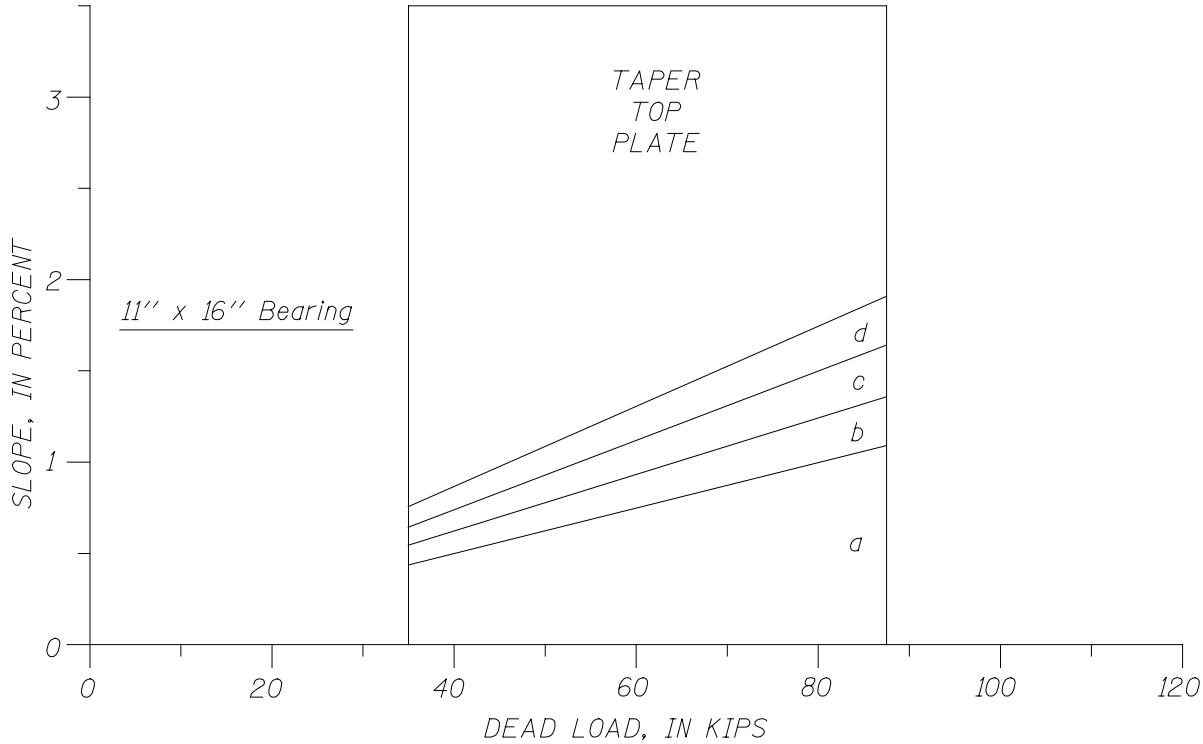

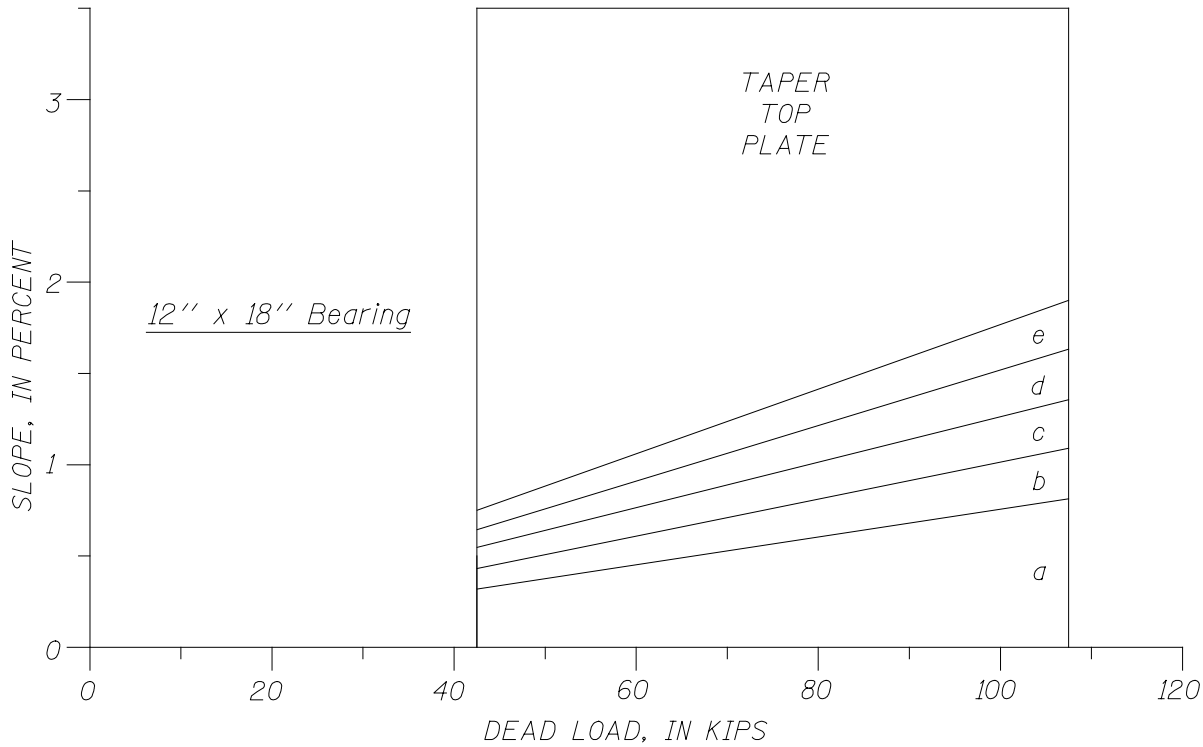

TYPE II AND III
MINIMUM BEARING THICKNESS
VS. SLOPE

Figure 3.7.4-9

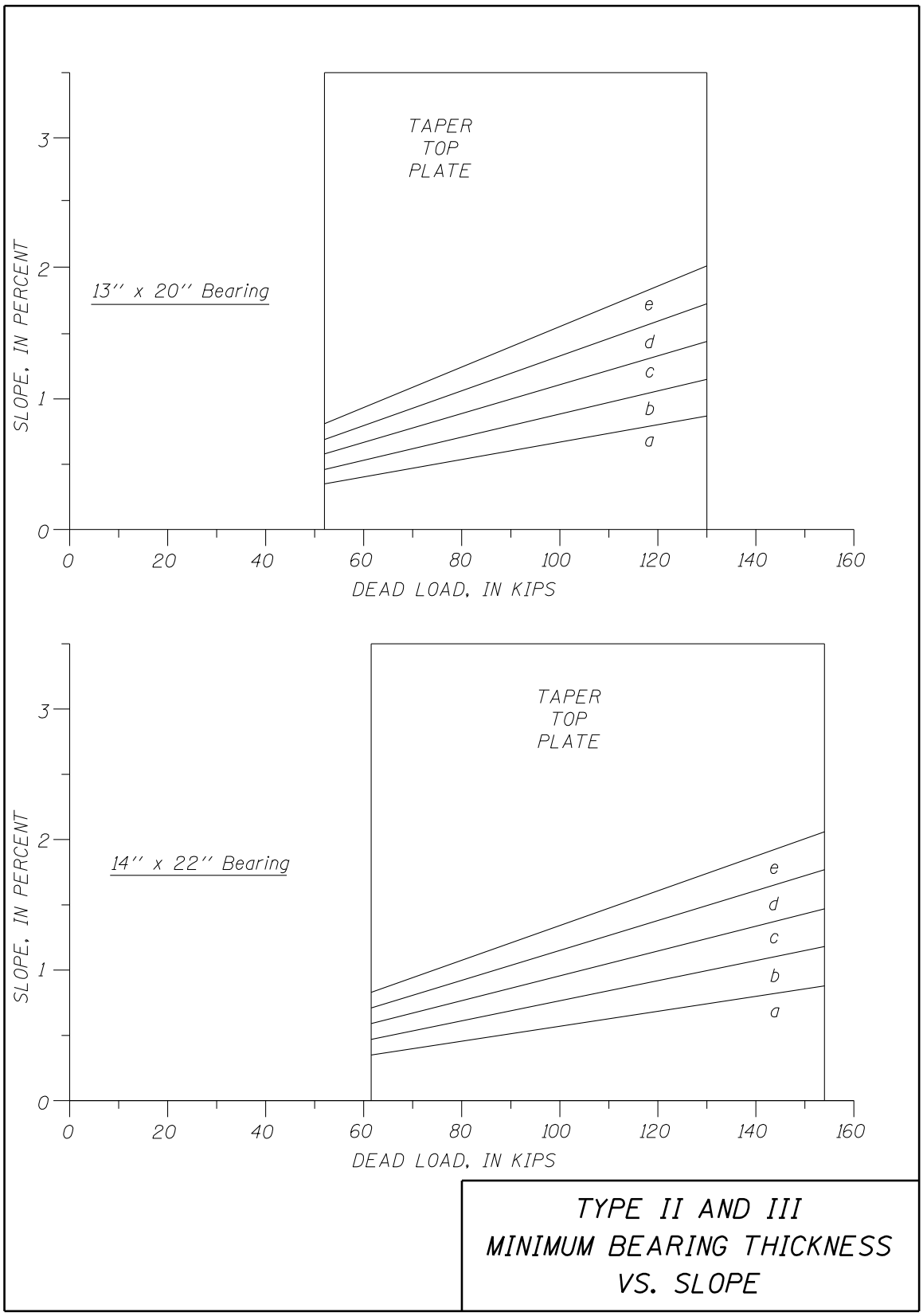

Figure 3.7.4-10

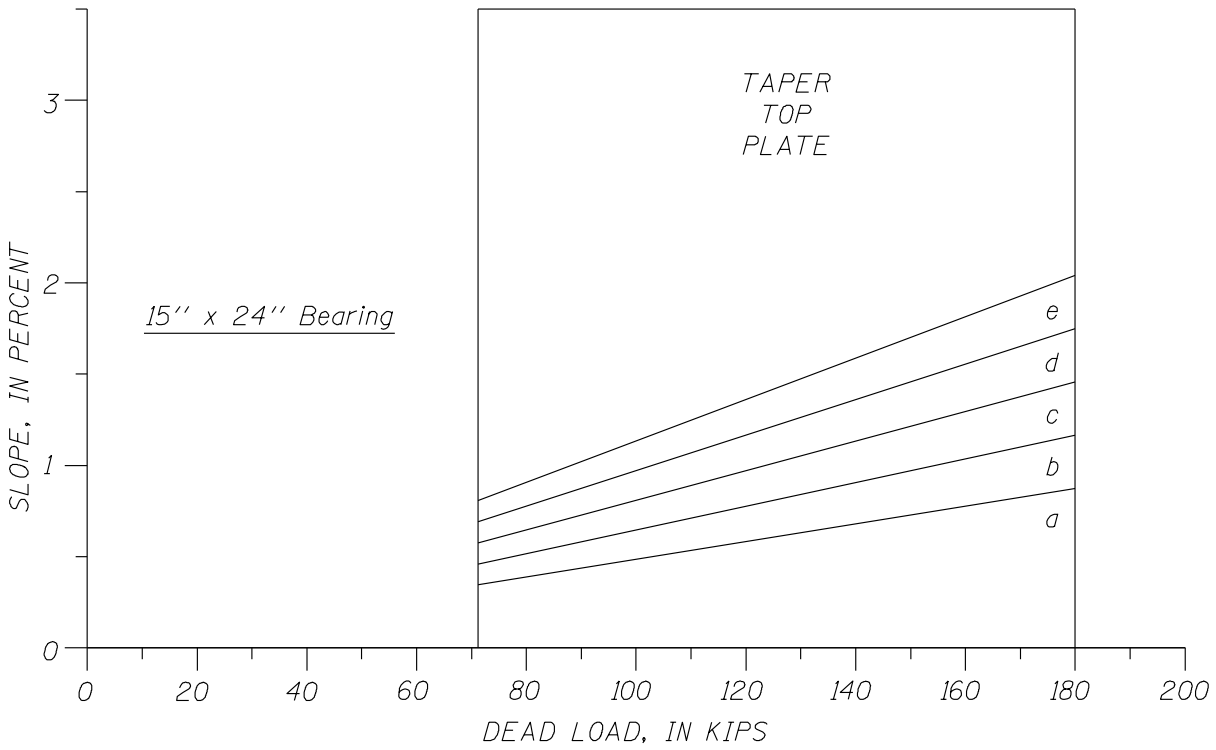

TYPE II AND III
MINIMUM BEARING THICKNESS
VS. SLOPE

Figure 3.7.4-11

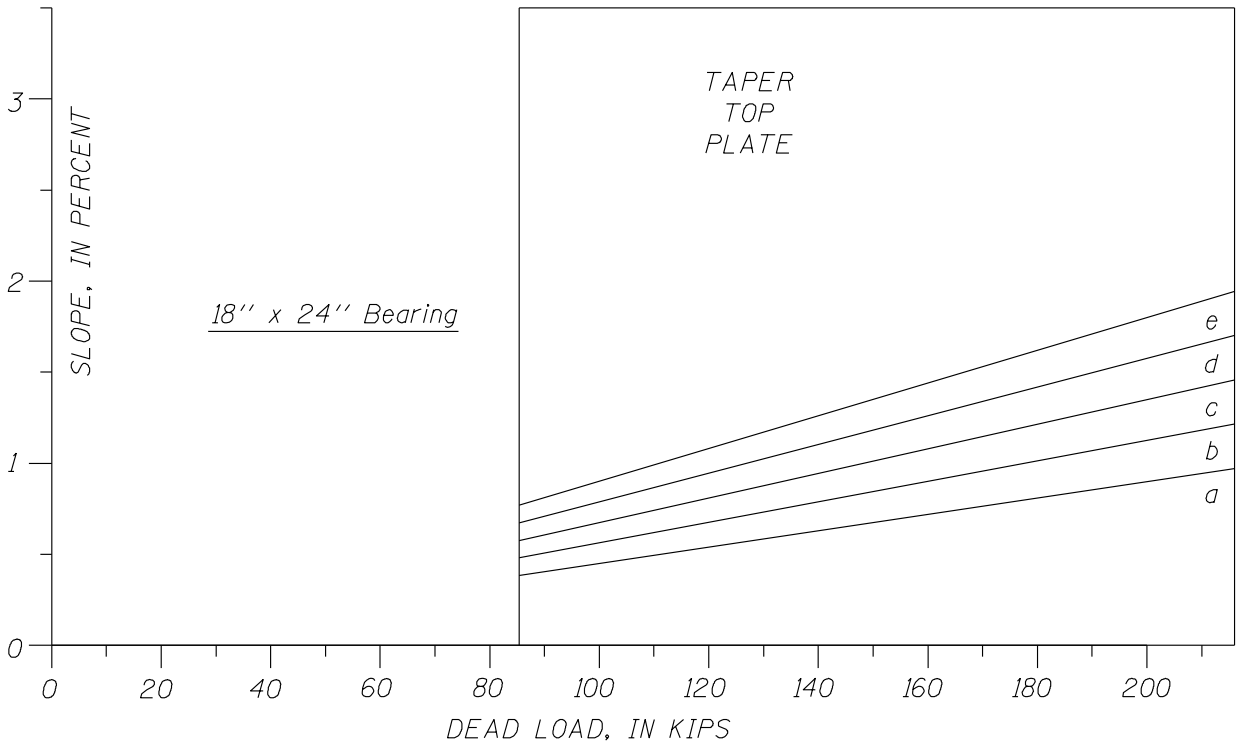

TYPE II AND III
MINIMUM BEARING THICKNESS
VS. SLOPE

Figure 3.7.4-12

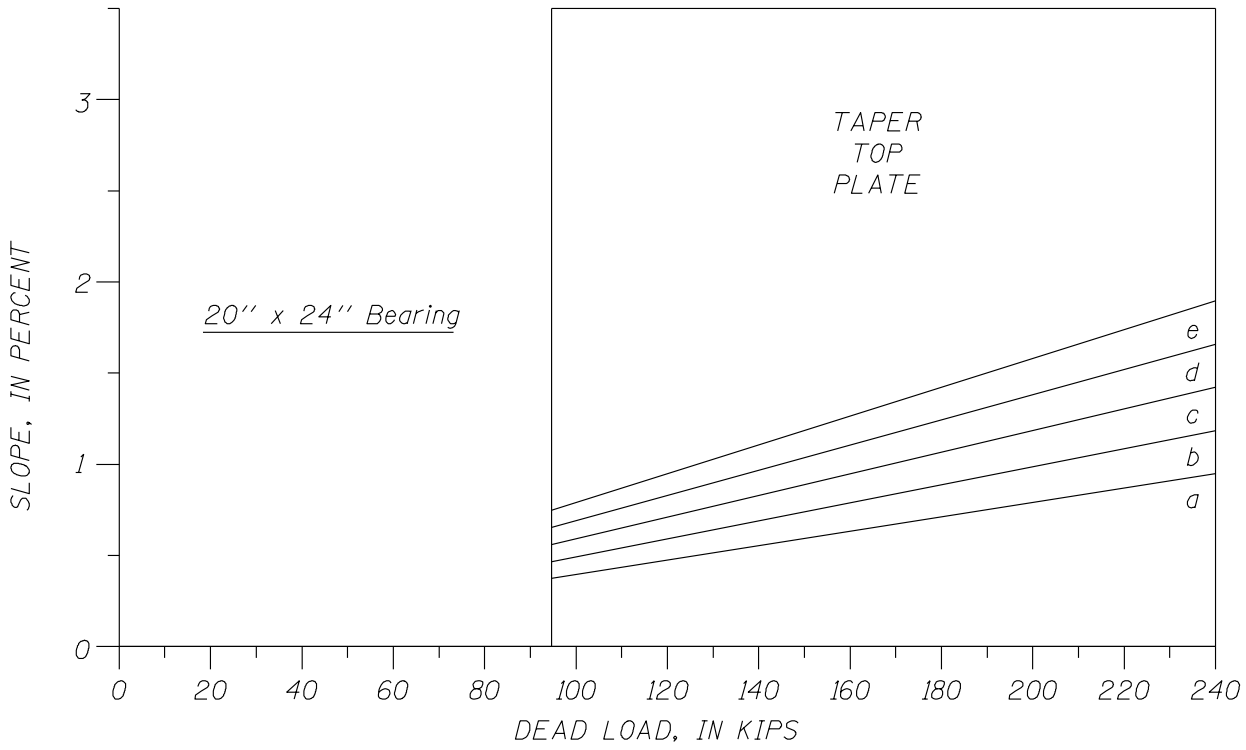

TYPE II AND III
MINIMUM BEARING THICKNESS
VS. SLOPE

Figure 3.7.4-13

TYPE I

(Maximum edge strain due to nonparallelism $\leq$.06 ERT)
(as given in the table on Figure 3.7.4-21)

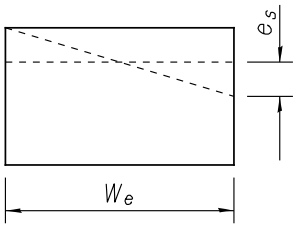

$$e_s = .06\ ERT$$

$$\text{Maximum \% Slope} = \frac{100\ e_s}{W_{e/2}}$$

$$\text{Maximum \% Slope} = \frac{12\ (ERT)}{W_e}$$

TYPE II & III

(No lift-off permitted under dead load)
(Recommended design as given in Figures 3.7.4-7 - 3.7.4-13)

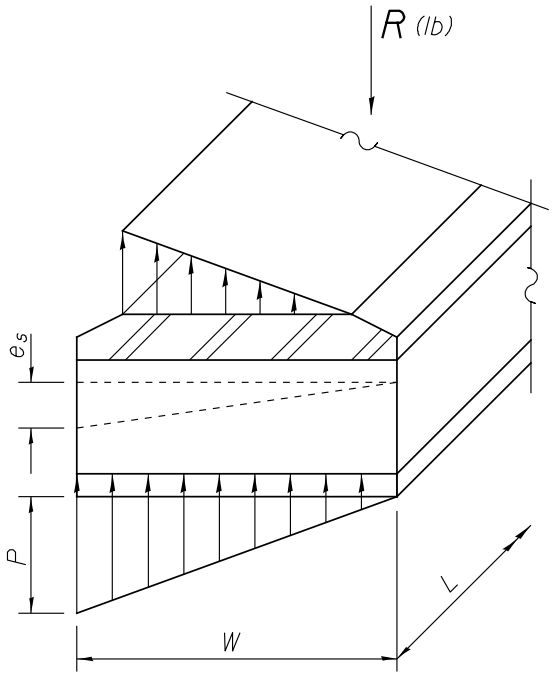

$$P = 1.4\ \frac{R}{WL}$$

$$e_s = \frac{P}{Er}(ERT)$$

$$\text{Maximum \% Slope} = \frac{100\ e_s}{W}$$

$$\text{Maximum \% Slope} = 0.012\ \frac{R\ (ERT)}{W^2 L}$$

$$Er = 1.2 \times 10^4\ \frac{psi}{in./(ERT)}$$

For $5.0 \leq SF \leq 7.0$ &
55±5 Durometer Rubber

SLOPE LIMITATIONS
FOR ELASTOMERIC
EXPANSION BEARINGS

Figure 3.7.4-14

*May be $1\frac{1}{2}''$ for smaller W shapes

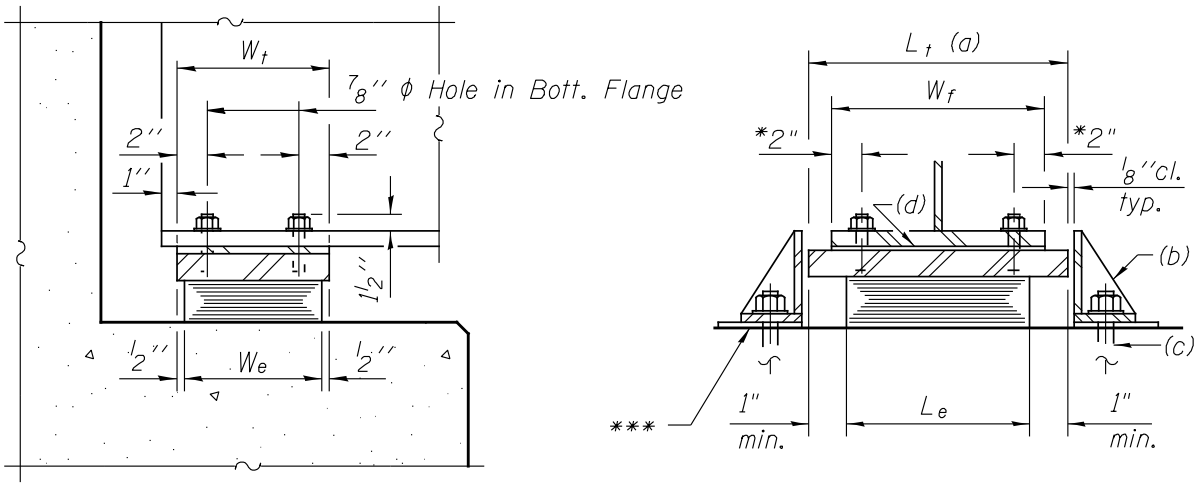

Notes:

(a) $L_t = W_f$ or L_e + 2'' whichever is greater.
(b) Side retainer.
(c) Anchor bolt. See Section 3.7.3 for required sizes.
(d) Fill plate for crown and shim plate.
(e) $1\frac{1}{2}''$ Minimum thickness.
(f) $1\frac{1}{2}''$ + flange thickness + $\frac{1}{4}''$ (for adjusting shims) + thickness of any fill plate for crown.

*** $\frac{1}{4}''$ stainless steel plate under side retainer, typ. See Fig. 3.7.4-18 for details.

Side retainers, pintles, anchor bolts, nuts, washers and bearing plates may be galvanized for steel beams and shall be galvanized for PPC I-beams according to AASHTO M111 or M232 (as applicable).

H.S. bolts may be galvanized for steel beams and shall be galvanized for PPC I-beams according to AASHTO M298, Class 50.

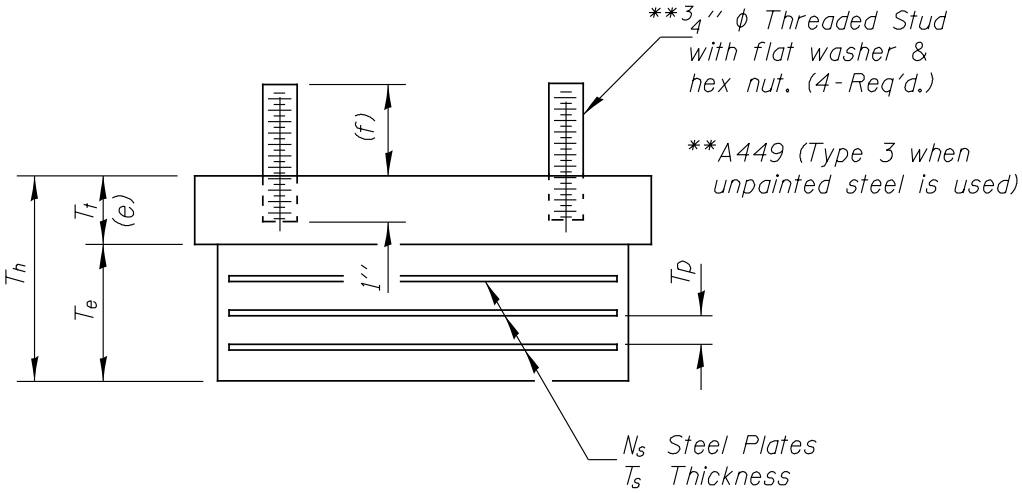

TYPE I
ELASTOMERIC
EXPANSION BEARING

Figure 3.7.4-15

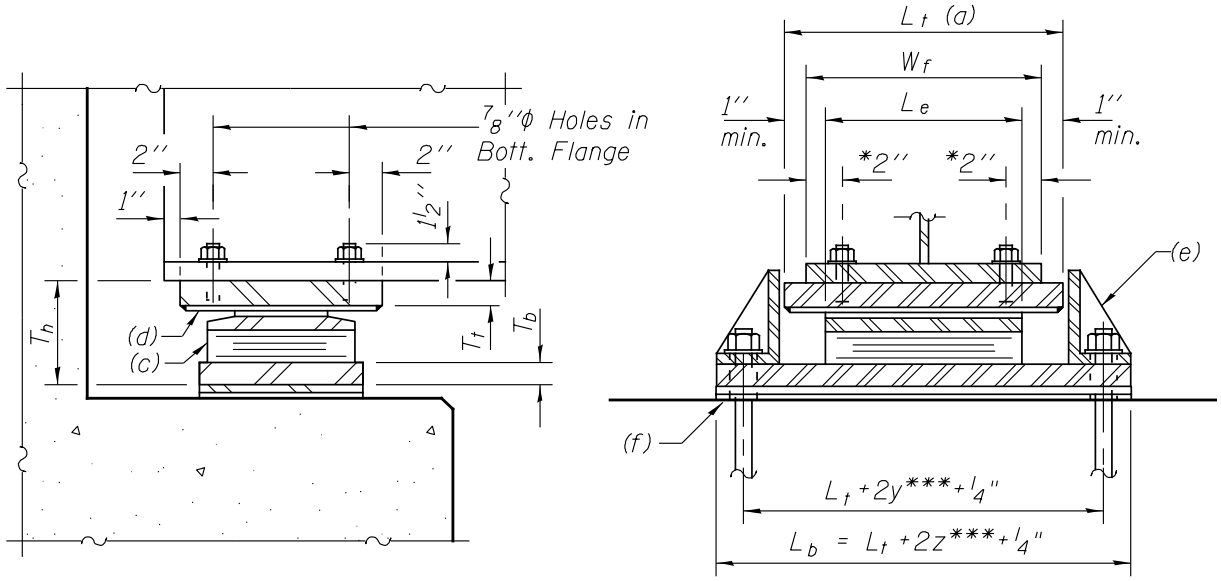

Notes:

(a) $L_t = W_f$ or L_e + 2'' whichever is greater.

(b) $W_t = W_e$ - 2A + 2E + 2'', E = Expansion from 50° normal temperature

(c) PTFE - Elastomeric bearing.

(d) 1/16'' Stainless steel sliding plate, A240, Type 304, 2B finish.

(e) Side retainer.

(f) Fill plate for crown, shim plate and 1/8'' elastomeric neoprene leveling pad according to the material properties of Article 1052.02 of the Standard Specifications. Cost of pad included with bearing.

Side retainers, pintles, anchor bolts, nuts, washers and bearing plates may be galvanized for steel beams and shall be for PPC I-beams according to AASHTO M111 or M232 (as applicable).

H.S. bolts may be galvanized for steel beams and shall be galvanized for PPC I-beams according to AASHTO M298, Class 50.

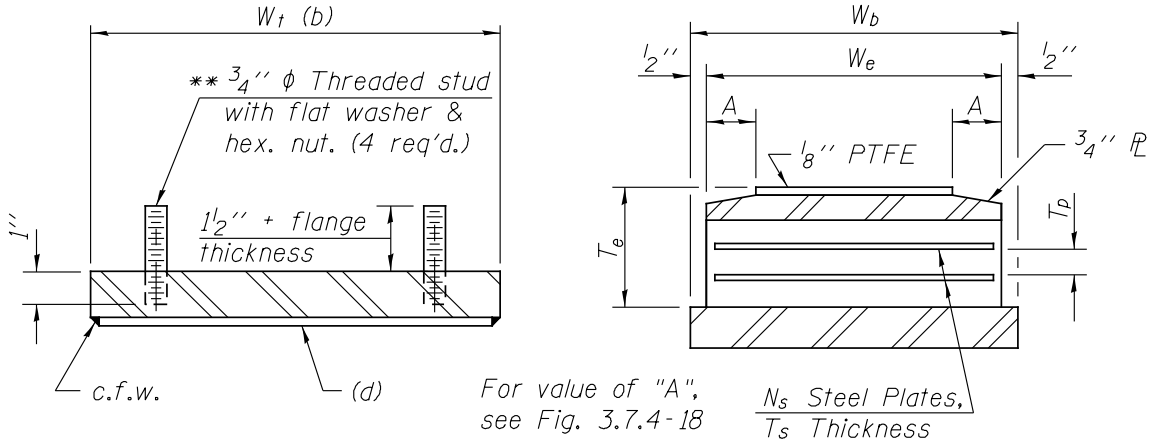

TOP BEARING ASSEMBLY

BOTTOM BEARING ASSEMBLY

* May be 1 1/2'' for smaller W shapes.

** (M164, Type 3) when unpainted steel is used.

*** See Fig. 3.7.4-18 for value of y and Fig. 3.7.4-21 for value of z.

TYPE II
ELASTOMERIC
EXPANSION BEARING

Figure 3.7.4-16

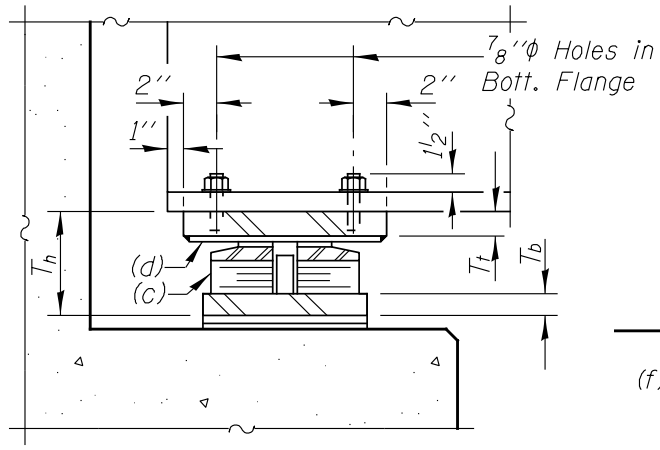

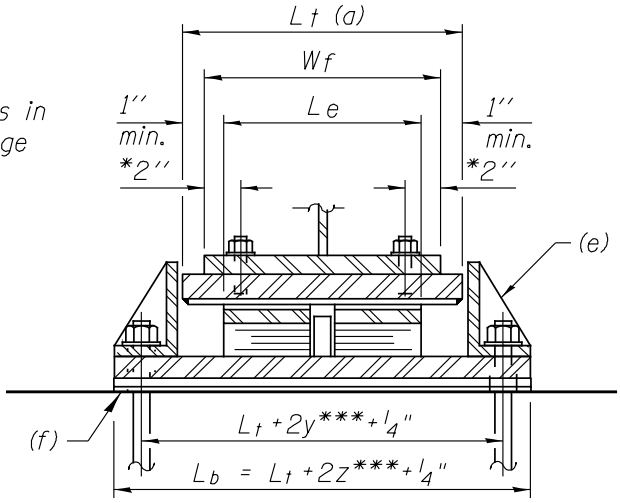

Notes:

(a) $L_t = W_f$ or L_e + 2" whichever is greater.

(b) $W_t = W_e$ - 2A + 2E + 2", E = Expansion from 50° normal temperature

(c) PTFE - Elastomeric bearing.

(d) 1/16" Stainless steel sliding plate, A240, Type 304, 2B finish.

(e) Side retainer.

(f) Fill plate for crown, shim plate and 1/8" elastomeric neoprene leveling pad according to the material properties of Article 1052.02 of the Standard Specifications. Cost of pad included with bearing.

(g) Shear restrictor pin according to the material properties of Article 1083.02(d) of the Standard Specifications.

Side retainers, pintles, anchor bolts, nuts, washers and bearing plates may be galvanized for steel beams and shall be galvanized for PPC I-beams according to AASHTO M111 or M232 (as applicable).

H.S. bolts may be galvanized for steel beams and shall be galvanized for PPC I-beams according to AASHTO M298, Class 50.

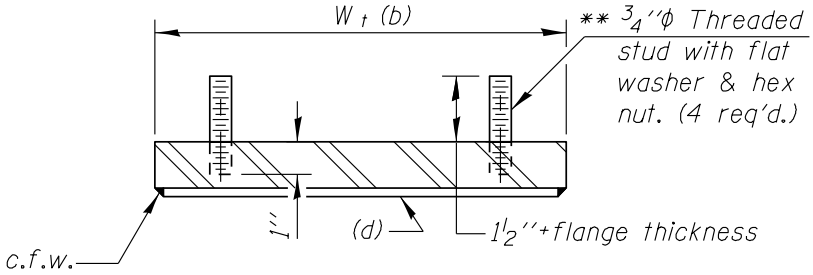

TOP BEARING ASSEMBLY

* May be 1 1/2" for smaller W shapes.

** A449 (Type 3 when unpainted steel is used).

*** See Fig. 3.7.4-18 for value of y and Fig. 3.7.4-21 for value of z.

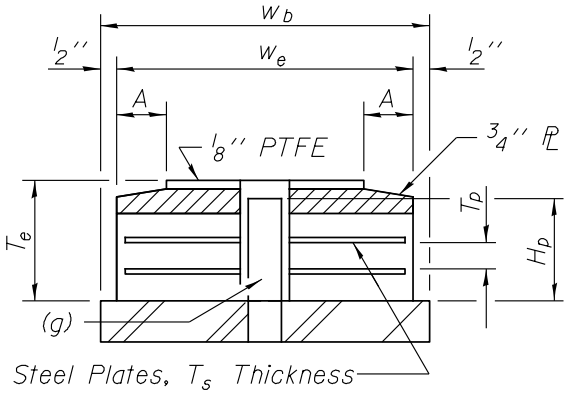

BOTTOM BEARING ASSEMBLY

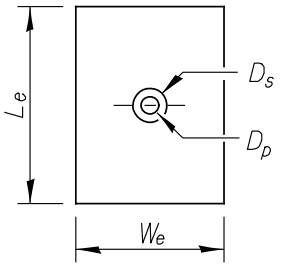

SLOT DETAIL

For value of "A" see Fig. 3.7.4-18

TYPE III
ELASTOMERIC
EXPANSION BEARING

Figure 3.7.4-17

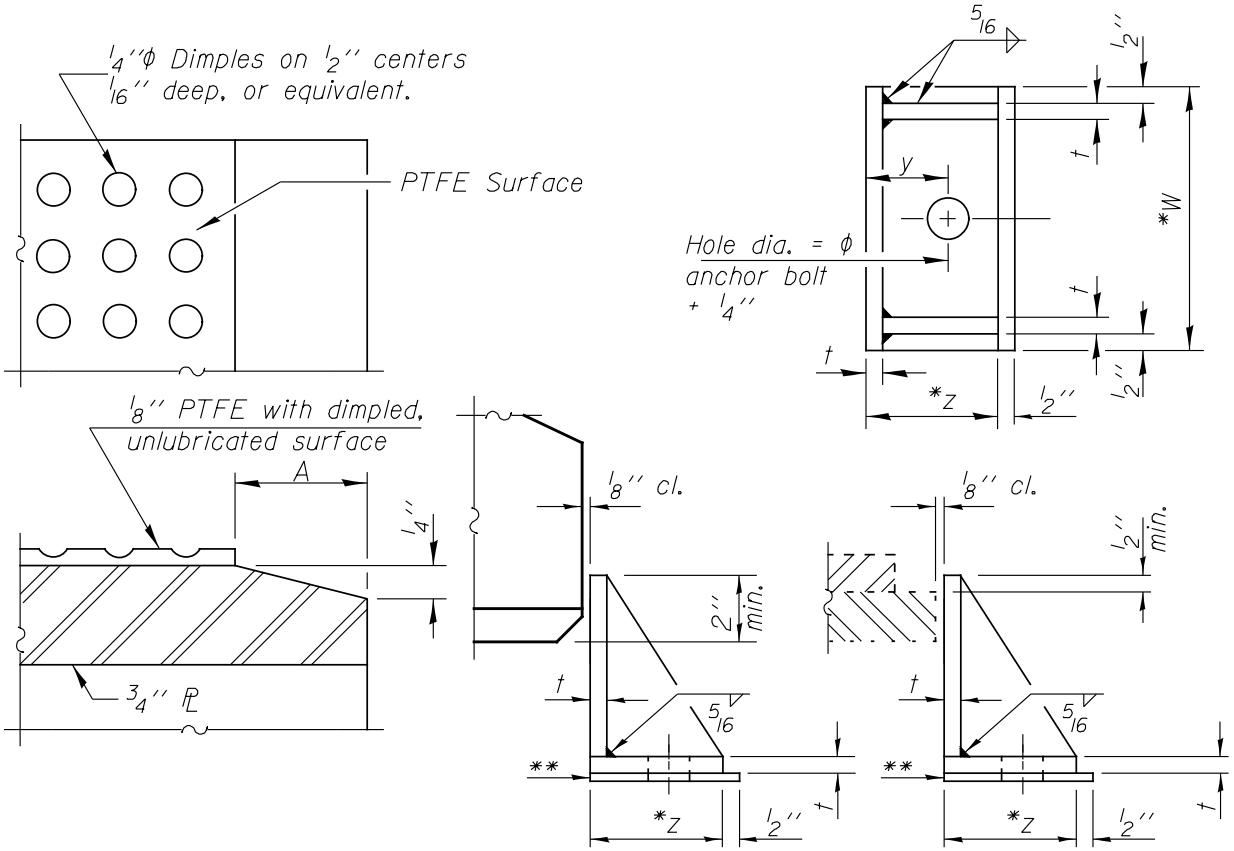

SIDE RETAINER

W_e	6″	7″	9″	10″	11″	12″	13″	14″	15″	18″	20″
A	1″	1″	1 1/2″	1 1/2″	1 1/2″	1 1/2″	1 1/2″	1 1/2″	1 1/2″	1 1/2″	1 1/2″

Notes:

The 1/8″ PTFE sheet shall be bonded directly to the top steel plate with a two-component, medium viscosity epoxy resin, conforming to the requirements of the Federal Specification MMM-A-134, Type I. The bond agent shall be applied on the full area of the contact surfaces.

Bolt ϕ	y	t
5/8″	1 3/4″	1/2″
3/4″	1 7/8″	1/2″
1″	2 1/8″	1/2″
1 1/4″	2 3/8″	1/2″
1 1/2″	2 3/4″	5/8″
2″	3 1/4″	5/8″
2 1/2″	3 3/4″	5/8″

* See Fig. 3.7.4-21 for value of W and z.

** 1/4″ Stainless steel plate, Type 304, No. 1 finish.

MISCELLANEOUS DETAILS FOR ELASTOMERIC EXPANSION BEARINGS

Figure 3.7.4-18

R = Reaction in kips (Strength I)
Include impact for top plate only.
C = 0.144 for f_y = 36 ksi.
C = 0.122 for f_y = 50 ksi.

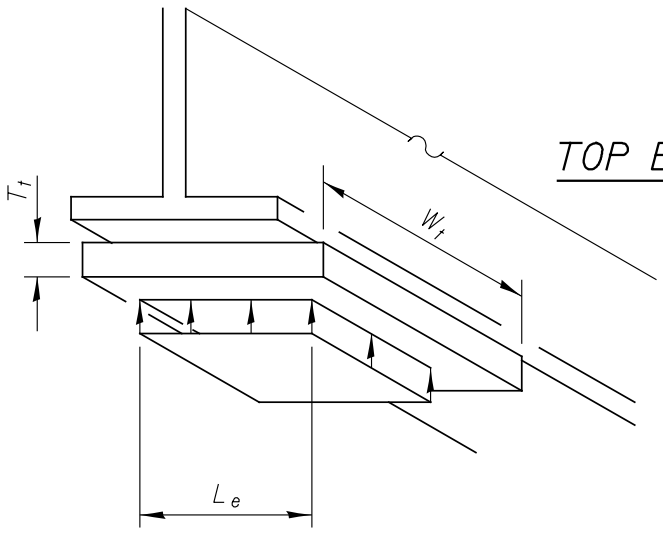

TOP BEARING PLATE THICKNESS

$$*T_t = C\sqrt{\frac{R\,L_e}{W_t}}$$

*With bearing stiffeners use 80% T_t

Minimum T_t = 1½″

BOTTOM BEARING PLATE THICKNESS

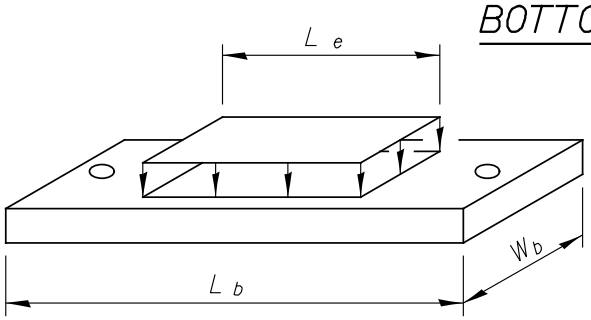

$$T_b = C\,(L_b - L_e)\sqrt{\frac{R}{L_b\,W_b}}$$

Minimum T_b = 1″

For Type III bearings, See Figure 3.7.4-23 for mininum T_b values for bearing.

ELASTOMERIC
BEARING PLATE DESIGN

Figure 3.7.4-19

Bearing Size (in.)	Type I and II (in kips) PSI 200	500	800	S.F.	Type III (in kips) PSI 200	500	*σ_s	S.F.
6 x 10	12.0	30.0	48.0	6.00	11.6	29.1	40.2	5.08
7 x 12	16.8	42.0	67.2	5.89	16.4	41.1	57.4	5.13
9 x 12	21.6	54.0	86.4	6.86	21.1	52.8	84.5	5.93
10 x 14	28.0	70.0	112.0	6.67	27.5	68.8	110.0	5.88
11 x 16	35.2	88.0	140.8	6.52	34.6	86.4	134.8	5.73
12 x 18	43.2	108.0	172.8	6.40	42.6	106.4	165.3	5.71
13 x 20	52.0	130.0	208.0	6.30	51.4	128.4	198.6	5.69
14 x 22	61.6	154.0	246.4	6.22	61.0	152.4	234.9	5.66
15 x 24	72.0	180.0	288.0	6.15	71.2	178.0	270.2	5.58
18 x 24	86.4	216.0	345.6	6.86	85.4	213.5	341.7	6.20
20 x 24	96.0	240.0	384.0	6.71	94.6	236.5	378.3	5.97

*σ_s = 136 x S.F.

Maximum σ_s = 800 psi

LOAD CAPACITY AND SHAPE FACTOR
TYPE I, II, AND III BEARINGS

Figure 3.7.4-20

Bearing	We	Le	Tp	Np	Ts	Ns	ERT	Te	Slope Max. %	W	z
6-a	6"	10"	5/16"	3	14 ga.	2	0.94"	1-1/16"	1.88	8-0"	3-7/8"
6-b	6"	10"	5/16"	5	14 ga.	4	1.56"	1-7/8"	3.13	8-0"	3-7/8"
6-c	6"	10"	5/16"	6	14 ga.	5	1.88"	2-1/4"	3.75	8-0"	3-7/8"
7-a	7"	12"	3/8"	3	3/32"	2	1.13"	1-5/16"	1.93	8-0"	4-1/4"
7-b	7"	12"	3/8"	4	3/32"	3	1.50"	1-3/4"	2.57	8-0"	4-1/4"
7-c	7"	12"	3/8"	5	3/32"	4	1.88"	2-1/4"	3.21	8-0"	4-1/4"
9-a	9"	12"	3/8"	5	3/32"	4	1.88"	2-1/4"	2.50	8-0"	5-1/2"
9-b	9"	12"	3/8"	7	3/32"	6	2.63"	3-3/16"	3.50	8-0"	5-1/2"
9-c	9"	12"	3/8"	8	3/32"	7	3.00"	3-5/8"	4.00	8-0"	5-1/2"
10-a	10"	14"	7/16"	5	1/8"	4	2.19"	2-11/16"	2.63	8-0"	5-1/2"
10-b	10"	14"	7/16"	6	1/8"	5	2.63"	3-1/4"	3.15	8-0"	5-1/2"
10-c	10"	14"	7/16"	7	1/8"	6	3.06"	3-13/16"	3.68	8-0"	5-1/2"
10-d	10"	14"	7/16"	8	1/8"	7	3.50"	4-3/8"	4.20	8-0"	5-1/2"
11-a	11"	16"	1/2"	4	1/8"	3	2.00"	2-3/8"	2.18	8-0"	6-1/4"
11-b	11"	16"	1/2"	5	1/8"	4	2.50"	3-0"	2.73	8-0"	6-1/4"
11-c	11"	16"	1/2"	6	1/8"	5	3.00"	3-5/8"	3.27	8-0"	6-1/4"
11-d	11"	16"	1/2"	7	1/8"	6	3.50"	4-1/4"	3.82	8-0"	6-1/4"
12-a	12"	18"	9/16"	3	3/16"	2	1.69"	2-1/16"	1.69	10-0"	7-1/4"
12-b	12"	18"	9/16"	4	3/16"	3	2.25"	2-13/16"	2.25	10-0"	7-1/4"
12-c	12"	18"	9/16"	5	3/16"	4	2.81"	3-9/16"	2.81	10-0"	7-1/4"
12-d	12"	18"	9/16"	6	3/16"	5	3.38"	4-5/16"	3.38	10-0"	7-1/4"
12-e	12"	18"	9/16"	7	3/16"	6	3.94"	5-1/16"	3.94	10-0"	7-1/4"
13-a	13"	20"	5/8"	3	3/16"	2	1.88"	2-1/4"	1.73	12-0"	7-7/8"
13-b	13"	20"	5/8"	4	3/16"	3	2.50"	3-1/16"	2.31	12-0"	7-7/8"
13-c	13"	20"	5/8"	5	3/16"	4	3.13"	3-7/8"	2.88	12-0"	7-7/8"
13-d	13"	20"	5/8"	6	3/16"	5	3.75"	4-11/16"	3.46	12-0"	7-7/8"
13-e	13"	20"	5/8"	7	3/16"	6	4.38"	5-1/2"	4.04	12-0"	7-7/8"
14-a	14"	22"	11/16"	3	3/16"	2	2.06"	2-7/16"	1.77	14-0"	8-3/4"
14-b	14"	22"	11/16"	4	3/16"	3	2.75"	3-5/16"	2.36	14-0"	8-3/4"
14-c	14"	22"	11/16"	5	3/16"	4	3.44"	4-3/16"	2.95	14-0"	8-3/4"
14-d	14"	22"	11/16"	6	3/16"	5	4.13"	5-1/16"	3.54	14-0"	8-3/4"
14-e	14"	22"	11/16"	7	3/16"	6	4.81"	5-15/16"	4.13	14-0"	8-3/4"
15-a	15"	24"	3/4"	3	3/16"	2	2.25"	2-5/8"	1.80	16-0"	9-3/8"
15-b	15"	24"	3/4"	4	3/16"	3	3.00"	3-9/16"	2.40	16-0"	9-3/8"
15-c	15"	24"	3/4"	5	3/16"	4	3.75"	4-1/2"	3.00	16-0"	9-3/8"
15-d	15"	24"	3/4"	6	3/16"	5	4.50"	5-7/16"	3.60	16-0"	9-3/8"
15-e	15"	24"	3/4"	7	3/16"	6	5.25"	6-3/8"	4.20	16-0"	9-3/8"
18-a	18"	24"	3/4"	4	3/16"	3	3.00"	3-9/16"	2.00	19-0"	10-3/8"
18-b	18"	24"	3/4"	5	3/16"	4	3.75"	4-1/2"	2.50	19-0"	10-3/8"
18-c	18"	24"	3/4"	6	3/16"	5	4.50"	5-7/16"	3.00	19-0"	10-3/8"
18-d	18"	24"	3/4"	7	3/16"	6	5.25"	6-3/8"	3.50	19-0"	10-3/8"
18-e	18"	24"	3/4"	8	3/16"	7	6.00"	7-5/16"	4.00	19-0"	10-3/8"
20-a	20"	24"	13/16"	4	3/16"	3	3.25"	3-13/16"	1.95	21-0"	10-3/8"
20-b	20"	24"	13/16"	5	3/16"	4	4.06"	4-13/16"	2.44	21-0"	10-3/8"
20-c	20"	24"	13/16"	6	3/16"	5	4.88"	5-13/16"	2.93	21-0"	10-3/8"
20-d	20"	24"	13/16"	7	3/16"	6	5.69"	6-13/16"	3.41	21-0"	10-3/8"
20-e	20"	24"	13/16"	8	3/16"	7	6.50"	7-13/16"	3.90	21-0"	10-3/8"

TABLE OF DIMENSIONS
TYPE I BEARING

Figure 3.7.4-21

Bearing	We	Le	Tp	Np	Ts	Ns	ERT	Te
6-a	6"	10"	5/16"	3	14 ga.	2	0.94"	1-15/16"
6-b	6"	10"	5/16"	5	14 ga.	4	1.56"	2-3/4"
6-c	6"	10"	5/16"	6	14 ga.	5	1.88"	3-1/8"
7-a	7"	12"	3/8"	3	3/32"	2	1.13"	2-3/16"
7-b	7"	12"	3/8"	4	3/32"	3	1.50"	2-5/8"
7-c	7"	12"	3/8"	5	3/32"	4	1.88"	3-1/8"
9-a	9"	12"	3/8"	5	3/32"	4	1.88"	3-1/8"
9-b	9"	12"	3/8"	7	3/32"	6	2.63"	4-1/16"
9-c	9"	12"	3/8"	8	3/32"	7	3.00"	4-1/2"
10-a	10"	14"	7/16"	5	1/8"	4	2.19"	3-9/16"
10-b	10"	14"	7/16"	6	1/8"	5	2.63"	4-1/8"
10-c	10"	14"	7/16"	7	1/8"	6	3.06"	4-11/16"
10-d	10"	14"	7/16"	8	1/8"	7	3.50"	5-1/4"
11-a	11"	16"	1/2"	4	1/8"	3	2.00"	3-1/4"
11-b	11"	16"	1/2"	5	1/8"	4	2.50"	3-7/8"
11-c	11"	16"	1/2"	6	1/8"	5	3.00"	4-1/2"
11-d	11"	16"	1/2"	7	1/8"	6	3.50"	5-1/8"
12-a	12"	18"	9/16"	3	3/16"	2	1.69"	2-15/16"
12-b	12"	18"	9/16"	4	3/16"	3	2.25"	3-11/16"
12-c	12"	18"	9/16"	5	3/16"	4	2.81"	4-7/16"
12-d	12"	18"	9/16"	6	3/16"	5	3.38"	5-3/16"
12-e	12"	18"	9/16"	7	3/16"	6	3.94"	5-15/16"
13-a	13"	20"	5/8"	3	3/16"	2	1.88"	3-1/8"
13-b	13"	20"	5/8"	4	3/16"	3	2.50"	3-15/16"
13-c	13"	20"	5/8"	5	3/16"	4	3.13"	4-3/4"
13-d	13"	20"	5/8"	6	3/16"	5	3.75"	5-9/16"
13-e	13"	20"	5/8"	7	3/16"	6	4.38"	6-3/8"
14-a	14"	22"	11/16"	3	3/16"	2	2.06"	3-5/16"
14-b	14"	22"	11/16"	4	3/16"	3	2.75"	4-3/16"
14-c	14"	22"	11/16"	5	3/16"	4	3.44"	5-1/16"
14-d	14"	22"	11/16"	6	3/16"	5	4.13"	5-15/16"
14-e	14"	22"	11/16"	7	3/16"	6	4.81"	6-13/16"
15-a	15"	24"	3/4"	3	3/16"	2	2.25"	3-1/2"
15-b	15"	24"	3/4"	4	3/16"	3	3.00"	4-7/16"
15-c	15"	24"	3/4"	5	3/16"	4	3.75"	5-3/8"
15-d	15"	24"	3/4"	6	3/16"	5	4.50"	6-5/16"
15-e	15"	24"	3/4"	7	3/16"	6	5.25"	7-1/4"
18-a	18"	24"	3/4"	4	3/16"	3	3.00"	4-7/16"
18-b	18"	24"	3/4"	5	3/16"	4	3.75"	5-3/8"
18-c	18"	24"	3/4"	6	3/16"	5	4.50"	6-5/16"
18-d	18"	24"	3/4"	7	3/16"	6	5.25"	7-1/4"
18-e	18"	24"	3/4"	8	3/16"	7	6.00"	8-3/16"
20-a	20"	24"	13/16"	4	3/16"	3	3.25"	4-11/16"
20-b	20"	24"	13/16"	5	3/16"	4	4.06"	5-11/16"
20-c	20"	24"	13/16"	6	3/16"	5	4.88"	6-11/16"
20-d	20"	24"	13/16"	7	3/16"	6	5.69"	7-11/16"
20-e	20"	24"	13/16"	8	3/16"	7	6.50"	8-11/16"

TABLE OF DIMENSIONS
TYPE II AND III BEARINGS

Figure 3.7.4-22

Bearing	Tb*(Gr 36)	Tb*(Gr 50)	Dp	Ds	Hp
6-a	1"	1"	1"	1-1/2"	1-1/2"
6-b	1"	1"	1"	1-1/2"	2-1/4"
6-c	1"	1"	1"	1-1/2"	2-1/2"
7-a	1"	1"	1"	1-1/2"	1-3/4"
7-b	1-1/4"	1"	1"	1-1/2"	2-1/4"
7-c	1-1/4"	1"	1"	1-1/2"	2-1/2"
9-a	1-1/4"	1-1/4"	1-1/4"	1-3/4"	2-1/2"
9-b	1-1/2"	1-1/4"	1-1/4"	1-3/4"	3-1/2"
9-c	1-1/2"	1-1/4"	1-1/4"	1-3/4"	4"
10-a	1-1/2"	1-1/4"	1-1/4"	1-3/4"	3"
10-b	1-3/4"	1-1/2"	1-1/4"	1-3/4"	3-1/2"
10-c	1-3/4"	1-1/2"	1-1/4"	1-3/4"	4-1/4"
10-d	2"	1-3/4"	1-1/4"	1-3/4"	4-3/4"
11-a	1-1/2"	1-1/2"	1-1/2"	2"	2-3/4"
11-b	1-3/4"	1-1/2"	1-1/2"	2"	3-1/4"
11-c	1-3/4"	1-1/2"	1-1/2"	2"	4"
11-d	2"	1-3/4"	1-1/2"	2"	4-3/4"
12-a	1-3/4"	1-1/2"	1-1/2"	2"	2-1/2"
12-b	1-3/4"	1-1/2"	1-1/2"	2"	3-1/4"
12-c	2"	1-3/4"	1-1/2"	2"	4"
12-d	2-1/4"	1-3/4"	1-1/2"	2"	4-3/4"
12-e	2-1/4"	2"	1-1/2"	2"	5-1/2"
13-a	1-3/4"	1-1/2"	1-1/2"	2"	2-3/4"
13-b	2"	1-3/4"	1-1/2"	2"	3-1/2"
13-c	2-1/4"	2"	1-1/2"	2"	4-1/4"
13-d	2-1/2"	2-1/4"	1-1/2"	2"	5-1/4"
13-e	2-3/4"	2-1/4"	1-1/2"	2"	6"
14-a	2"	1-3/4"	1-1/2"	2"	3"
14-b	2-1/4"	2"	1-1/2"	2"	3-3/4"
14-c	2-1/2"	2-1/4"	1-1/2"	2"	4-3/4"
14-d	2-3/4"	2-1/2"	1-1/2"	2"	5-1/2"
14-e	3"	2-1/2"	1-1/2"	2"	6-1/2"
15-a	2"	1-3/4"	1-3/4"	2-1/4"	3"
15-b	2-1/2"	2"	1-3/4"	2-1/4"	4"
15-c	2-3/4"	2-1/4"	1-3/4"	2-1/4"	5"
15-d	3"	2-1/2"	1-3/4"	2-1/4"	6"
15-e	3"	2-1/2"	1-3/4"	2-1/4"	6-3/4"
18-a	2-1/2"	2"	2"	2-1/2"	4"
18-b	2-3/4"	2-1/4"	2"	2-1/2"	5"
18-c	3"	2-1/2"	2"	2-1/2"	6"
18-d	3-1/4"	2-3/4"	2"	2-1/2"	6-3/4"
18-e	3-1/4"	2-3/4"	2"	2-1/2"	7-3/4"
20-a	2-1/2"	2-1/2"	2-1/2"	3"	4-1/4"
20-b	2-3/4"	2-1/2"	2-1/2"	3"	5-1/4"
20-c	2-3/4"	2-1/2"	2-1/2"	3"	6-1/4"
20-d	3"	2-1/2"	2-1/2"	3"	7-1/4"
20-e	3-1/4"	2-3/4"	2-1/2"	3"	8-1/4"

*Tb thickness is governed by the bearing stress of the pin to plate; however, Tb shall not be less than Dp.
Hp = Te – ((3/4 ÷ 2) + 1/8”) then round up to nearest ¼”.

TABLE OF DIMENSIONS
TYPE III BEARING

Figure 3.7.4-23