# Illinois Department of Transportation

| | | | |
|---|---|---|---|
| To: | Keith Roberts | Attn: Kirk H. Brown | |
| From: | Jack A. Elston | By: Michael Brand | Michael Brand |
| Subject: | Pavement Design Approval | | |
| Date: | July 23, 2020 | | |

| | | | |
|---|---|---|---|
| Route: | IL 111 | Job No.: | D-90-071-04 |
| Section: | 60-3K-1 | Contract No.: | 76818 |
| County: | Madison | Target Letting: | |
| Limits: | Interchange with I-270 | | |

We have reviewed the pavement design for the above referenced project which was most recently submitted on July 13, 2020. The project will reconstruct about 3000 feet of IL 111, as well as its interchange with I-270, to provide a diverging diamond configuration along with additional thru and turn lanes.

We concur with the district this is a special design due to the high volume of fully loaded trucks present and anticipated at the interchange. We also agree with the District's recommendation to use a mechanistic rigid pavement design.

In summary, the approved pavement design is as follows:

<u>IL 111 and the Interchange Ramps - Reconstruction</u>
11" JPCP with 11" tied PCC Shoulders
4" Stabilized Subbase
12" Aggregate Subgrade Improvement

If you have any questions, please contact Mike Brand at (217) 782-7651.

# Illinois Department of Transportation

## Memorandum

| | | | |
|---|---|---|---|
| To: | Jack Elston | Attn.: | Michael Brand |
| From: | Keith Roberts | By: | Kirk H. Brown |
| Subject: | Pavement Design Review – Special Design | | |
| Date: | July 13, 2020 | | |

FAP Route 582 (IL 111)
Section 60-3K-1
Madison County
Job No. D-90-071-04

Interchange Reconstruction of I-270 Ramps and IL 111

This project will reconstruct the existing cloverleaf interchange on I-270 at IL 111 with the goal to improve safety, reduce congestion, and enhance mobility for freight. This interchange is the primary access point for the Gateway Commerce Center, a 2300-acre warehouse distribution center, and the Gateway TradePort, a 7,500,000 SF, 600-acre, planned industrial park in the southwest quadrant of I-270/IL 111 interchange. The interchange serves the largest warehousing complexes in the Metro East while also serving multiple truck-related businesses, such as truck stops, service stations, restaurants, a hotel, and overnight parking. The existing interchange is geometrically deficient with insufficient ramp radii and terminal lengths, inadequate acceleration and deceleration, short weaving distances between loop ramps, and deficient vertical clearances on IL 111. In addition, the intersection of IL 111 and Chain of Rocks Road is within 400 feet of the interchange ramps and experiences excessive queues. Due to the high volume of trucks utilizing this interchange, the geometric deficiencies of the interchange, and the proximity of Chain of Rocks Road, congestion is regularly experienced during the peak hours and contributes to poor truck driver behavior. This location will benefit from a new interchange type, such as a diverging diamond interchange (DDI), which is currently proposed.

The proposed typical section for IL 111 will consist of 4-5 travel lanes varying from 12-15 feet with the median varying from 0-18 feet. There will also be additional turn lanes varying from 1 to 3 – 12 foot lanes.

**Project Information IL-111**

- IL 111 is designated as “Other Principal Arterial”
- Illinois Route 111 has a Class II truck route classification and is part of the National Highway System (NHS).
- Design Period of 20 years
- Total length of improvement of IL 111 is 3,075’

- Approximate areas IL 111
  - Pavement: 32,288 square yards
  - Shoulders: 6,600 square yards
- Traffic data for IL 111 was taken from the IDOT's Traffic Survey 2017
  - 2024 = 17,550 ADT
  - 2044 = 21,400 ADT
  - PV = 72.6%, SU = 7.9%, MU = 19.5%

**Project Information (IL-111 Interchange Ramps)**

- IL 111 Ramps are designated as "Interstate or Freeway"
- Approximate areas IL 111 Ramps
  - Ramp A
    - Pavement: 4,179 square yards
    - Shoulders: 2,324 square yards
  - Ramp B
    - Pavement: 4.989 square yards
    - Shoulders: 1,684 square yards
  - Ramp C
    - Pavement: 4,194 square yards
    - Shoulders: 1,971 square yards
  - Ramp D
    - Pavement: 4,800 square yards
    - Shoulders: 2,634 square yards

Traffic data for IL 111 Ramps was taken from the IDOT's Traffic Survey 2017

- Ramp A
  - 2024 = 4,100 ADT
  - 2044 = 5,100 ADT
  - PV = 64.9%, SU = 11.7%, MU = 23.4%
  - Lanes vary from 1 16' lane to 2 12' lanes to 4 12' lanes. Shoulder widths are 10' for the outside shoulders and 6' for the inside shoulders.
- Ramp B
  - 2024 = 4,400 ADT
  - 2044 = 5,300 ADT
  - PV = 68.7%, SU = 12.5%, MU = 18.8%
  - Lanes vary from 1 16' lane to 2 12' lanes to 3 16' lanes. Shoulder widths are 10' for the outside shoulders and 6' for the inside shoulders.
- Ramp C
  - 2024 = 4,700 ADT
  - 2044 = 5,700 ADT
  - PV = 59.8%, SU = 16.7%, MU = 23.5%
  - Lanes vary from 1 16' lane to 2 12' lanes to 4 12' lanes. Shoulder widths are 10' for the outside shoulders and 6' for the inside shoulders.
- Ramp D
  - 2024 = 3,900 ADT
  - 2044 = 4,800 ADT
  - PV = 64.3%, SU = 9.2%, MU = 26.5%
  - Lanes vary from 1 16' to 2 16' lanes. Shoulder widths are 10' for the outside shoulders and 6' for the inside shoulders.

**Additional Design Considerations**

- Currently a large trucking facility (Flying J Truck Stop) generates large truck volumes at the intersection of Chain of Rocks Road and Illinois Route 111. This facility is located within the southeast quadrant of the intersection of IL111 and Chain of Rocks Road.
- The Gateway Commerce Center and Gateway TradePort as mentioned earlier.

With current and future truck traffic taken into consideration, these design adjustments for heavily loaded vehicles were assumed:

- 2000 Trucks per day
- Trucks will run 364 days a year
- Fully loaded trucks will weigh 80,000 lbs.

Ramp C was used for the Ramp Pavement design. It was considered a one lane ramp.

The District is requesting this to be considered a Special Design. With the planned industrial parks and the existing trucking facility adjacent to this project's location, the District is proposing the rigid design with an aggregate subgrade improvement (reasons shown below) and is recommending the following pavement design for both the IL 111 mainline and the ramps to I-270:

- 11" JPC pavement with same depth PCC shoulders
- 4" Stabilized subbase
- 12" Aggregate Subgrade Improvement

The District proposes using an Aggregate Subgrade Improvement instead of Lime Modified Soil due to staged construction and the high volume of traffic through the construction area. The District also feels the aggregate subgrade would provide additional strength for the potential future development.

If you have any questions or comments, please contact Rob Harbaugh (618) 346-3195 or Tiffany Brase at (618) 346-3175.

Kirk H. Brown, P.E.
Program Development Engineer

RDH/S:\Squad_6\Pavement Design Reviews\04 - Madison County\IL 111 and I 270\Pavement Design (updated) to BDE for review.docx

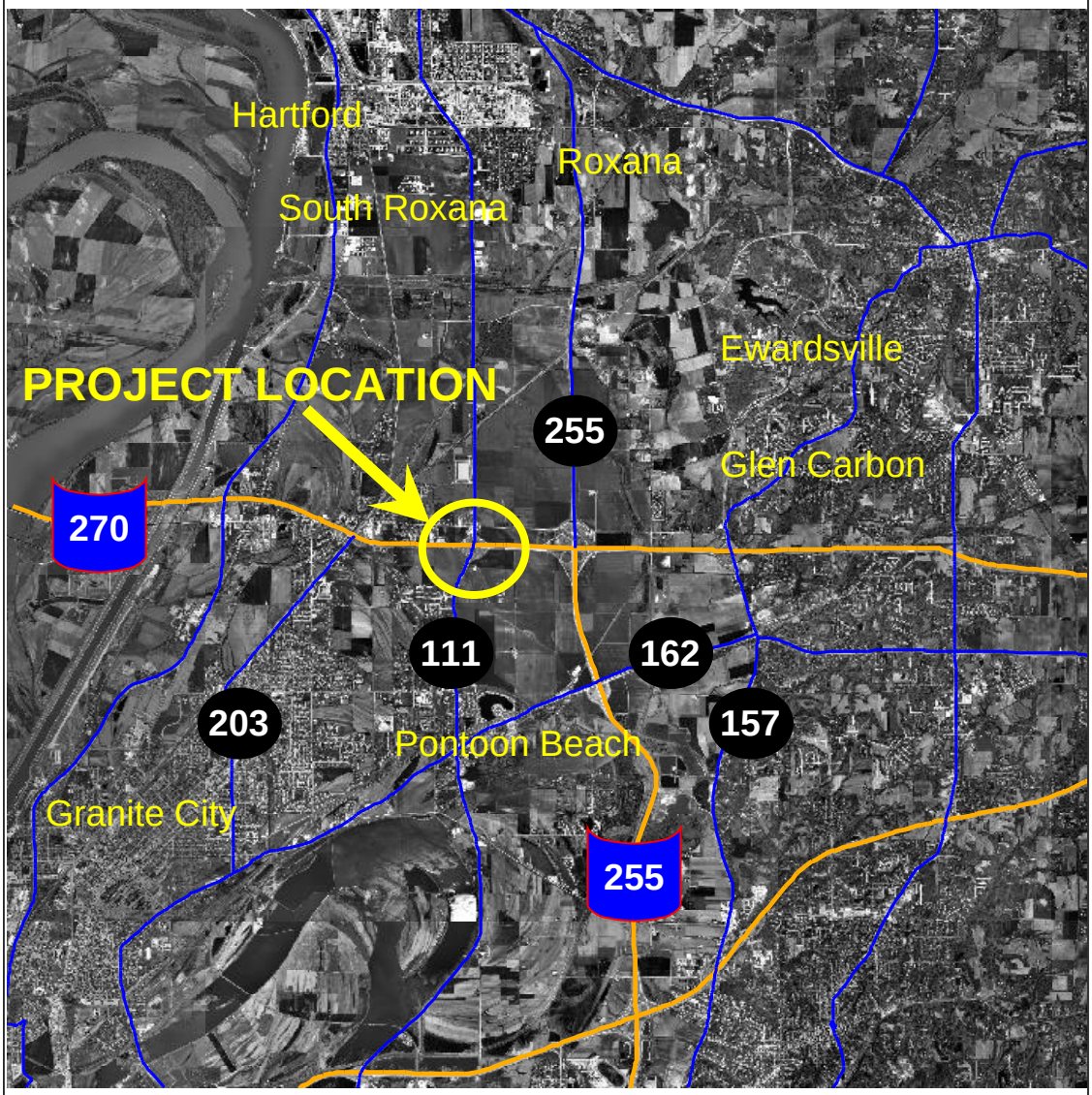


N
W E
S

Legend

Roadway
Interstate
US Route
State Route

# Project Location Map

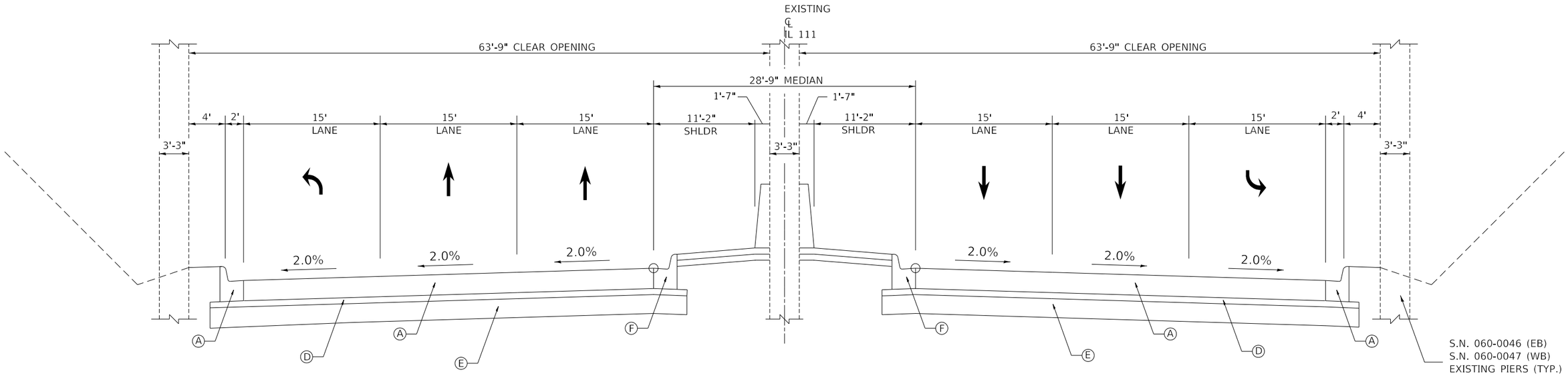


## PROPOSED TYPICAL SECTION

STA. 29+16.94 TO STA. 30+71.28

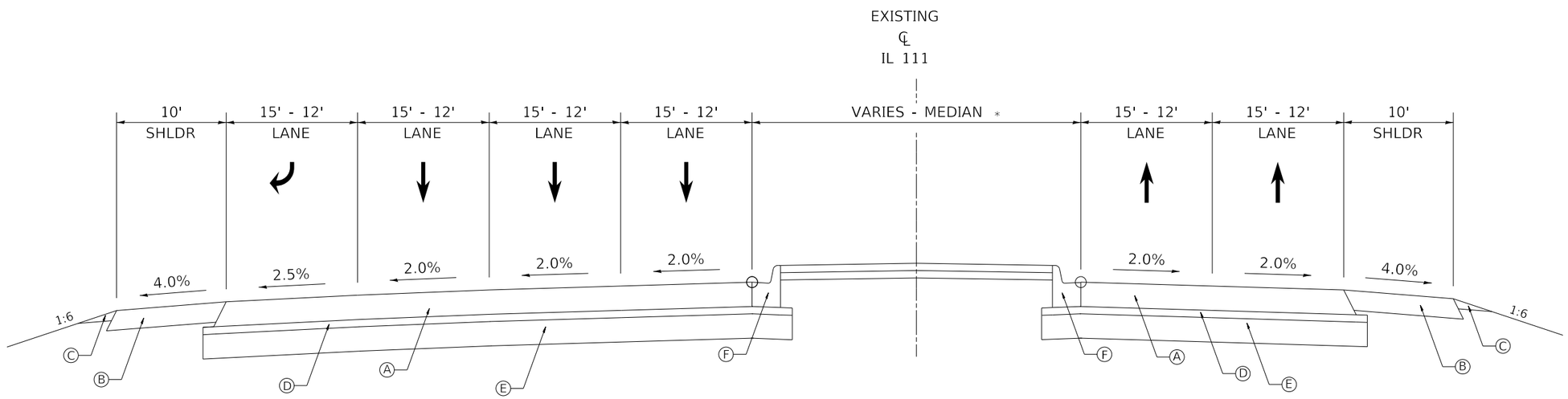


## LEGEND

- Ⓐ PROPOSED P.C.C. PAVEMENT, 11"
- Ⓑ PROPOSED P.C.C. SHOULDERS. 11"
- Ⓒ PROPOSED AGGREGATE SHOULDERS
- Ⓓ PROPOSED STABILIZED SUBBASE, 4"
- Ⓔ PROPOSED AGGREGATE SUBGRADE IMPROVEMENT, 12"
- Ⓕ PROPOSED CONCRETE CURB AND GUTTER

*FULL 30' MEDIAN OBTAINED AT STA. 40+85.17

## PROPOSED TYPICAL SECTION

STA. 36+25.64 TO STA. 41+25.19

OMISSION: STA. 33+25.49 TO STA. 36+25.64 (IL 111 & INTERSTATE RAMPS INTERSECTION)

MODEL: $MODELNAMES
FILE NAME: pw:\\planroom.dot.illinois.gov:PWIDOT\Documents\IDOT Offices\District 8\Projects\0876818\CADData\CADsheets\0876818-sht-typical.dgn

| | | | |
|---|---|---|---|
| USER NAME = dintelmanjn | DESIGNED - _____ | REVISED - _____ | |
| | DRAWN - _____ | REVISED - _____ | |
| PLOT SCALE = 100.0000 ' / in. | CHECKED - _____ | REVISED - _____ | |
| PLOT DATE = 7/15/2020 | DATE - _____ | REVISED - _____ | |

**STATE OF ILLINOIS**
**DEPARTMENT OF TRANSPORTATION**

**PROPOSED TYPICAL SECTIONS**
**IL 111**

SCALE: _____ SHEET __ OF __ SHEETS STA. _____ TO STA. _____

| F.A.I. RTE. | SECTION | COUNTY | TOTAL SHEETS | SHEET NO. |
|---|---|---|---|---|
| 270 | 60-3K-1 | MADISON | ___ | ___ |
| | | CONTRACT NO. 76818 | | |
| | | ILLINOIS | FED. AID PROJECT | |

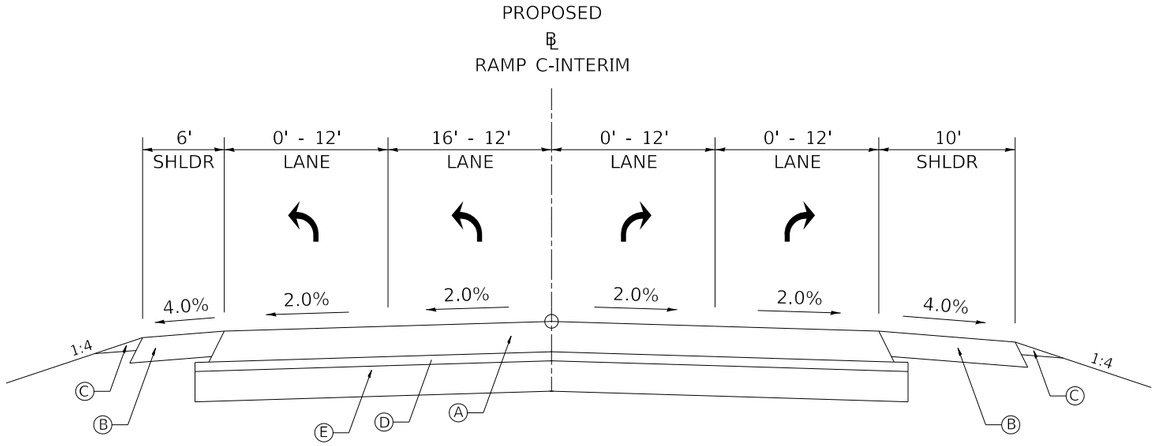


## PROPOSED TYPICAL SECTION RAMP C

STA. 3308+01.84 TO STA. 3314+24.85

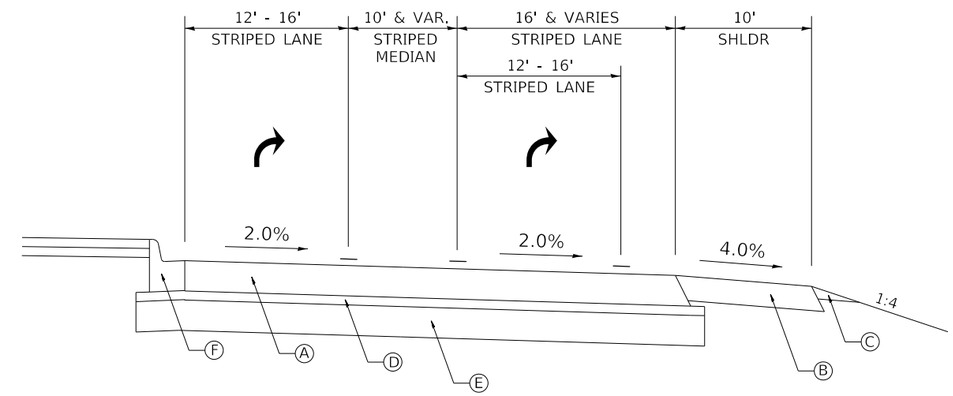


## PROPOSED TYPICAL SECTION RAMP C- DUAL RIGHT

STA. 0+00.00 TO 3+65.79

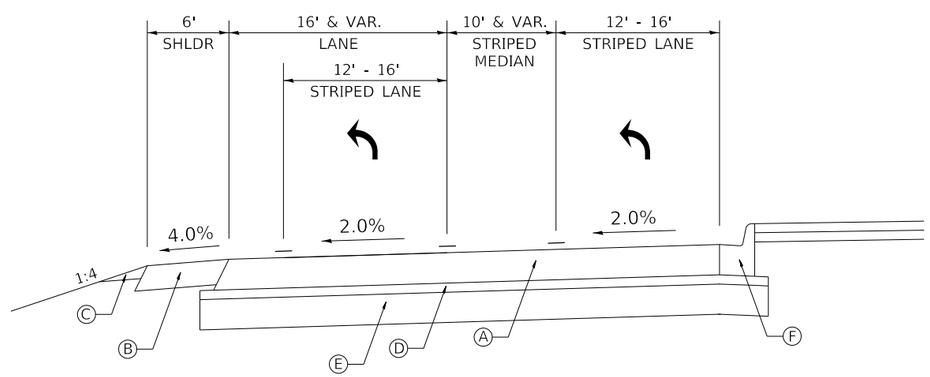


## PROPOSED TYPICAL SECTION RAMP C - DUAL LEFT

STA. 10+00.00 TO STA. 13+34.50

## LEGEND

- Ⓐ PROPOSED P.C.C. PAVEMENT, 11"
- Ⓑ PROPOSED P.C.C. SHOULDERS. 11"
- Ⓒ PROPOSED AGGREGATE SHOULDERS
- Ⓓ PROPOSED STABILIZED SUBBASE, 4"
- Ⓔ PROPOSED AGGREGATE SUBGRADE IMPROVEMENT, 12"
- Ⓕ PROPOSED CONCRETE CURB AND GUTTER

MODEL: $MODELNAME$
FILE NAME: pw:\\pbnroom.dot.illinois.gov:PWIDOT\Documents\IDOT Offices\District 8\Projects\D876818\CADData\CADsheets\D876818-sht-typical.dgn

| | | | |
|---|---|---|---|
| USER NAME = dintelmanjn | DESIGNED - _____ | REVISED - _____ | |
| | DRAWN - _____ | REVISED - _____ | |
| PLOT SCALE = 100.0000 ' / in. | CHECKED - _____ | REVISED - _____ | |
| PLOT DATE = 7/15/2020 | DATE - _____ | REVISED - _____ | |

**STATE OF ILLINOIS**
**DEPARTMENT OF TRANSPORTATION**

**PROPOSED TYPICAL SECTIONS**
**RAMP C**

SCALE: _____ SHEET __ OF __ SHEETS STA. _____ TO STA. _____

| F.A.I. RTE. | SECTION | COUNTY | TOTAL SHEETS | SHEET NO. |
|---|---|---|---|---|
| 270 | 60-3K-1 | MADISON | ___ | ___ |
| | | CONTRACT NO. 76818 | | |
| | ILLINOIS | FED. AID PROJECT | | |

BDE 5401 Template (Rev. 11/22/2019)

# IDOT MECHANISTIC PAVEMENT DESIGN

Printed: 06/29/2020

## PROJECT AND TRAFFIC INPUTS

(Enter Data in Gray Shaded Cells)

| | | | |
|---|---|---|---|
| Route: | FAP 582 | Comments: | Interchange Reconstruction |
| Section: | 60-3K-1 | | Heavy Load Traffic Factor |
| County: | Madison | Design Date: | <-- BY |
| Location: | Just S of I-270 to just N of Chain of Rcks | Modify Date: | <-- BY |
| Facility Type | Other Marked State Route | | |
| # of Lanes = | 4 | | |

| | ADT | Year |
|---|---|---|
| Current: | - | - |
| Future: | - | - |

| | | | | | |
|---|---|---|---|---|---|
| Road Class: | I | | Minimum ADT | Structural Design Traffic: Actual ADT | Actual %of Total ADT | % of ADT in Design Lane |
| | | PV = | 0 | | #DIV/0! | P = 32% |
| Subgrade Support Rating (SSR): | Poor | SU = | 250 | | #DIV/0! | S = 45% |
| Construction Year: | 2024 | MU = | 750 | | #DIV/0! | M = 45% |
| Design Period (DP) = | 20 years | Struct. Design ADT = | | 0 | (2034) | |

### TRAFFIC FACTOR CALCULATION

| FLEXIBLE PAVEMENT | | | RIGID PAVEMENT | | |
|---|---|---|---|---|---|
| Cpv = | - | | Cpv = | - | |
| Csu = | - | | Csu = | - | |
| Cmu = | - | | Cmu = | - | |
| TF flexible (Actual) = | - | (Actual ADT) | TF rigid (Actual) = | - | (Actual ADT) |
| TF flexible (Min) = | - | (Min ADT Fig. 54-2.C) | TF rigid (Min) = | - | (Min ADT Fig. 54-2.C) |

## NEW CONSTRUCTION / RECONSTRUCTION PAVEMENT DESIGN CALCULATIONS

### Full-Depth HMA Pavement

| | | |
|---|---|---|
| Use TF flexible = | 26.90 | |
| PG Grade Lower Binder Lifts = | PG 64-22 | (Fig. 53-4.O) |
| HMA Mixture Temp. = | 79.0 | deg. F (Fig. 54-5.C) |
| Design HMA Mixture Modulus ($E_{HMA}$) = | 580 | ksi (Fig. 54-5.D) |
| Design HMA Strain ($\varepsilon_{HMA}$) = | 47 | (Fig. 54-5.E) |
| Full Depth HMA Design Thickness = | 16.00 | in. (Fig. 54-5.F) |
| Limiting Strain Criterion Thickness = | 16.25 | in. (Fig. 54-5.I) |
| **Use Full-Depth HMA Thickness =** | **16.00** | **inches** |

Goto Map

Goto Map

### JPC Pavement

| | | |
|---|---|---|
| Use TF rigid = | 42.03 | |
| Edge Support = | Tied | Shoulder or C&G |
| **Rigid Pavt Thick. =** | **11.00** | **in. (Fig. 54-4.E)** |

### CRC Pavement

| | | |
|---|---|---|
| Use TF rigid = | 42.03 | |
| IBR value = | 3 | |
| **CRCP Thickness =** | **11.00** | **in. (Fig. 54-4.M)** |

**TF MUST BE > 60 FOR CRCP**

## RECONSTRUCTION ONLY (SUPPLEMENTAL) PAVEMENT DESIGN CALCULATIONS

### HMA Pavement Over Rubblized PCC

| | | |
|---|---|---|
| Use TF flexible = | 28.57 | |
| HMA Overlay Design Thickness = | 13.00 | in. (Fig. 54-5.U) |
| Limiting Strain Criterion Thickness = | 11.50 | in. (Fig. 54-5.V) |
| **Use HMA Overlay Thickness =** | **11.50** | **inches** |

Goto Map

### Unbonded Concrete Overlay

Review 54-4.03 for limitations and special considerations.

**JPCP Thickness = NA inches**

**CONTACT RESEARCH FOR ASSISTANCE**

## DESIGN TABLES FROM BDE MANUAL CHAPTER 54 - PAVEMENT DESIGN

| Class I Roads | Class II Roads | Class III Roads | Class IV Roads |
|---|---|---|---|
| 4 lanes or more<br>Part of a future 4 lanes or more<br>One-way Streets with ADT > 3500 | 2 lanes with ADT > 2000<br>One way Street with ADT <= 3500 | 2 Lanes<br>(ADT 750 -2000) | 2 Lanes<br>(ADT < 750) |

| | Min. Str. Design Traffic (Fig 54-2.C) | | |
|---|---|---|---|
| Facility Type | PV | SU | MU |
| Interstate or Freeway | 0 | 500 | 1500 |
| Other Marked State Route | 0 | 250 | 750 |
| Unmarked State Route | No Min | No Min | No Min |

| Class Table for One-Way Streets | |
|---|---|
| ADT | Class |
| 0 - 3500 | II |
| >3501 | I |

| | Traffic Factor ESAL Coefficients | | | |
|---|---|---|---|---|
| | Rigid (Fig. 54-4.C) | | Flexible (Fig. 54-5.B) | |
| Class | Csu | Cmu | Csu | Cmu |
| I | 143.81 | 696.42 | 132.50 | 482.53 |
| II | 135.78 | 567.21 | 112.06 | 385.44 |
| III | 129.58 | 562.47 | 109.14 | 384.35 |
| IV | 129.58 | 562.47 | 109.14 | 384.35 |

| Class Table for 2 or 3 lanes (not future 4 lane & not one-way street) | |
|---|---|
| ADT | Class |
| 0 - 749 | IV |
| 750 - 2000 | III |
| >2000 | II |

| | Design Lane Distribution Factors For Structural Design Traffic (Fig. 54-2.B) | | | | | |
|---|---|---|---|---|---|---|
| | Rural | | | Urban | | |
| Number of Lanes | P | S | M | P | S | M |
| 1 Lane Ramp | 100% | 100% | 100% | 100% | 100% | 100% |
| 2 or 3 | 50% | 50% | 50% | 50% | 50% | 50% |
| 4 | 32% | 45% | 45% | 32% | 45% | 45% |
| 6 or more | 20% | 40% | 40% | 8% | 37% | 37% |

# IDOT MECHANISTIC PAVEMENT DESIGN



## PROJECT AND TRAFFIC INPUTS

(Enter Data in Gray Shaded Cells)

| | | | |
|---|---|---|---|
| Route: | FAP 582 | Comments: | Interchange Reconstruction Ramps |
| Section: | 60-3K-1 | | Heavy Load Traffic Factor |
| County: | Madison | Design Date: | <-- BY |
| Location: | Just S of I-270 to just N of Chain of Rcks | Modify Date: | <-- BY |

| | ADT | Year |
|---|---|---|
| Current: | - | - |
| Future: | - | - |

Facility Type: Interstate or Freeway

** Ramp Design Fig. 54-1.B **

# of Lanes = 1 Lane Ramp

Crossroad? Unmarked State Route

# of Lanes = 4

Road Class: I

Subgrade Support Rating (SSR): Poor

Construction Year: 2024

Design Period (DP) = 20 years

| | Minimum ADT | Actual ADT | Actual %of Total ADT | % of ADT in Design Lane |
|---|---|---|---|---|
| PV = | 0 | | #DIV/0! | P = |
| SU = | 250 | | #DIV/0! | S = |
| MU = | 750 | | #DIV/0! | M = |

Structural Design Traffic

Struct. Design ADT = 0 (2034)

### TRAFFIC FACTOR CALCULATION

| FLEXIBLE PAVEMENT | | RAMP DESIGN MIN | |
|---|---|---|---|
| Cpv = | - | 0.15 | 50% |
| Csu = | - | 112.06 | 50% |
| Cmu = | - | 385.44 | 50% |
| TF flexible (Actual) = | - | (Actual ADT) | 3.17 |
| TF flexible (Min) = | - | (Min ADT Fig. 54-2.C) | |

| RIGID PAVEMENT | | RAMP DESIGN MIN | |
|---|---|---|---|
| Cpv = | - | 0.15 | 50% |
| Csu = | - | 135.78 | 50% |
| Cmu = | - | 567.21 | 50% |
| TF rigid (Actual) = | - | (Actual ADT) | 4.59 |
| TF rigid (Min) = | - | (Min ADT Fig. 54-2.C) | |

## NEW CONSTRUCTION / RECONSTRUCTION PAVEMENT DESIGN CALCULATIONS

### Full-Depth HMA Pavement

Goto Map

| | | |
|---|---|---|
| Use TF flexible = | 25.46 | |
| PG Grade Lower Binder Lifts = | PG 64-22 | (Fig. 53-4.O) |
| HMA Mixture Temp. = | 79.5 | deg. F (Fig. 54-5.C) |
| Design HMA Mixture Modulus ($E_{HMA}$) = | 570 | ksi (Fig. 54-5.D) |
| Design HMA Strain ($\varepsilon_{HMA}$) = | 48 | (Fig. 54-5.E) |
| Full Depth HMA Design Thickness = | 15.75 | in. (Fig. 54-5.F) |
| Limiting Strain Criterion Thickness = | 16.50 | in. (Fig. 54-5.I) |
| **Use Full-Depth HMA Thickness =** | **15.75** | **inches** |

Goto Map

### JPC Pavement

| | | |
|---|---|---|
| Use TF rigid = | 38.72 | |
| Edge Support = | Tied | Shoulder or C&G |
| **Rigid Pavt Thick. =** | **11.00** | **in. (Fig. 54-4.E)** |

### CRC Pavement

| | | |
|---|---|---|
| Use TF rigid = | 25.46 | |
| IBR value = | 3 | |
| **CRCP Thickness =** | **10.25** | **in. (Fig. 54-4.M)** |

**TF MUST BE > 60 FOR CRCP**

## RECONSTRUCTION ONLY (SUPPLEMENTAL) PAVEMENT DESIGN CALCULATIONS

### HMA Pavement Over Rubblized PCC

Goto Map

| | | |
|---|---|---|
| Use TF flexible = | | |
| HMA Overlay Design Thickness = | Off Chart | in. (Fig. 54-5.U) |
| Limiting Strain Criterion Thickness = | 11.50 | in. (Fig. 54-5.V) |
| **Use HMA Overlay Thickness =** | **999.00** | **inches** |

### Unbonded Concrete Overlay

Review 54-4.03 for limitations and special considerations.

**JPCP Thickness = NA inches**

**CONTACT RESEARCH FOR ASSISTANCE**

## DESIGN TABLES FROM BDE MANUAL CHAPTER 54 - PAVEMENT DESIGN

| Class I Roads | Class II Roads | Class III Roads | Class IV Roads |
|---|---|---|---|
| 4 lanes or more<br>Part of a future 4 lanes or more<br>One-way Streets with ADT > 3500 | 2 lanes with ADT > 2000<br>One way Street with ADT <= 3500 | 2 Lanes<br>(ADT 750 -2000) | 2 Lanes<br>(ADT < 750) |

| | Min. Str. Design Traffic (Fig 54-2.C) | | |
|---|---|---|---|
| Facility Type | PV | SU* | MU* |
| Interstate or Freeway | 0 | 500 | 1500 |
| Other Marked State Route | 0 | 250 | 750 |
| Unmarked State Route | 0 | 250 | 750 |

* Use marked route minimums for unmarked routes (Fig. 54-1.B)

| Class Table for One-Way Streets | |
|---|---|
| ADT | Class |
| 0 - 3500 | II |
| >3501 | I |

| | Traffic Factor ESAL Coefficients | | | |
|---|---|---|---|---|
| | Rigid (Fig. 54-4.C) | | Flexible (Fig. 54-5.B) | |
| Class | Csu | Cmu | Csu | Cmu |
| I | 143.81 | 696.42 | 132.50 | 482.53 |
| II | 135.78 | 567.21 | 112.06 | 385.44 |
| III | 129.58 | 562.47 | 109.14 | 384.35 |
| IV | 129.58 | 562.47 | 109.14 | 384.35 |

| Class Table for 2 or 3 lanes (not future 4 lane & not one-way street) | |
|---|---|
| ADT | Class |
| 0 - 749 | IV |
| 750 - 2000 | III |
| >2000 | II |

| | Design Lane Distribution Factors For Structural Design Traffic (Fig. 54-2.B) | | | | | |
|---|---|---|---|---|---|---|
| | Rural | | | Urban | | |
| Number of Lanes | P | S | M | P | S | M |
| 1 Lane Ramp | 100% | 100% | 100% | 100% | 100% | 100% |
| 2 or 3 | 50% | 50% | 50% | 50% | 50% | 50% |
| 4 | 32% | 45% | 45% | 32% | 45% | 45% |
| 6 or more | 20% | 40% | 40% | 8% | 37% | 37% |

# Traffic Factor for Heavily Loaded Vehicles

**IL 111**

| | |
|---|---|
| ASSUMED TRUCK WEIGHT (LOADED) = | 80000 |
| ASSUMED TRUCKS PER DAY = | 2000 |
| ASSUMED WORKING DAYS = | 364 |
| YEARS = | 20 |

**RIGID TF**

| | | | |
|---|---|---|---|
| ASSUMED WEIGHT PER AXLE (REG. TANDEM) = | 12,000 | 34,000 | 34,000 |
| LOAD FACTORS = | 0.18 | 1.92 | 1.92 |

EQUIVALENCY FACTOR = 0.18+1.92+1.92= 4.02

LANE DISTRIBUTION = 45% 200O TRUCKS * .45 = 900 TRUCKS

(900 *4.02*364 *20)/1,000,000 = **26.34**

**FLEXIBLE**

| | | | |
|---|---|---|---|
| ASSUMED WEIGHT PER AXLE (REG. TANDEM) = | 12,000 | 34,000 | 34,000 |
| LOAD FACTORS = | 0.19 | 1.09 | 1.09 |

EQUIVALENCY FACTOR = 0.19+1.09+1.09= 2.37

LANE DISTRIBUTION = 45% 200O TRUCKS * .45 = 900 TRUCKS

(900 *2.37*364 *20)/1,000,000 = **15.53**

**Ramps**

(USE RAMP C)

PERCENTAGE OF TRUCKS ON RAMP C *CALCULATED USING 1 LANE

Ramp A: 5100 ADT * 23.4% MU = 1193.4
Ramp B: 5300 ADT * 18.8% MU = 996.4
Ramp C: 5700 ADT * 23.5% MU = 1339.5
Ramp D: 4800 ADT * 26.%5 MU = 1272
TOTAL MU TRAFFIC = 4801
PERCENTAGE OF MU TRAFFIC ON RAMP C = 1333.5/4801 = 28%
PERCENTAGE OF 2000 HEAVY LOADED TRUCKS ON RAMP D = 2000 * .28 = 560

**RIGID TF**

(530 *4.02*364 *20)/1,000,000 = **16.39**

**FLEXIBLE**

(530 *2.37*364 *20)/1,000,000 = **9.66**

*USE EQUIVALANCY FACTORS CALCULATED ABOVE

Note: Traffic factors determined by using methodology described in
PAVEMENT TECHNOLOGY ADVISORY
DESIGNING FOR HEAVILY LOADED VEHICLES
PTA-D1

| | | | | | | | | | | | | | | | | | | | | | | | | | | |
|---|---|---|---|---|---|---|---|---|---|---|---|---|---|---|---|---|---|---|---|---|---|---|---|---|---|---|
| RIGID | Actual | $TF_{R(A)}$ = | **20** | x ( | 0.15 | x | P | x | PV | ) + ( | 143.81 | x | S | x | SU | ) + ( | 696.42 | x | M | x | MU | ) / ( | $1 \times 10^6$ | ) | Eq. 54-4.1 |
| | | $TF_{R(A)}$ = | 20 | x ( | 0.15 | x | 0.32 | x | **15460** | ) + ( | 143.81 | x | 0.45 | x | **1682** | ) + ( | 696.42 | x | 0.45 | x | **2153** | ) / ( | 1000000 | ) | |
| | | $TF_{R(A)}$ = | 20 | x ( | | | 742.08 | | | ) + ( | | | 108849.789 | | | ) + ( | | | 674726.517 | | | ) / ( | 1000000 | ) | |
| | | $TF_{R(A)}$ = | 20 | x ( | | | | | | | | | 784318.386 | | | | | | | | | ) / ( | 1000000 | ) | |
| | | $TF_{R(A)}$ = | | | | | | | | | | | 15686367.72 | | | | | | | | | / ( | 1000000 | ) | |
| | | $TF_{R(A)}$ = | | | | | | | | | | | 15.69 | | | | | | | | | | | | |
| | Equation 54-4.1 | | | | | | | | | | | | | | | | | | | | | | | | |
| | Minimum | $TF_{R(M)}$ = | 20 | x ( | 0.15 | x | P | x | PV | ) + ( | 143.81 | x | S | x | SU | ) + ( | 696.42 | x | M | x | MU | ) / ( | $1 \times 10^6$ | ) | |
| | | $TF_{R(M)}$ = | 20 | x ( | | x | | x | | ) + ( | 143.81 | x | 0.45 | x | 250 | ) + ( | 696.42 | x | 0.45 | x | 750 | ) / ( | 1000000 | ) | |
| | | $TF_{R(M)}$ = | 20 | x ( | | | 0 | | | ) + ( | | | 16178.625 | | | ) + ( | | | 235041.75 | | | ) / ( | 1000000 | ) | |
| | | $TF_{R(M)}$ = | 20 | x ( | | | | | | | | | 251220.375 | | | | | | | | | ) / ( | 1000000 | ) | |
| | | $TF_{R(M)}$ = | | | | | | | | | | | 5024407.5 | | | | | | | | | / ( | 1000000 | ) | |
| | | $TF_{R(M)}$ = | | | | | | | | | | | 5.02 | | | | | | | | | | | | |

| | | | | | | | | | | | | | | | | | | | | | | | | | | |
|---|---|---|---|---|---|---|---|---|---|---|---|---|---|---|---|---|---|---|---|---|---|---|---|---|---|---|
| FLEXIBLE | Actual | $TF_{F(A)}$ = | **20** | x ( | 0.15 | x | P | x | PV | ) + ( | 132.5 | x | S | x | SU | ) + ( | 482.53 | x | M | x | MU | ) / ( | $1 \times 10^6$ | ) | Eq. 54-5.1 |
| | | $TF_{F(A)}$ = | 20 | x ( | 0.15 | x | 0.32 | x | **15460** | ) + ( | 132.5 | x | 0.45 | x | **1682** | ) + ( | 482.53 | x | 0.45 | x | **2153** | ) / ( | 1000000 | ) | |
| | | $TF_{F(A)}$ = | 20 | x ( | | | 742.08 | | | ) + ( | | | 100289.25 | | | ) + ( | | | 467499.1905 | | | ) / ( | 1000000 | ) | |
| | | $TF_{F(A)}$ = | 20 | x ( | | | | | | | | | 568530.5205 | | | | | | | | | ) / ( | 1000000 | ) | |
| | | $TF_{F(A)}$ = | | | | | | | | | | | 11370610.41 | | | | | | | | | / ( | 1000000 | ) | |
| | | $TF_{F(A)}$ = | | | | | | | | | | | 11.37 | | | | | | | | | | | | |
| | Equation 54-5.1 | | | | | | | | | | | | | | | | | | | | | | | | |
| | Minimum | $TF_{F(M)}$ = | 20 | x ( | 0.15 | x | P | x | PV | ) + ( | 132.5 | x | S | x | SU | ) + ( | 482.53 | x | M | x | MU | ) / ( | $1 \times 10^6$ | ) | |
| | | $TF_{F(M)}$ = | 20 | x ( | | x | | x | | ) + ( | 132.5 | x | 0.45 | x | 250 | ) + ( | 482.53 | x | 0.45 | x | 750 | ) / ( | 1000000 | ) | |
| | | $TF_{F(M)}$ = | 20 | x ( | | | 0 | | | ) + ( | | | 14906.25 | | | ) + ( | | | 162853.875 | | | ) / ( | 1000000 | ) | |
| | | $TF_{F(M)}$ = | 20 | x ( | | | | | | | | | 177760.125 | | | | | | | | | ) / ( | 1000000 | ) | |
| | | $TF_{F(M)}$ = | | | | | | | | | | | 3555202.5 | | | | | | | | | / ( | 1000000 | ) | |
| | | $TF_{F(M)}$ = | | | | | | | | | | | 3.56 | | | | | | | | | | | | |

DP = design period – typically 20 years.
PV, SU, MU = structural design traffic expressed as the number of PV, SU, and MU vehicles.
P, S, M = percent of PV, SU, and MU in the design lane expressed as a decimal.

| Number of Facility Lanes | Percent of Total Vehicular Class Volume (ADT) in Design Lane | | | | | |
|---|---|---|---|---|---|---|
| | Rural | | | Urban | | |
| | PV | SU | MU | PV | SU | MU |
| 2 or 3* | 50% | 50% | 50% | 50% | 50% | 50% |
| 4 | 32% | 45% | 45% | 32% | 45% | 45% |
| ≥ 6 | 20% | 40% | 40% | 8% | 37% | 37% |

*One-way roads and streets.

DESIGN LANE DISTRIBUTION FACTORS FOR STRUCTURAL DESIGN TRAFFIC

Figure 54-2.B

| | | | | | | | | | | | | | | | | | | | | | | | | | | |
|---|---|---|---|---|---|---|---|---|---|---|---|---|---|---|---|---|---|---|---|---|---|---|---|---|---|---|
| RIGID | Actual | $TF_{R(A)}$ = | **20** | x ( | 0.15 | x | P | x | PV | ) + ( | 143.81 | x | S | x | SU | ) + ( | 696.42 | x | M | x | MU | ) / ( | $1 \times 10^6$ | ) | Eq. 54-4.1 |
| | | $TF_{R(A)}$ = | 20 | x ( | 0.15 | x | 1 | x | **3392** | ) + ( | 143.81 | x | 1 | x | **947** | ) + ( | 696.42 | x | 1 | x | **773** | ) / ( | 1000000 | ) | |
| | | $TF_{R(A)}$ = | 20 | x ( | | | 508.8 | | | ) + ( | | | 136188.07 | | | ) + ( | | | 538332.66 | | | ) / ( | 1000000 | ) | |
| | | $TF_{R(A)}$ = | 20 | x ( | | | | | | | | | 675029.53 | | | | | | | | | ) / ( | 1000000 | ) | |
| | | $TF_{R(A)}$ = | | | | | | | | | | | 13500590.6 | | | | | | | | | / ( | 1000000 | ) | |
| | | $TF_{R(A)}$ = | | | | | | | | | | | | | 13.50 | | | | | | | | | | |
| | Equation 54-4.1 | | | | | | | | | | | | | | | | | | | | | | | | |
| | Minimum | $TF_{R(M)}$ = | 20 | x ( | 0.15 | x | P | x | PV | ) + ( | 143.81 | x | S | x | SU | ) + ( | 696.42 | x | M | x | MU | ) / ( | $1 \times 10^6$ | ) | |
| | | $TF_{R(M)}$ = | 20 | x ( | | x | | x | | ) + ( | 143.81 | x | 1 | x | 500 | ) + ( | 696.42 | x | 1 | x | 1500 | ) / ( | 1000000 | ) | |
| | | $TF_{R(M)}$ = | 20 | x ( | | | 0 | | | ) + ( | | | 71905 | | | ) + ( | | | 1044630 | | | ) / ( | 1000000 | ) | |
| | | $TF_{R(M)}$ = | 20 | x ( | | | | | | | | | 1116535 | | | | | | | | | ) / ( | 1000000 | ) | |
| | | $TF_{R(M)}$ = | | | | | | | | | | | 22330700 | | | | | | | | | / ( | 1000000 | ) | |
| | | $TF_{R(M)}$ = | | | | | | | | | | | | | 22.33 | | | | | | | | | | |

| | | | | | | | | | | | | | | | | | | | | | | | | | | |
|---|---|---|---|---|---|---|---|---|---|---|---|---|---|---|---|---|---|---|---|---|---|---|---|---|---|---|
| FLEXIBLE | Actual | $TF_{F(A)}$ = | **20** | x ( | 0.15 | x | P | x | PV | ) + ( | 132.5 | x | S | x | SU | ) + ( | 482.53 | x | M | x | MU | ) / ( | $1 \times 10^6$ | ) | Eq. 54-5.1 |
| | | $TF_{F(A)}$ = | 20 | x ( | 0.15 | x | 1 | x | **3392** | ) + ( | 132.5 | x | 1 | x | **947** | ) + ( | 482.53 | x | 1 | x | **773** | ) / ( | 1000000 | ) | |
| | | $TF_{F(A)}$ = | 20 | x ( | | | 508.8 | | | ) + ( | | | 125477.5 | | | ) + ( | | | 372995.69 | | | ) / ( | 1000000 | ) | |
| | | $TF_{F(A)}$ = | 20 | x ( | | | | | | | | | 498981.99 | | | | | | | | | ) / ( | 1000000 | ) | |
| | | $TF_{F(A)}$ = | | | | | | | | | | | 9979639.8 | | | | | | | | | / ( | 1000000 | ) | |
| | | $TF_{F(A)}$ = | | | | | | | | | | | | | 9.98 | | | | | | | | | | |
| | Equation 54-5.1 | | | | | | | | | | | | | | | | | | | | | | | | |
| | Minimum | $TF_{F(M)}$ = | 20 | x ( | 0.15 | x | P | x | PV | ) + ( | 132.5 | x | S | x | SU | ) + ( | 482.53 | x | M | x | MU | ) / ( | $1 \times 10^6$ | ) | |
| | | $TF_{F(M)}$ = | 20 | x ( | | x | | x | | ) + ( | 132.5 | x | 1 | x | 500 | ) + ( | 482.53 | x | 1 | x | 1500 | ) / ( | 1000000 | ) | |
| | | $TF_{F(M)}$ = | 20 | x ( | | | 0 | | | ) + ( | | | 66250 | | | ) + ( | | | 723795 | | | ) / ( | 1000000 | ) | |
| | | $TF_{F(M)}$ = | 20 | x ( | | | | | | | | | 790045 | | | | | | | | | ) / ( | 1000000 | ) | |
| | | $TF_{F(M)}$ = | | | | | | | | | | | 15800900 | | | | | | | | | / ( | 1000000 | ) | |
| | | $TF_{F(M)}$ = | | | | | | | | | | | | | 15.80 | | | | | | | | | | |

DP = design period – typically 20 years.
PV, SU, MU = structural design traffic expressed as the number of PV, SU, and MU vehicles.
P, S, M = percent of PV, SU, and MU in the design lane expressed as a decimal.

| Number of Facility Lanes | Percent of Total Vehicular Class Volume (ADT) in Design Lane | | | | | |
|---|---|---|---|---|---|---|
| | Rural | | | Urban | | |
| | PV | SU | MU | PV | SU | MU |
| 2 or 3* | 50% | 50% | 50% | 50% | 50% | 50% |
| 4 | 32% | 45% | 45% | 32% | 45% | 45% |
| ≥ 6 | 20% | 40% | 40% | 8% | 37% | 37% |

*One-way roads and streets.

DESIGN LANE DISTRIBUTION FACTORS FOR STRUCTURAL DESIGN TRAFFIC

Figure 54-2.B