Illinois Department of Transportation

To:	Anthony J. Quigley	Attn:	John Baczek
From:	Jack A. Elston	By:	Michael Brand MDB
Subject:	Pavement Design Approval		
Date:	July 3, 2019		

Route:	IL 176	Job No.:	D-91-294-18
Section:	(119&105)C&W-1	Contract No.:	62G35
County:	McHenry	Target Letting:	June 2020
Limits:	Deerpass Road to Dean Street		

We have reviewed the pavement design for the above referenced project which was submitted on June 20, 2019. The scope of the project involves widening and resurfacing segments of IL 176 to provide left turn lanes at eight signalized intersections between Deerpass Road and Dean Street.

The design explored several widening options and analyzed them based upon first costs which resulted in a mechanistic Full-Depth HMA pavement being the preferred option.

In summary, the approved pavement design is as follows:

<u>IL 176 Widening & Resurfacing</u>
9.75" Full-Depth HMA
12" Agg. Subgrade Improvement

If you have any questions, please contact Michael Brand at (217) 782-7651.

Illinois Department of Transportation

Memorandum

To: Jack Elston | Attn: Michael Brand

From: Jose A. Dominguez | By: Kari Smith/Ojas Patel

Subject: Pavement Analysis*

Date: June 20, 2019

*Route: Illinois Route 176
Limits: Deerpass Rd. to Dean St.
Section: (119&105)C&W-1
Current target: 06CY20

County: McHenry
Contract No.: 62G35
Job No.: D-91-294-18

We have completed the pavement analysis for the above captioned location. Review by the Central Office is required since the total pavement area for reconstruction exceeds 4,750 Square Yards. The following is the scope of the project:

Widening and resurfacing of segments of IL 176 to provide left turn lanes at eight unsignalized intersections between Deerpass Road and Dean Street.

A 20-year pavement analysis was performed on the above segments. Our recommendations are as follows based on the mechanistic flexible pavement design procedure using a first cost analysis.

IL 176

Pavement Widening & Resurfacing[5]
HMA Shoulder
- 9 ¾" Full Depth HMA
  - 1 ½" HMA Surface Course, Mix "D", N70[1]
  - 1" Polymerized HMA Binder Course, IL-4.75, N50[2]
  - 7 ¼" HMA Binder Course, IL-19.0, N70[3]
- 12" Aggregate Subgrade Improvement[4]

Pavement Resurfacing[5]
- Cold Milling of Existing HMA Pavement
- 2 ½" Minimum (more if necessary)
- 1 ½" HMA Surface Course, Mix "D", N70[1]
- 1" Polymerized HMA Binder Course, IL-4.75, N50[2]

[1]Designer Note 1: Use pay item **40604062, HMA SURFACE COURSE, MIX D, IL-9.5, N70** paid for in tons.

[2]Designer Note 2: Use pay item **40603200**, **POLYMERIZED HMA BINDER COURSE, IL-4.75, N50** paid for in tons.

[3]Designer Note 3: For widening of six feet or less use pay item **35600705 HOT-MIX ASPHALT BASE COURSE WIDENING, 7 ¼"** paid for in square yards. For widening of greater than six feet use pay item **35501313 HOT-MIX ASPHALT BASE COURSE, 7 ¼"** paid for in square yards.

[4]Designer Note 4: Use pay item **30300112, AGGREGATE SUBGRADE IMPROVEMENT, 12"**, paid in square yards.

[5]Designer Note 5: Refer to the District One, Bureau of Materials' "Hot-Mix Asphalt – Mix Selection" tables to determine the corresponding HMA mix table requirements for the plans.

If you have any questions or need additional information, please contact Ojas Patel, Pavement Design Engineer, at (847)705-4550.

By: Jose A. Dominguez
Jose A. Dominguez, P.E.
Project Support Engineer

LOCATION MAP

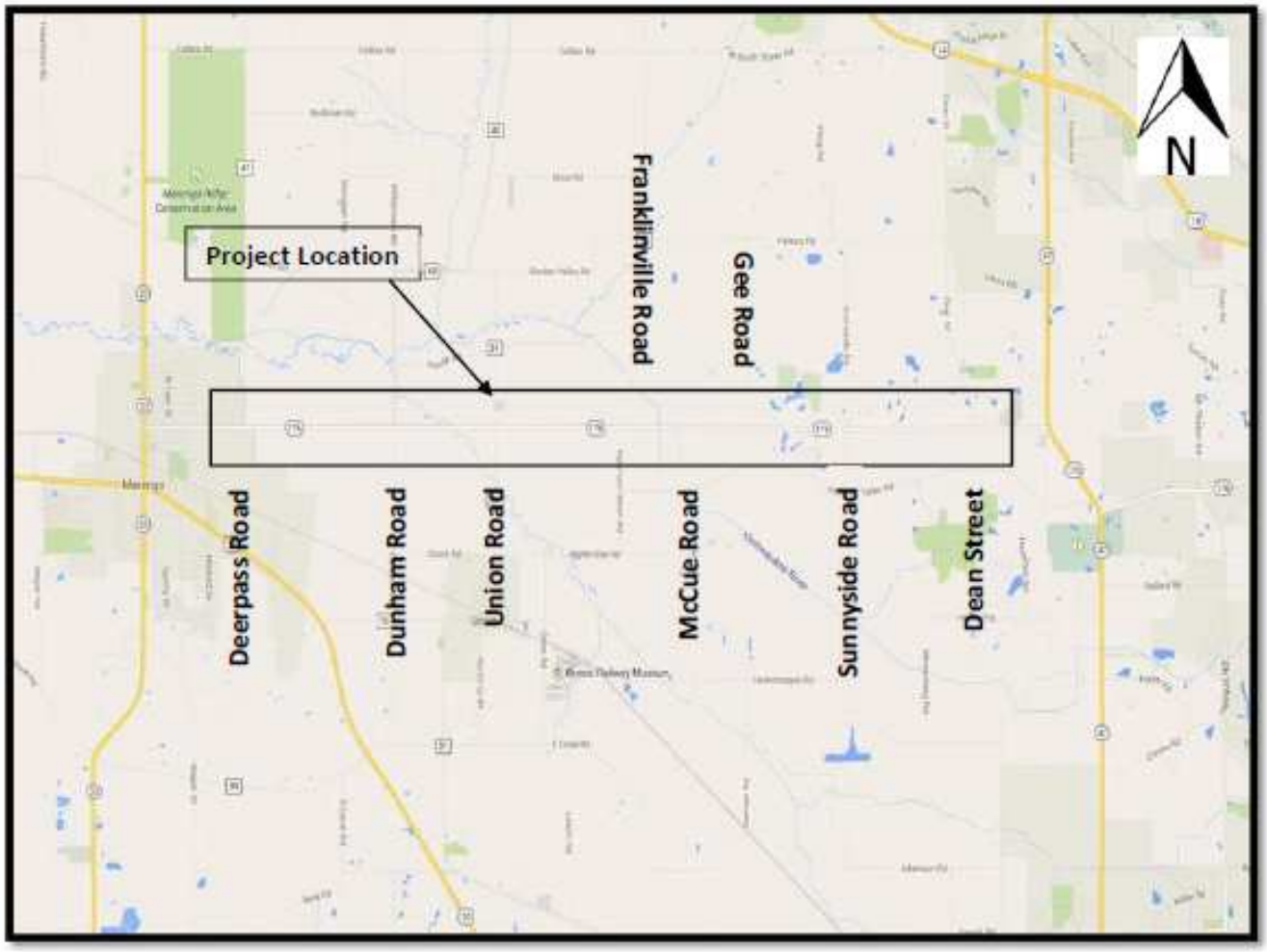

Contract No.: 62G35
FAP 533 (IL Route 176) from Deerpass Road to Dean Street
Roadway Widening and Channelization, Drainage and Structural Improvements
Marengo, McHenry County

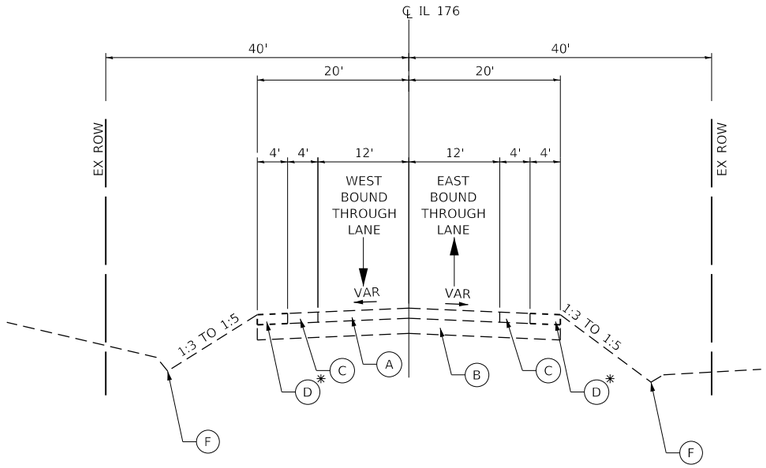

EXISTING IL 176 TYPICAL SECTION

STA 1003+67 TO STA 1331+10.50
STA 1338+46 TO STA 1402+35

✳ EX AGGREGATE SHOULDER:

NORTH SHOULDER EXPANDS TO 5' FROM STA 1013+70 TO STA 1034+00

SOUTH SHOULDER EXPANDS TO 6' FROM STA 1014+82 TO STA 1025+00

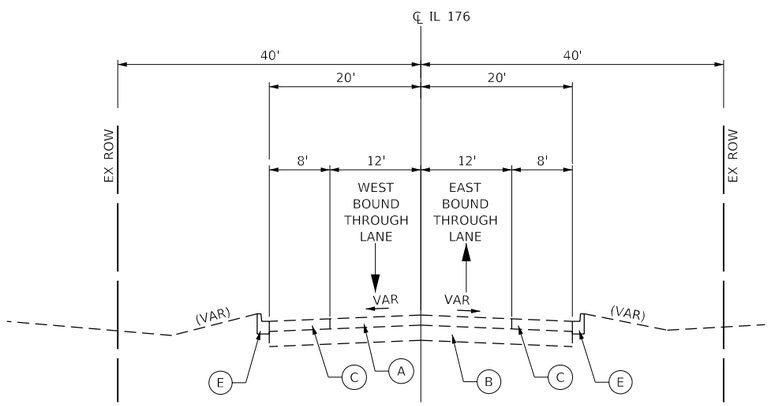

EXISTING IL 176 TYPICAL SECTION – CURBED SECTION

STA 1331+10.50 TO STA 1338+46

EXISTING LEGEND

- Ⓐ EXISTING HMA PAVEMENT, VARIES 6" (±)
- Ⓑ EXISTING PCC PAVEMENT, 8" (±)
- Ⓒ EXISTING HMA SHOULDER
- Ⓓ EXISTING AGGREGATE SHOULDER
- Ⓔ EXISTING COMBINATION CONCRETE CURB AND GUTTER, TYPE M-6.12 (TYP)
- Ⓕ EXISTING DRAINAGE DITCH (VARIES)

MODEL: Default
FILE NAME: Q:\Engineering\Active Projects\13045_IDOT_IL 176\CADD\CADD Sheets\Civil\D162G35-sht-Typ Sect 1 - PVMT DES.dgn

Accurate GROUP, INC.	USER NAME = lchrzasc	DESIGNED - LRC	REVISED -	STATE OF ILLINOIS DEPARTMENT OF TRANSPORTATION	TYPICAL SECTIONS – I IL 176 (TELEGRAPH ST) (DEERPASS RD TO DEAN ST)	F.A.P. RTE.	SECTION	COUNTY	TOTAL SHEETS / SHEET NO.
		DRAWN - LRC	REVISED -			533	(119&105)C&W-1	McHENRY	
	PLOT SCALE = 20.0000 ' / in.	CHECKED - JN	REVISED -					CONTRACT NO. 62G35	
	PLOT DATE = 5/1/2019	DATE - 10-07-2019	REVISED -		SCALE: SHEET OF SHEETS STA. TO STA.		ILLINOIS	FED. AID PROJECT	

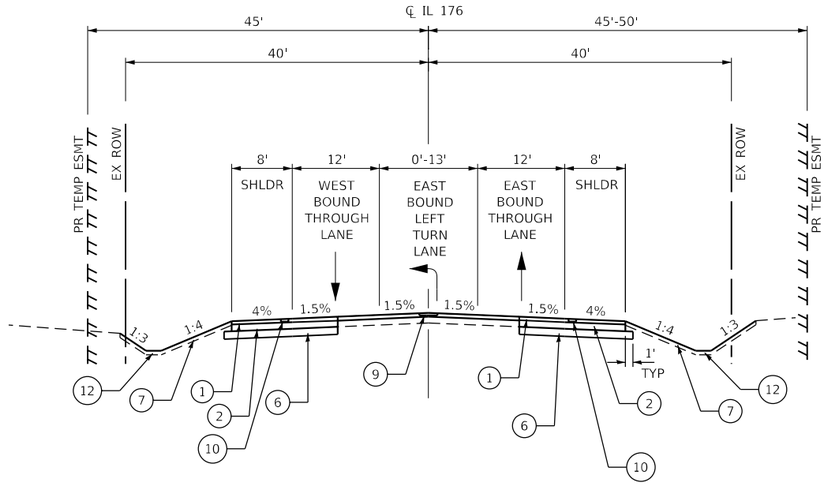

PROPOSED IL 176 WIDENING TYPICAL SECTION – EASTBOUND LEFT TURN CHANNELIZATION

STA 1003+67 TO STA 1009+55

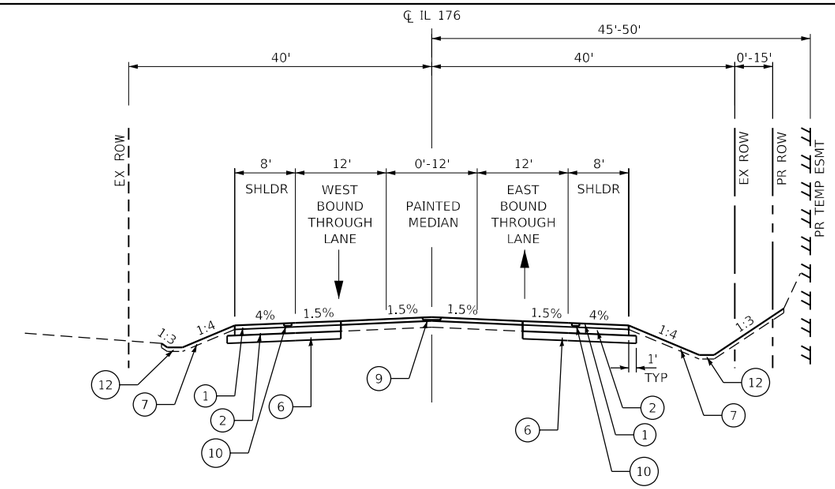

PROPOSED IL 176 WIDENING TYPICAL SECTION – PAINTED MEDIAN

STA 1233+50 TO STA 1237+37

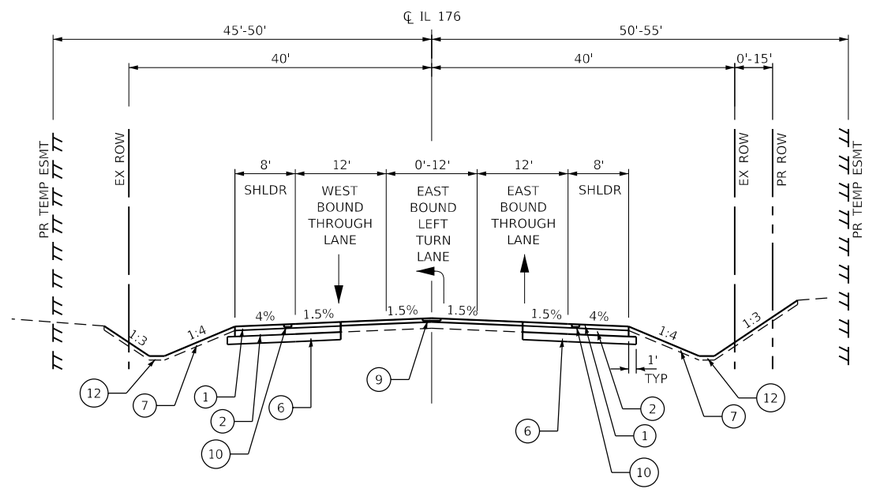

PROPOSED IL 176 WIDENING TYPICAL SECTION – EASTBOUND LEFT TURN CHANNELIZATION

STA 1082+30 TO STA 1088+50
STA 1135+05 TO STA 1141+25
STA 1214+05 TO STA 1220+25
STA 1267+30 TO STA 1273+50
STA 1320+35 TO STA 1326+55
STA 1388+40 TO STA 1395+40

PROPOSED LEGEND

1. PROPOSED HOT-MIX ASPHALT SURFACE COURSE
2. PROPOSED HOT-MIX ASPHALT BINDER COURSE
3. PROPOSED HOT-MIX ASPHALT SURFACE COURSE
4. PROPOSED LEVELING BINDER (MACHINE METHOD)
5. PROPOSED COMBINATION CONCRETE CURB AND GUTTER
6. PROPOSED AGGREGATE SUBGRADE IMPROVEMENT
7. PROPOSED TOPSOIL FURNISH & PLACE, 4" & SEEDING, CLASS 2A OR SEEDING, CLASS 4
8. PROPOSED STEEL PLATE BEAM GUARDRAIL, TYPE A, 6 FOOT POSTS
9. PROPOSED CENTERLINE RUMBLE STRIPS, 16"
10. PROPOSED SHOULDER RUMBLE STRIPS, 8"
11. PROPOSED TEMPORARY PAVMENT
12. PROPOSED 2' DRAINAGE DITCH (VARIES)

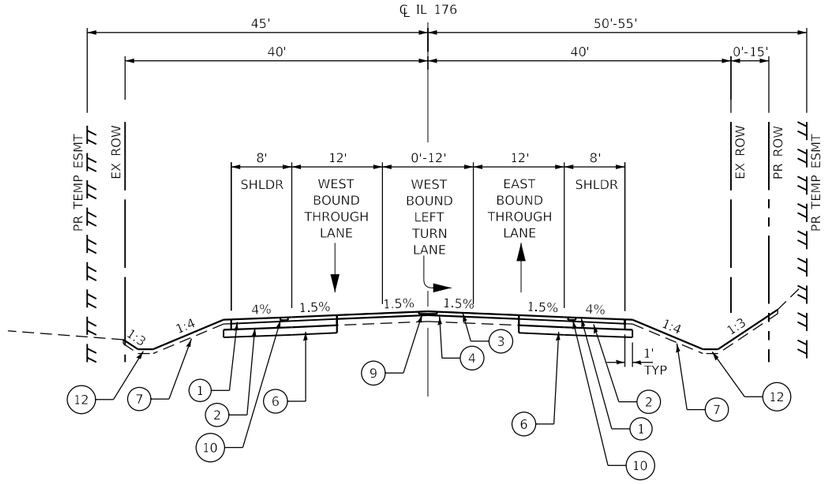

PROPOSED IL 176 WIDENING TYPICAL SECTION – WESTBOUND LEFT TURN CHANNELIZATION

STA 1089+25 TO STA 1095+45
STA 1142+00 TO STA 1148+15
STA 1237+85 TO STA 1244+50
STA 1327+15 TO STA 1333+35
STA 1396+15 TO STA 1402+35

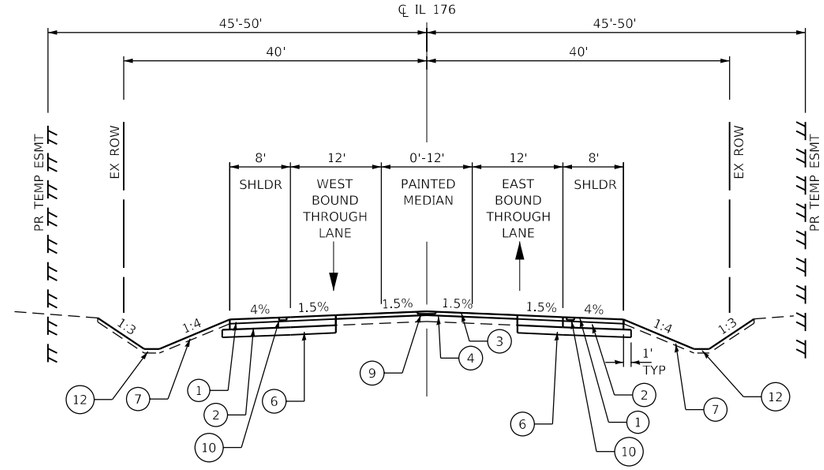

PROPOSED IL 176 WIDENING TYPICAL SECTION – PAINTED MEDIAN

STA 1220+98 TO STA 1224+90
STA 1274+98 TO STA 1277+50

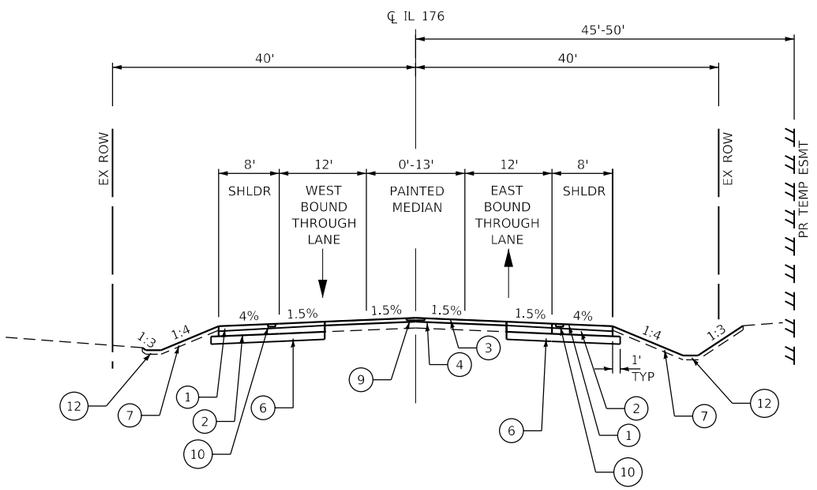

PROPOSED IL 176 WIDENING TYPICAL SECTION – PAINTED MEDIAN

STA 1010+23 TO STA 1014+50

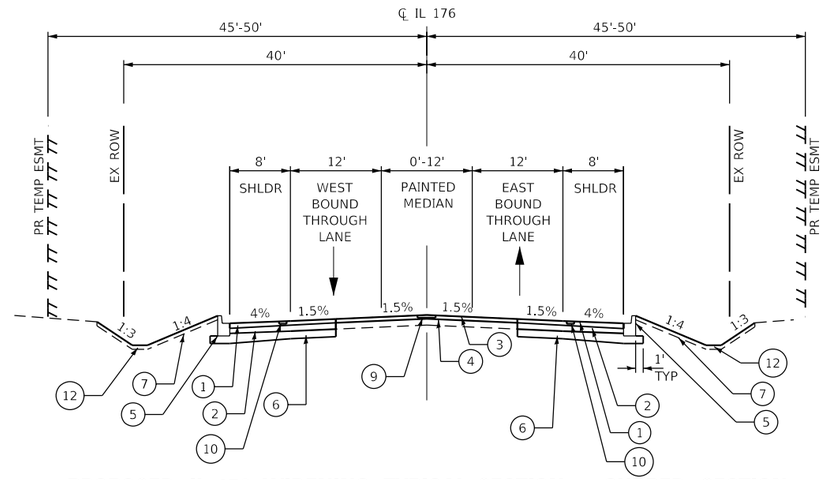

PROPOSED IL 176 WIDENING TYPICAL SECTION – CURBED SECTION

STA 1331+10.50 TO STA 1338+46

PROPOSED LEGEND

1. PROPOSED HOT-MIX ASPHALT SURFACE COURSE
2. PROPOSED HOT-MIX ASPHALT BINDER COURSE
3. PROPOSED HOT-MIX ASPHALT SURFACE COURSE
4. PROPOSED LEVELING BINDER (MACHINE METHOD)
5. PROPOSED COMBINATION CONCRETE CURB AND GUTTER
6. PROPOSED AGGREGATE SUBGRADE IMPROVEMENT
7. PROPOSED TOPSOIL FURNISH & PLACE, 4" & SEEDING, CLASS 2A OR SEEDING, CLASS 4
8. PROPOSED STEEL PLATE BEAM GUARDRAIL, TYPE A, 6 FOOT POSTS
9. PROPOSED CENTERLINE RUMBLE STRIPS, 16"
10. PROPOSED SHOULDER RUMBLE STRIPS, 8"
11. PROPOSED TEMPORARY PAVEMENT
12. PROPOSED 2' DRAINAGE DITCH (VARIES)

BDE 5401 Template (Rev. 09/05/2013)

IDOT MECHANISTIC PAVEMENT DESIGN

Printed: 07/08/2019

PROJECT AND TRAFFIC INPUTS

(Enter Data in Gray Shaded Cells)

Route:	IL 176	Comments:	IL 176 (Deerpass Rd to Dean Street)
Section:			8 locations
County:	McHenry	Design Date:	06/13/2019 ONP
Location:		Modify Date:	

			<-- BY
			<-- BY
	ADT	Year	
Current:	11,000	2016	
Future:	13,500	2040	

Facility Type: Other Marked State Route

# of Lanes =	2 or 3
Part of future 4 lanes or more ?	No
One Way Street ?	No
Road Class:	II
Subgrade Support Rating (SSR):	Poor
Construction Year:	2020
Design Period (DP) =	20 years

	Minimum ADT	Actual ADT	Actual %of Total ADT	% of ADT in Design Lane
		Structural Design Traffic		
PV =	0	11,051	88.7%	P = 50%
SU =	250	785	6.3%	S = 50%
MU =	750	623	5.0%	M = 50%
Struct. Design ADT =		12,458	(2030)	

TRAFFIC FACTOR CALCULATION

FLEXIBLE PAVEMENT			RIGID PAVEMENT		
Cpv =	0.15		Cpv =	0.15	
Csu =	112.06		Csu =	135.78	
Cmu =	385.44		Cmu =	567.21	
TF flexible (Actual) =	3.30	(Actual ADT)	TF rigid (Actual) =	4.62	(Actual ADT)
TF flexible (Min) =	3.17	(Min ADT Fig. 54-2.C)	TF rigid (Min) =	4.59	(Min ADT Fig. 54-2.C)

NEW CONSTRUCTION / RECONSTRUCTION PAVEMENT DESIGN CALCULATIONS

Full-Depth HMA Pavement

Use TF flexible =	3.30	
PG Grade Lower Binder Lifts =	PG 64-22	(Fig. 53-4.R)
HMA Mixture Temp. =	73.5	deg. F (Fig. 54-5.C)
Design HMA Mixture Modulus (E_{HMA}) =	740	ksi (Fig. 54-5.D)
Design HMA Strain (ε_{HMA}) =	86	(Fig. 54-5.E)
Full Depth HMA Design Thickness =	9.75	in. (Fig. 54-5.F)
Limiting Strain Criterion Thickness =	14.25	in. (Fig. 54-5.I)
Use Full-Depth HMA Thickness =	**9.75**	**inches**

Goto Map

Goto Map

JPC Pavement

Use TF rigid =	4.62	
Edge Support =	Tied	Shoulder or C.&G.
Rigid Pavt Thick. =	**9.00**	**in. (Fig. 54-4.E)**

CRC Pavement

Use TF rigid =	4.62	
IBR value =	3	
CRCP Thickness =	**7.75**	**in. (Fig. 54-4.N)**

TF MUST BE > 60 FOR CRCP

RECONSTRUCTION ONLY (SUPPLEMENTAL) PAVEMENT DESIGN CALCULATIONS

HMA Overlay of Rubblized PCC

Use TF flexible =	3.30	
HMA Overlay Design Thickness =	7.25	in. (Fig. 54-5.U)
Limiting Strain Criterion Thickness =		in. (Fig. 54-5.V)
Use HMA Overlay Thickness =	**999.00**	**inches**

Goto Map

Unbonded Concrete Overlay

Review 54-4.03 for limitations and special considerations.

JPCP Thickness = NA inches

CONTACT BMPR FOR ASSISTANCE

DESIGN TABLES FROM BDE MANUAL CHAPTER 54 - PAVEMENT DESIGN

Class I Roads	Class II Roads	Class III Roads	Class IV Roads
4 lanes or more Part of a future 4 lanes or more One-way Streets with ADT > 3500	2 lanes with ADT > 2000 One way Street with ADT <= 3500	2 Lanes (ADT 750 -2000)	2 Lanes (ADT < 750)

Facility Type	Min. Str. Design Traffic (Fig 54-2.C) PV	SU	MU
Interstate or Freeway	0	500	1500
Other Marked State Route	0	250	750
Unmarked State Route	No Min	No Min	No Min

Class Table for One-Way Streets ADT	Class
0 - 3500	II
>3501	I

Class	Traffic Factor ESAL Coefficients: Rigid (Fig. 54-4.C) Csu	Rigid Cmu	Flexible (Fig. 54-5.B) Csu	Flexible Cmu
I	143.81	696.42	132.50	482.53
II	135.78	567.21	112.06	385.44
III	129.58	562.47	109.14	384.35
IV	129.58	562.47	109.14	384.35

Class Table for 2 or 3 lanes (not future 4 lane & not one-way street) ADT	Class
0 - 749	IV
750 - 2000	III
>2000	II

Number of Lanes	Design Lane Distribution Factors For Structural Design Traffic (Fig. 54-2.B): Rural P	Rural S	Rural M	Urban P	Urban S	Urban M
1 Lane Ramp	100%	100%	100%	100%	100%	100%
2 or 3	50%	50%	50%	50%	50%	50%
4	32%	45%	45%	32%	45%	45%
6 or more	20%	40%	40%	8%	37%	37%

BDE 5401 Template (Rev. 09/05/2013) Printed: 07/08/2019

LIFE-CYCLE COST ANALYSIS: NEW CONSTRUCTION / RECONSTRUCTION

FULL-DEPTH HMA PAVEMENT

Standard Design

ROUTE	Job Route
SECTION	Job Section
COUNTY	Job County
LOCATION	Job Location
FACILITY TYPE	INTERSTATE

PROJECT LENGTH		1000 FT	= = >	0.19 Miles
# OF CENTERLINES		2 CL		
# OF LANES		4 LANES		
# OF EDGES		4 EP		
LANE WIDTH - AVERAGE		12 FT		
SHOULDER WIDTH	HMA Inside	6 FT		
	HMA Outside	10 FT		
	Total Width of Paved Shoulders	32 FT		

PAVEMENT THICKNESS (FLEXIBLE)	12.00 IN	17.00 IN MAX
SHOULDER THICKNESS	8.00 IN	HMA SD Standard Design
POLICY OVERLAY THICKNESS	3.75 IN	

FLEX PAVEMENT TRAFFIC FACTORS	MINIMUM	ACTUAL	USE
	7.11	1.00	7.11

Read Me!

HMA COST PER TON	UNIT PRICE
HMA SURFACE	$95.00 / TON
HMA TOP BINDER	$95.00 / TON
HMA LOWER BINDER	$80.00 / TON
HMA BINDER (LEVELING)	$85.00 / TON
HMA SHOULDER	$72.00 / TON

INITIAL COSTS

ITEM	THICKNESS	100% QUANTITY	UNIT	UNIT PRICE		COST
HMA PAVEMENT (FULL-DEPTH)	(12.00")	5,333	SQ YD	$59.62	/ SQ YD	$317,988
HMA SURFACE COURSE	(2.00")	601	TONS	$95.00	/ TON	$0
HMA TOP BINDER COURSE	(2.25")	687	TONS	$95.00	/ TON	$0
HMA LOWER BINDER COURSE	(7.75")	2,445	TONS	$80.00	/ TON	$0
HMA SHOULDER	(8.00")	1,593	TONS	$72.00	/ TON	$114,688
CURB & GUTTER		0	LIN FT	$30.00	/ LIN FT	$0
SUBBASE GRAN MATL TY C (TONS)		499	TONS	$25.00	/ TON	$12,475
IMPROVED SUBGRADE:	Aggregate	9,556	SQ YD	$7.00	/ SQ YD	$66,892
Reserved For User Supplied Item		0	UNITS	$0.00	/ UNITS	$0
Reserved For User Supplied Item		0	UNITS	$0.00	/ UNITS	$0
PAVEMENT REMOVAL		5,333	SQ YD	$0.00	/ SQ YD	$0
SHOULDER REMOVAL		3,556	SQ YD	$0.00	/ SQ YD	$0

Note: * Denotes User Supplied Quantity

FLEXIBLE CONSTRUCTION INITIAL COST	$512,043
FLEXIBLE CONSTRUCTION ANNUAL COST PER MILE	$110,266

MAINTENANCE COSTS:

ITEM	THICKNESS	MATERIAL	UNIT COST	
ROUTINE MAINTENANCE ACTIVITY			$0.00	LANE-MILE / YEAR
HMA OVERLAY PVMT SURF	(2.00")	Surface Mix	$10.71	/ SQ YD
HMA OVERLAY PVMT	(3.75")		$20.21	/ SQ YD
HMA SURFACE MIX	(1.50")	Surface Mix	$8.02	/ SQ YD
HMA BINDER MIX	(2.25")	Top Binder Mix	$12.19	/ SQ YD
HMA OVERLAY SHLD (Year 30)	(1.75")	Shoulder Mix	$7.06	/ SQ YD
HMA OVERLAY SHLD	(2.00")	Shoulder Mix	$8.06	/ SQ YD
MILLING (2.00 IN)			$3.00	/ SQ YD
PARTIAL DEPTH PVMT PATCH	(Mill & Fill Surf)	Surface Mix	$80.64	/ SQ YD
PARTIAL DEPTH SHLD PATCH	(Mill & Fill Surf)	Shoulder Mix	$78.06	/ SQ YD
PARTIAL DEPTH PVMT PATCH	(Mill & Fill +2.00")	Leveling Binder Mix	$79.52	/ SQ YD
PARTIAL DEPTH SHLD PATCH	(Mill & Fill +2.00")	Shoulder Mix	$78.06	/ SQ YD
LONGITUDINAL SHOULDER JOINT ROUT & SEAL			$2.00	/ LIN FT
CENTERLINE JOINT ROUT & SEAL			$2.00	/ LIN FT
RANDOM / THERMAL CRACK ROUT & SEAL	(100% Rehab = 110.00' / Station / Lane)		$2.00	/ LIN FT

FLEXIBLE TOTAL LIFE-CYCLE COST	$711,101
FLEXIBLE TOTAL ANNUAL COST PER MILE	$153,133

FULL-DEPTH HMA PAVEMENT
HMA OVERLAY OF RUBBLIZED PCC PAVEMENT
Figure 54-7.C
STANDARD DESIGN

MAINTENANCE COSTS:	ITEM	%	QUANTITY	UNIT	UNIT COST		COST	PRESENT WORTH
YEAR 5								
	LONG SHLD JT R&S	100.00%	4,000	LIN FT	$2.00		$8,000	
	CNTR LINE JOINT R&S	100.00%	2,000	LIN FT	$2.00		$4,000	
	RNDM / THRM CRACK R&S	50.00%	2,200	LIN FT	$2.00		$4,400	
	PD PVMT PATCH M&F SURF	0.10%	5	SQ YD	$80.64		$403	
	PWFn =	0.8626		PW =	0.8626	X	$16,803	$14,494
YEAR 10								
	LONG SHLD JT R&S	100.00%	4,000	LIN FT	$2.00		$8,000	
	CNTR LINE JOINT R&S	100.00%	2,000	LIN FT	$2.00		$4,000	
	RNDM / THRM CRACK R&S	50.00%	2,200	LIN FT	$2.00		$4,400	
	PD PVMT PATCH M&F SURF	0.50%	27	SQ YD	$80.64		$2,177	
	PWFn =	0.7441		PW =	0.7441	X	$18,577	$13,823
YEAR 15								
	MILL PVMT & SHLD 2.00"	100.00%	8,889	SQ YD	$3.00		$26,667	
	PD PVMT PATCH M&F ADD'L 2.00"	1.00%	53	SQ YD	$79.52		$4,215	
	HMA OVERLAY PVMT 2.00"	100.00%	5,333	SQ YD	$10.71		$57,141	
	HMA OVERLAY SHLD 2.00 "	100.00%	3,556	SQ YD	$8.06		$28,672	
	PWFn =	0.6419		PW =	0.6419	X	$116,695	$74,902
YEAR 20								
	LONG SHLD JT R&S	100.00%	4,000	LIN FT	$2.00		$8,000	
	CNTR LINE JOINT R&S	100.00%	2,000	LIN FT	$2.00		$4,000	
	RNDM / THRM CRACK R&S	50.00%	2,200	LIN FT	$2.00		$4,400	
	PD PVMT PATCH M&F SURF	0.10%	5	SQ YD	$80.64		$403	
	PWFn =	0.5537		PW =	0.5537	X	$16,803	$9,303
YEAR 25								
	LONG SHLD JT R&S	100.00%	4,000	LIN FT	$2.00		$8,000	
	CNTR LINE JOINT R&S	100.00%	2,000	LIN FT	$2.00		$4,000	
	RNDM / THRM CRACK R&S	50.00%	2,200	LIN FT	$2.00		$4,400	
	PD PVMT PATCH M&F SURF	0.50%	27	SQ YD	$80.64		$2,177	
	PWFn =	0.4776		PW =	0.4776	X	$18,577	$8,872
	HMA_SD							
YEAR 30	INTERSTATE							
	MILL PVMT ONLY 2.00"	100.00%	5,333	SQ YD	$3.00		$15,999	
	PD PVMT PATCH M&F ADD'L 2.00"	2.00%	107	SQ YD	$79.52		$8,509	
	PD SHLD PATCH M&F SURF 2.00"	1.00%	36	SQ YD	$78.06		$2,810	
	HMA OVERLAY PVMT 3.75 "	100.00%	5,333	SQ YD	$20.21		$107,785	
	HMA OVERLAY SHLD 1.75 "	100.00%	3,556	SQ YD	$7.06		$25,088	
	PWFn =	0.4120		PW =	0.4120	X	$160,191	$65,997
YEAR 35								
	LONG SHLD JT R&S	100.00%	4,000	LIN FT	$2.00		$8,000	
	CNTR LINE JOINT R&S	100.00%	2,000	LIN FT	$2.00		$4,000	
	RNDM / THRM CRACK R&S	50.00%	2,200	LIN FT	$2.00		$4,400	
	PD PVMT PATCH M&F SURF	0.10%	5	SQ YD	$80.64		$403	
	PWFn =	0.3554		PW =	0.3554	X	$16,803	$5,972
YEAR 40								
	LONG SHLD JT R&S	100.00%	4,000	LIN FT	$2.00		$8,000	
	CNTR LINE JOINT R&S	100.00%	2,000	LIN FT	$2.00		$4,000	
	RNDM / THRM CRACK R&S	50.00%	2,200	LIN FT	$2.00		$4,400	
	PD PVMT PATCH M&F SURF	0.50%	27	SQ YD	$80.64		$2,177	
	PWFn =	0.3066		PW =	0.3066	X	$18,577	$5,695
								$199,058
	ROUTINE MAINTENANCE ACTIVITY		0.76	Lane Miles	0.00		$0	$0
					MAINTENANCE LIFE-CYCLE COST			$199,058
45	YEAR LIFE CYCLE	CRFn = 0.0407852			MAINTENANCE ANNUAL COST PER MILE			$42,866

PCC PAVEMENT

JPCP

ROUTE		Job Route
SECTION		Job Section
COUNTY		Job County
LOCATION		Job Location
FACILITY TYPE		INTERSTATE
PROJECT LENGTH		1000 FT = = > 0.19 Miles
# OF CENTERLINES		2 CL
# OF LANES		4 LANES
# OF EDGES		4 EP
LANE WIDTH - AVERAGE		12 FT
SHOULDER WIDTH	PCC Inside	6 FT
	PCC Outside	10 FT
	Total Width of Paved Shoulders	32 FT
PAVEMENT THICKNESS (RIGID)	JPCP	10.00 IN TIED SHLD
SHOULDER THICKNESS		10.00 IN
POLICY OVERLAY THICKNESS		3.75 IN

RIGID PAVEMENT TRAFFIC FACTORS	MINIMUM	ACTUAL	USE
	10.05	1.00	10.05
Worksheet Construction Type is New Construction		The Pavement Type is	JPCP

INITIAL COSTS

ITEM	THICKNESS	100% QUANTITY	UNIT	UNIT PRICE		COST
JPC PAVEMENT	(10.00")	5,333	SQ YD	$50.00	/ SQ YD	$266,650
PAVEMENT REINFORCEMENT		0	SQ YD	$22.00	/ SQ YD	$0
STABILIZED SUBBASE	(4.00")	6,000	SQ YD	$19.00	/ SQ YD	$114,000
PCC SHOULDERS		3,556	SQ YD	$40.00	/ SQ YD	$142,240
CURB & GUTTER		0	LIN FT	$30.00	/ LIN FT	$0
SUBBASE GRAN MATL TY C	(= 3.48")	418	TONS	$25.00	/ TON	$10,450
IMPROVED SUBGRADE:	Aggregate Width = 48.0	9,111	SQ YD	$7.00	/ SQ YD	$63,777
Reserved For User Supplied Item		0	UNITS	$0.00	/ UNITS	$0
Reserved For User Supplied Item		0	UNITS	$0.00	/ UNITS	$0
PAVEMENT REMOVAL		5,333	SQ YD	$0.00	/ SQ YD	$0
SHOULDER REMOVAL		3,556	SQ YD	$0.00	/ SQ YD	$0

Note: * Denotes User Supplied Quantity

RIGID CONSTRUCTION INITIAL COST	$597,117
RIGID CONSTRUCTION ANNUAL COST PER MILE	$128,587

MAINTENANCE COSTS:

ITEM	THICKNESS		MATERIAL		UNIT COST	
ROUTINE MAINTENANCE ACTIVITY					$0.00	/ LANE-MILE / YEAR
HMA POLICY OVERLAY	(3.75")			3.75		
HMA POLICY OVERLAY PVMT	(3.75")	1.0100		3.75	$20.21	/ SQ YD
HMA SURFACE MIX	(1.50")	1.0050	Surface Mix	1.50	$8.02	/ SQ YD
HMA BINDER MIX	(2.25")	1.0182	Top Binder Mix	2.25	$12.19	/ SQ YD
HMA POLICY OVERLAY SHLD	(3.75")		Shoulder Mix	3.75	$15.12	/ SQ YD
CLASS A PAVEMENT PATCHING					$195.00	/ SQ YD
CLASS B PAVEMENT PATCHING					$150.00	/ SQ YD
CLASS C SHOULDER PATCHING					$145.00	/ SQ YD
PARTIAL DEPTH PVMT PATCH (Mill & Fill HMA Surf)			Surface Mix	1.50	$77.98	/ SQ YD
PARTIAL DEPTH PVMT PATCH (Mill & Fill HMA 1.50")			Surface Mix	1.50	$77.98	/ SQ YD
LONGITUDINAL SHOULDER JOINT ROUT & SEAL					$2.00	/ LIN FT
CENTERLINE JOINT ROUT & SEAL					$2.00	/ LIN FT
REFLECTIVE TRANSVERSE CRACK ROUT & SEAL					$2.00	/ LIN FT
RANDOM CRACK ROUT & SEAL	(100% Rehab = 100.00' / Station / Lane)				$2.00	/ LIN FT

RIGID TOTAL LIFE-CYCLE COST	$727,263
RIGID TOTAL ANNUAL COST PER MILE	$156,613

MAINTENANCE AND REHABILITATION ACTIVITY SCHEDULE 07/08/19

JOINTED PLAIN CONCRETE PAVEMENT
UNBONDED JOINTED PLAIN CONCRETE OVERLAY
Figure 54-7.A

MAINTENANCE COSTS:	ITEM	%	QUANTITY	UNIT	UNIT COST		COST	PRESENT WORTH
YEAR 10								
	PAVEMENT PATCH CLASS B	0.10%	5	SQ YD	$150.00		$750	
	PWFn =	0.7441		PW =	0.7441	X	$750	$558
YEAR 15								
	PAVEMENT PATCH CLASS B	0.20%	11	SQ YD	$150.00		$1,650	
	PWFn =	0.6419		PW =	0.6419	X	$1,650	$1,059
YEAR 20								
	PAVEMENT PATCH CLASS B	2.00%	107	SQ YD	$150.00		$16,050	
	SHOULDER PATCH CLASS C	0.50%	18	SQ YD	$145.00		$2,610	
	LONGITUDINAL SHLD JT R&S	100.00%	4,000	LIN FT	$2.00		$8,000	
	CENTERLINE JT R&S	100.00%	2,000	LIN FT	$2.00		$4,000	
	PWFn =	0.5537		PW =	0.5537	X	$30,660	$16,976
YEAR 25								
	PAVEMENT PATCH CLASS B	3.00%	160	SQ YD	$150.00		$24,000	
	SHOULDER PATCH CLASS C	1.00%	36	SQ YD	$145.00		$5,220	
	PWFn =	0.4776		PW =	0.4776	X	$29,220	$13,956
YEAR 30	INTERSTATE							
	PAVEMENT PATCH CLASS B	4.00%	213	SQ YD	$150.00		$31,950	
	SHOULDER PATCH CLASS C	1.50%	53	SQ YD	$145.00		$7,685	
	HMA POLICY OVERLAY 3.75" (PVMT)	100.00%	5,333	SQ YD	$20.21		$107,785	
	HMA POLICY OVERLAY 3.75" (SHLD)	100.00%	3,556	SQ YD	$15.12		$53,760	
	PWFn =	0.4120		PW =	0.4120	X	$201,180	$82,883
YEAR 35	INTERSTATE							
	LONGITUDINAL SHLD JT R&S	100.00%	4,000	LIN FT	$2.00		$8,000	
	CENTERLINE JT R&S	100.00%	2,000	LIN FT	$2.00		$4,000	
	RANDOM CRACK R&S	50.00%	2,000	LIN FT	$2.00		$4,000	
	REFLECTIVE TRANSVERSE CRACK R&S	40.00%	1,286	LIN FT	$2.00		$2,572	
	PD PVMT PATCH M&F HMA SURF 1.50"	0.10%	5	SQ YD	$77.98		$390	
	PWFn =	0.3554		PW =	0.3554	X	$18,962	$6,739
YEAR 40	INTERSTATE							
	PAVEMENT PATCH CLASS B	0.50%	27	SQ YD	$150.00		$4,050	
	LONGITUDINAL SHLD JT R&S	100.00%	4,000	LIN FT	$2.00		$8,000	
	CENTERLINE JT R&S	100.00%	2,000	LIN FT	$2.00		$4,000	
	REFLECTIVE TRANSVERSE CRACK R&S	60.00%	1,930	LIN FT	$2.00		$3,860	
	RANDOM CRACK R&S	50.00%	2,000	LIN FT	$2.00		$4,000	
	PD PVMT PATCH M&F HMA SURF 1.50"	0.50%	27	SQ YD	$77.98		$2,105	
	PWFn =	0.3066		PW =	0.3066	X	$26,015	$7,975
								$130,146
	ROUTINE MAINTENANCE ACTIVITY		0.76	Lane Miles	$0.00		$0	$0
					MAINTENANCE LIFE-CYCLE COST			$130,146
45	YEAR LIFE CYCLE	CRFn = 0.0407852			MAINTENANCE ANNUAL COST PER MILE			$28,026

LIFE-CYCLE COST ANALYSIS: NEW DESIGN

Calculated / Revised : 7/8/19 10:41 AM

			JPCP	HMA
CONSTRUCTION	INITIAL COST	PRESENT WORTH	$597,117	$512,043
		ANNUAL COST PER MILE	$128,587	$110,266
MAINTENANCE	LIFE-CYCLE COST	PRESENT WORTH	$130,146	$199,058
		ANNUAL COST PER MILE	$28,026	$42,866
TOTAL	LIFE-CYCLE COST	PRESENT WORTH	$727,263	$711,101
		ANNUAL COST PER MILE	$156,613	$153,133

LIFE-CYCLE COST ANALYSIS: FINAL SUMMARY

LOWEST COST OPTION	==========>	HMA	$153,133	
OTHER OPTIONS (LOWEST TO HIGHEST):	TYPE / PERCENTAGE	JPCP	$156,613	2.3%

S:\GEN\WPDOCS\Pavement Designs\D-1\IL 176 - Deerpass Rd to Dean St - 62G35\[IL 176-IDOT Mech Pvmt Dgn LCCA 09-05-13.xlsm]LifeCycleCost