Illinois Department of Transportation

To:	John Fortmann	Attn: District One
From:	Maureen M. Addis	
Subject:	Pavement Design	
Date:	September 10, 2016	

FAU Route 3545/1411 (IL 56 – Butterfield Road)
Section 11-00047-00-FP
Cook County
From Wolf Road to US 12/20/45

The project, submitted to BDE by email memo dated July 8, 2016, will reconstruct IL 56 to provide a two-way left turn lane with on-street parking lanes. BDE revised the LCCA, and it still favors a flexible design by more than 10%. The project does not require alternate bidding. The approved pavement design is as follows:

IL 56 (Pavement Reconstruction)

10 inches of Full Depth HMA Pavement with PCC Curb & Gutter
- 2 inches of HMA Surface Course, Mix "D", N70
- 8 inches of HMA Base Course, IL-19.0, N70

12 inches of Aggregate Subgrade Improvement

IL 56 (Pavement Resurfacing)

2.25 inches minimum cold milling of HMA Pavement
- 1.50 inches of HMA Surface Course, Mix "D", N70
- 0.75 inches of Leveling Binder (Machine Method), N70

IL 56 (Temporary Pavement)

Option 1
10 inches of Full Depth Temporary HMA Pavement
- 2 inches of HMA Surface Course, Mix "D", N50
- 8 inches of HMA Binder Course, IL-19.0, N50

4 inches of Subgrade Granular Material Type B

Option 2
8 inches of Temporary PCC Pavement
4 inches of Subgrade Granular Material Type B

If you have any questions, please contact Paul Niedernhofer at (217) 524-1651.

Illinois Department of Transportation

Memorandum

To: Maureen Addis — Attn: Paul Niedernhofer

From: Jose A. Dominguez — By: Melchor Mangoba / Ojas Patel

Subject: Pavement Analysis*

Date: July 6, 2016

*Route: IL 56 (Butterfield Road) — County: Cook
Limits: Wolf Road to US 1220/45 — Contract No.: Local Roads
Section: 11-00047-00-FP — Current target: 01CY17

We have completed the pavement analysis for the above captioned location. Review by the Central Office is required since the total pavement area for reconstruction exceeds 4,750 Square Yards. The following is the scope of the project:

Reconstruction and resurfacing (streetscape) of IL 56 from Wolf Road to US 12/20/45 to provide a two-way left turn lane with on-street parking lanes.

A 20-year pavement analysis was performed for the above segment. We recommend a mechanistic flexible pavement design as follows based on the life cycle cost analysis which favors HMA pavement by 27%.

IL 56
Reconstruction
PCC Curb and Gutter
10" Full Depth HMA[1, 8]
- 2" HMA Surface Course, Mix "D", N70
- 8" HMA Base Course, IL-19.0, N70

12" Aggregate Subgrade Improvement[4]

Pavement Resurfacing[8]
Cold Milling of HMA Pavement
2 ¼" minimum (more if necessary)
- 1 ½" HMA Surface Course, Mix "D", N70[2]
- ¾" Leveling Binder (Machine Method), N70[3]

IL 56 (Temporary Pavement)
Option 1[5]
- Temporary Pavement
  - 10" Full Depth Temporary HMA Pavement[6]
    - 2" HMA Surface Course, Mix "D", N50
    - 8" HMA Binder Course, IL-19.0, N50
  - 4" Subbase Granular Material Type B (CA-6)[7]

Option 2[5]
Temporary Pavement
8" Temporary PCC Pavement[6]
4" Subbase Granular Material Type B (CA-6)[7]

[1]Designer Note 1: Use pay item **40701881, HOT-MIX ASPHALT PAVEMENT (FULL-DEPTH), 10",** paid for in square yards.

[2]Designer Note 2: Use pay item **40603340, HOT-MIX ASPHALT SURFACE COURSE, MIX "D", N70** paid for in tons.

[3]Designer Note 3: Use pay item **40600635, LEVELING BINDER (MACHINE METHOD), N70** paid for in tons.

[4]Designer Note 4: Use pay item **30300112, AGGREGATE SUBGRADE IMPROVEMENT, 12"**, paid in square yards.

[5]Designer Note 5: The contractor shall have the option of constructing either material type if both Portland cement concrete and HMA are shown in the plans. For quantity estimation purposes, excavation quantities should be estimated assuming the thicker design if both options are shown in the plans.

[6]Designer Note 6: Use pay item **Z0062456, TEMPORARY PAVEMENT**, paid in square yards.

The HMA temporary pavement shall consist of two items, HMA binder course and HMA surface course. Include both items in the HMA mix table requirements.

When PC Temp Pavement is used as an option, the following note shall appear on the plans adjacent to the HMA mix table: "PC Concrete temporary pavement shall consist of Class PV Concrete meeting the requirements of Art.1020 of the Standard Specifications. Temporary PCC pavement does not require dowel bars.

[7]Designer Note 7: Use pay item **31101200, SUBBASE GRANULAR MATERIAL, TYPE B 4",** paid in square yards

[8]Designer Note 8: Refer to the District One, Bureau of Materials' "Hot-Mix Asphalt – Mix Selection" tables to determine the corresponding HMA mix table requirements for the plans.

If you have any questions or need additional information, please contact Ojas Patel, Pavement Design Engineer, at (847)705-4550.

By: José A. Dominguez
Jose A. Dominguez, P.E.
Project Support Engineer

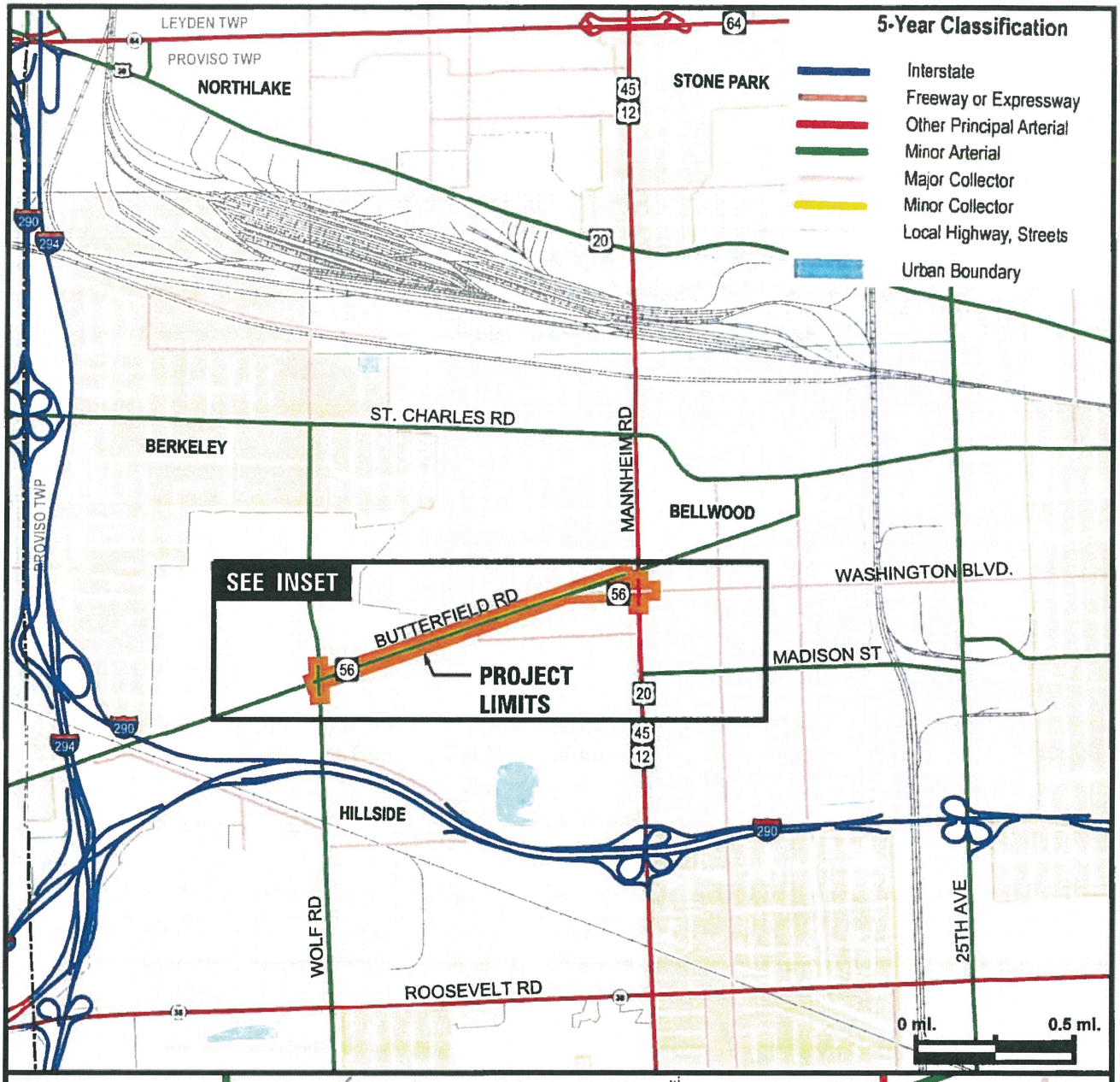

HANSON

© Copyright Hanson Professional Services Inc. 2014

N

LOCATION MAP

ILLINOIS ROUTE 56 WIDENING
VILLAGE OF HILLSIDE
SEC. NO. 11–00047–00–FP

EXHIBIT 1

BDE 5401 Template (Rev. 09/05/2013)

IDOT MECHANISTIC PAVEMENT DESIGN

Printed: 09/09/2016

PROJECT AND TRAFFIC INPUTS

(Enter Data in Gray Shaded Cells)

Route: IL 56 (Butterfield Road)
Section: 11-00047-00-FP
County: Cook
Location: from Wolf Road to US 12/20/45

Comments: Local Roads Project to reconstruct IL 56
Design Date: 06/21/2016 ONP <-- BY
Modify Date: <-- BY

	ADT	Year
Current:	12,500	2012
Future:	15,000	2040

Facility Type: Other Marked State Route
# of Lanes = 2 or 3
Part of future 4 lanes or more ? No
One Way Street ? No
Road Class: II

Subgrade Support Rating (SSR): Poor
Construction Year: 2017
Design Period (DP) = 20 years

	Structural Design Traffic			
	Minimum ADT	Actual ADT	Actual %of Total ADT	% of ADT in Design Lane
PV =	0	12,538	90.6%	P = 50%
SU =	250	955	6.9%	S = 50%
MU =	750	346	2.5%	M = 50%
Struct. Design ADT =		13,839	(2027)	

TRAFFIC FACTOR CALCULATION

FLEXIBLE PAVEMENT			RIGID PAVEMENT		
Cpv =	0.15		Cpv =	0.15	
Csu =	112.06		Csu =	135.78	
Cmu =	385.44		Cmu =	567.21	
TF flexible (Actual) =	2.42	(Actual ADT)	TF rigid (Actual) =	3.28	(Actual ADT)
TF flexible (Min) =	3.17	(Min ADT Fig. 54-2.C)	TF rigid (Min) =	4.59	(Min ADT Fig. 54-2.C)

NEW CONSTRUCTION / RECONSTRUCTION PAVEMENT DESIGN CALCULATIONS

Full-Depth HMA Pavement

Use TF flexible = 3.17
PG Grade Lower Binder Lifts = PG 64-22 (Fig. 53-4.R)
Goto Map
HMA Mixture Temp. = 74.5 deg. F (Fig. 54-5.C)
Design HMA Mixture Modulus (E_{HMA}) = 710 ksi (Fig. 54-5.D)
Design HMA Strain (ε_{HMA}) = 86 (Fig. 54-5.E)
Goto Map
Full Depth HMA Design Thickness = 10.00 in. (Fig. 54-5.F)
Limiting Strain Criterion Thickness = 14.75 in. (Fig. 54-5.I)

Use Full-Depth HMA Thickness = 10.00 inches

JPC Pavement

Use TF rigid = 4.59
Edge Support = Tied Shoulder or C.&G.

Rigid Pavt Thick. = 9.00 in. (Fig. 54-4.E)

CRC Pavement

Use TF rigid = 4.59
IBR value = 3

CRCP Thickness = 7.75 in. (Fig. 54-4.N)

TF MUST BE > 60 FOR CRCP

RECONSTRUCTION ONLY (SUPPLEMENTAL) PAVEMENT DESIGN CALCULATIONS

HMA Overlay of Rubblized PCC

Use TF flexible = 3.17
HMA Overlay Design Thickness = 7.25 in. (Fig. 54-5.U)
Goto Map
Limiting Strain Criterion Thickness = in. (Fig. 54-5.V)

Use HMA Overlay Thickness = 999.00 inches

Unbonded Concrete Overlay

Review 54-4.03 for limitations and special considerations.

JPCP Thickness = NA inches

CONTACT BMPR FOR ASSISTANCE

DESIGN TABLES FROM BDE MANUAL CHAPTER 54 - PAVEMENT DESIGN

Class I Roads	Class II Roads	Class III Roads	Class IV Roads
4 lanes or more Part of a future 4 lanes or more One-way Streets with ADT > 3500	2 lanes with ADT > 2000 One way Street with ADT <= 3500	2 Lanes (ADT 750 -2000)	2 Lanes (ADT < 750)

	Min. Str. Design Traffic (Fig 54-2.C)		
Facility Type	PV	SU	MU
Interstate or Freeway	0	500	1500
Other Marked State Route	0	250	750
Unmarked State Route	No Min	No Min	No Min

Class Table for One-Way Streets	
ADT	Class
0 - 3500	II
>3501	I

	Traffic Factor ESAL Coefficients			
	Rigid (Fig. 54-4.C)		Flexible (Fig. 54-5.B)	
Class	Csu	Cmu	Csu	Cmu
I	143.81	696.42	132.50	482.53
II	135.78	567.21	112.06	385.44
III	129.58	562.47	109.14	384.35
IV	129.58	562.47	109.14	384.35

Class Table for 2 or 3 lanes (not future 4 lane & not one-way street)	
ADT	Class
0 - 749	IV
750 - 2000	III
>2000	II

	Design Lane Distribution Factors For Structural Design Traffic (Fig. 54-2.B)					
	Rural			Urban		
Number of Lanes	P	S	M	P	S	M
1 Lane Ramp	100%	100%	100%	100%	100%	100%
2 or 3	50%	50%	50%	50%	50%	50%
4	32%	45%	45%	32%	45%	45%
6 or more	20%	40%	40%	8%	37%	37%

BDE 5401 Template (Rev. 09/05/2013) Printed: 09/09/2016

LIFE-CYCLE COST ANALYSIS: NEW CONSTRUCTION / RECONSTRUCTION

FULL-DEPTH HMA PAVEMENT

Standard Design

ROUTE	IL 56 (Butterfield Road)
SECTION	11-00047-00-FP
COUNTY	Cook
LOCATION	from Wolf Road to US 12/20/45
FACILITY TYPE	NON-INTERSTATE

PROJECT LENGTH		5420 FT	= = >	1.03 Miles
# OF CENTERLINES		4 CL		
# OF LANES		4 LANES		
# OF EDGES		2 EP		
LANE WIDTH - AVERAGE		12 FT		
SHOULDER WIDTH	HMA Left	0 FT		
	HMA Right	0 FT		
	Total Width of Paved Shoulders	0 FT		

PAVEMENT THICKNESS (FLEXIBLE)	10.00 IN	14.75 IN MAX	
SHOULDER THICKNESS	8.00 IN	HMA_SD	Standard Design
POLICY OVERLAY THICKNESS	2.25 IN		

FLEX PAVEMENT TRAFFIC FACTORS	MINIMUM	ACTUAL	USE
	3.17	2.42	3.17

Read Me!

HMA COST PER TON	UNIT PRICE
HMA SURFACE	$83.00 / TON
HMA TOP BINDER	$78.00 / TON
HMA LOWER BINDER	$72.00 / TON
HMA BINDER (LEVELING)	$70.00 / TON
HMA SHOULDER	$74.00 / TON

INITIAL COSTS

ITEM	THICKNESS		100% QUANTITY	UNIT		UNIT PRICE		COST	
HMA PAVEMENT (FULL-DEPTH)	(10.00")	23507	28,907	SQ YD		$43.02	/ SQ YD	$1,243,579	~
HMA SURFACE COURSE	(2.00")	1.0035	3,249	TONS		$83.00	/ TON	$0	
HMA TOP BINDER COURSE	(2.25")	1.0109	3,682	TONS		$78.00	/ TON	$0	
HMA LOWER BINDER COURSE	(5.75")	1.0247	9,538	TONS		$72.00	/ TON	$0	
HMA SHOULDER	(8.00")	0	0	TONS		$74.00	/ TON	$0	~
CURB & GUTTER			10,800	LIN FT	*	$30.00	/ LIN FT	$324,000	
SUBBASE GRAN MATL TY C (TONS)			57	TONS		$25.00	/ TON	$1,425	
IMPROVED SUBGRADE:	Aggregate	Width = 60.7'	30,513	SQ YD		$7.00	/ SQ YD	$213,591	
Reserved For User Supplied Item			0	UNITS		$0.00	/ UNITS	$0	
Reserved For User Supplied Item			0	UNITS		$0.00	/ UNITS	$0	
PAVEMENT REMOVAL			15	SQ YD	*	$0.00	/ SQ YD	$0	
SHOULDER REMOVAL			0	SQ YD		$0.00	/ SQ YD	$0	

Note: * Denotes User Supplied Quantity

FLEXIBLE CONSTRUCTION INITIAL COST	$1,782,595
FLEXIBLE CONSTRUCTION ANNUAL COST PER MILE	$70,826

MAINTENANCE COSTS:

ITEM		THICKNESS		MATERIAL	T	UNIT COST	
ROUTINE MAINTENANCE ACTIVITY						$0.00	LANE-MILE / YEAR
HMA OVERLAY PVMT SURF		(2.00")	1.0035	Surface Mix	2.00	$9.33	/ SQ YD
HMA OVERLAY PVMT		(2.25")	1.0439		2.25	$9.95	/ SQ YD
HMA SURFACE MIX		(1.50")	1.0026	Surface Mix	1.50	$6.99	/ SQ YD
HMA BINDER MIX		(0.75")	1.0085	eling Binder Mix	0.75	$2.96	/ SQ YD
HMA OVERLAY SHLD	(Year 30)	(2.25")		Shoulder Mix	2.25	$9.32	/ SQ YD
HMA OVERLAY SHLD		(2.00")		Shoulder Mix	2.00	$8.29	/ SQ YD
MILLING (2.00 IN)					2.00	$3.00	/ SQ YD
PARTIAL DEPTH PVMT PATCH		(Mill & Fill Surf)		Surface Mix	2.00	$79.30	/ SQ YD
PARTIAL DEPTH SHLD PATCH		(Mill & Fill Surf)		Shoulder Mix	2.00	$78.29	/ SQ YD
PARTIAL DEPTH PVMT PATCH		(Mill & Fill +2.00 ")		Leveling Binder Mix	2.00	$77.84	/ SQ YD
PARTIAL DEPTH SHLD PATCH		(Mill & Fill +2.00 ")		Shoulder Mix	2.00	$78.29	/ SQ YD
LONGITUDINAL SHOULDER JOINT ROUT & SEAL						$2.00	/ LIN FT
CENTERLINE JOINT ROUT & SEAL						$2.00	/ LIN FT
RANDOM / THERMAL CRACK ROUT & SEAL			(100% Rehab = 110.00' / Station / Lane)			$2.00	/ LIN FT

FLEXIBLE TOTAL LIFE-CYCLE COST	$2,513,499
FLEXIBLE TOTAL ANNUAL COST PER MILE	$99,866

HMA_SD

MAINTENANCE AND REHABILITATION ACTIVITY SCHEDULE 09/09/16

FULL-DEPTH HMA PAVEMENT
HMA OVERLAY OF RUBBLIZED PCC PAVEMENT
Figure 54-7.C
STANDARD DESIGN

MAINTENANCE COSTS:	ITEM	%	QUANTITY	UNIT	UNIT COST		COST	PRESENT WORTH
YEAR 5								
	LONG SHLD JT R&S	100.00%	10,840	LIN FT	$2.00		$21,680	
	CNTR LINE JOINT R&S	100.00%	21,680	LIN FT	$2.00		$43,360	
	RNDM / THRM CRACK R&S	50.00%	11,924	LIN FT	$2.00		$23,848	
	PD PVMT PATCH M&F SURF	0.10%	29	SQ YD	$79.30		$2,300	
	PWFn =	0.8626		PW =	0.8626	X	$91,188	$78,660
YEAR 10								
	LONG SHLD JT R&S	100.00%	10,840	LIN FT	$2.00		$21,680	
	CNTR LINE JOINT R&S	100.00%	21,680	LIN FT	$2.00		$43,360	
	RNDM / THRM CRACK R&S	50.00%	11,924	LIN FT	$2.00		$23,848	
	PD PVMT PATCH M&F SURF	0.50%	145	SQ YD	$79.30		$11,498	
	PWFn =	0.7441		PW =	0.7441	X	$100,386	$74,697
YEAR 15								
	MILL PVMT & SHLD 2.00"	100.00%	28,907	SQ YD	$3.00		$86,721	
	PD PVMT PATCH M&F ADD'L 2.00"	1.00%	289	SQ YD	$77.84		$22,496	
	HMA OVERLAY PVMT 2.00"	100.00%	28,907	SQ YD	$9.33		$269,649	
	HMA OVERLAY SHLD 2.00 "	100.00%	0	SQ YD	$8.29		$0	
	PWFn =	0.6419		PW =	0.6419	X	$378,866	$243,180
YEAR 20								
	LONG SHLD JT R&S	100.00%	10,840	LIN FT	$2.00		$21,680	
	CNTR LINE JOINT R&S	100.00%	21,680	LIN FT	$2.00		$43,360	
	RNDM / THRM CRACK R&S	50.00%	11,924	LIN FT	$2.00		$23,848	
	PD PVMT PATCH M&F SURF	0.10%	29	SQ YD	$79.30		$2,300	
	PWFn =	0.5537		PW =	0.5537	X	$91,188	$50,489
YEAR 25								
	LONG SHLD JT R&S	100.00%	10,840	LIN FT	$2.00		$21,680	
	CNTR LINE JOINT R&S	100.00%	21,680	LIN FT	$2.00		$43,360	
	RNDM / THRM CRACK R&S	50.00%	11,924	LIN FT	$2.00		$23,848	
	PD PVMT PATCH M&F SURF	0.50%	145	SQ YD	$79.30		$11,498	
	PWFn =	0.4776		PW =	0.4776	X	$100,386	$47,945
HMA_SD								
YEAR 30	NON-INTERSTATE							
	MILL PVMT & SHLD 2.00"	100.00%	28,907	SQ YD	$3.00		$86,721	
	PD PVMT PATCH M&F ADD'L 2.00"	2.00%	578	SQ YD	$77.84		$44,992	
	PD SHLD PATCH M&F ADD'L 2.00"	1.00%	0	SQ YD	$78.29		$0	
	HMA OVERLAY PVMT 2.25 "	100.00%	28,907	SQ YD	$9.95		$287,601	
	HMA OVERLAY SHLD 2.25 "	100.00%	0	SQ YD	$9.32		$0	
	PWFn =	0.4120		PW =	0.4120	X	$419,314	$172,752
YEAR 35								
	LONG SHLD JT R&S	100.00%	10,840	LIN FT	$2.00		$21,680	
	CNTR LINE JOINT R&S	100.00%	21,680	LIN FT	$2.00		$43,360	
	RNDM / THRM CRACK R&S	50.00%	11,924	LIN FT	$2.00		$23,848	
	PD PVMT PATCH M&F SURF	0.10%	29	SQ YD	$79.30		$2,300	
	PWFn =	0.3554		PW =	0.3554	X	$91,188	$32,407
YEAR 40								
	LONG SHLD JT R&S	100.00%	10,840	LIN FT	$2.00		$21,680	
	CNTR LINE JOINT R&S	100.00%	21,680	LIN FT	$2.00		$43,360	
	RNDM / THRM CRACK R&S	50.00%	11,924	LIN FT	$2.00		$23,848	
	PD PVMT PATCH M&F SURF	0.50%	145	SQ YD	$79.30		$11,498	
	PWFn =	0.3066		PW =	0.3066	X	$100,386	$30,774
								$730,904
	ROUTINE MAINTENANCE ACTIVITY		4.11	Lane Miles	0.00		$0	$0
					MAINTENANCE LIFE-CYCLE COST			$730,904
45	YEAR LIFE CYCLE	CRFn = 0.0407852			MAINTENANCE ANNUAL COST PER MILE			$29,040

PCC PAVEMENT

JPCP

ROUTE		IL 56 (Butterfield Road)	
SECTION		11-00047-00-FP	
COUNTY		Cook	
LOCATION		from Wolf Road to US 12/20/45	
FACILITY TYPE		NON-INTERSTATE	
PROJECT LENGTH		5420 FT = = >	1.03 Miles
# OF CENTERLINES		4 CL	
# OF LANES		4 LANES	
# OF EDGES		2 EP	
LANE WIDTH - AVERAGE		12 FT	
SHOULDER WIDTH	PCC Left	0 FT	
	PCC Right	0 FT	
	Total Width of Paved Shoulders	0 FT	

PAVEMENT THICKNESS (RIGID)	JPCP	9.00 IN	TIED SHLD
SHOULDER THICKNESS		9.00 IN	
POLICY OVERLAY THICKNESS		2.50 IN	

RIGID PAVEMENT TRAFFIC FACTORS		MINIMUM	ACTUAL	USE
		4.59	3.28	4.59
Worksheet Construction Type is	Reconstruction		The Pavement Type is	JPCP

INITIAL COSTS

ITEM	THICKNESS	100% QUANTITY	UNIT		UNIT PRICE		COST
JPC PAVEMENT	(9.00")	28,907	SQ YD		$52.00	/ SQ YD	$1,503,164
PAVEMENT REINFORCEMENT		0	SQ YD		$22.00	/ SQ YD	$0
STABILIZED SUBBASE	(4.00")	0	SQ YD	*	$19.00	/ SQ YD	$0
PCC SHOULDERS	(9.00" to 9.00")	0	SQ YD		$40.00	/ SQ YD	$0
CURB & GUTTER		10,800	LIN FT	*	$30.00	/ LIN FT	$324,000
SUBBASE GRAN MATL TY C	(~ 9.00")	0	TONS		$25.00	/ TON	$0
IMPROVED SUBGRADE:	Aggregate Width = 49.0'	29,509	SQ YD		$7.00	/ SQ YD	$206,563
Reserved For User Supplied Item		0	UNITS		$0.00	/ UNITS	$0
Reserved For User Supplied Item		0	UNITS		$0.00	/ UNITS	$0
PAVEMENT REMOVAL		28,907	SQ YD		$15.00	/ SQ YD	$433,605
SHOULDER REMOVAL		0	SQ YD		$0.00	/ SQ YD	$0

Note: * Denotes User Supplied Quantity

RIGID CONSTRUCTION INITIAL COST	$2,467,332
RIGID CONSTRUCTION ANNUAL COST PER MILE	$98,031

MAINTENANCE COSTS:

ITEM	THICKNESS		MATERIAL	T	UNIT COST	
ROUTINE MAINTENANCE ACTIVITY					$0.00	/ LANE-MILE / YEAR
HMA POLICY OVERLAY	(2.50")			2.50		
HMA POLICY OVERLAY PVMT	(2.50")	1.0043		2.50	$10.94	/ SQ YD
HMA SURFACE MIX	(1.50")	1.0026	Surface Mix	1.50	$6.99	/ SQ YD
HMA BINDER MIX	(1.00")	1.0069	eling Binder Mix	1.00	$3.95	/ SQ YD
HMA POLICY OVERLAY SHLD	(2.50")		Shoulder Mix	2.50	$10.36	/ SQ YD
CLASS A PAVEMENT PATCHING					$195.00	/ SQ YD
CLASS B PAVEMENT PATCHING					$150.00	/ SQ YD
CLASS C SHOULDER PATCHING					$145.00	/ SQ YD
PARTIAL DEPTH PVMT PATCH (Mill & Fill HMA Surf)			Surface Mix	1.50	$76.97	/ SQ YD
PARTIAL DEPTH PVMT PATCH (Mill & Fill HMA 2.50")			Surface Mix	2.50	$81.62	/ SQ YD
LONGITUDINAL SHOULDER JOINT ROUT & SEAL					$2.00	/ LIN FT
CENTERLINE JOINT ROUT & SEAL					$2.00	/ LIN FT
REFLECTIVE TRANSVERSE CRACK ROUT & SEAL					$2.00	/ LIN FT
RANDOM CRACK ROUT & SEAL	(100% Rehab = 100.00' / Station / Lane)				$2.00	/ LIN FT

RIGID TOTAL LIFE-CYCLE COST	$2,903,815
RIGID TOTAL ANNUAL COST PER MILE	$115,373

JPCP MAINTENANCE AND REHABILITATION ACTIVITY SCHEDULE 09/09/16

JOINTED PLAIN CONCRETE PAVEMENT
UNBONDED JOINTED PLAIN CONCRETE OVERLAY
Figure 54-7.A

MAINTENANCE COSTS:	ITEM	%	QUANTITY	UNIT	UNIT COST		COST	PRESENT WORTH
YEAR 10								
	PAVEMENT PATCH CLASS B	0.10%	29	SQ YD	$150.00		$4,350	
	PWFn =	0.7441		PW =	0.7441	X	$4,350	$3,237
YEAR 15								
	PAVEMENT PATCH CLASS B	0.20%	58	SQ YD	$150.00		$8,700	
	PWFn =	0.6419		PW =	0.6419	X	$8,700	$5,584
YEAR 20								
	PAVEMENT PATCH CLASS B	2.00%	578	SQ YD	$150.00		$86,700	
	SHOULDER PATCH CLASS C	0.50%	0	SQ YD	$145.00		$0	
	LONGITUDINAL SHLD JT R&S	100.00%	10,840	LIN FT	$2.00		$21,680	
	CENTERLINE JT R&S	100.00%	21,680	LIN FT	$2.00		$43,360	
	PWFn =	0.5537		PW =	0.5537	X	$151,740	$84,015
YEAR 25								
	PAVEMENT PATCH CLASS B	3.00%	867	SQ YD	$150.00		$130,050	
	SHOULDER PATCH CLASS C	1.00%	0	SQ YD	$145.00		$0	
	PWFn =	0.4776		PW =	0.4776	X	$130,050	$62,113
YEAR 30	NON-INTERSTATE							
	PAVEMENT PATCH CLASS B	4.00%	1,156	SQ YD	$150.00		$173,400	
	SHOULDER PATCH CLASS C	1.50%	0	SQ YD	$145.00		$0	
	HMA POLICY OVERLAY 2.5" (PVMT)	100.00%	28,907	SQ YD	$10.94		$316,163	
	HMA POLICY OVERLAY 2.5" (SHLD)	100.00%	0	SQ YD	$10.36		$0	
	PWFn =	0.4120		PW =	0.4120	X	$489,563	$201,693
YEAR 35	NON-INTERSTATE							
	LONGITUDINAL SHLD JT R&S	100.00%	10,840	LIN FT	$2.00		$21,680	
	CENTERLINE JT R&S	100.00%	21,680	LIN FT	$2.00		$43,360	
	RANDOM CRACK R&S	50.00%	10,840	LIN FT	$2.00		$21,680	
	REFLECTIVE TRANSVERSE CRACK R&S	40.00%	6,931	LIN FT	$2.00		$13,862	
	PD PVMT PATCH M&F HMA 2.50"	0.10%	29	SQ YD	$81.62		$2,367	
	PWFn =	0.3554		PW =	0.3554	X	$102,949	$36,586
YEAR 40	NON-INTERSTATE							
	PAVEMENT PATCH CLASS B	0.50%	145	SQ YD	$150.00		$21,750	
	LONGITUDINAL SHLD JT R&S	100.00%	10,840	LIN FT	$2.00		$21,680	
	CENTERLINE JT R&S	100.00%	21,680	LIN FT	$2.00		$43,360	
	REFLECTIVE TRANSVERSE CRACK R&S	60.00%	10,397	LIN FT	$2.00		$20,794	
	RANDOM CRACK R&S	50.00%	10,840	LIN FT	$2.00		$21,680	
	PD PVMT PATCH M&F HMA 2.50"	0.50%	145	SQ YD	$81.62		$11,835	
	PWFn =	0.3066		PW =	0.3066	X	$141,099	$43,255
								$436,483
	ROUTINE MAINTENANCE ACTIVITY		4.11	Lane Miles	$0.00		$0	$0
					MAINTENANCE LIFE-CYCLE COST			$436,483
45	YEAR LIFE CYCLE	CRFn = 0.0407852			MAINTENANCE ANNUAL COST PER MILE			$17,342

LIFE-CYCLE COST ANALYSIS: NEW DESIGN

Calculated / Revised : 7/1/16 1:52 PM

			JPCP	HMA
CONSTRUCTION	INITIAL COST	PRESENT WORTH	$2,467,332	$1,782,595
		ANNUAL COST PER MILE	$98,031	$70,826
MAINTENANCE	LIFE-CYCLE COST	PRESENT WORTH	$436,483	$730,904
		ANNUAL COST PER MILE	$17,342	$29,040
TOTAL	LIFE-CYCLE COST	PRESENT WORTH	$2,903,815	$2,513,499
		ANNUAL COST PER MILE	$115,373	$99,866

LIFE-CYCLE COST ANALYSIS: FINAL SUMMARY

LOWEST COST OPTION	==========>	**HMA**	**$99,866**	
OTHER OPTIONS (LOWEST TO HIGHEST):	TYPE / PERCENTAGE	**JPCP**	**$115,373**	**15.5%**

O:\DEPP\GEN\WPDOCS\Pavement Designs\D-1\IL 56 [Butterfield Road] from Wolf Road to US 122045 07-06-16\IL 56 [Butterfield Road] from Wolf Road to US 12-2

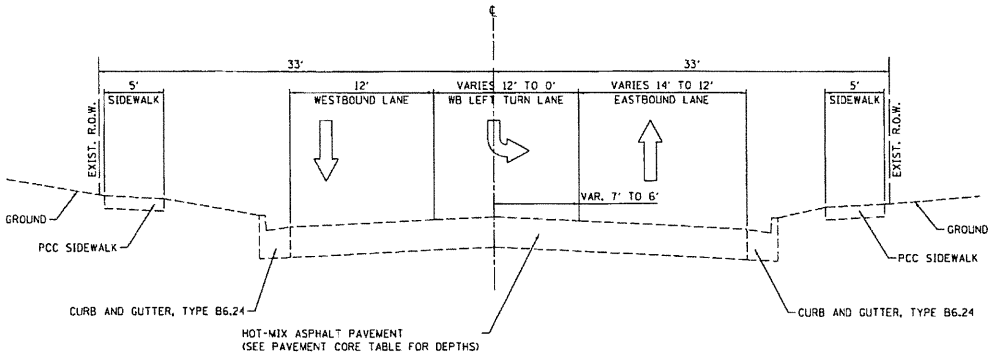

ILLINOIS ROUTE 56
(BUTTERFIELD ROAD)

EXISTING STA 66+42.72 TO 73+18.20

PAVEMENT CORES

STATION & OFFSET		PAVEMENT STRUCTURE
68+46	14' RT	3" HMA OVER 8" PCC
70+10	21' LT	4" HMA OVER 9" PCC
72+86	17' RT	8" HMA
74+46	6' RT	4" HMA OVER 8" PCC
80+50	3' RT	12" HMA
86+55	5' LT	12" HMA
92+49	5' RT	6" HMA

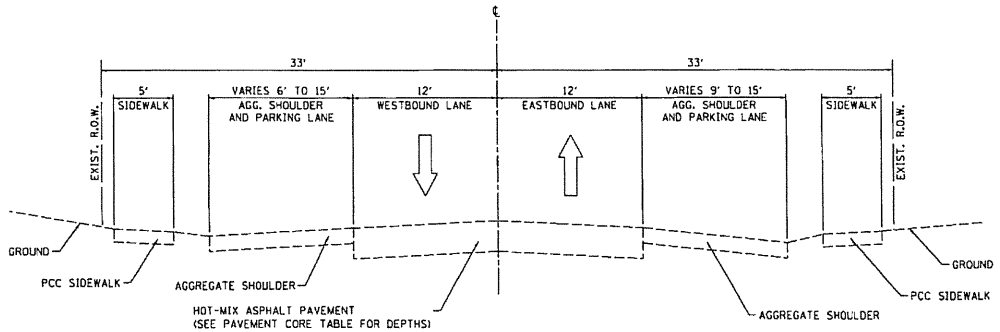

ILLINOIS ROUTE 56
(BUTTERFIELD ROAD)

EXISTING STA 73+18.20 TO 95+00

PRELIMINARY PLANS

TYP-01

FILE NAME =	USER NAME = GUILLBIGSS	DESIGNED -	REVISED -
		DRAWN - MCO	REVISED -
	PLOT SCALE = 10.0000 ' / in.	CHECKED -	REVISED -

STATE OF ILLINOIS
DEPARTMENT OF TRANSPORTATION

EXISTING TYPICAL SECTIONS

F.A.U. RTE.	SECTION	COUNTY	TOTAL SHEETS	SHEET NO.
3645	11-00047-00-FP	COOK	141	5
		CONTRACT NO. XXXXX		

© Copyright Hanson Professional Services Inc. 2015
HANSON Hanson Professional Services Inc.

HOT-MIX ASPHALT MIXTURE REQUIREMENTS		QUALITY MANAGEMENT PROGRAM (QMP)
MIXTURE TYPE	AIR VOIDS @ Ndes	
PAVEMENT RESURFACING		
HOT-MIX ASPHALT SURFACE COURSE, MIX "D", N70 (IL 9.5 mm), 2"	4% @ 70 Gyr.	
LEVELING BINDER (MACHINE METHOD), N70	4% @ 70 Gyr.	
FULL DEPTH PAVEMENT		
HOT-MIX ASPHALT SURFACE COURSE, MIX "D", N70 (IL 9.5 mm), 2"	4% @ 70 Gyr.	
HOT-MIX ASPHALT BINDER COURSE, IL-19.0, N70	4% @ 70 Gyr.	
TEMPORARY PAVEMENT		
HOT-MIX ASPHALT SURFACE COURSE, MIX "D", N70 (IL 9.5 mm), 2"	4% @ 70 Gyr.	
HOT-MIX ASPHALT BINDER COURSE, IL-19.0, N70	4% @ 70 Gyr.	
DRIVEWAYS		
HOT-MIX ASPHALT SURFACE COURSE, MIX "D", N50 (IL 9.5 mm), 2"	4% @ 50 Gyr.	
HOT-MIX ASPHALT BASE COURSE (HMA BINDER IL-19 mm), PE-6", CE-8"	4% @ 50 Gyr.	
PATH		
HOT-MIX ASPHALT SURFACE COURSE, MIX "D", N50 (IL 9.5 mm), 3"	4% @ 50 Gyr.	

NOTES FOR HMA MIXTURE REQUIREMENTS:

1. THE UNIT WEIGHT USED TO CALCULATE ALL HMA SURFACE MIXTURE QUANTITIES IS 112 LBS/SQ YD/IN.
2. THE "AC TYPE" FOR POLYMERIZED HMA MIXES SHALL BE "SBS/SBR PG 70-22," AND FOR NON-POLYMERIZED HMA, THE "TYPE" SHALL BE "PG 64-22" UNLESS MODIFIED BY DISTRICT ONE SPECIAL PROVISIONS. FOR USE OF RECYCLED MATERIALS, SEE DISTRICT ONE SPECIAL PROVISIONS.
3. TOTAL THICKNESS WILL VARY. SEE STANDARD SPECIFICATIONS FOR LIFT THICKNESSES. ANY CHANGES MUST BE CONSULTED WITH IDOT BUREAU OF MATERIALS.
4. CONTRACTOR MAY SUBSTITUTE PC CONCRETE TEMPORARY PAVEMENT IN PLACE OF HMA TEMPORARY PAVEMENT AT NO ADDITIONAL COST TO THE CONTRACT. PC CONCRETE TEMPORARY PAVEMENT SHALL CONSIST OF CLASS PV CONCRETE MEETING THE REQUIREMENTS OF ART. 1020 OF THE STANDARD SPECIFICATIONS.
5. BITUMINOUS MATERIALS (PRIME COAT) SHALL BE PLACED ON MILLED SURFACE AND BETWEEN LIFTS OF PROPOSED HMA AT THE RATES GIVEN IN THE STANDARD SPECIFICATIONS.

IL-RTE 56 (BUTTERFIELD RD)

STRUCTURAL DESIGN TRAFFIC: YEAR 2026

PV = 12,994 SU = 413 MU = 750

ROAD/STREET CLASSIFICATION: ARTERIAL (2-WAY) CLASS: II

PERCENT OF STRUCTURAL DESIGN TRAFFIC IN DESIGN LANE:

P = 50% S = 50% M = 50%

TRAFFIC FACTOR: ACTUAL TF = 1.81 AC TYPE = N/A

MINIMUM TF = 3.17

PG GRADE: BINDER = PG 64-22 SURFACE = N/A

SUBGRADE SUPPORT RATING:

SSR = IBR = 3 (POOR)

GENERAL NOTES:

1. SEE DRAINAGE PLANS FOR LOCATIONS OF PIPE UNDERDRAINS AND DRAINAGE STRUCTURES.
2. SEE CROSS SECTIONS FOR SIDE SLOPE AND DITCH DETAILS.
3. EROSION CONTROL BLANKET IS TO BE PLACED AS NEEDED ON SLOPES 1:3 AND STEEPER AND SHALL NOT BE PLACED ON FURROWED SLOPES. SEE EROSION AND SEDIMENT CONTROL SHEETS FOR LOCATIONS.

FILL SECTION

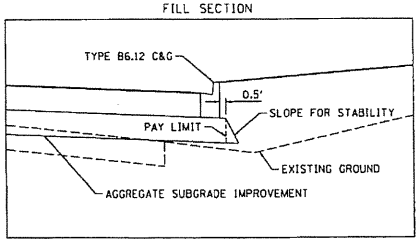

CUT SECTION

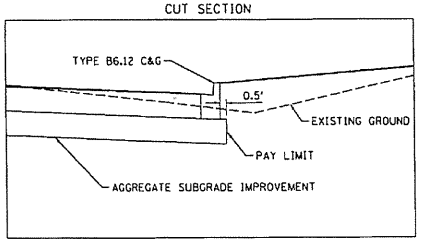

SUBGRADE PAY LIMIT DETAILS

SUBGRADE TO EXTEND 0.5' PAST BACK OF CURB/EDGE OF SHOULDER

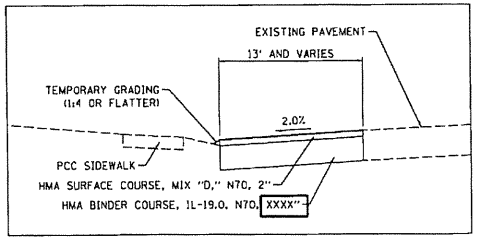

TEMPORARY PAVEMENT IN PLACE OF EXISTING AGGREGATE SHOULDERS

SEE PLANS FOR STATION AND PAY ITEM LIMITS

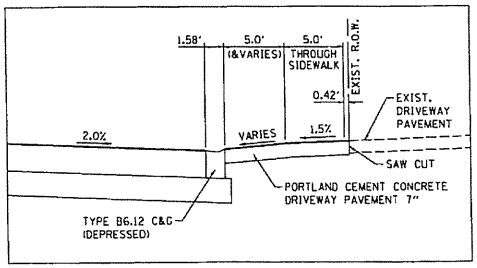

PCC ENTRANCE DETAIL

SEE PLANS FOR LOCATIONS AND GRADES

PRELIMINARY PLANS

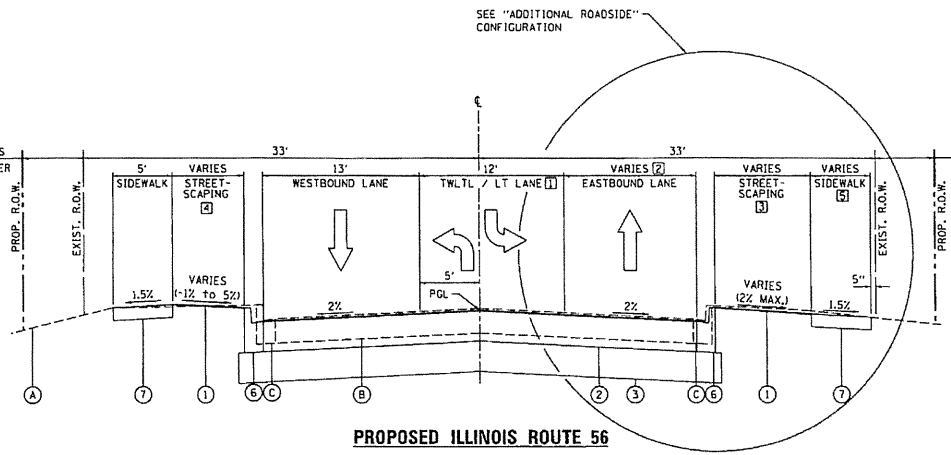

PROPOSED ILLINOIS ROUTE 56 (BUTTERFIELD ROAD)

STA 66+42.72 TO STA 69+66.85

INTERSECTION LIMITS NOT REPRESENTED BY TYPICAL:
STA 66+42.72 LT TO STA 66+84.82 LT
STA 66+42.72 RT TO STA 66+58.87 RT
STA 69+38.89 LT TO STA 69+66.85 LT
STA 69+08.29 RT TO STA 69+66.85 RT

[1] LEFT TURN LANE / TWLTL
STA 66+75.00 TO 67+97.00 = WB LT LANE AT WOLF RD.
STA 67+97.00 TO 68+77.00 = 80' "TAPER" (GAP)
STA 68+77.00 TO 69+27.00 = TWLWL

[2] LANE WIDTH:
STA 66+58.87 TO STA 67+55.00 = 17.0'
STA 67+55.00 TO STA 69+05.00 = TAPERS 17.0' TO 11.0'
STA 69+05.00 TO STA 69+08.29 = 11.0'

[3] STREETSCAPE WIDTH:
STA 66+58.87 TO STA 67+96.14 = 0.0'
STA 67+96.14 TO STA 69+05.00 = VARIES 3.8' TO 8.0'
STA 69+05.00 TO STA 69+08.29 = 8.0'

[4] STREETSCAPE WIDTH:
STA 66+84.82 TO STA 68+66.00 = 5.0'
STA 68+66.00 TO STA 68+85.00 = TAPERS 5.0' TO 8.0'
STA 68+85.00 TO STA 69+38.89 = 8.0'

[5] SIDEWALK WIDTH:
STA 66+58.87 TO STA 67+55.00 = 7.0'
STA 67+55.00 TO STA 67+65.08 = VARIES 7.0' TO 7.4'
STA 67+65.08 TO STA 68+76.11 = 5.0'
STA 68+76.11 TO STA 69+08.29 = VARIES 5.0' TO 13.0'

NOTES:

1. SIDEWALK CROSS SLOPES SHALL NOT EXCEED 2%. AT LOCATIONS WHERE THE SIDEWALK MEETS THE BACK OF CURB, IT MAY BE NECESSARY TO INCLUDE A BREAK IN THE SIDEWALK GRADE SO THAT AT THE 5' IN WIDTH CLOSEST TO THE RIGHT-OF-WAY LINE HAS A CROSS SLOPE NOT EXCEEDING 2%.

EXISTING LEGEND:

- (A) GROUND
- (B) PAVEMENT, HOT MIX ASHPALT
- (C) CONCRETE CURB & GUTTER, TYPE B6.12
- (D) PCC SIDEWALK
- (X) PLACEHOLDER
- (X) PLACEHOLDER
- (X) PLACEHOLDER
- (X) PLACEHOLDER
- (X) PLACEHOLDER
- (X) PLACEHOLDER

PROPOSED LEGEND:

- (1) GROUND
- (2) BITUMINOUS MATERIALS (PRIME COAT)
- (3) AGGREGATE SUBGRADE IMPROVEMENT 12"
- (4) HOT MIX ASPHALT SURFACE COURSE, MIX "C," N70, 11"2"
- (5) HOT MIX ASPHALT BINDER COURSE, IL-19.0, N70, 21"2"
- (6) COMBINATION CONCRETE CURB AND GUTTER, TYPE B6.12
- (7) PORTLAND CEMENT CONCRETE SIDEWALK, 5"
- (8) CONCRETE DEPRESSED CURB, TYPE B
- (9) COMBINATION CONCRETE CURB, TYPE B6.12, REVERSE PITCH
- (10) MULTI-USE PATH, PORTLAND CEMENT CONCRETE / HOT MIX ASPHALT
- (X) GEOTECHNICAL REINFORCEMENT
- (X) TOPSOIL FURNISH AND PLACE 4"
- (X) EMBANKMENT
- (X) PIPE UNDERDRAINS
- (X) AGGREGATE BASE COURSE, TYPE A, 6"
- (X) GEOTECHNICAL FABRIC FOR GROUND STABILIZATION
- (X) PLACEHOLDER
- (X) PLACEHOLDER
- (X) PLACEHOLDER
- (X) PLACEHOLDER
- (X) PLACEHOLDER
- (X) PLACEHOLDER

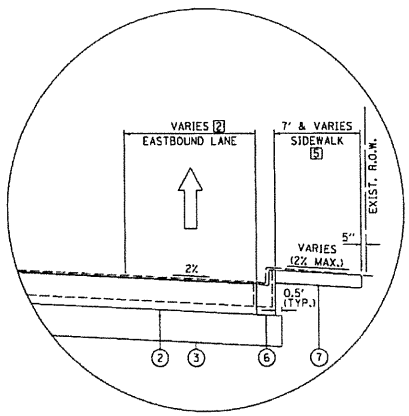

ADDITIONAL ROADSIDE

STA 66+58.87 RT TO STA 67+65.08 RT

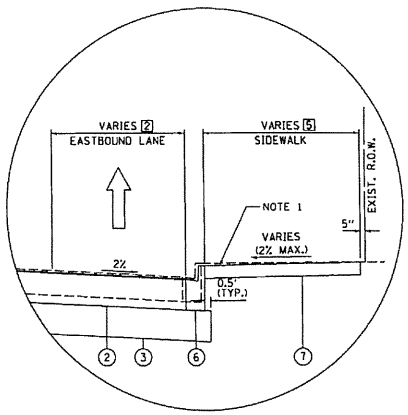

ADDITIONAL ROADSIDE

STA 68+83.29 RT TO STA 69+08.29 RT

PRELIMINARY PLANS

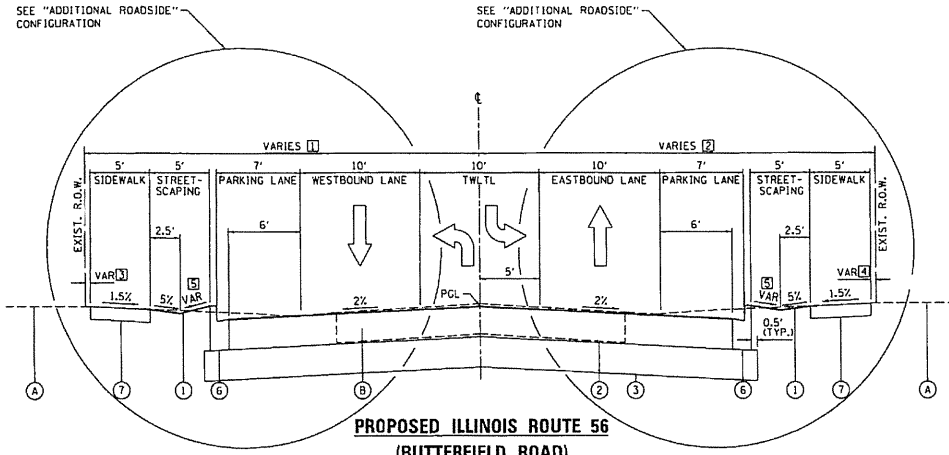

PROPOSED ILLINOIS ROUTE 56
(BUTTERFIELD ROAD)

STA 69+50.00 TO STA 96+XX.XX

INTERSECTION LIMITS (NOT REPRESENTED BY TYPICAL):

LEFT SIDE	RIGHT SIDE
STA 69+66.85 LT TO 70+27.04 LT	STA 69+66.85 RT TO 69+97.78 RT
STA 72+91.28 LT TO 73+69.73 LT	STA 72+67.23 RT TO 73+46.67 RT
STA 76+40.48 LT TO 77+19.46 LT	STA 76+16.05 RT TO 76+94.69 RT
STA 79+92.24 LT TO 80+70.55 LT	STA 79+65.80 RT TO 80+43.73 RT
STA 83+42.47 LT TO 84+20.90 LT	STA 83+15.61 RT TO 83+94.42 RT
STA 86+91.93 LT TO 87+70.25 LT	STA 86+65.46 RT TO 87+44.56 RT
STA 90+41.02 LT TO 91+19.75 LT	STA 90+15.82 RT TO 90+94.68 RT
	STA 93+64.81 RT TO 94+43.50 RT

[1] LEFT ROW:
STA 69+66.85 TO 79+92.24 = 33.00'
STA 80+70.55 TO 83+42.47 = VARIES 32.80' TO 32.76'
STA 84+20.90 TO 86+91.93 = VARIES 32.75' TO 32.71'
STA 87+70.25 TO 90+41.02 = VARIES 32.70' TO 32.66'
STA 91+19.75 TO 93+92.96 = VARIES 32.65' TO 32.61'
STA 93+92.96 TO 94+28.93 = VARIES 32.61' TO 144.67'
STA 94+28.93 TO 94+62.47 = VARIES 144.67' TO 128.79'
STA 94+62.47 TO 96+66.68 = VARIES 33.20' TO 33.00'

[2] RIGHT ROW:
STA 69+68.85 TO 93+64.81 = 33.00'
STA 94+43.50 TO 97+21.46 = VARIES 32.70' TO 33.00'

[3] LEFT BACK OF SIDEWALK TO ROW:
STA 69+66.85 TO 79+92.24 = 0.42'
STA 80+70.55 TO 83+42.47 = VARIES 0.22' TO 0.18'
STA 84+20.90 TO 86+91.93 = VARIES 0.17' TO 0.13'
STA 87+70.25 TO 90+41.02 = VARIES 0.12' TO 0.08'
STA 91+19.75 TO 93+92.96 = VARIES 1.07' TO 1.03'
STA 93+92.96 TO 94+28.93 = VARIES 1.03' TO 113.09'
STA 94+28.93 TO 94+62.47 = VARIES 113.09' TO 97.21'
STA 94+62.47 TO 96+66.68 = VARIES 1.62' TO 1.42'

[4] RIGHT BACK OF SIDEWALK TO ROW:
STA 69+68.85 TO 93+64.81 = 0.42'
STA 94+43.50 TO 97+21.46 = VARIES 0.70' TO 1.00'

[5] PARKWAY SWALE FORESLOPE:
MIN. 0.50%; MAX 25.0%

SHOULD WE SHOW EXIST.

SIDEWALKS

OR AGG. SHOULDERS

EXISTING LEGEND:

(A) GROUND
(B) PAVEMENT, HOT MIX ASHPALT
(C) CONCRETE CURB & GUTTER, TYPE B6.12
(D) PCC SIDEWALK
(X) PLACEHOLDER
(X) PLACEHOLDER
(X) PLACEHOLDER
(X) PLACEHOLDER
(X) PLACEHOLDER
(X) PLACEHOLDER
(X) PLACEHOLDER

PROPOSED LEGEND:

(1) GROUND
(2) BITUMINOUS MATERIALS (PRIME COAT)
(3) AGGREGATE SUBGRADE IMPROVEMENT 12"
(4) HOT MIX ASPHALT SURFACE COURSE, MIX "C," N70, 11"2"
(5) HOT MIX ASPHALT BINDER COURSE, IL-19.0, N70, 21"2"
(6) COMBINATION CONCRETE CURB AND GUTTER, TYPE B6.12
(7) PORTLAND CEMENT CONCRETE SIDEWALK, 5"
(8) CONCRETE DEPRESSED CURB, TYPE B
(9) COMBINATION CONCRETE CURB, TYPE B6.12, REVERSE PITCH
(10) MULTI-USE PATH, PORTLAND CEMENT CONCRETE / HOT MIX ASPHALT
(X) GEOTECHNICAL REINFORCEMENT
(X) TOPSOIL FURNISH AND PLACE 4"
(X) EMBANKMENT
(X) PIPE UNDERDRAINS
(X) AGGREGATE BASE COURSE, TYPE A, 6"
(X) GEOTECHNICAL FABRIC FOR GROUND STABILIZATION
(X) PLACEHOLDER
(X) PLACEHOLDER
(X) PLACEHOLDER
(X) PLACEHOLDER
(X) PLACEHOLDER
(X) PLACEHOLDER

NOTES:

1. PLACEHOLDER
2. PLACEHOLDER
3. PLACEHOLDER

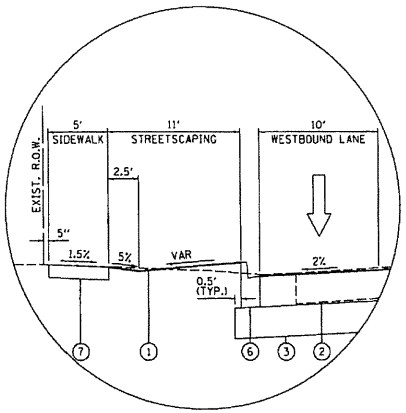

ADDITIONAL ROADSIDE

STA 72+70.86 TO STA 72+91.28 LT
STA 73+69.73 TO STA 73+90.15 LT
STA 76+20.42 TO STA 76+40.84 LT
STA 79+71.83 TO STA 79+92.24 LT
STA 83+22.05 TO STA 83+42.47 LT
STA 84+20.90 TO STA 84+41.31 LT
STA 86+71.52 TO STA 86+91.93 LT
STA 87+70.25 TO STA 87+90.67 LT
STA 90+20.61 TO STA 90+41.02 LT

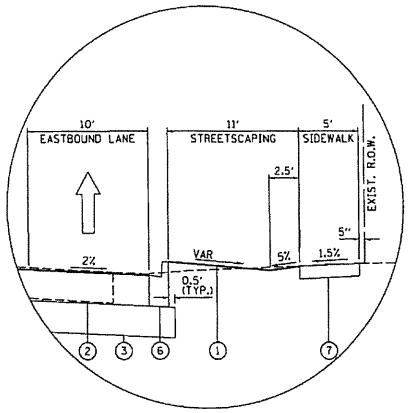

ADDITIONAL ROADSIDE

STA 69+97.78 TO STA 70+29.31 RT
STA 75+95.63 TO STA 76+16.05 RT
STA 80+43.73 TO STA 80+64.14 RT
STA 82+95.20 TO STA 83+15.61 RT
STA 83+94.42 TO STA 84+14.83 RT
STA 86+45.04 TO STA 86+65.46 RT
STA 87+44.56 TO STA 87+64.56 RT
STA 90+94.68 TO STA 91+14.68 RT
STA 93+44.81 TO STA 93+64.81 RT

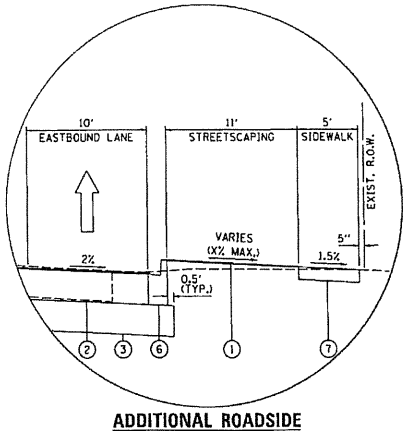

ADDITIONAL ROADSIDE

STA 72+40.81 RT TO STA 72+67.23 RT
STA 73+46.67 RT TO STA 73+67.08 RT
STA 76+94.69 RT TO STA 77+15.10 RT

PRELIMINARY PLANS

TYP-04

FILE NAME =	USER NAME = QUILL81655	DESIGNED -	REVISED -
D180888-sht-typ-01.dgn		DRAWN - MCO	REVISED -
	PLOT SCALE = 10.0000 ' / in.	CHECKED -	REVISED -

STATE OF ILLINOIS
DEPARTMENT OF TRANSPORTATION

PROPOSED TYPICAL SECTIONS

F.A.U. RTE.	SECTION	COUNTY	TOTAL SHEETS	SHEET NO.
3645	11-00047-00-FP	COOK	141	8
		CONTRACT NO. XXXXX		

ISSUED	MCO	12/7/15
DRAWN		
REVIEWED		

PLAN: DEPARTED, PLOTTED, NOTE BOOK, NO.
PROFILE: DEPARTED, PLOTTED, NOTE BOOK, NO.
DATE

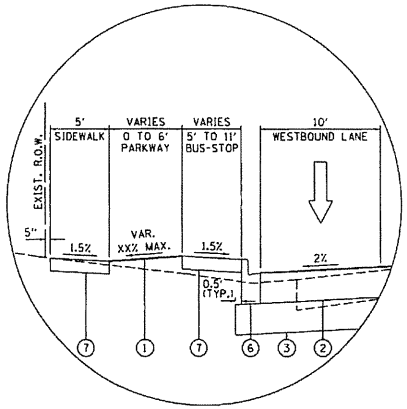

ADDITIONAL ROADSIDE

STA 70+27.04 TO STA 70+55.97
STA 80+70.55 TO STA 80+99.48
STA 91+19.75 TO STA 91+47.68

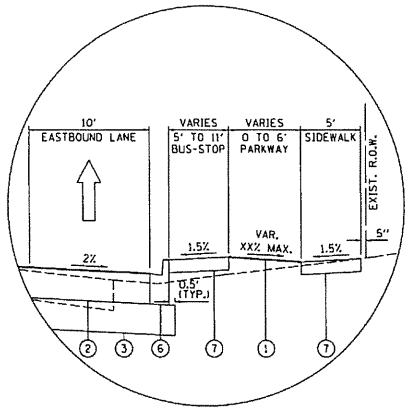

ADDITIONAL ROADSIDE

STA 79+36.87 TO STA 79+65.80
STA 89+86.89 TO STA 90+99.48

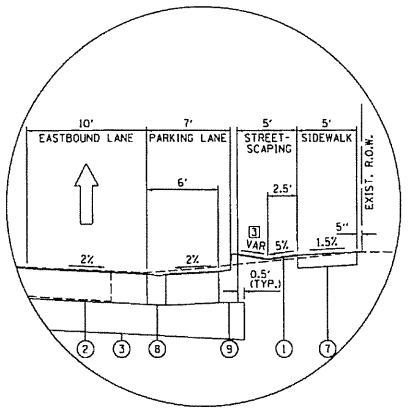

ADDITIONAL ROADSIDE

STA 87+64.56 RT TO STA 89+90.58 RT
STA 91+14.68 RT TO STA 93+44.81 RT

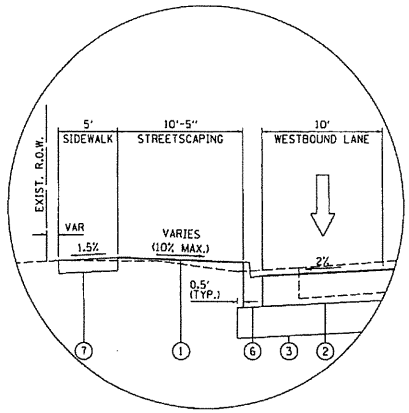

ADDITIONAL ROADSIDE

STA 92+80 LT TO STA 94+50 LT

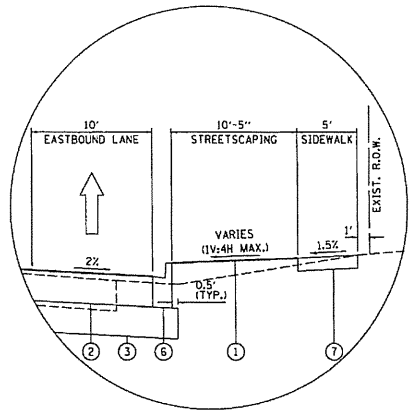

ADDITIONAL ROADSIDE

STA 94+44 RT TO STA 96+XX RT

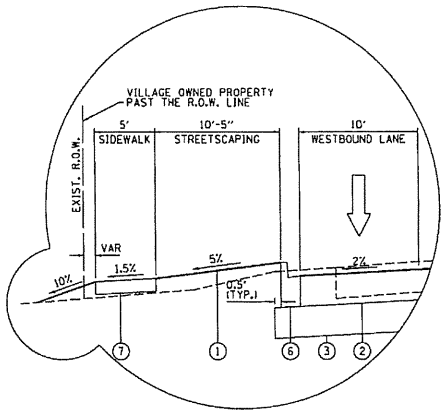

ADDITIONAL ROADSIDE

STA 94+50 LT TO STA 96+XX LT

EXISTING LEGEND:

- (A) GROUND
- (B) PAVEMENT, HOT MIX ASHPALT
- (C) CONCRETE CURB & GUTTER, TYPE B6.12
- (D) PCC SIDEWALK
- (X) PLACEHOLDER
- (X) PLACEHOLDER
- (X) PLACEHOLDER
- (X) PLACEHOLDER
- (X) PLACEHOLDER
- (X) PLACEHOLDER

PROPOSED LEGEND:

- (1) GROUND
- (2) BITUMINOUS MATERIALS (PRIME COAT)
- (3) AGGREGATE SUBGRADE IMPROVEMENT 12"
- (4) HOT MIX ASPHALT SURFACE COURSE, MIX "C," N70, 11*2"
- (5) HOT MIX ASPHALT BINDER COURSE, IL-19.0, N70, 21*2"
- (6) COMBINATION CONCRETE CURB AND GUTTER, TYPE B6.12
- (7) PORTLAND CEMENT CONCRETE SIDEWALK, 5"
- (8) CONCRETE DEPRESSED CURB, TYPE B
- (9) COMBINATION CONCRETE CURB, TYPE B6.12, REVERSE PITCH
- (10) MULTI-USE PATH, PORTLAND CEMENT CONCRETE / HOT MIX ASPHALT
- (X) GEOTECHNICAL REINFORCEMENT
- (X) TOPSOIL FURNISH AND PLACE 4"
- (X) EMBANKMENT
- (X) PIPE UNDERDRAINS
- (X) AGGREGATE BASE COURSE, TYPE A, 6"
- (X) GEOTECHNICAL FABRIC FOR GROUND STABILIZATION
- (X) PLACEHOLDER
- (X) PLACEHOLDER
- (X) PLACEHOLDER
- (X) PLACEHOLDER
- (X) PLACEHOLDER
- (X) PLACEHOLDER

NOTES:

1. PLACEHOLDER
2. PLACEHOLDER
3. PLACEHOLDER

PRELIMINARY PLANS

© Copyright Hanson Professional Services Inc. 2015
HANSON
Hanson Professional Services Inc.

PLAN — SURVEYED | DRAWN | CHECKED | DESIGNED | QUANTITIES CHECKED | STRUCTURE ADDITIONS DATED | NOTE BOOK | NO. | DATE | BY

PROFILE — SURVEYED | DRAWN | CHECKED | DESIGNED | QUANTITIES CHECKED | STRUCTURE ADDITIONS DATED | NOTE BOOK | NO. | DATE | BY

SIGNED | DWN | VIEWED | MCD | 12/7/15

FILE NAME : D1800B0-sht-typ-05.dgn

USER NAME = CLILLIB655 | DESIGNED - | REVISED -
DRAWN - MCD | REVISED -
PLOT SCALE = 1.0000 ' / in. | CHECKED - | REVISED -

STATE OF ILLINOIS
DEPARTMENT OF TRANSPORTATION

PROPOSED TYPICAL SECTIONS

TYP-05

F.A.U. RTE.	SECTION	COUNTY	TOTAL SHEETS	SHEET NO.
3645	11-00047-00-FP	COOK	141	9
		CONTRACT NO. XXXXX		

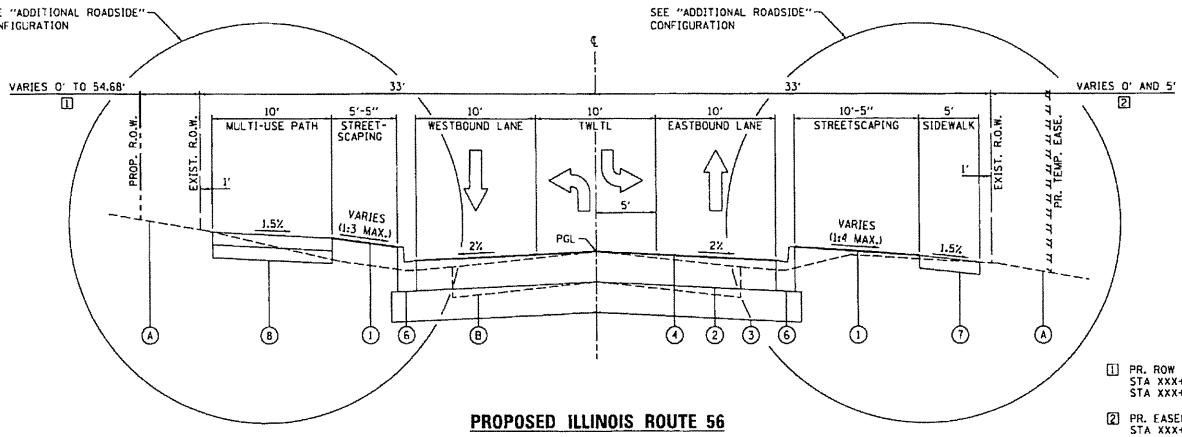

PROPOSED ILLINOIS ROUTE 56
(BUTTERFIELD ROAD)

STA 96+10.00 TO STA 108+87.24

INTERSECTION LIMITS (NOT REPRESENTED BY TYPICAL):
STA 97+19.26 RT TO 97+94.74 RT
STA 104+37.97 LT TO 105+16.67 LT
STA 107+62.07 RT TO 108+44.37 RT
107+86.63 LT TO 108+65.27 LT

[1] PR. ROW WIDTH
STA XXX+XX.XX TO XXX+XX.XX = XX.XX
STA XXX+XX.XX TO XXX+XX.XX = XX.XX

[2] PR. EASEMENT WIDTH
STA XXX+XX.XX TO XXX+XX.XX = XX.XX
STA XXX+XX.XX TO XXX+XX.XX = XX.XX

EXISTING LEGEND:

- (A) GROUND
- (B) PAVEMENT, HOT MIX ASHPALT
- (C) CONCRETE CURB & GUTTER, TYPE B6.12
- (D) PCC SIDEWALK
- (X) PLACEHOLDER
- (X) PLACEHOLDER
- (X) PLACEHOLDER
- (X) PLACEHOLDER
- (X) PLACEHOLDER
- (X) PLACEHOLDER

PROPOSED LEGEND:

- (1) GROUND
- (2) BITUMINOUS MATERIALS (PRIME COAT)
- (3) AGGREGATE SUBGRADE IMPROVEMENT 12"
- (4) HOT MIX ASPHALT SURFACE COURSE, MIX "C," N70, 11"2"
- (5) HOT MIX ASPHALT BINDER COURSE, IL-19.0, N70, 2"2"
- (6) COMBINATION CONCRETE CURB AND GUTTER, TYPE B6.12
- (7) PORTLAND CEMENT CONCRETE SIDEWALK, 5"
- (8) MULTI-USE PATH, PORTLAND CEMENT CONCRETE / HOT MIX ASPHALT
- (9) GEOTECHNICAL REINFORCEMENT
- (10) TOPSOIL FURNISH AND PLACE 4"
- (X) EMBANKMENT
- (X) PIPE UNDERDRAINS
- (X) AGGREGATE BASE COURSE, TYPE A, 6"
- (X) GEOTECHNICAL FABRIC FOR GROUND STABILIZATION
- (X) PLACEHOLDER
- (X) PLACEHOLDER
- (X) PLACEHOLDER
- (X) PLACEHOLDER
- (X) PLACEHOLDER
- (X) PLACEHOLDER
- (X) PLACEHOLDER
- (X) PLACEHOLDER

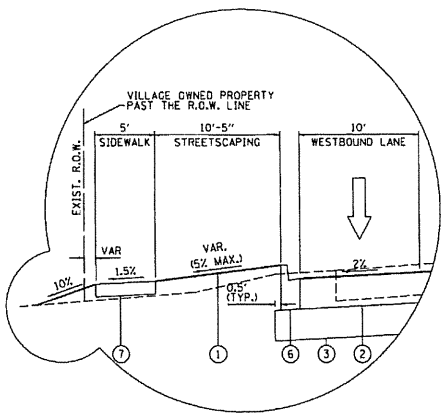

ADDITIONAL ROADSIDE
STA 96+XX LT TO STA 96+35.14 LT

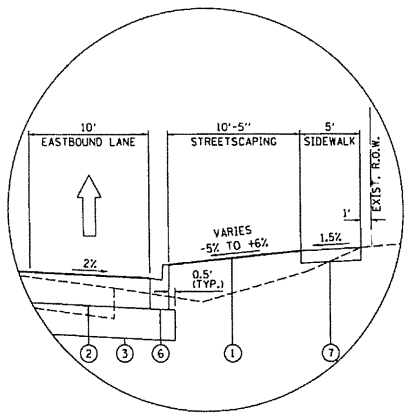

ADDITIONAL ROADSIDE
STA 96+XX RT TO STA 96+35.14 RT
STA 105+50 TO STA 107+62.07 RT

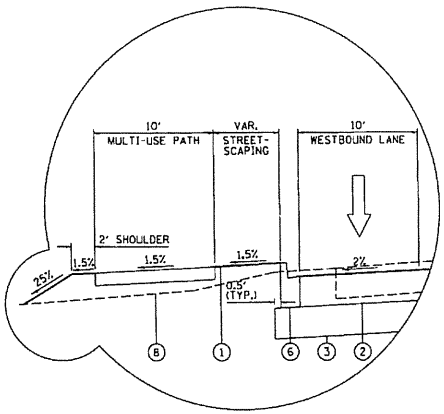

ADDITIONAL ROADSIDE
STA 96+35.14 LT TO STA 97+30.00 LT

NOTES:

1. PLACEHOLDER
2. PLACEHOLDER
3. PLACEHOLDER

PRELIMINARY PLANS

FILE NAME =	USER NAME = QUILLBIGSS	DESIGNED -	REVISED -
D:\0000D-sht-typ-07.dgn		DRAWN - MCO	REVISED -
	PLOT SCALE = 10.0000 ' / in.	CHECKED -	REVISED -

STATE OF ILLINOIS
DEPARTMENT OF TRANSPORTATION

PROPOSED TYPICAL SECTIONS

TYP-07

F.A.U. RTE.	SECTION	COUNTY	TOTAL SHEETS	SHEET NO.
3645	11-00047-00-FP	COOK	84	7
		CONTRACT NO. XXXXX		

PLAN — DRAFTED — CHECKED — QC/QA — HOT BOX NO. — DATE — BY
PROFILE — DRAFTED — CHECKED — QC/QA — HOT BOX NO. — DATE — BY
ORIGINAL — MCO — 12/1/15
REVISED

HANSON Professional Services Inc.

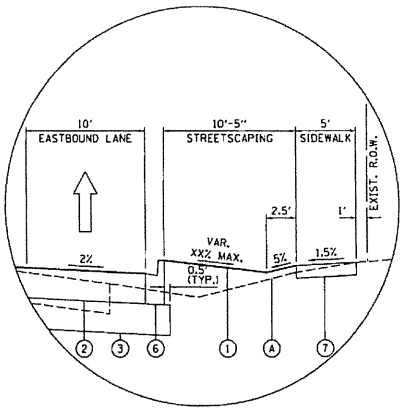

ADDITIONAL ROADSIDE
STA 96+35.14 RT TO STA 97+18.21 RT
STA 103+90.58 RT TO STA 104+32.83 RT
STA 108+44.55 RT TO STA 108+87.24 RT

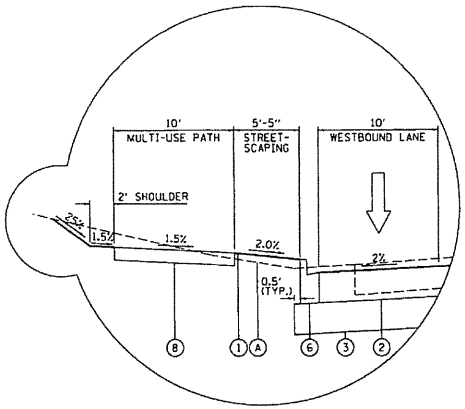

ADDITIONAL ROADSIDE
STA 97+30.00 LT TO STA 98+00.00 LT

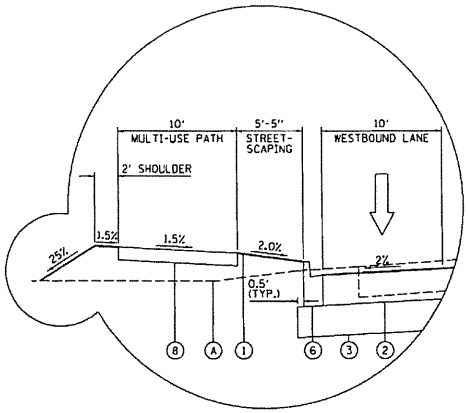

ADDITIONAL ROADSIDE
STA 101+00.00 LT TO STA 102+20.00 LT

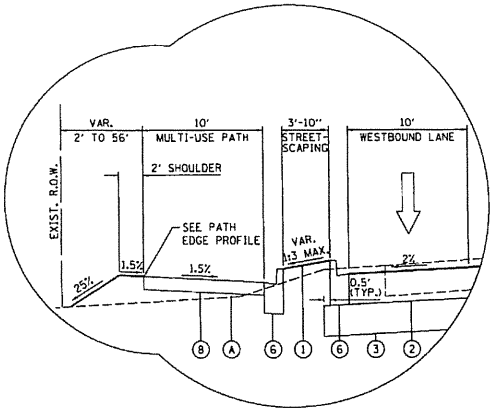

ADDITIONAL ROADSIDE
STA 102+20.00 LT TO STA 102+95.00 LT

EXISTING LEGEND:

- (A) GROUND
- (B) PAVEMENT, HOT MIX ASHPALT
- (C) CONCRETE CURB & GUTTER, TYPE B6.12
- (D) PCC SIDEWALK
- (X) PLACEHOLDER
- (X) PLACEHOLDER
- (X) PLACEHOLDER
- (X) PLACEHOLDER
- (X) PLACEHOLDER
- (X) PLACEHOLDER

PROPOSED LEGEND:

- (1) GROUND
- (2) BITUMINOUS MATERIALS (PRIME COAT)
- (3) AGGREGATE SUBGRADE IMPROVEMENT 12"
- (4) HOT MIX ASPHALT SURFACE COURSE, MIX "C," N70, 11*2"
- (5) HOT MIX ASPHALT BINDER COURSE, IL-19.0, N70, 21*2"
- (6) COMBINATION CONCRETE CURB AND GUTTER, TYPE B6.12
- (7) PORTLAND CEMENT CONCRETE SIDEWALK, 5"
- (8) MULTI-USE PATH, PORTLAND CEMENT CONCRETE / HOT MIX ASPHALT
- (9) GEOTECHNICAL REINFORCEMENT
- (10) TOPSOIL FURNISH AND PLACE 4"
- (X) EMBANKMENT
- (X) PIPE UNDERDRAINS
- (X) AGGREGATE BASE COURSE, TYPE A, 6"
- (X) GEOTECHNICAL FABRIC FOR GROUND STABILIZATION
- (X) PLACEHOLDER
- (X) PLACEHOLDER
- (X) PLACEHOLDER
- (X) PLACEHOLDER
- (X) PLACEHOLDER
- (X) PLACEHOLDER
- (X) PLACEHOLDER
- (X) PLACEHOLDER

NOTES:

1. PLACEHOLDER
2. PLACEHOLDER
3. PLACEHOLDER

PRELIMINARY PLANS

TYP-08

FILE NAME = D100069-sht-typ-08.dgn	USER NAME = QUILL01655	DESIGNED -	REVISED -	STATE OF ILLINOIS DEPARTMENT OF TRANSPORTATION	PROPOSED TYPICAL SECTIONS	F.A.U. RTE.	SECTION	COUNTY	TOTAL SHEETS	SHEET NO.
		DRAWN - MCO	REVISED -			3645	11-00047-00-FP	COOK	84	8
	PLOT SCALE = 10.0000 ' / in.	CHECKED -	REVISED -					CONTRACT NO. XXXXX		

PLAN: SURVEYED / PLOTTED / ALIGNMENT CHECKED / RT. OF WAY CHECKED / CADD FILE NAME / NOTE BOOK NO. / BY / DATE

PROFILE: SURVEYED / PLOTTED / GRADES CHECKED / B.M. NOTED / STRUCTURE NOTATIONS CHKD / NOTE BOOK NO. / BY / DATE

HANSON
Hanson Professional Services Inc.

© Copyright Hanson Professional Services Inc. 2014

DESIGNED MCO 12/1/15
DRAWN MCO
REVISED

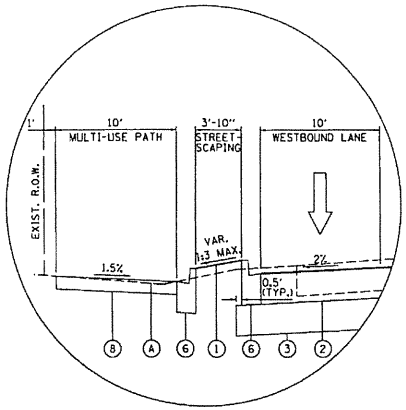

ADDITIONAL ROADSIDE
STA 102+95.00 LT TO STA 103+20.00 LT

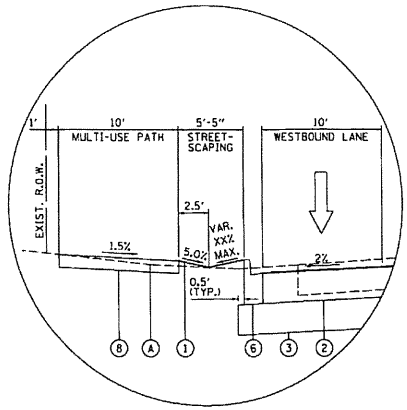

ADDITIONAL ROADSIDE
STA 103+90.00 LT TO STA 104+38.18 LT
STA 105+16.66 LT TO STA 105+59.95 LT
STA 108+44.55 LT TO STA 108+87.24 LT

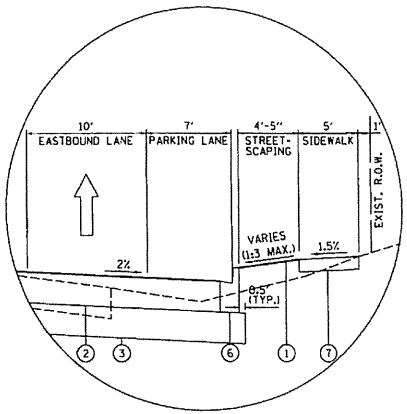

ADDITIONAL ROADSIDE
STA 104+32.83 TO STA 105+50.00

EXISTING LEGEND:

- (A) GROUND
- (B) PAVEMENT, HOT MIX ASHPALT
- (C) CONCRETE CURB & GUTTER, TYPE B6.12
- (D) PCC SIDEWALK
- (X) PLACEHOLDER
- (X) PLACEHOLDER
- (X) PLACEHOLDER
- (X) PLACEHOLDER
- (X) PLACEHOLDER
- (X) PLACEHOLDER

PROPOSED LEGEND:

- (1) GROUND
- (2) BITUMINOUS MATERIALS (PRIME COAT)
- (3) AGGREGATE SUBGRADE IMPROVEMENT 12"
- (4) HOT MIX ASPHALT SURFACE COURSE, MIX "C," N70, 11"2"
- (5) HOT MIX ASPHALT BINDER COURSE, IL-19.0, N70, 21"2"
- (6) COMBINATION CONCRETE CURB AND GUTTER, TYPE B6.12
- (7) PORTLAND CEMENT CONCRETE SIDEWALK, 5"
- (8) MULTI-USE PATH, PORTLAND CEMENT CONCRETE / HOT MIX ASPHALT
- (9) GEOTECHNICAL REINFORCEMENT
- (10) TOPSOIL FURNISH AND PLACE 4"
- (X) EMBANKMENT
- (X) PIPE UNDERDRAINS
- (X) AGGREGATE BASE COURSE, TYPE A, 6"
- (X) GEOTECHNICAL FABRIC FOR GROUND STABILIZATION
- (X) PLACEHOLDER
- (X) PLACEHOLDER
- (X) PLACEHOLDER
- (X) PLACEHOLDER
- (X) PLACEHOLDER
- (X) PLACEHOLDER
- (X) PLACEHOLDER
- (X) PLACEHOLDER

NOTES:

1. PLACEHOLDER
2. PLACEHOLDER
3. PLACEHOLDER

PRELIMINARY PLANS

© Copyright Hanson Professional Services Inc. 2016

HANSON
Hanson Professional Services Inc.

PLAN — NOTE BOOK NO. — SURVEYED — PLOTTED — ALIGNMENT CHECKED — RT. OF WAY CHECKED — CADD FILE NAME — BY — DATE

PROFILE — NOTE BOOK NO. — SURVEYED — PLOTTED — GRADES CHECKED — BILL NOTED — STRUCTURE NOTATIONS CHKD — BY — DATE

FILE NAME = D100000-sht-typ-09.dgn	USER NAME = DUILL01655	DESIGNED -	REVISED -
		DRAWN - MCO	REVISED -
	PLOT SCALE = 10.0000 ' / in.	CHECKED -	REVISED -

STATE OF ILLINOIS
DEPARTMENT OF TRANSPORTATION

PROPOSED TYPICAL SECTIONS

TYP-09

F.A.U. RTE.	SECTION	COUNTY	TOTAL SHEETS	SHEET NO.
3645	11-00047-00-FP	COOK	84	9
		CONTRACT NO. XXXXX		

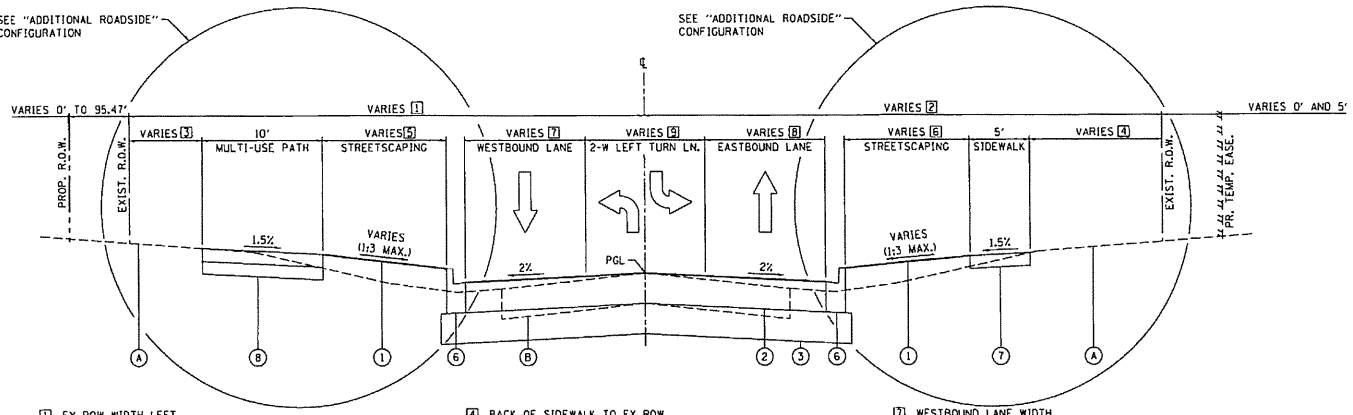

1 EX ROW WIDTH LEFT
STA 108+87.24 LT TO 111+21.25 LT = VARIES 33.00' TO 69.10'
STA 111+21.25 LT TO 111+87.24 LT = N/A (EXIST. GRANVILLE AVE)
STA 111+87.24 LT TO 112+86.19 LT = VARIES 89.08' TO 118.94'
STA 112+86.19 LT TO 113+00.00 LT = 50.00'

2 EX ROW WIDTH RIGHT
STA 108+87.24 RT TO 109+46.47 RT = VARIES 33.00' TO 31.08'
STA 109+46.47 RT TO 111+19.21 RT = VARIES 31.08' TO 49.98'
STA 111+19.21 RT TO 111+85.54 RT = N/A (EXIST. GRANVILLE AVE)
STA 111+85.54 RT TO 113+00.00 RT = 50.00'

3 BACK OF MU PATH TO EX ROW
STA 108+87.24 LT TO 111+21.25 LT = VARIES 1.00' TO 31.09'
STA 111+21.25 LT TO 111+87.24 LT = N/A (EXIST. GRANVILLE AVE)
STA 111+87.24 LT TO 112+86.19 LT = VARIES 48.46' TO 74.18'
STA 112+86.19 LT TO 113+00.00 LT = VARIES 5.24' TO 4.77'

4 BACK OF SIDEWALK TO EX ROW
STA 108+87.24 RT TO 109+46.39 RT = 1.00'
STA 109+46.39 RT TO 110+08.75 RT = VARIES 1.00' TO 10.00'
STA 110+08.75 RT TO 113+00.00 RT = 10.00'

5 STREETSCAPING WIDTH LEFT
STA 108+87.24 LT TO 113+00.00 LT = VARIES 5.42' TO 15.64'

6 STREETSCAPING WIDTH RIGHT
STA 108+87.24 RT TO 111+09.84 RT = VARIES 10.42' TO 18.29'
STA 111+94.77 RT TO 113+00.00 RT = 15.42'

7 WESTBOUND LANE WIDTH
STA 108+87.24 TO 111+25.00 = 10.00'
STA 111+25.00 TO 112+30.00 = VARIES 10.00' TO 12.00'
STA 112+30.00 TO 113+00.00 = 12.00'

8 EASTBOUND LANE WIDTH
STA 108+87.24 TO 111+25.00 = 10.00'
STA 111+25.00 TO 111+94.77 = VARIES 10.00' TO 12.00'
STA 111+94.77 TO 113+00.00 = 12.00'

9 TWLTL WIDTH
STA 108+87.24 TO 111+25.00 = 10.00'
STA 111+25.00 TO 112+30.00 = VARIES 10.00' TO 12.00'
STA 112+30.00 TO 113+00.00 = 12.00'

PROPOSED ILLINOIS ROUTE 56
(WASHINGTON BOULEVARD)

STA 108+87.24 TO STA 113+00.00

INTERSECTION LIMITS (NOT REPRESENTED BY TYPICAL):
STA 111+10.07 RT TO STA 111+94.77 RT

NOTES:

1. PLACEHOLDER
2. PLACEHOLDER
3. PLACEHOLDER

EXISTING LEGEND:

- (A) GROUND
- (B) PAVEMENT, HOT MIX ASHPALT
- (C) CONCRETE CURB & GUTTER, TYPE B6.12
- (D) PCC SIDEWALK
- (X) PLACEHOLDER
- (X) PLACEHOLDER
- (X) PLACEHOLDER
- (X) PLACEHOLDER
- (X) PLACEHOLDER
- (X) PLACEHOLDER

PROPOSED LEGEND:

- (1) GROUND
- (2) BITUMINOUS MATERIALS (PRIME COAT)
- (3) AGGREGATE SUBGRADE IMPROVEMENT 12"
- (4) HOT MIX ASPHALT SURFACE COURSE, MIX "C," N70, 11*2"
- (5) HOT MIX ASPHALT BINDER COURSE, IL-19.0, N70, 21*2"
- (6) COMBINATION CONCRETE CURB AND GUTTER, TYPE B6.12
- (7) PORTLAND CEMENT CONCRETE SIDEWALK, 5"
- (8) MULTI-USE PATH, PORTLAND CEMENT CONCRETE / HOT MIX ASPHALT
- (9) GEOTECHNICAL REINFORCEMENT
- (10) TOPSOIL FURNISH AND PLACE 4"
- (X) EMBANKMENT
- (X) PIPE UNDERDRAINS
- (X) AGGREGATE BASE COURSE, TYPE A, 6"
- (X) GEOTECHNICAL FABRIC FOR GROUND STABILIZATION
- (X) PLACEHOLDER
- (X) PLACEHOLDER
- (X) PLACEHOLDER
- (X) PLACEHOLDER
- (X) PLACEHOLDER
- (X) PLACEHOLDER
- (X) PLACEHOLDER
- (X) PLACEHOLDER
- (X) PLACEHOLDER

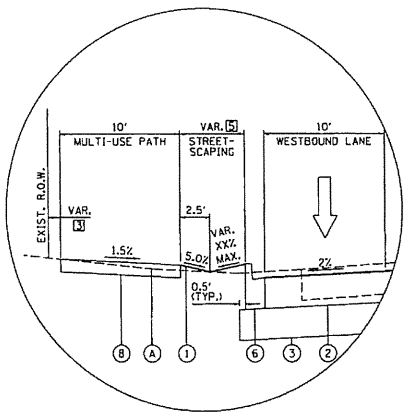

ADDITIONAL ROADSIDE
STA 108+87.24 LT TO 110+24.97 LT

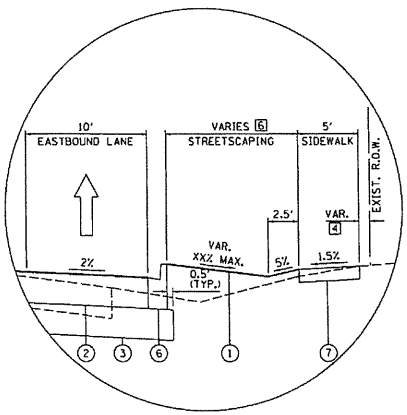

ADDITIONAL ROADSIDE
STA 108+87.24 RT TO STA 109+50.00 RT

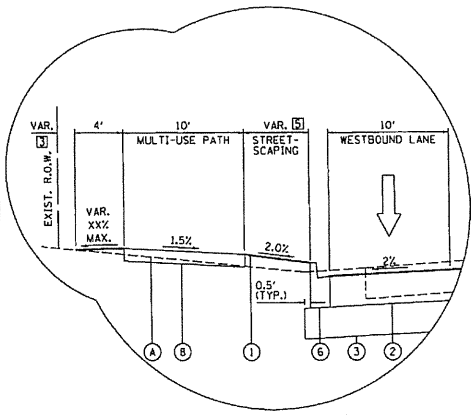

ADDITIONAL ROADSIDE
STA 110+24.97 LT TO STA 110+6X.XX LT

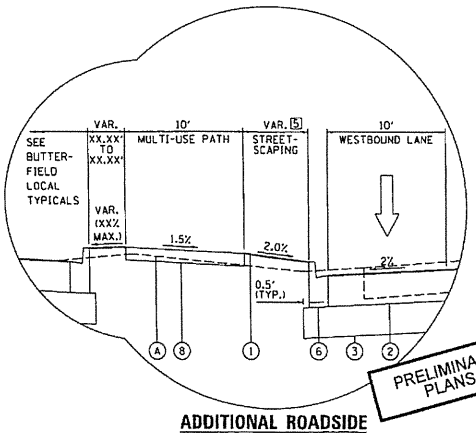

ADDITIONAL ROADSIDE
STA 110+6X.XX LT TO STA 111+90.00 LT

PRELIMINARY PLANS

TYP-10

FILE NAME =	USER NAME = QUILL01655	DESIGNED -	REVISED -
D180000-sht-typ-18.dgn		DRAWN - MCO	REVISED -
	PLOT SCALE = 10.0000 ' / in.	CHECKED -	REVISED -

STATE OF ILLINOIS
DEPARTMENT OF TRANSPORTATION

PROPOSED TYPICAL SECTIONS

F.A.U. RTE.	SECTION	COUNTY	TOTAL SHEETS	SHEET NO.
3645	11-00047-00-FP	COOK	84	10
		CONTRACT NO. XXXXX		

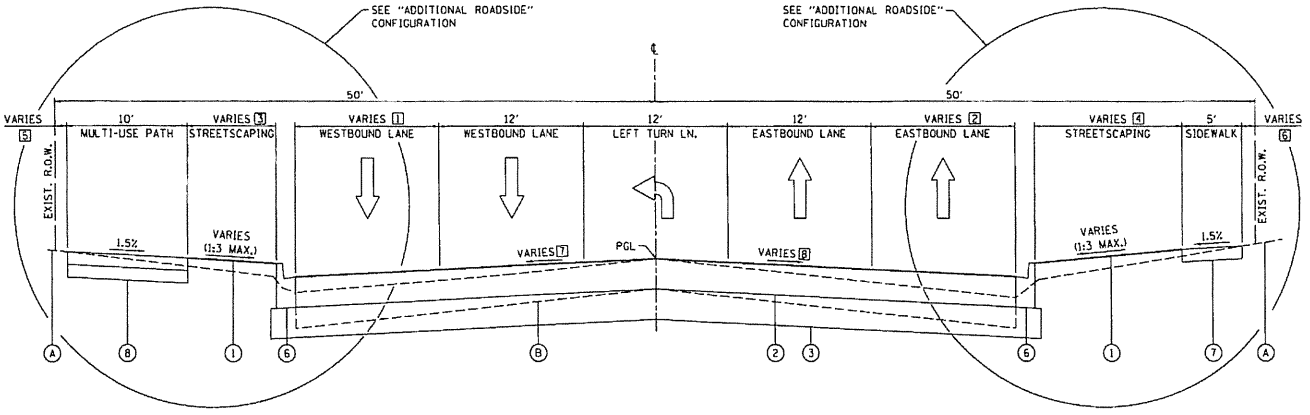

1 WESTBOUND OUTSIDE LANE WIDTH
STA 113+00.00 TO 117+00.00 = TAPERS 0 TO 12.00'
STA 117+00.00 TO 120+74.66 = 12.00'

2 EASTBOUND OUTSIDE LANE WIDTH
STA 113+00.00 TO 115+30.00 = 0
STA 115+30.00 TO 116+65.00 = TAPERS 0 TO 12.00'
STA 116+65.00 TO 120+66.00 = 12.00'

3 STREETSCAPING WIDTH LEFT
STA 113+00.00 LT TO 113+20.00 LT = VARIES 15.64' TO 15.66'
STA 113+20.00 LT TO 117+00.00 LT = VARIES 15.66' TO 7.42'
STA 117+00.00 LT TO 120+37.40 LT = 7.42'
STA 120+62.42 LT TO 120+74.66 LT = VARIES 7.42' TO 6.42'

4 STREETSCAPING WIDTH RIGHT
STA 113+00.00 RT TO 115+30.00 RT = 15.42'
STA 115+30.00 RT TO 116+75.28 RT = VARIES 15.42' TO 12.42'
STA 116+75.28 RT TO 120+51.05 RT = 12.42'
STA 120+40.00 RT TO 120+66.00 RT = VARIES 12.42' TO 11.42'

5 BACK OF MU PATH TO EX ROW
STA 113+00.00 LT TO 115+29.90 LT = VARIES 4.77' TO 1.00'
STA 115+29.90 LT TO 120+80.00 LT = 1.00'

6 BACK OF SIDEWALK TO EX ROW
STA 113+00.00 RT TO 115+30.00 RT = 10.00'
STA 115+30.00 RT TO 116+34.27 RT = VARIES 10.00' TO 1.00'
STA 116+34.27 RT TO 120+80.00 RT = 1.00'

7 WESTBOUND ROADWAY CROSS-SLOPE
STA 113+00.00 LT TO 120+30.00 LT = 2.00%
STA 120+30.00 LT TO 120+80.00 LT = TRANSITIONS 2.00% TO 0.50%
STA 120+80.00 LT TO 120+90.00 LT = 0.50%

8 EASTBOUND ROADWAY CROSS-SLOPE
STA 113+00.00 RT TO 120+30.00 RT = 2.00%
STA 120+30.00 RT TO 120+80.00 RT = TRANSITIONS 2.00% TO 0.50%
STA 120+80.00 RT TO 120+90.00 RT = 0.50%

PROPOSED ILLINOIS ROUTE 56
(WASHINGTON BOULEVARD)

STA 113+00.00 TO STA 120+90.00

INTERSECTION LIMITS (NOT REPRESENTED BY TYPICAL):
STA 114+43.59 RT TO STA 115+28.00 RT
STA 120+74.66 LT TO STA 120+90.00 LT
STA 120+66.00 RT TO STA 120+90.00 RT

NOTES:
1. CURB & GUTTER TRANSITIONS FROM B6.12 TO B6.24 FROM 120+64.42 TO 120+74.66 LT AND 120+40.00 TO 120+50.00 RT
2. PLACEHOLDER
3. PLACEHOLDER

EXISTING LEGEND:
- (A) GROUND
- (B) PAVEMENT, HOT MIX ASHPALT
- (C) CONCRETE CURB & GUTTER, TYPE B6.12
- (D) PCC SIDEWALK
- (X) PLACEHOLDER
- (X) PLACEHOLDER
- (X) PLACEHOLDER
- (X) PLACEHOLDER
- (X) PLACEHOLDER
- (X) PLACEHOLDER

PROPOSED LEGEND:
- (1) GROUND
- (2) BITUMINOUS MATERIALS (PRIME COAT)
- (3) AGGREGATE SUBGRADE IMPROVEMENT 12"
- (4) HOT MIX ASPHALT SURFACE COURSE, MIX "C," N70, 11*2"
- (5) HOT MIX ASPHALT BINDER COURSE, IL-19.0, N70, 21*2"
- (6) COMBINATION CONCRETE CURB AND GUTTER, TYPE B6.12
- (7) PORTLAND CEMENT CONCRETE SIDEWALK, 5"
- (8) MULTI-USE PATH, PORTLAND CEMENT CONCRETE / HOT MIX ASPHALT
- (9) GEOTECHNICAL REINFORCEMENT
- (10) TOPSOIL FURNISH AND PLACE 4"
- (X) EMBANKMENT
- (X) PIPE UNDERDRAINS
- (X) AGGREGATE BASE COURSE, TYPE A, 6"
- (X) GEOTECHNICAL FABRIC FOR GROUND STABILIZATION
- (X) PLACEHOLDER
- (X) PLACEHOLDER
- (X) PLACEHOLDER
- (X) PLACEHOLDER
- (X) PLACEHOLDER
- (X) PLACEHOLDER
- (X) PLACEHOLDER
- (X) PLACEHOLDER

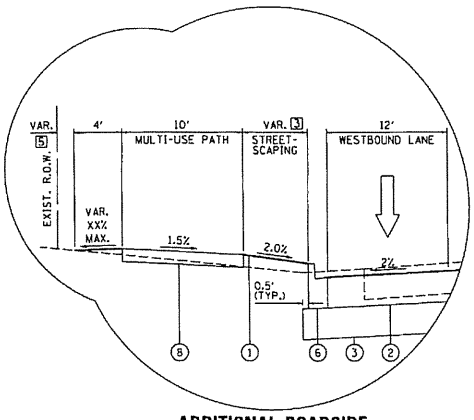

ADDITIONAL ROADSIDE
STA 115+05.00 LT TO STA 116+19.00 LT

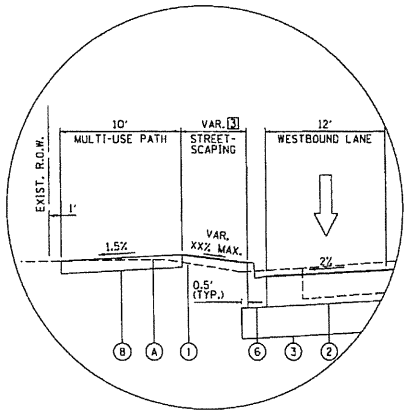

ADDITIONAL ROADSIDE
STA 116+19.00 LT TO 119+00.00 LT

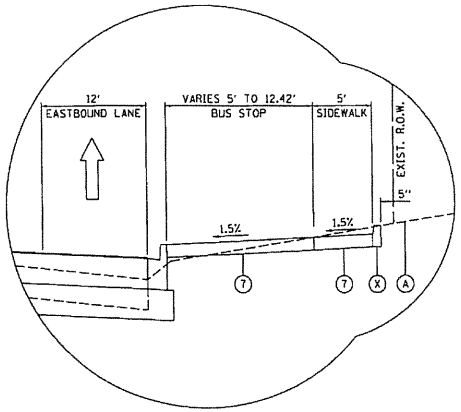

ADDITIONAL ROADSIDE
STA 120+12.00 RT TO 120+37.00 RT

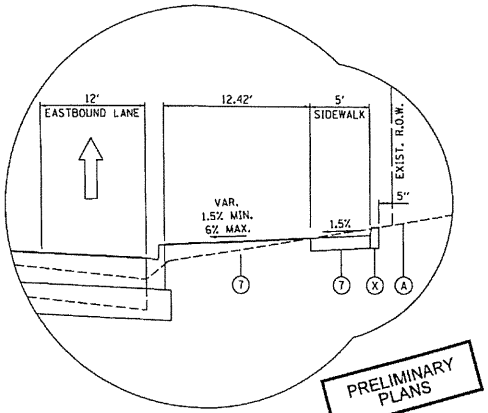

PRELIMINARY PLANS

ADDITIONAL ROADSIDE
STA 120+02.50 RT TO 120+12.00 RT
STA 120+37.00 RT TO 120+52.00 RT

FILE NAME = D1900880-sht-typ-11.dgn	USER NAME = DUILLBIGSS	DESIGNED -	REVISED -	STATE OF ILLINOIS DEPARTMENT OF TRANSPORTATION	PROPOSED TYPICAL SECTIONS	F.A.U. RTE.	SECTION	COUNTY	TOTAL SHEETS	SHEET NO.
		DRAWN - MCO	REVISED -			3645	11-00047-00-FP	COOK	84	11
	PLOT SCALE = 10.0000 ' / in.	CHECKED -	REVISED -					CONTRACT NO. XXXXX		

TYP-11