Benchmark:
BM CP5 - Concrete pedestal set south of the west abutment of Illinois River Bridge SN 008-6000 on US 52 @ Savanna @ Sta. 1560+65.46; Offset 24.85' Lt. NAVD 88 = 597.891 Ft.

Existing Structure: None

Notes:
1. All Elevations are given in NAVD 1988 Datum unless noted.
2. ⊕ Denotes soil boring.
3. F.F. - Front Face
4. B.F. - Back Face

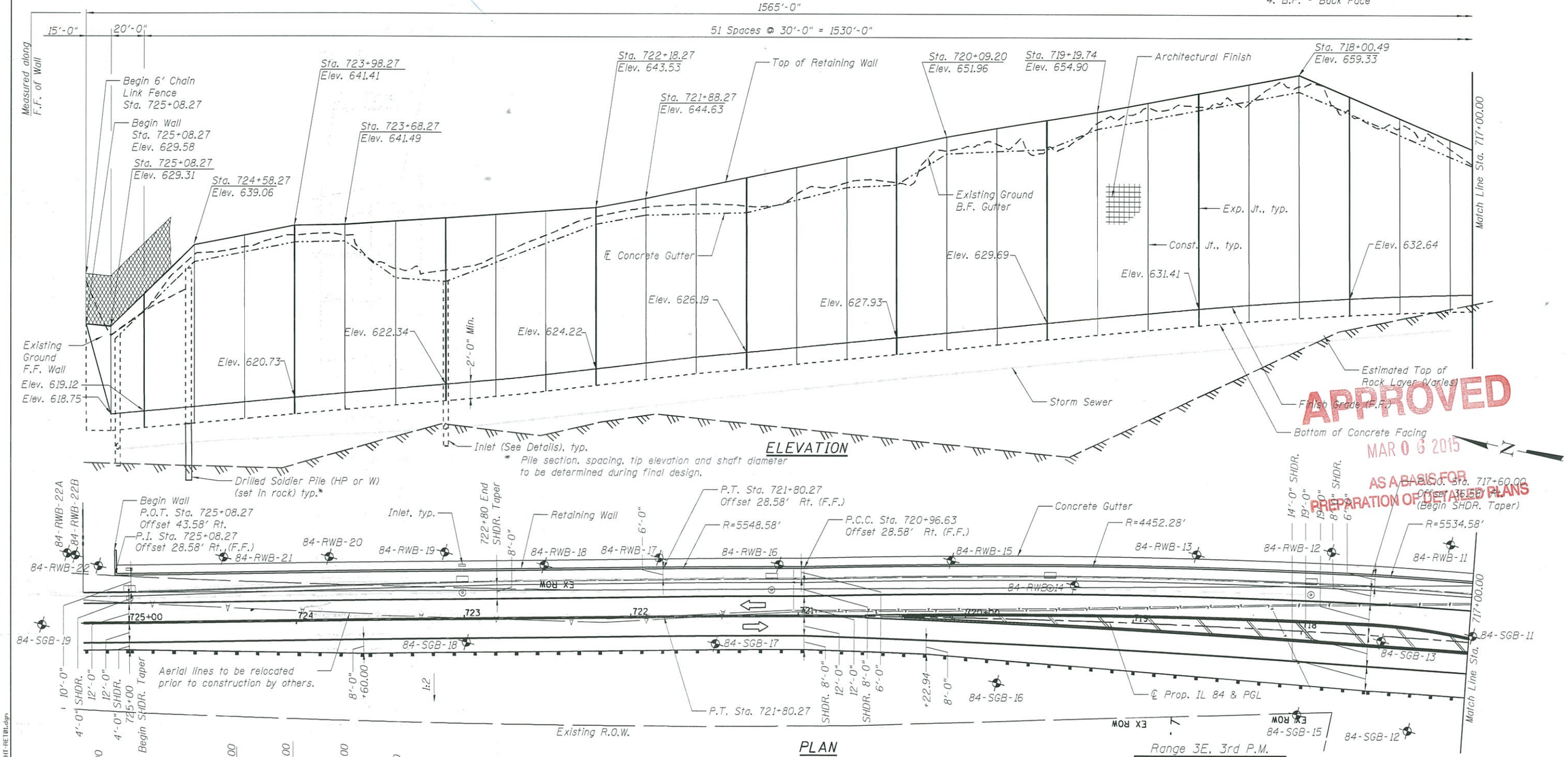

ELEVATION

* Pile section, spacing, tip elevation and shaft diameter to be determined during final design.

PLAN

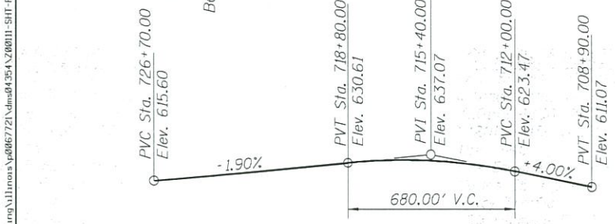

PROFILE GRADE - US 52/IL 64/IL 84

HIGHWAY CLASSIFICATION

US 52/IL 64/IL 84 (FAP 17/308)
Functional Class: Other Principal Arterial
ADT: 4150 (2015); 4350 (2035)
ADTT: 430 (2015); 450 (2035)
DHV: 440
Design Speed: Varies 55 m.p.h. to 45 m.p.h.
Posted Speed: Varies 55 m.p.h. to 40 m.p.h
Two-Way Traffic
Directional Distribution: 50/50

DESIGN SPECIFICATIONS

2012 AASHTO LRFD Bridge Design Specifications, 6th Edition with 2013 Interims

DESIGN STRESSES

FIELD UNITS

f'c = 3,500 psi
fy = 60,000 psi (Reinforcement)
fy = 50,000 psi (M270 Grade 50)

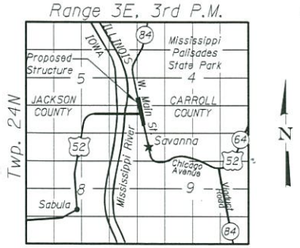

LOCATION SKETCH

GENERAL PLAN
US 52/IL 64/IL 84
F.A.P. RTE. 17/308-SEC. 104B-2
CARROLL COUNTY
STATION 725+10.00 TO 709+70.00
STRUCTURE NO. 008-7001

APPROVED
MAR 06 2015
AS A BASIS FOR PREPARATION OF DETAILED PLANS

PARSONS	USER NAME = p2067721	DESIGNED - JC	REVISED -
	DATE - 11/11/14	CHECKED - GH	REVISED -
	PLOT SCALE =	DRAWN - SQ	REVISED -
	PLOT DATE = 3/5/2015	CHECKED - GH	REVISED -

STATE OF ILLINOIS
DEPARTMENT OF TRANSPORTATION

SHEET NO. 1 OF 3 SHEETS

F.A.P RTE.	SECTION	COUNTY	TOTAL SHEETS	SHEET NO.
17	104B-2	CARROLL		
		CONTRACT NO. 64G59		
		ILLINOIS FED. AID PROJECT		

FILE NAME = c:\pw_working\illinois\p2067721\dms84354\2008II-SHT-RET01.dgn

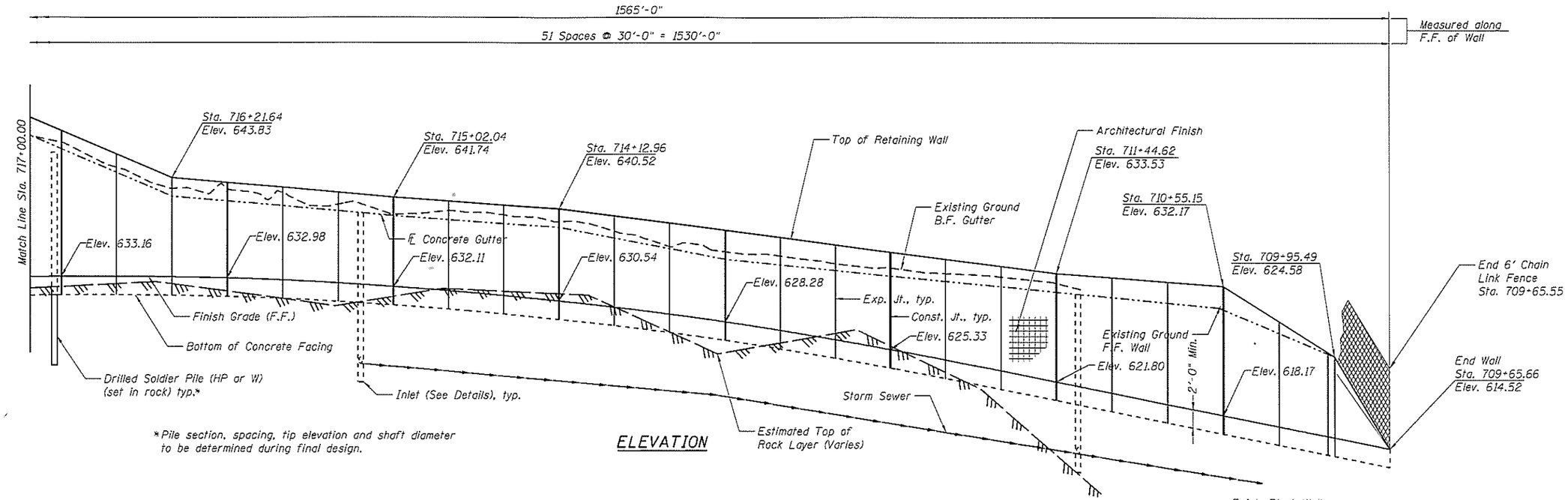

*Pile section, spacing, tip elevation and shaft diameter to be determined during final design.

ELEVATION

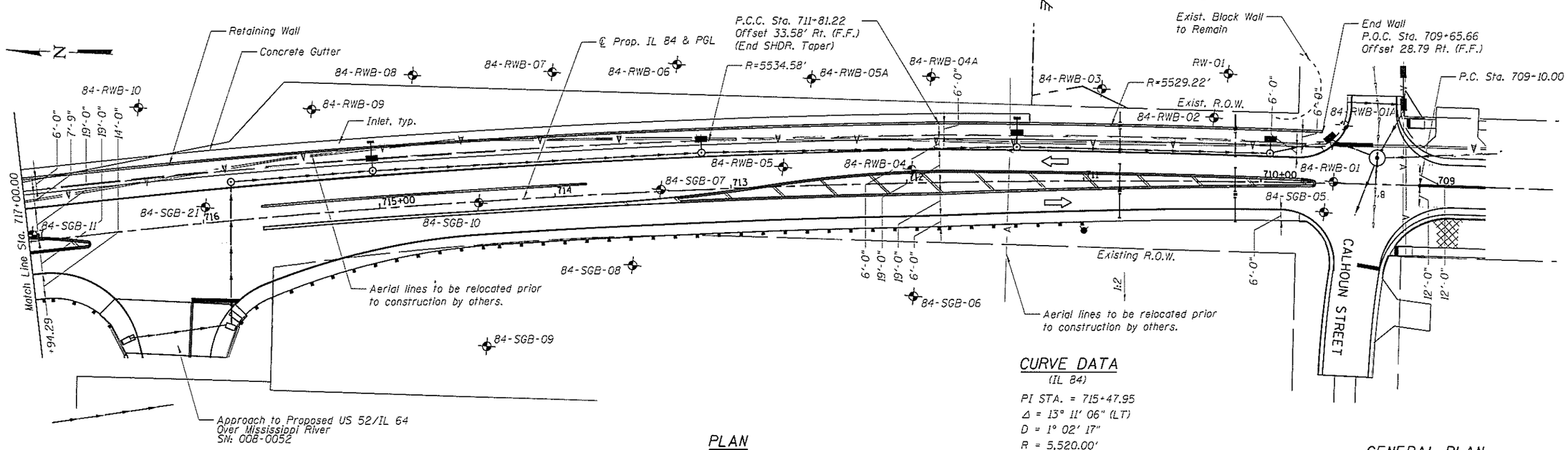

PLAN

CURVE DATA
(IL 84)

PI STA. = 715+47.95
Δ = 13° 11' 06" (LT)
D = 1° 02' 17"
R = 5,520.00'
T = 637.95'
L = 1,270.27'
E = 36.74'
e = 2.40%
T.R. = 41.00'
S.E. RUN = 65.00'
P.C. STA. = 709+10.00
P.T. STA. = 721+80.27

GENERAL PLAN
US 52/IL 64/IL 84
F.A.P. RTE. 17/308-SEC. 104B-2
CARROLL COUNTY
STATION 725+10.00 TO 709+70.00
STRUCTURE NO. 008-7001

PARSONS	USER NAME = p2067721	DESIGNED - JC	REVISED -	STATE OF ILLINOIS DEPARTMENT OF TRANSPORTATION		F.A.P RTE.	SECTION	COUNTY	TOTAL SHEETS	SHEET NO.
	DATE - 11/11/14	CHECKED - GH	REVISED -			17	104B-2	CARROLL		
	PLOT SCALE =	DRAWN - SO	REVISED -					CONTRACT NO. 64G59		
	PLOT DATE = 3/5/2015	CHECKED - GH	REVISED -		SHEET NO. 2 OF 3 SHEETS			ILLINOIS FED. AID PROJECT		

FILE NAME = c:\pw_working\illinois\p2067721\dms84354\X20011-S11-RE102.dgn

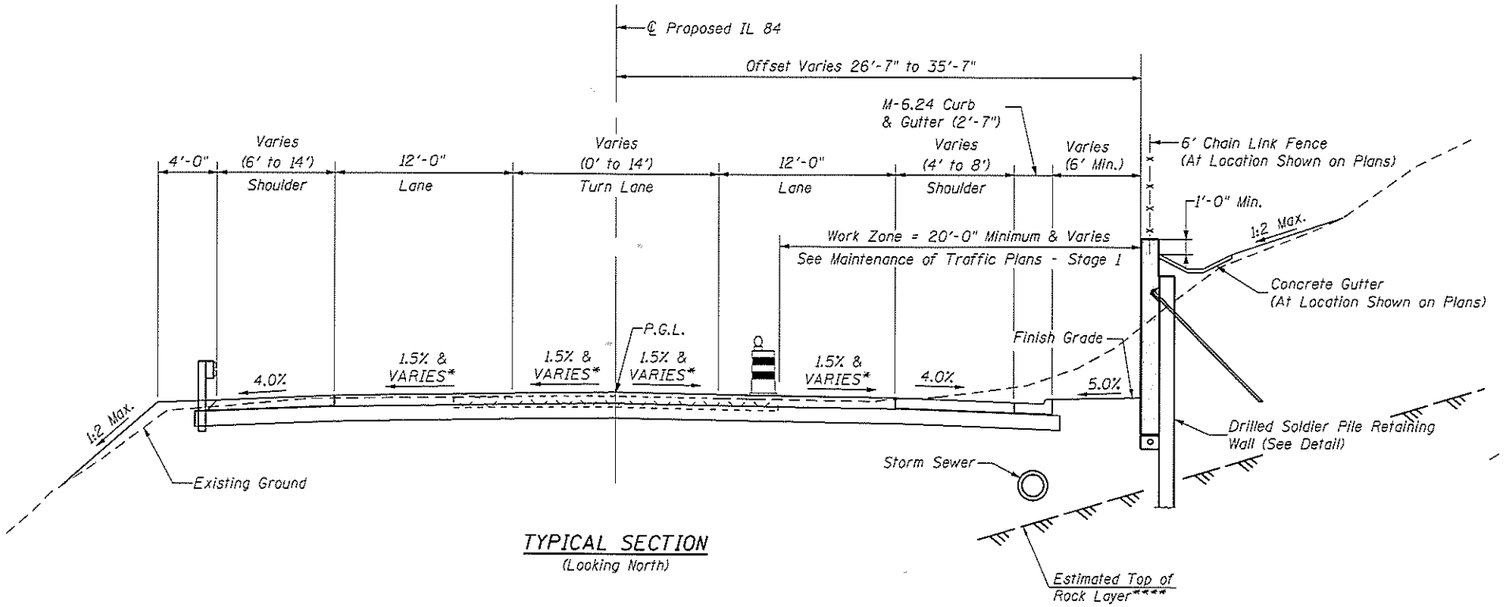

TYPICAL SECTION
(Looking North)

* Pavement cross slope varies as needed for superelevation of the horizontal curve.

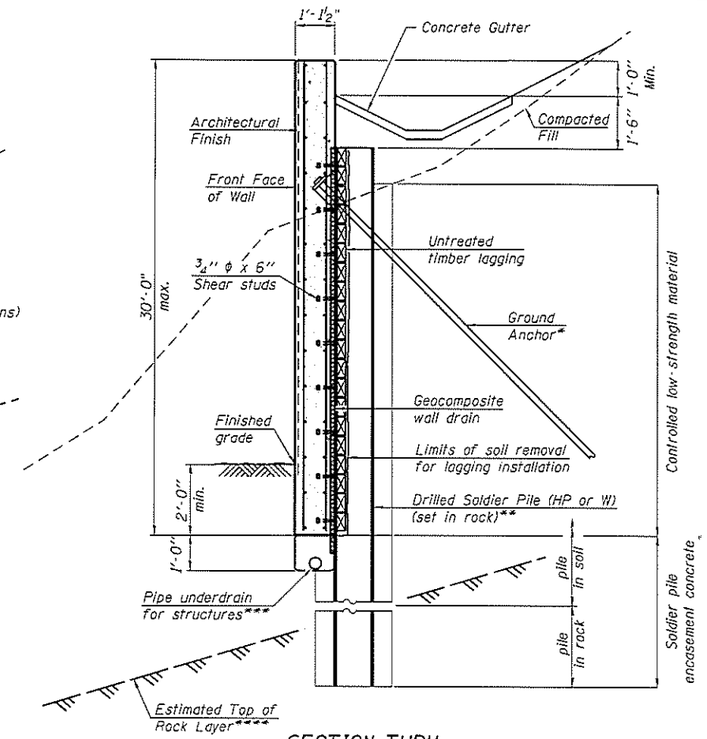

SECTION THRU DRILLED SOLDIER PILE WALL

* Angle of anchors, location (in soil or rock) and non-bonded length, to be determined during final design. No anchors will be used from Sta. 709+65 to Sta. 711+30 due to right-of-way restrictions.

** Pile section, spacing, tip elevation, shaft diameter, and rock socket to be determined during final design.

*** Pipe underdrain to outlet to nearest proposed inlet.

**** Remove rock to back of lagging & bottom of underdrain as required.

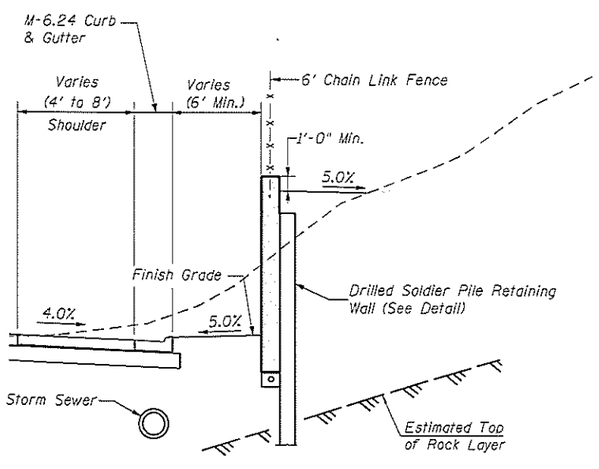

TYPICAL SECTION AT LOCATIONS WITHOUT CONCRETE GUTTER
(Looking North)

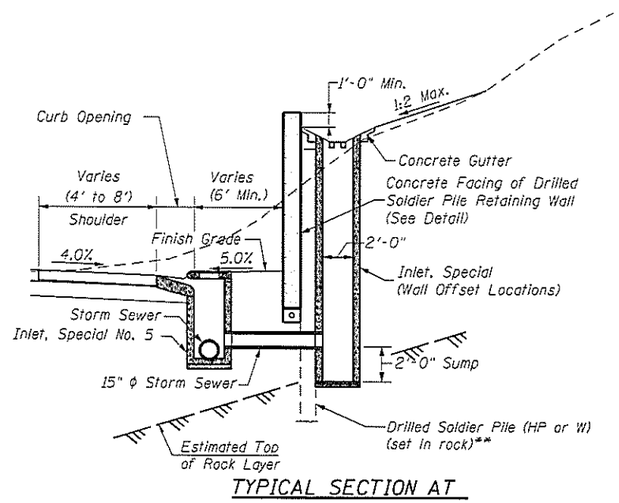

TYPICAL SECTION AT INLET LOCATION*
(Looking North)

*See Inlet Locations Table

INLET LOCATIONS TABLE

Station	Offset	Rim Elevation	Invert Elevation	Bottom Of Structure Elevation	Estimated Top of Rock Elevation
711+32.86	36.96 RT	631.30	614.00	611.50	611.80
713+27.82	39.40 RT	635.23	620.35	617.85	624.84
714+28.91	39.92 RT	638.74	622.25	619.75	631.48
715+19.76	41.01 RT	640.05	623.75	621.25	630.45
717+11.05	38.89 RT	649.58	628.90	626.40	631.74
719+39.62	36.02 RT	651.25	624.95	622.45	603.09
720+33.90	33.80 RT	646.64	623.10	620.60	610.05
721+15.93	32.05 RT	643.55	621.35	618.85	610.12
723+08.32	31.84 RT	634.64	616.90	614.40	612.33
724+49.98	32.46 RT	637.39	615.50	613.00	603.33
725+04.25	31.66 RT	628.10	614.50	612.00	601.95

DETAILS
US 52/IL 64/IL 84
F.A.P. RTE. 17/308-SEC. 104B-2
CARROLL COUNTY
STATION 725+10.00 TO 709+70.00
STRUCTURE NO. 008-7001

FILE NAME = c:\pw_working\illinois\p0867721\dgn\84354\2801I-SHT-Detl1.dgn

PARSONS	USER NAME = p0867721	DESIGNED - JC	REVISED -	STATE OF ILLINOIS DEPARTMENT OF TRANSPORTATION	SHEET NO. 3 OF 3 SHEETS
	DATE - 11/11/14	CHECKED - GH	REVISED -		
	PLOT SCALE =	DRAWN - SQ	REVISED -		
	PLOT DATE = 3/5/2015	CHECKED - GH	REVISED -		

F.A.P RTE.	SECTION	COUNTY	TOTAL SHEETS	SHEET NO.
17	104B-2	CARROLL		
		CONTRACT NO. 64G59		
		ILLINOIS FED. AID PROJECT		