Bench Mark: Chiseled "□" Top of Northwest Wingwall of Structure 010-0090. Elevation 657.16.

Existing Structure: S.N. 010-0090 was originally built in 1914 as SA12, Section 89-15D and reconstructed in 1979 as F.A.S. Rte. 516, Section 77-00089-01-BR. The existing structure consists of three simple spans of PPC deck beams supported by closed abutments on spread footings and solid wall piers on timber piles. Bk. to Bk. of Abutment length measures 173'-11" and out-to-out deck width measures 30'-0". Structure to be removed and replaced. Traffic to be detoured during construction.

No Salvage

## DESIGN SCOUR ELEVATION TABLE

| Event/Limit State | Design Scour Elevations (ft.) | | | Item 113 |
|---|---|---|---|---|
| | S. Abut. | Pier | N. Abut. | |
| Q100 | 649.04 | 627.24 | 650.79 | 5 |
| Q200 | 649.04 | 626.24 | 650.79 | |
| Design | 649.04 | 627.24 | 650.79 | |
| Check | 649.04 | 626.24 | 650.79 | |

## HIGHWAY CLASSIFICATION

F.A.S. Rte. 516 - C.H. 12 (St. Joseph Rd.)
Functional Class: Major Collector
ADT: 850 (2019); 950 (2039)
ADTT: 71 (2016); 79 (2035)
DHV: 120 (2035)
Design Speed: 55 m.p.h.
Posted Speed: 55 m.p.h.
Two-Way Traffic
Directional Distribution: 55:45

## LOADING HL-93

Allow 50#/sq. ft. for future wearing surface.

## DESIGN SPECIFICATIONS

2017 AASHTO LRFD Bridge Design Specifications, 8th Edition

## DESIGN STRESSES

### FIELD UNITS

f'c = 3,500 psi
f'c = 4,000 psi (Superstructure Concrete)
fy = 50,000 psi (AASHTO M 270 Grade 50W)
fy = 60,000 psi (Reinforcement)

## SEISMIC DATA

Seismic Performance Zone (SPZ) = 1
Design Spectral Acceleration at 1.0 sec. ($S_{D1}$) = 0.139
Design Spectral Acceleration at 0.2 sec. ($S_{DS}$) = 0.246
Soil Site Class = D

APPROVED
APR 05 2019
AS A BASIS FOR PREPARATION OF DETAILED PLANS

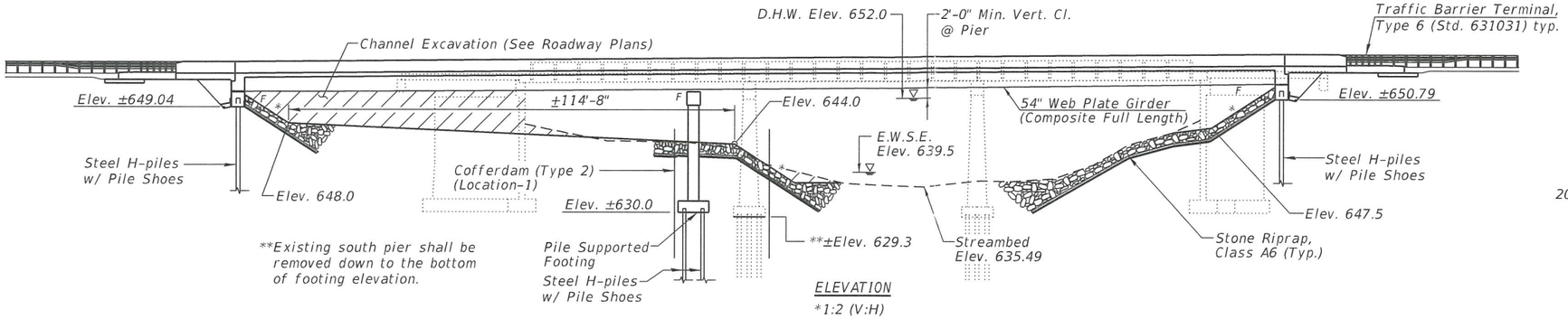


ELEVATION
*1:2 (V:H)

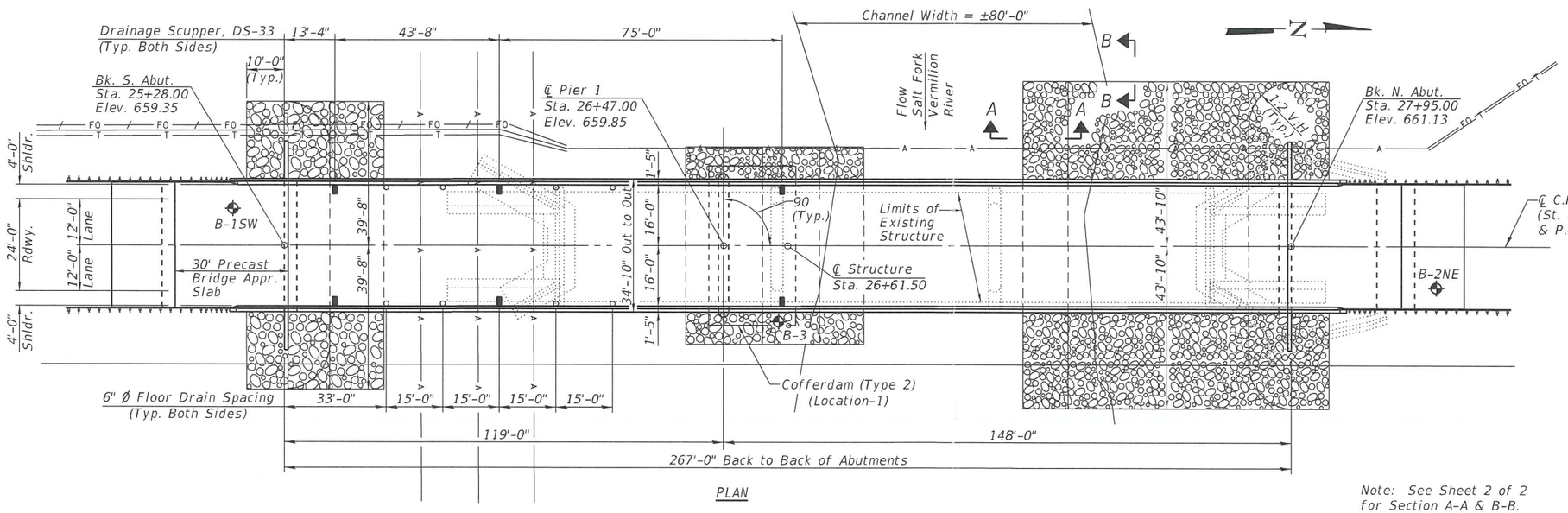


PLAN

Note: See Sheet 2 of 2 for Section A-A & B-B.

LOCATION SKETCH

## WATERWAY INFORMATION

Existing Low Grade Elev. = 657.63 @ Sta. 25+03.19
Drainage Area = 298.00 mi.$^2$ Proposed Low Grade Elev. = 659.27 @ Sta. 24+50

| Flood | Freq. Yr. | Q Ft$^3$/s | Opening Sq. Ft. Exist. | Opening Sq. Ft. Prop. | Nat. H.W.E. | Head - Ft. Exist. | Head - Ft. Prop. | Headwater El. Exist. | Headwater El. Prop. |
|---|---|---|---|---|---|---|---|---|---|
| | 10 | 7510 | 1513 | 1782 | 650.2 | 0.3 | 0.2 | 650.5 | 650.4 |
| Design | 30 | 10,328 | 1810 | 2219 | 652.0 | 0.4 | 0.3 | 652.4 | 652.3 |
| Base | 100 | 13,601 | 2073 | 2618 | 653.6 | 0.6 | 0.4 | 654.2 | 654.0 |
| Scour Design Check | 200 | 15,709 | 2222 | 2743 | 654.5 | 0.7 | 0.5 | 655.2 | 655.0 |
| Max. Calc. | 500 | 18,496 | 2376 | 2768 | 655.6 | 1.6 | 0.6 | 657.2 | 656.2 |

10 Year Velocity Through Existing Bridge = 4.93 ft/s
10 Year Velocity Through Proposed Bridge = 4.17 ft/s

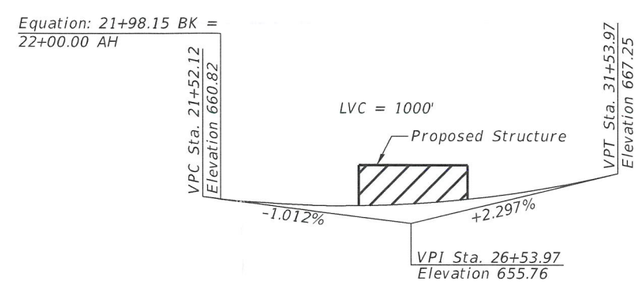


PROFILE GRADE
(Along ℄ C.H. 12 (St. Joseph Rd.) )

GENERAL PLAN & ELEVATION
C.H. 12 (ST. JOSEPH RD.) OVER SALT FORK VERMILION RIVER
F.A.S. 516 - SEC. 77-00089-01-BR-1
CHAMPAIGN COUNTY
STATION 26+61.50
STRUCTURE NO. 010-0293

| FILE NAME = TSL-001.dgn | USER NAME = | DESIGNED - GBR | REVISED - | STATE OF ILLINOIS DEPARTMENT OF TRANSPORTATION | SHEET NO. 1 OF 2 SHEETS |
|---|---|---|---|---|---|
| BACON \| FARMER \| WORKMAN ENGINEERING & TESTING, INC. 421 SOUTH GRAND AVENUE WEST SUITE 1A SPRINGFIELD, ILLINOIS 62704 PHONE - 217-679-6264 | | CHECKED - CMV | REVISED - | | |
| | PLOT SCALE = | DRAWN - BJV | REVISED - | | |
| | PLOT DATE = 3/28/2019 | CHECKED - GBR | REVISED - | | |

| F.A.S. RTE. | SECTION | COUNTY | TOTAL SHEETS | SHEET NO. |
|---|---|---|---|---|
| 516 | 77-00089-01-BR-1 | CHAMPAIGN | | |
| | | CONTRACT NO. 70616 | | |
| | | ILLINOIS FED. AID PROJECT | | |

APPROVED

APR 05 2019

AS A BASIS FOR PREPARATION OF DETAILED PLANS

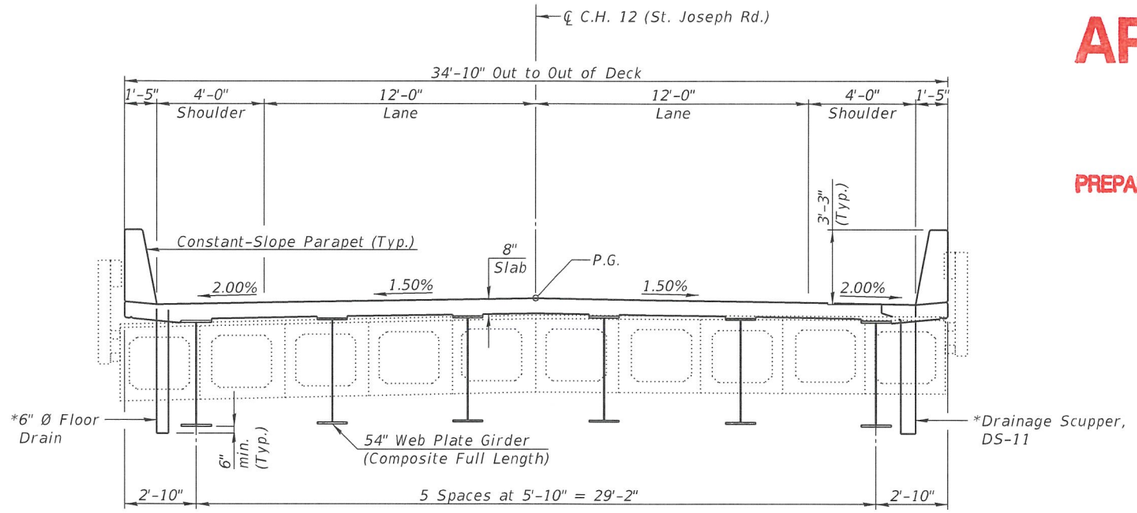


*See Sheet 1 of 2 for Location & Spacing

CROSS SECTION

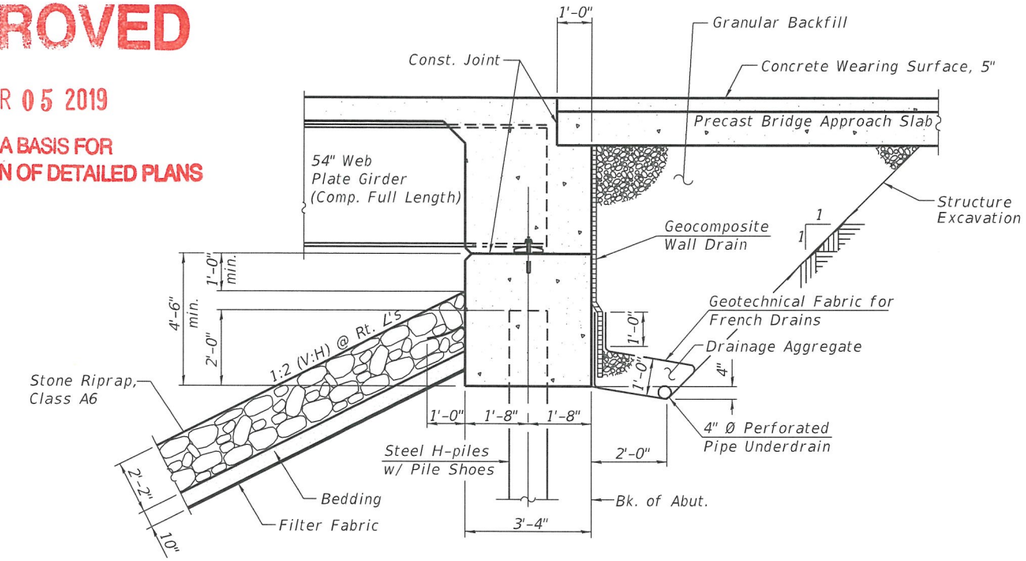


SECTION THRU ABUTMENT

(Horiz. Dim. @ Rt. L's)

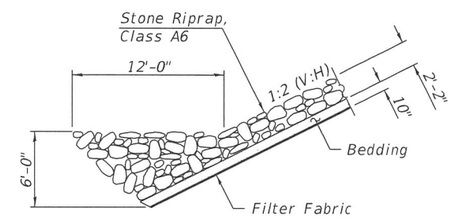


SECTION A-A

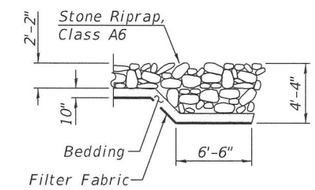


SECTION B-B

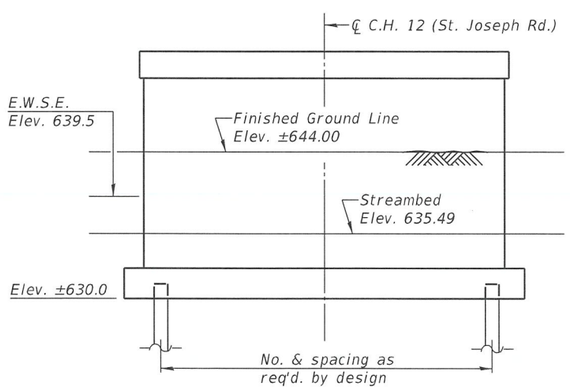


PIER SKETCH

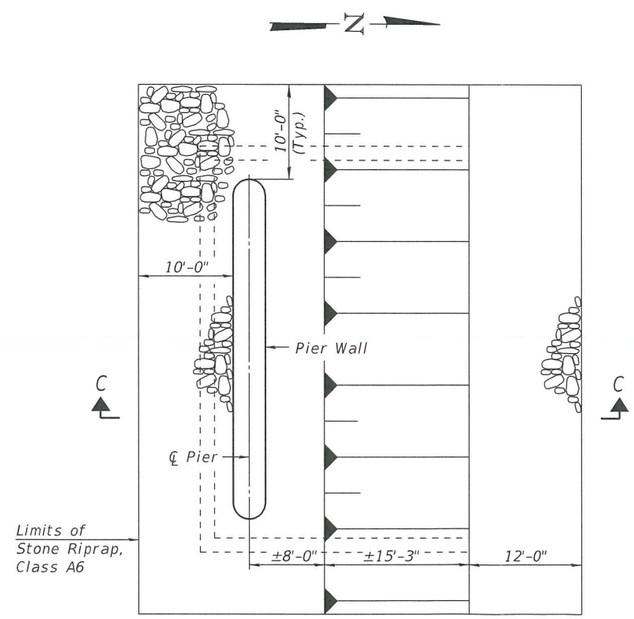


PLAN - PIER RIPRAP PROTECTION DETAIL

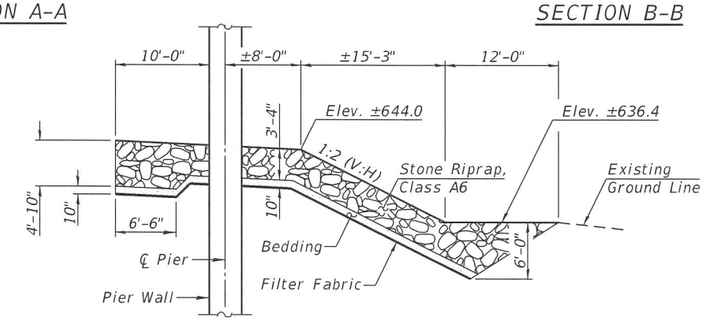


SECTION C-C

DETAILS

C.H. 12 (ST. JOSEPH RD.) OVER SALT FORK VERMILION RIVER

F.A.S. 516 - SEC. 77-00089-01-BR-1

CHAMPAIGN COUNTY

STATION 26+61.50

STRUCTURE NO. 010-0293

| | | | | | | | | | |
|---|---|---|---|---|---|---|---|---|---|
| FILE NAME = TSL-002.dgn | USER NAME = | DESIGNED - GBR | REVISED - | STATE OF ILLINOIS DEPARTMENT OF TRANSPORTATION | | F.A.S. RTE. | SECTION | COUNTY | TOTAL SHEETS / SHEET NO. |
| BFW BACON \| FARMER \| WORKMAN ENGINEERING & TESTING, INC. 421 SOUTH GRAND AVENUE WEST - SUITE 1A SPRINGFIELD, ILLINOIS 62704 PHONE - 217 679 4249 | | CHECKED - CMV | REVISED - | | | 516 | 77-0089-01-BR-1 | CHAMPAIGN | |
| | PLOT SCALE = | DRAWN - BJV | REVISED - | | | | | CONTRACT NO. 70616 | |
| | PLOT DATE = 3/28/2019 | CHECKED - GBR | REVISED - | | SHEET NO. 2 OF 2 SHEETS | | | ILLINOIS FED. AID PROJECT | |