Benchmark BM 5: Chiseled " □ " set in the center of the headwall on the south side of IL 161, S.N. 014-2001 at Elev. 451.11
Benchmark BM 6: Railroad Spike set in the south face of PP east of bridge at elevation 454.67.
Benchmark BM 7: Chiseled " □ " set in the center of the headwall on the north side of IL 161, S.N. 014-2426 at Elev. 450.41

Existing Structure: Structure number 014-0025, built in 1937 as F.A. Rte. 150, Section 7BY, reconstructed and widened in 1963 is an 11 span concrete deck on steel wide flange beams supported by pile stub abutments and pile bent piers. The existing structure length is 644'-4" back-to-back and 35'-8" out-to-out. The structure is to be removed and replaced. The existing structure will be replaced under road closure.

No salvage.

Notes:
Up to ¼" may be ground off the bridge deck and the bridge approach slabs.
Explosives shall not be used to demolish the structure.
Girder ends and cross frames shall be metalized or galvanized under all open joints.

APPROVED
MAY 18 2018
AS A BASIS FOR
PREPARATION OF DETAILED PLANS

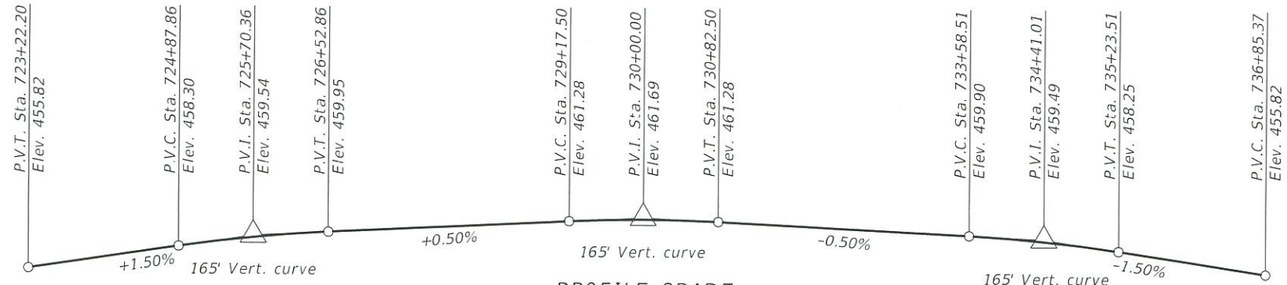

PROFILE GRADE
(Along ℄ F.A.P.Rte. 805)

Note:
The profile grade shows the final elevations after grinding.

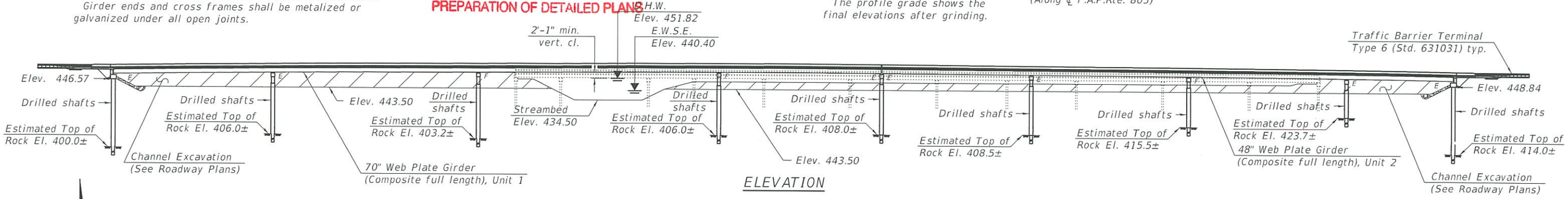

ELEVATION

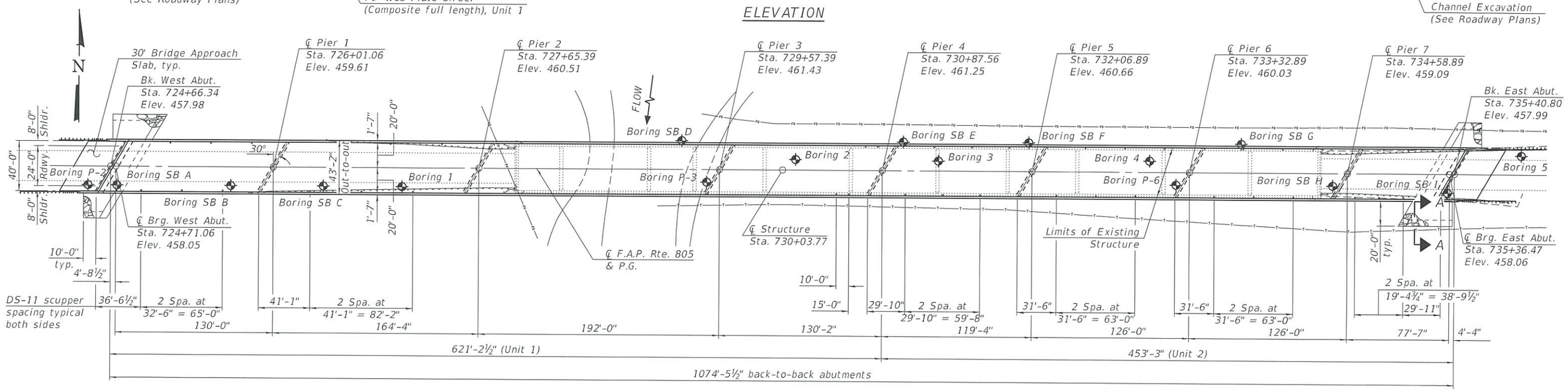

PLAN

LOADING HL-93

Allow 50#/sq. ft. for future wearing surface.

DESIGN STRESSES

FIELD UNITS
f'c = 4,000 psi (Superstructure)
f'c = 3,500 psi (Substructure)
fy = 60,000 psi (Reinforcement)
fy = 50,000 psi (M270 Grade 50)

DESIGN SPECIFICATIONS

2014 AASHTO LRFD
Bridge Design Specifications
7th Edition with 2015 and 2016 Interims

SEISMIC DATA

Seismic Performance Zone (SPZ) = 2
Design Spectral Acceleration at 1.0 sec. (SD1) = 0.271 g
Design Spectral Acceleration at 0.2 sec. (SDS) = 0.637 g
Soil Site Class = D

HIGHWAY CLASSIFICATION

F.A.P. Rte. 805 (IL Rte. 161)
Functional Class: Minor Arterial
ADT: 7650 (2019); 9350 (2039)
ADTT: 337 (2019); 411 (2039)
DHV: 920 (2039)
Design Speed: 55 m.p.h.
Posted Speed: 55 m.p.h.
Two-Way Traffic
Directional Distribution: 50:50

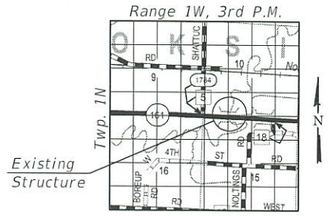

LOCATION SKETCH

GENERAL PLAN & ELEVATION
IL RTE. 161 OVER CROOKED CREEK
F.A.P. RTE. 805 - SEC. 7BR, 7BR-1
CLINTON COUNTY
STATION 730+03.77
STRUCTURE NO. 014-0080

DESIGNED	-	NICHOLAS R. BARNETT
CHECKED	-	VICTOR M MERCADO-VAZQUEZ
DRAWN	-	IAN J. ANDREWS
CHECKED	-	N.R.B. / V.M.V.

MAY 18, 2018

STATE OF ILLINOIS
DEPARTMENT OF TRANSPORTATION

SHEET NO. 1 OF 2 SHEETS

F.A.P. RTE.	SECTION	COUNTY	TOTAL SHEETS	SHEET NO.
805	7BR, 7BR-1	CLINTON		
		CONTRACT NO. 76887		
		ILLINOIS FED. AID PROJECT		

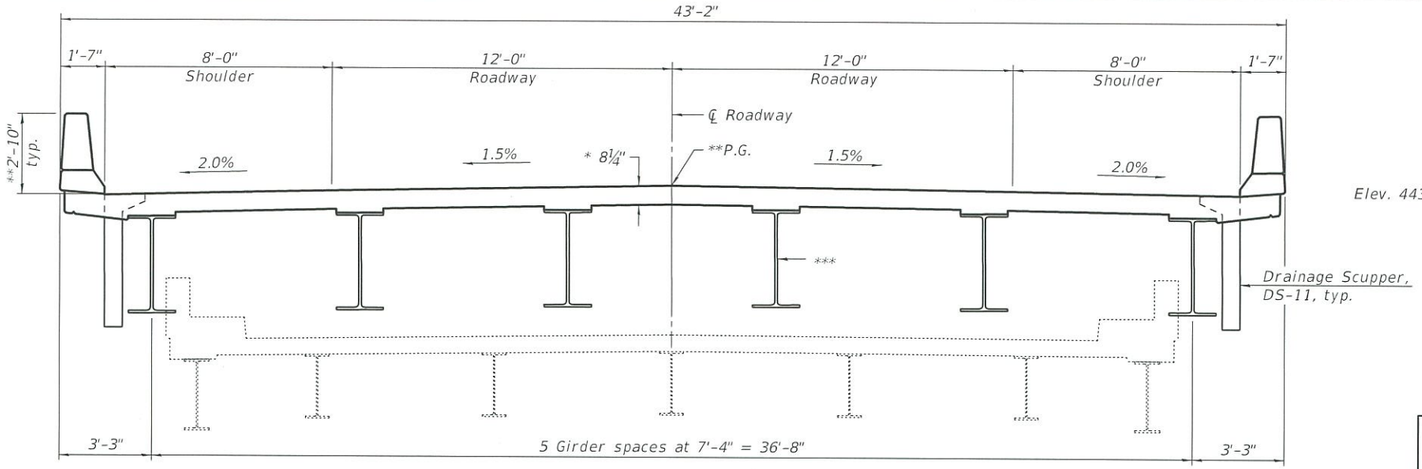

CROSS SECTION
(Looking East)

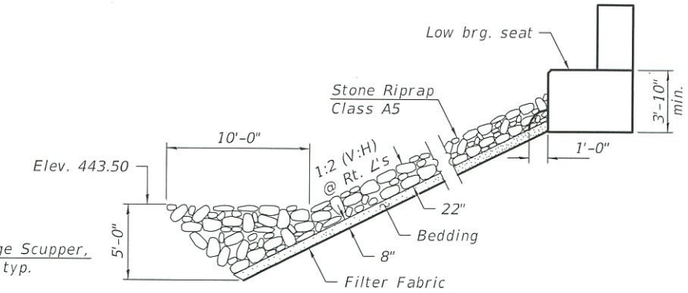

STONE RIPRAP ANCHOR DETAIL

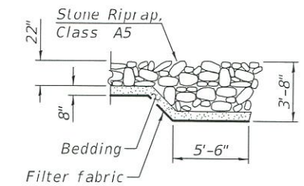

SECTION A-A

WATERWAY INFORMATION

Drainage Area = 178.247 sq. mi. Existing Overtopping Elev. 451.04 @ Sta. 741+32.84
Proposed Overtopping Elev. 454.32 @ Sta. 695+20.48 to 721+22.20 & 738+85.37 to 764+03.26

Flood Event	Freq. Yr.	Discharge Ft³/s	Opening Ft² Exist.	Opening Ft² Prop.	Natural H.W.E.	Head - Ft. Exist.	Head - Ft. Prop.	Headwater El. Exist.	Headwater El. Prop.
	10	12,752	2564	6812	450.80	1.52	1.24	452.32	452.04
Design	50	20,006	2564	8013	451.82	1.84	1.70	453.66	453.52
Base	100	23,200	2564	8465	452.20	2.24	1.88	454.44	454.08
Scour Design Check	500	31,149	2564	10755	456.47	0.23	0.15	456.70	456.62
Overtop Existing	?	5,000	2564	5900	450.51	0.35	0.29	450.86	450.80
Overtop Proposed	100	23,200	2564	8465	452.20	2.24	1.88	454.44	454.08

10 Year Velocity Through Existing Bridge = 3.3 ft/s
10 Year Velocity Through Proposed Bridge = 1.87 ft/s

DESIGN SCOUR ELEVATION TABLE

Event / Limit State	Design Scour Elevations (ft.) W. Abut.	Pier 1	Pier 2	Pier 3	Pier 4	Pier 5	Pier 6	Pier 7	E. Abut.	Item 113
Q100	446.57	436.50	409.20	416.90	434.50	434.50	434.50	434.50	448.84	5
Q500	446.57	432.00	408.20	416.20	429.50	429.50	429.50	429.50	448.84	
Design	446.57	436.50	409.20	416.90	434.50	434.50	434.50	434.50	448.84	
Check	446.57	432.00	408.20	416.20	429.50	429.50	429.50	429.50	448.84	

* Prior to Grinding

** After Grinding

*** 70" Web plate girder (composite full length), Unit 1
48" Web plate girder (composite full length), Unit 2

APPROVED
MAY 18 2018
AS A BASIS FOR PREPARATION OF DETAILED PLANS

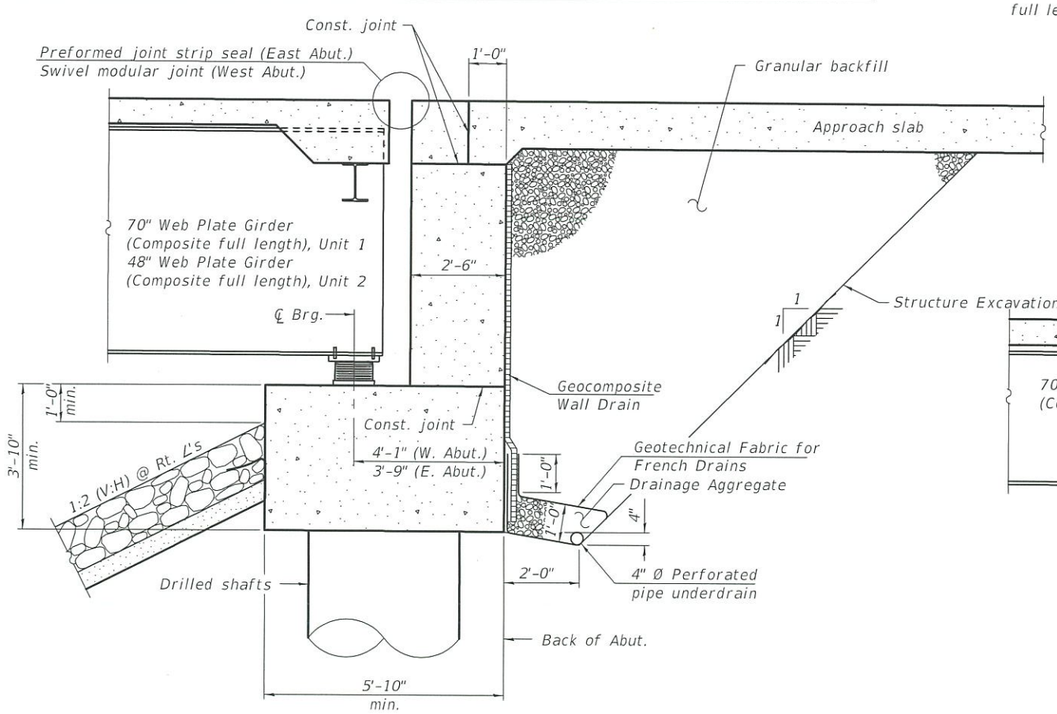

SECTION THRU STUB ABUTMENT
(Horiz. dim. @ Rt. ∠'s)

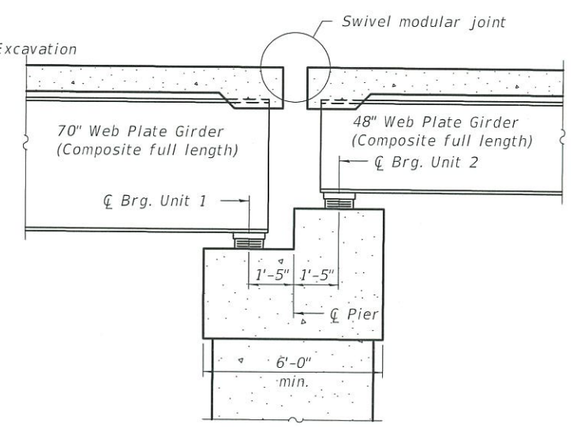

PIER 4 CROSS SECTION
(Horiz. dim. @ Rt. ∠'s)

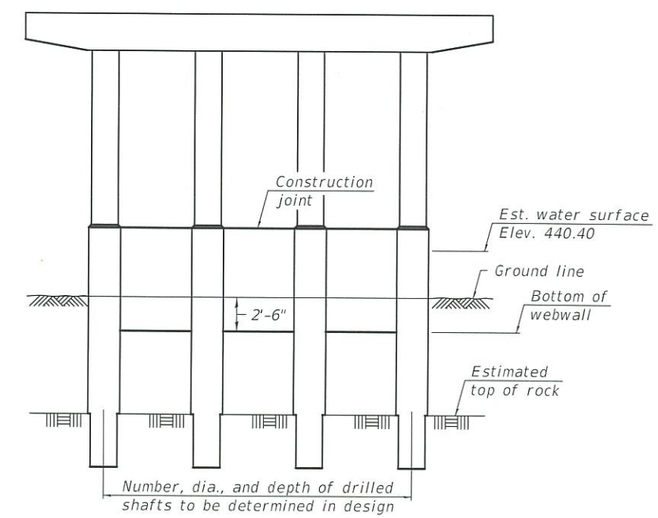

PIER SKETCH

DETAILS
IL RTE. 161 OVER CROOKED CREEK
F.A.P. RTE. 805-SEC 7BR, 7BR-1
CLINTON COUNTY
STATION 730+03.77
STRUCTURE NO. 014-0080

DESIGNED	-	NICHOLAS R. BARNETT
CHECKED	-	VICTOR M MERCADO-VAZQUEZ
DRAWN	-	IAN J. ANDREWS / M.B.M.
CHECKED	-	N.R.B. / V.M.V.

MAY 18, 2018

STATE OF ILLINOIS
DEPARTMENT OF TRANSPORTATION

SHEET NO. 2 OF 2 SHEETS

F.A.P. RTE.	SECTION	COUNTY	TOTAL SHEETS	SHEET NO.
805	7BR, 7BR-1	CLINTON		

CONTRACT NO. 76887
ILLINOIS FED. AID PROJECT