Bench Mark: Cut "□" in west side of light pole concrete base in the island at the southeast corner of Wood Street and Thornton Road, 29.49 feet east of the roadway centerline at Station 261+27.15. Elevation = 596.04

Existing Structure: S.N. 016-0301 built in 1930 as S.B.I. Route No. 49, Section 146 B at Station 228+33.00. Superstructure replaced and bridge widened in 1995 as F.A.U. Route 2857, Section 146(B)R at Station 48+44.61. Structure consists of a four span continuous, composite rolled steel beam superstructure. Substructure consists of closed abutments supported on spread footings and solid wall piers on spread footings. Length = 238'-5 7/8" (back-to-back abutments). Width = 63'-2" (out-to-out deck). Traffic is to be maintained utilizing stage construction.

No salvage

DESIGN SCOUR ELEVATION TABLE

Event/Limit State	Design Scour Elevations (ft.)					Item 113
	South Abut.	Pier 1	Pier 2	Pier 3	North Abut.	
Q50	573.9	565.1	557.9	557.9	572.2	7
Design	575.0	574.0	573.8	573.8	574.8	

DESIGN SPECIFICATIONS

2002 AASHTO Standard Specifications for Highway Bridges
2003 AASHTO Guide Specifications for Horizontally Curved Steel Girder Highway Bridges

LOADING HS20-44

Allow 50#/sq. ft. for future wearing surface.

DESIGN STRESSES

FIELD UNITS (New Construction)
f'_c = 3,500 psi (Concrete)
f_y = 60,000 psi (Reinforcement)

FIELD UNITS (Existing Superstructure)
f'_c = 3,500 psi (Concrete)
f_y = 60,000 psi (Reinforcement)
f_y = 50,000 psi (Structural Steel)(AASHTO M270 Grade 50)
f_y = 36,000 psi (Structural Steel)(AASHTO M270 Grade 36)

FIELD UNITS (Existing Substructure)
f_c = 1,400 psi (Concrete)
f_s = 20,000 psi (Reinforcement)

SEISMIC DATA

Seismic Performance Category (SPC) = A
Bedrock Acceleration Coefficient (A) = 0.035g
Site Coefficient (S) = 1.0

SCOPE OF WORK

1. Remove the existing parapet and add a raised shared-use path to west side of the bridge and both approach slab.
2. Remove the existing parapet and add a raised sidewalk to the east side of the bridge, south approach slab and a portion of the north approach slab.
3. Repair the deck and add a thin polymer overlay to the deck and both approach slabs.
4. Repair the steel framing, abutments and piers.

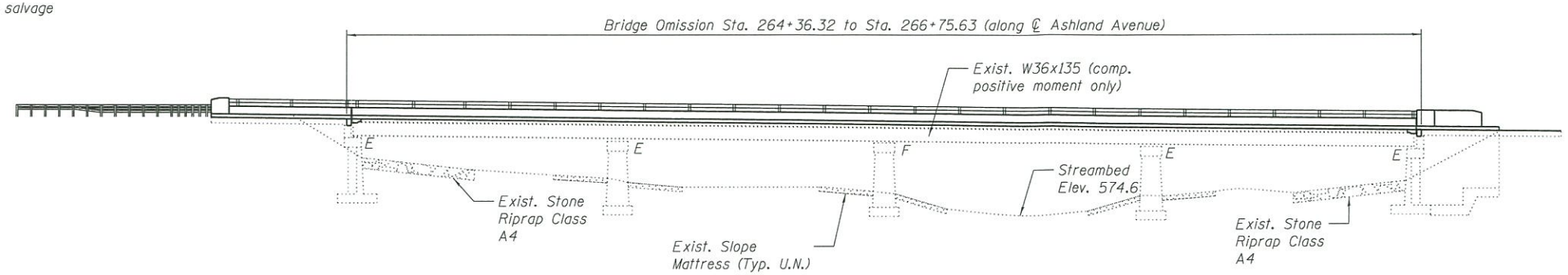

ELEVATION

Note A: 0" from Sta. 264+01.28 to Sta. 265+25.69
Varies from 0" at Sta. 265+25.69 to 12'-0" at Sta. 267+39.78
Note B: 12'-0" from Sta. 264+01.28 to Sta. 265+25.69
Varies from 12'-0" at Sta. 265+25.69 to 0" at Sta. 267+39.78

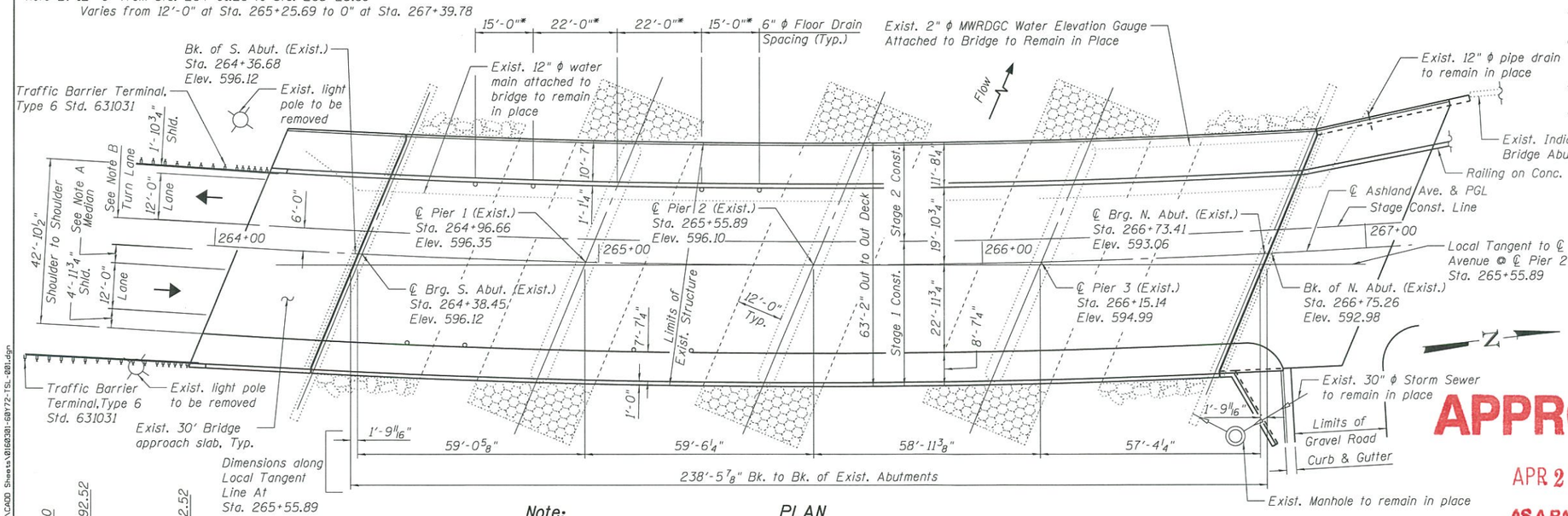

PLAN

Note:

All transverse dimensions shown in the Plan are radial dimension normal to ℄ Ashland Avenue

* Measured along the outside edge of the shoulder

HORIZ. CURVE DATA

P.I. Sta. = 266+81.01
Δ = 15° 06' 53" (LT)
D = 2° 20' 18.97"
L = 646.31'
T = 325.04'
R = 2,450.00'
E = 24.54'
P.C. Sta. = 263+55.97
P.T. Sta. = 270+02.28

LOCATION SKETCH

APPROVED
APR 29 2016
AS A BASIS FOR PREPARATION OF DETAILED PLANS

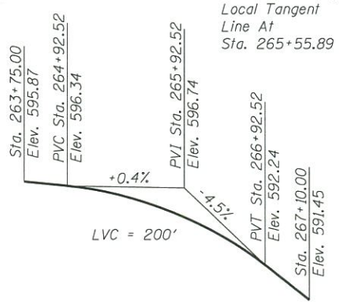

PROFILE GRADE

(Along ℄ F.A.U. Rte. 2857)

HIGHWAY CLASSIFICATION

F.A.U. Route 2857 - Ashland Avenue
Functional Class: Minor Urban Arterial
ADT: 9,500 (2011); 12,000 (2040)
ADTT: 802 (2011); 945 (2040)
DHV: 1,305 (2040)
Design Speed: 45 m.p.h.
Posted Speed: 40 m.p.h.
Two-Way Traffic
Directional Distribution: 50/50

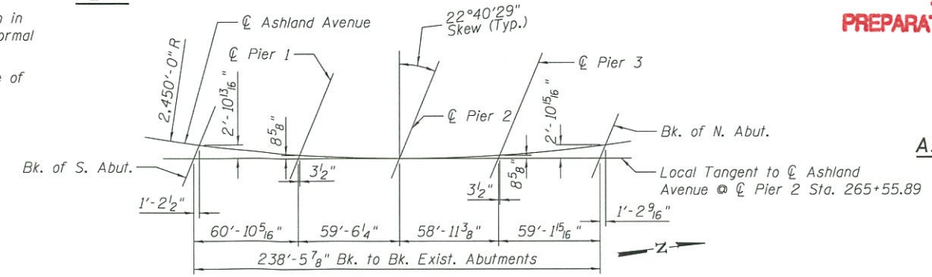

OFFSET SKETCH

GENERAL PLAN & ELEVATION
ASHLAND AVENUE OVER LITTLE CALUMET RIVER
F.A.U RTE. 2857 - SECTION 146(B)R
COOK COUNTY
STA. 265+55.89
STRUCTURE NUMBER 016-0301

INFRASTRUCTURE ENGINEERING INCORPORATED, 33 West Monroe | Suite 1940 | Chicago, IL 60603, P 312.425.9160 | F 312.425.9164 | www.infrastructure-eng.com	USER NAME =	DESIGNED - SPK	REVISED -
		CHECKED - PK	REVISED -
	PLOT SCALE =	DRAWN - PK	REVISED -
	PLOT DATE =	CHECKED - SPK	REVISED -

STATE OF ILLINOIS
DEPARTMENT OF TRANSPORTATION

SHEET NO. 1 OF 3 SHEETS

F.A.U RTE.	SECTION	COUNTY	TOTAL SHEETS	SHEET NO.
2857	146(B)R	COOK		
		CONTRACT NO. 60Y72		
		ILLINOIS FED. AID PROJECT		

3/28/2016 10:34:34 AM PW:P-14\3824-08 IDOT Wood Street Ph II\DGN\CADD Sheets\016B301-60Y72-TSL-001.dgn

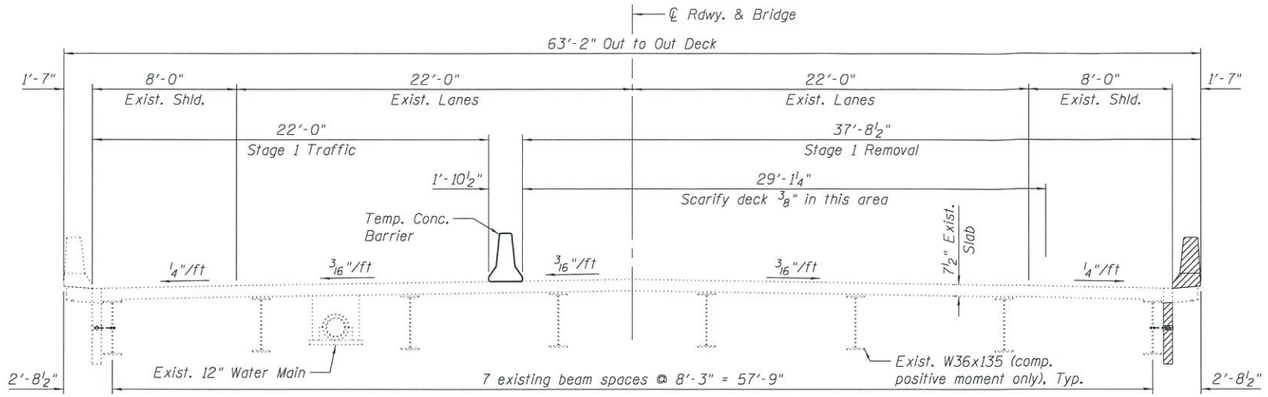

STAGE 1 REMOVAL

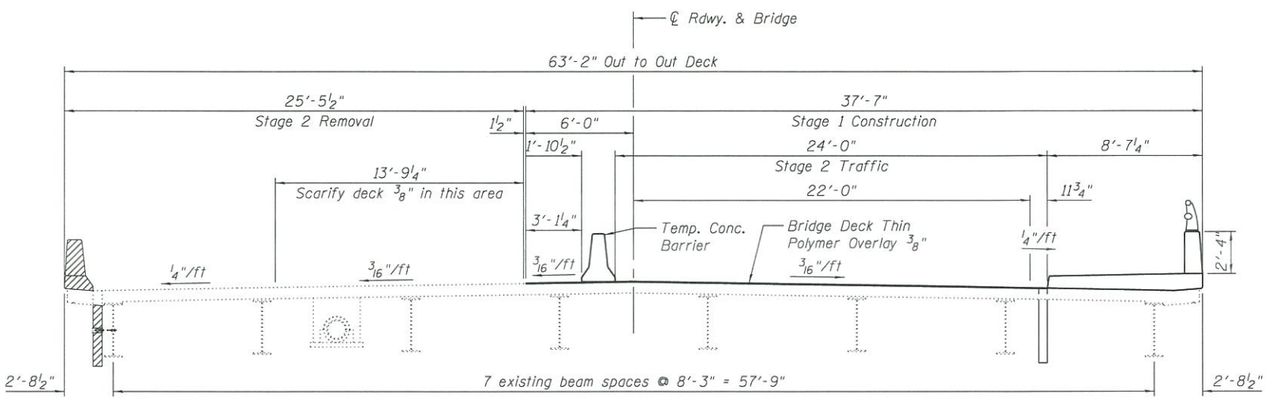

STAGE 2 REMOVAL & STAGE 1 CONSTRUCTION

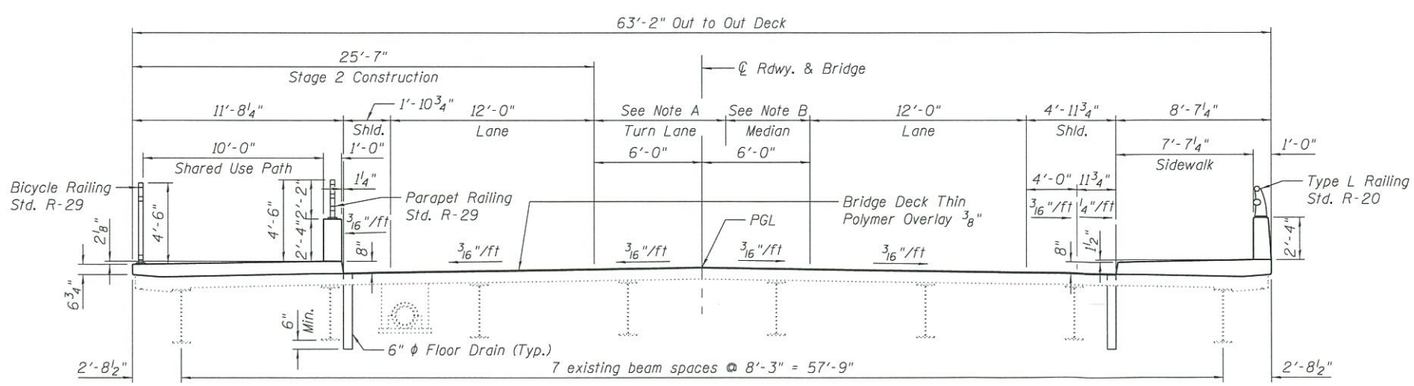

STAGE 2 CONSTRUCTION

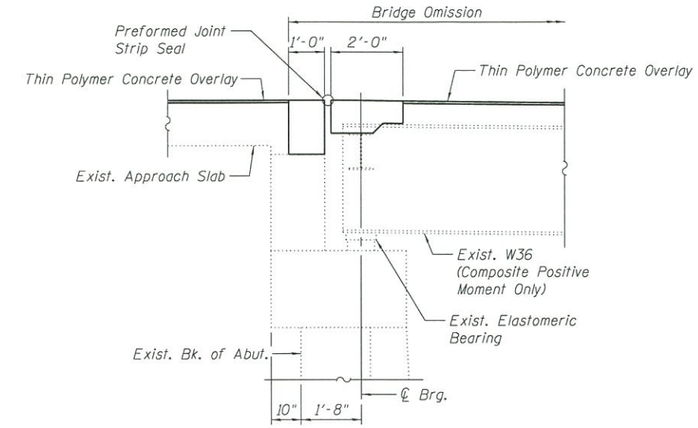

SECTION THRU ABUTMENT (EXIST.)

(Dimensions are at right angle)

APPROVED

APR 29 2016

AS A BASIS FOR PREPARATION OF DETAILED PLANS

Notes:

All staging cross sections are looking North.
All horizontal dimensions in the staging cross sections are radial dimensions.
Hatched area indicates material to be removed.
Note A: 12'-0" from Sta. 264+01.28 to Sta. 265+25.69;
Varies from 12'-0" at Sta. 265+25.69 to 0" at Sta. 267+25.69
Note B: 0" from Sta. 264+01.28 to Sta. 265+25.69;
Varies from 0" at Sta. 265+25.69 to 12'-0" at Sta. 267+39.78

STAGE CONSTRUCTION DETAILS
ASHLAND AVENUE OVER LITTLE CALUMET RIVER
F.A.U. RTE. 2857 - SECTION 146(B)R
COOK COUNTY
STA. 265+55.89
STRUCTURE NUMBER 016-0301

P:\P-14\3824-00 IDOT Wood Street Ph II\GDN\CADD Sheets\016030I-60Y72-TSL-002.dgn
11:01:23 AM
3/21/2016

INFRASTRUCTURE ENGINEERING | INCORPORATED
33 West Monroe | Suite 1540 | Chicago, IL 60603
P 312.425.9500 | F 312.425.9504 | www.infrastructure-eng.com

USER NAME =	DESIGNED - SPK	REVISED -	
	CHECKED - PK	REVISED -	
PLOT SCALE =	DRAWN - PK	REVISED -	
PLOT DATE =	CHECKED - SPK	REVISED -	

STATE OF ILLINOIS
DEPARTMENT OF TRANSPORTATION

SHEET NO. 2 OF 3 SHEETS

F.A.U RTE.	SECTION	COUNTY	TOTAL SHEETS	SHEET NO.
2857	146(B)R	COOK		

CONTRACT NO. 60Y72

ILLINOIS FED. AID PROJECT

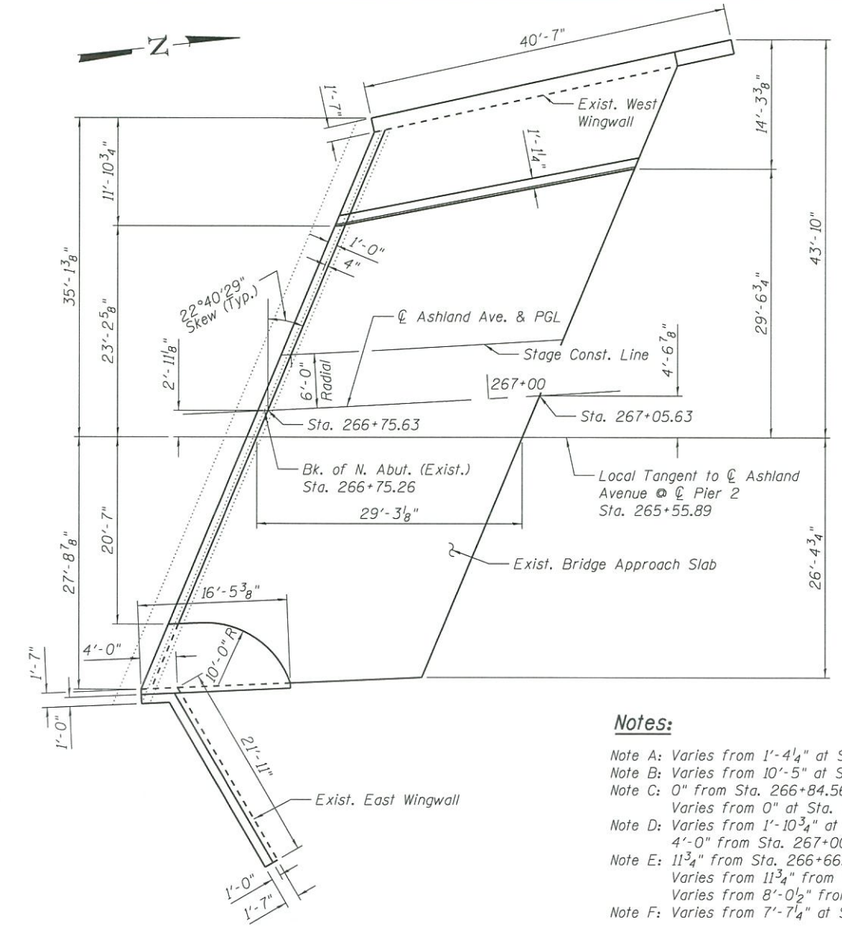

NORTH BRIDGE APPROACH SLAB PLAN

Notes:

Note A: Varies from 1'-4¼" at Sta. 266+78.49 to 4⅝" at Sta. 267+08.59
Note B: Varies from 10'-5" at Sta. 266+72.78 to 11'-5⅜" at Sta. 267+02.69
Note C: 0" from Sta. 266+84.56 to Sta. 267+00.00
Varies from 0" at Sta. 267+00.00 to 2'-3⅜ at Sta. 267+17.69
Note D: Varies from 1'-10¾" at Sta. 266+84.56 to 4'-0" at Sta. 267+00.00
4'-0" from Sta. 267+00.00 to Sta. 267+17.69
Note E: 11¾" from Sta. 266+66.26 to Sta. 266+68.80;
Varies from 11¾" from Sta. 266+68.80 to 8'-0½" at Sta. 266+76.68
Varies from 8'-0½" from Sta. 266+76.68 to 8'-2" at Sta. 266+91.00
Note F: Varies from 7'-7¼" at Sta. 266+60.44 to 0" at Sta. 266+91.00

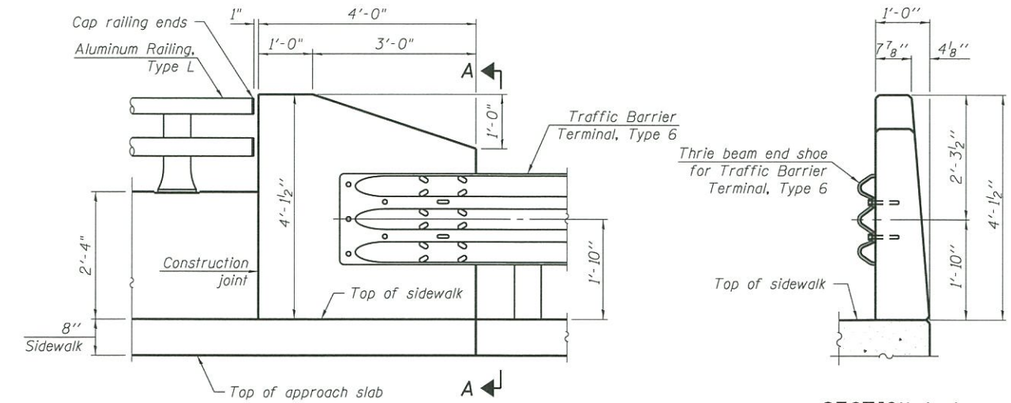

WEST ELEVATION

SECTION A-A

RAILING END TREATMENT AT SOUTH END OF EAST PARAPET

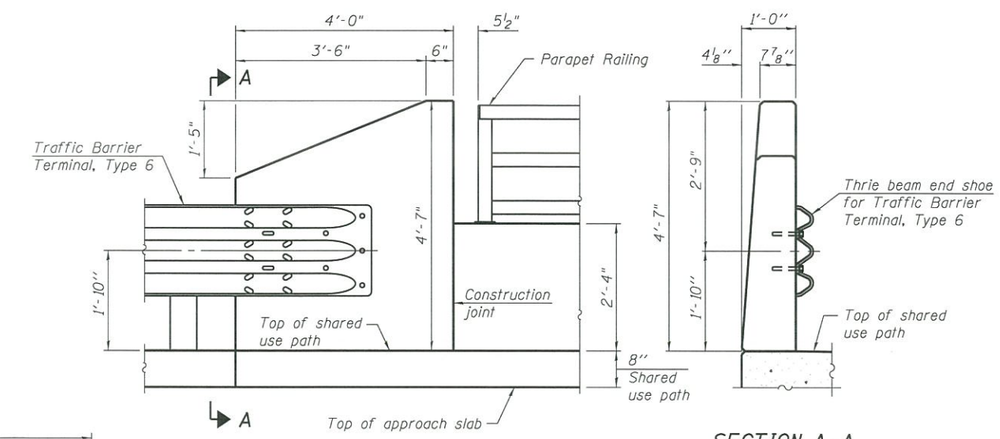

EAST ELEVATION

SECTION A-A

RAILING END TREATMENT AT SOUTH END OF WEST PARAPET

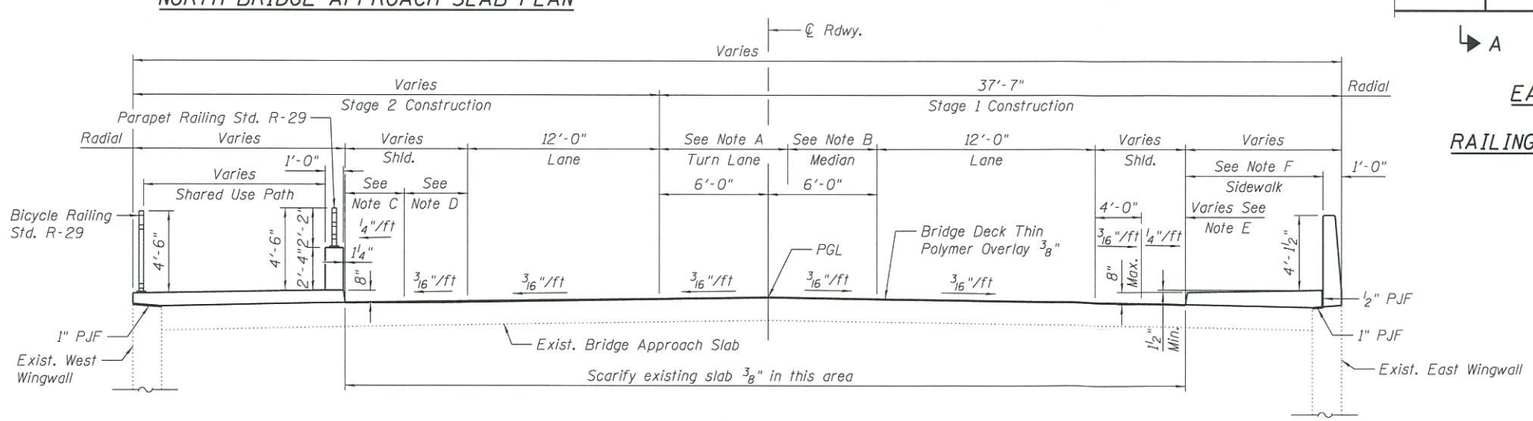

SECTION AT NORTH APPROACH SLAB
(Looking North)

APPROVED
APR 29 2016
AS A BASIS FOR PREPARATION OF DETAILED PLANS

DETAILS
ASHLAND AVENUE OVER LITTLE CALUMET RIVER
F.A.U. RTE. 2857 - SECTION 146(B)R
COOK COUNTY
STA. 265+55.89
STRUCTURE NUMBER 016-0301

INFRASTRUCTURE ENGINEERING INCORPORATED, 33 West Monroe | Suite 1540 | Chicago, IL 60603, P 312.425.9560 | F 312.425.9561 | www.infrastructure-eng.com	USER NAME =	DESIGNED - SPK	REVISED -	STATE OF ILLINOIS DEPARTMENT OF TRANSPORTATION		F.A.U RTE. 2857	SECTION 146(B)R
		CHECKED - PK	REVISED -				COUNTY COOK
	PLOT SCALE =	DRAWN - PK	REVISED -				TOTAL SHEETS / SHEET NO.
	PLOT DATE =	CHECKED - SPK	REVISED -		SHEET NO. 3 OF 3 SHEETS		CONTRACT NO. 60Y72
							ILLINOIS FED. AID PROJECT

4/1/2016 2:11:06 PM P:\P-14\3824-00 IDOT Wood Street Ph II\DGN\CADD Sheets\0160301-60Y72-TSL-003.dgn