Benchmark: Control point - Cut in median, Sta. 43+61.77, offset 1.69' lt, Elev. 750.80.

Existing Structure: S.N. 016-0575 carrying Sauk Tail over I-57 (Dan Ryan Expressway) was built in 1966 under Contract 24650 as project I-57-7(141) 341, Section 0203-1001-HB. The structure consists of two 89'-4" continuous steel plate girder non-composite interior spans and two 30'-1" vaulted approach spans. The structure is skewed 16°50'00" and is 243'-0" back to back of the vaulted approach span bents. The existing structure is 82'-0" wide. There are sign structures attached to the bridge, they will be removed and reinstalled after construction.

One lane of traffic in each direction will be maintained utilizing stage construction.

Salvage: Aluminum Handrail.

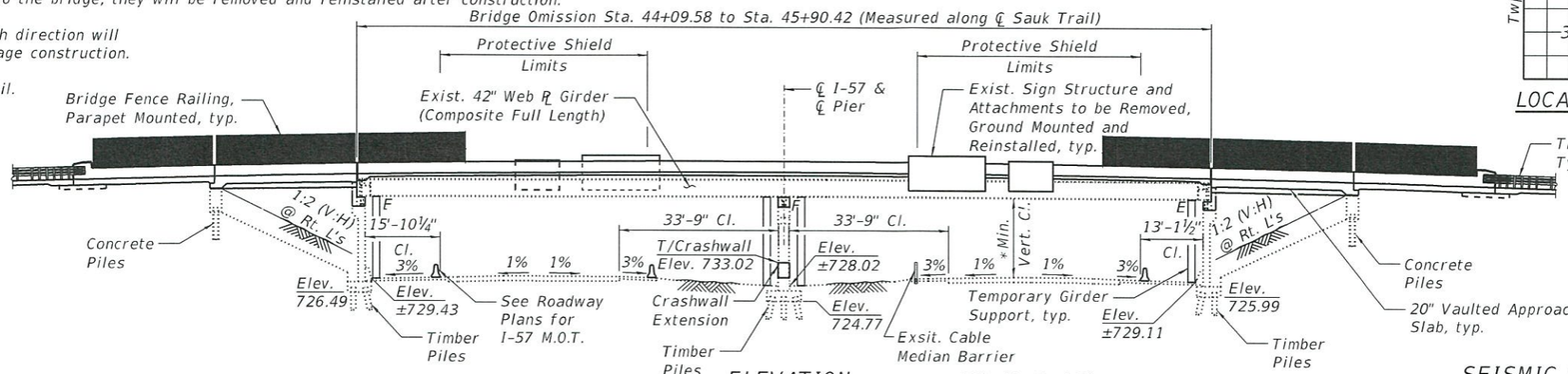

ELEVATION

*Min. Vertical Clearance
16'-10½" (Exist. profile on I-57)
16'-6" (Future profile on I-57)

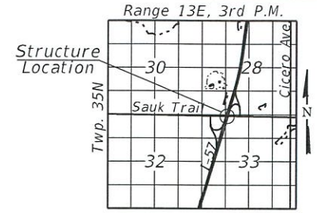

LOCATION SKETCH

SEISMIC DATA

Seismic Performance Category (SPC) = A
Horizontal Bedrock Acceleration Coefficient = 0.04g
Site Coefficient (S) = 1.5

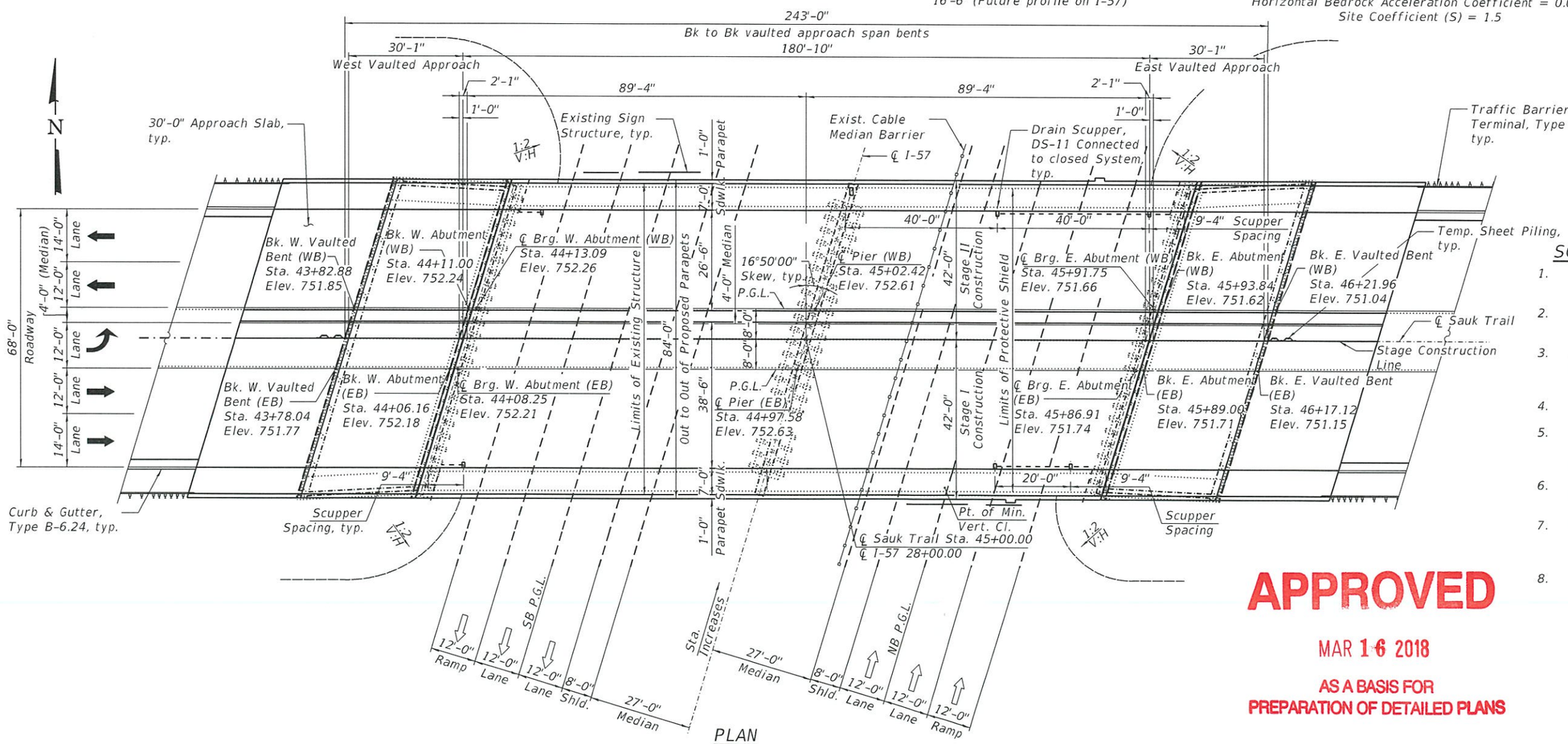

PLAN

HIGHWAY CLASSIFICATION

Sauk Trail - F.A.U. Rte. 1632
Functional Class: Minor Arterial
ADT: 10,300 (2014); 10,815 (2032)
ADTT: 420 (2010); 433 (2032)
DHV: 1050 (2010); 1082 (2032)
Design Speed: 40 m.p.h.
Posted Speed: 40 m.p.h.
Two-Way Traffic
Directional Distribution: 50:50

HIGHWAY CLASSIFICATION

F.A.I. Rte. 57 - I-57
Functional Class: Interstate
ADT: 44300 (2011); 45629 (2036)
ADTT: 16% (2011)
DHV: 4,430 (2011); 4,560 (2036)
Design Speed: 65 m.p.h.
Posted Speed: 65 m.p.h.
Two-Way Traffic
Directional Distribution: 50:50

DESIGN SPECIFICATIONS

2017 AASHTO Standard Specifications for Highway Bridges

DESIGN STRESSES

FIELD UNITS
(NEW CONSTRUCTION)
f'c = 4,000 psi (Superstructure Concrete)
f'c = 3,500 psi (Substructure Concrete)
fy = 60,000 psi (Reinforcement)
fy = 36,000 psi (M270 Grade 36)

DESIGN STRESSES

FIELD UNITS
(EXISTING CONSTRUCTION)
f'c = 3,500 psi
fy = 40,000 psi (Reinforcement)
fy = 36,000 psi (M270 Grade 36)

LOADING HS-20

No future wearing surface will be allowed.

SCOPE OF WORK

1. Remove and replace existing concrete deck, vaulted approach spans and approach slabs.
2. Raise existing steel girders and replace bearings.
3. Add shear studs to the existing girders to make deck composite in positive and negative moment areas.
4. Repair steel girders and diaphragms as necessary.
5. Construct concrete seats for the new elastomeric bearings on abutments and new fixed bearings on pier.
6. Formed concrete repair and epoxy crack sealing to be performed on the substructure units.
7. The existing vaulted span access panels to be removed and replaced with aluminum hinged access doors in wingwalls.
8. Clean and paint all existing structural steel.

APPROVED
MAR 16 2018
AS A BASIS FOR PREPARATION OF DETAILED PLANS

GENERAL PLAN AND ELEVATION
SAUK TRAIL OVER I-57
F.A.U. 1632
SECTION 0203-1001HB-BR
COOK COUNTY
STATION 45+00.00
STRUCTURE NO. 016-0575

COLLINS ENGINEERS 123 N. Wacker Dr. Suite 900 Chicago, Illinois 60606 Phone: (312) 236-1200 Fax: (312) 236-9350 www.collinseng.com ILLINOIS PROFESSIONAL DESIGN FIRM LICENSE NO. 184-000993

USER NAME =	DESIGNED - BMS	REVISED -	
	CHECKED - EKM	REVISED -	
PLOT SCALE =	DRAWN - PRH	REVISED -	
PLOT DATE = 3/5/2018	CHECKED - BMS	REVISED -	

STATE OF ILLINOIS
DEPARTMENT OF TRANSPORTATION

GENERAL PLAN AND ELEVATION
STRUCTURE NO. 016-0575
SHEET NO. S-1 OF S-3 SHEETS

F.A.U. RTE.	SECTION	COUNTY	TOTAL SHEETS	SHEET NO.
1632	0203-1001-HB-BR	COOK	3	1
		CONTRACT NO. 62F29		
		ILLINOIS FED. AID PROJECT		

3/5/2018 5:04:49 PM ILN:0303 PTB 182 04\0303.09 - Interstate 57 at Sauk Trail\CAD\CADD_Sheets\Structural\TSL\060575-D62F29-001-gpe.dgn

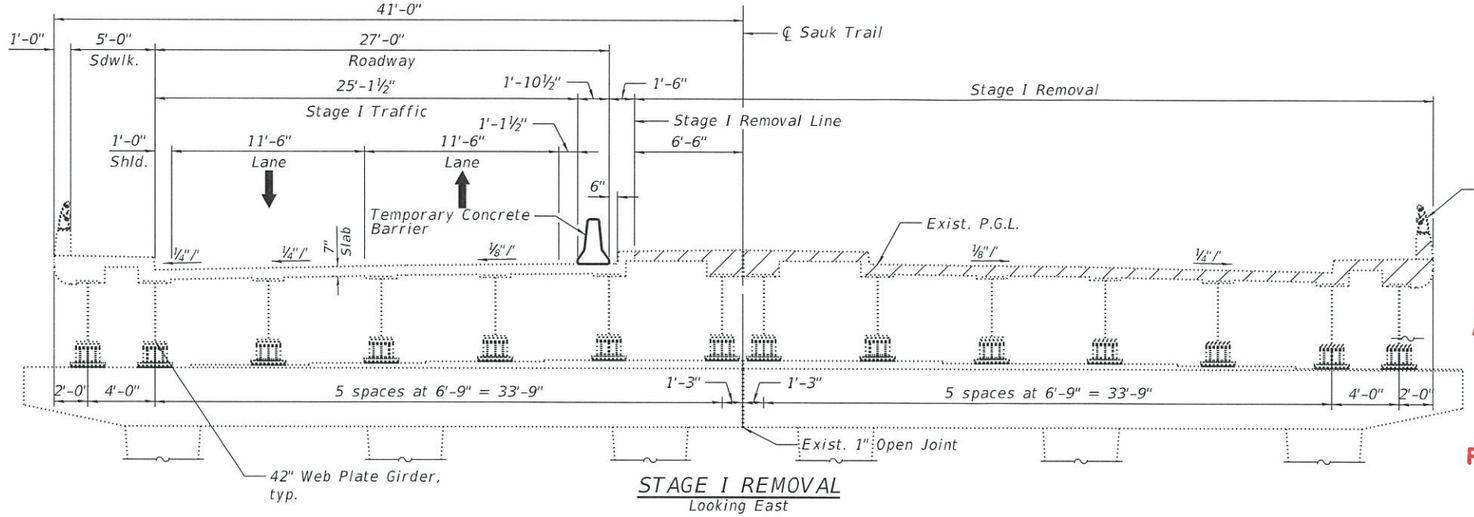

STAGE I REMOVAL
Looking East

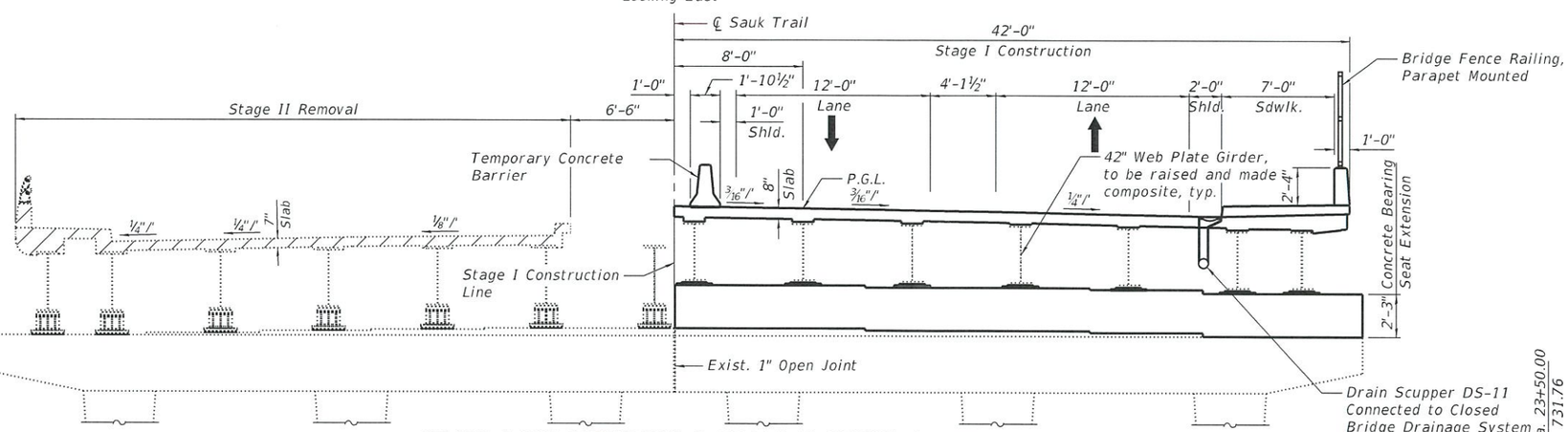

STAGE I CONSTRUCTION & STAGE II REMOVAL
Looking East
84'-0" out to out of deck

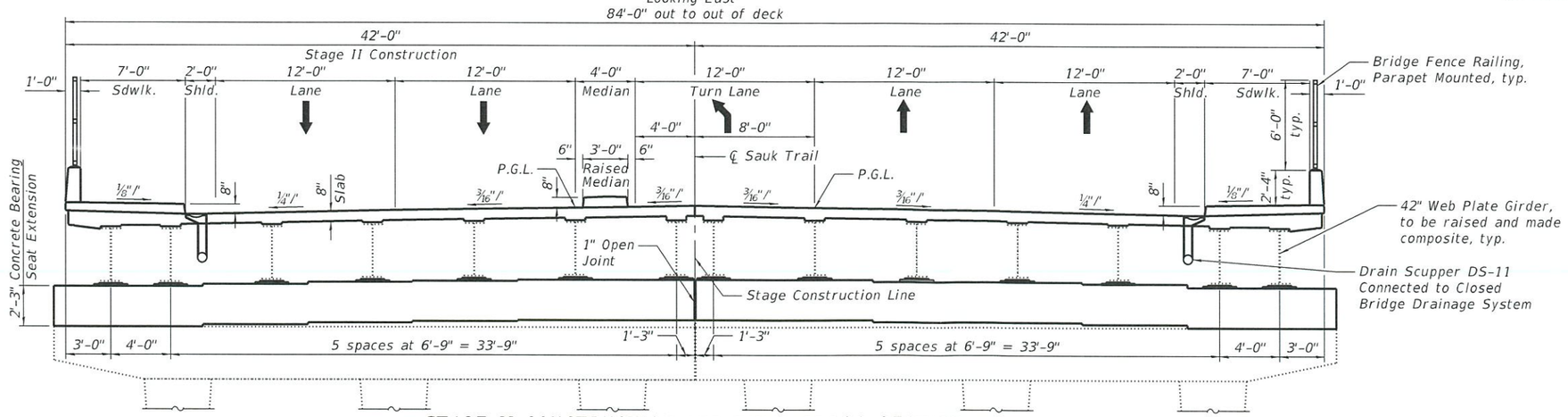

STAGE II CONSTRUCTION AND FINAL CROSS SECTION
Looking East

APPROVED
MAR 16 2018
AS A BASIS FOR
PREPARATION OF DETAILED PLANS

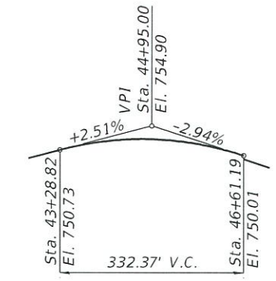

PROPOSED PROFILE
(Along WB & EB Sauk Trail P.G.L.)

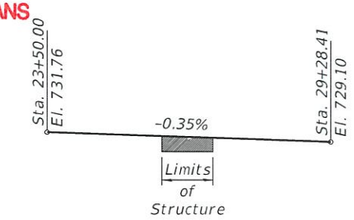

EXISTING PROFILE
(Along NB & SB I-57 P.G.L.)

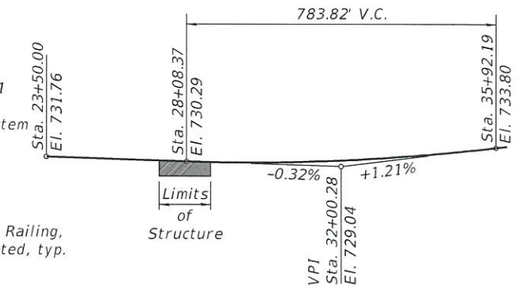

PROPOSED FUTURE PROFILE
(Along NB & SB I-57 P.G.L.)
Project Report provides future profile information for I-57 to be constructed under separate contract.

LEGEND

Denotes Removal

COLLINS ENGINEERS 123 N. Wacker Dr. Chicago, Ill. 60606 Phone: (312) 704-4500 Fax: (312) 704-4330 ILLINOIS PROFESSIONAL DESIGN FIRM LICENSE NO. 184-000993	USER NAME =	DESIGNED - BMS	REVISED -
		CHECKED - EKM	REVISED -
	PLOT SCALE =	DRAWN - PRH	REVISED -
	PLOT DATE = 3/5/2018	CHECKED - BMS	REVISED -

STATE OF ILLINOIS
DEPARTMENT OF TRANSPORTATION

CONSTRUCTION STAGING I
STRUCTURE NO. 016-0575
SHEET NO. S-2 OF S-3 SHEETS

F.A.U. RTE.	SECTION	COUNTY	TOTAL SHEETS	SHEET NO.
1632	0203-1001-HB-BR	COOK	3	2
		CONTRACT NO. 62F29		
		ILLINOIS FED. AID PROJECT		

3/5/2018 12:04:40 PM s:\0303 PTB 182 04\0303.09 - Interstate 57 at Sauk Trail\CAD\CADD_Sheets\Structure\TSL\016D575-062F29-002-staging_I.dgn

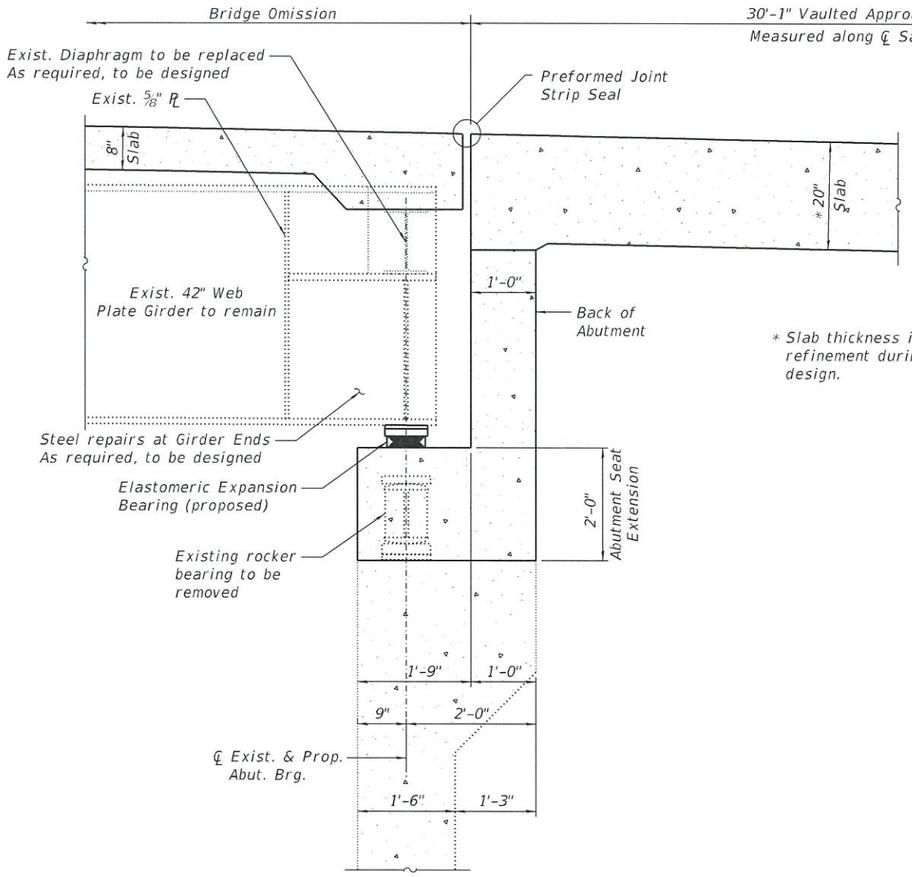

SECTION AT ABUTMENT

* Slab thickness is subject to refinement during final design.

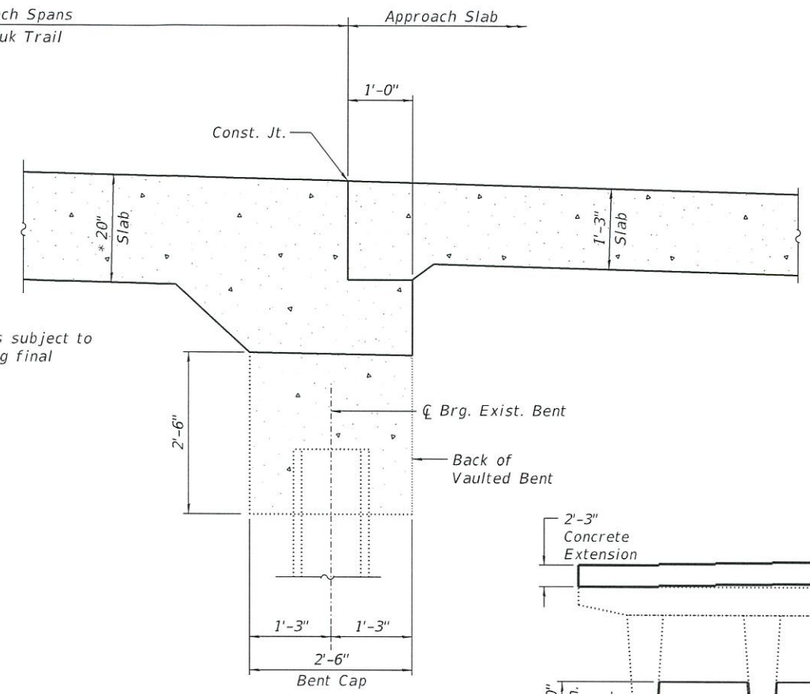

SECTION AT BENT

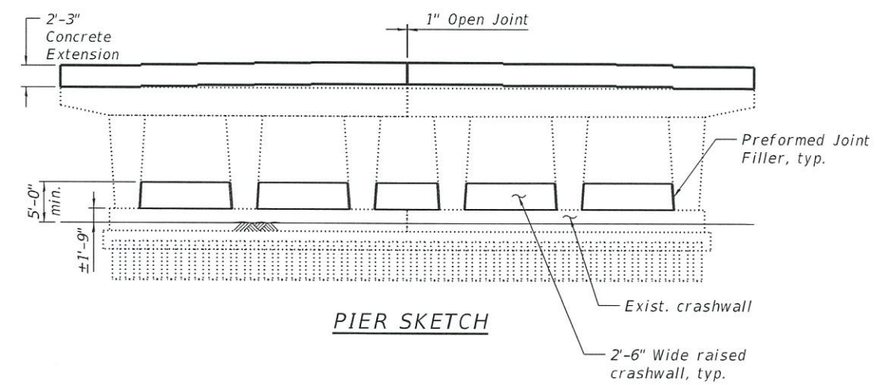

PIER SKETCH

VAULTED APPROACH SPAN

(Horiz. dimensions at Rt. L), except as noted

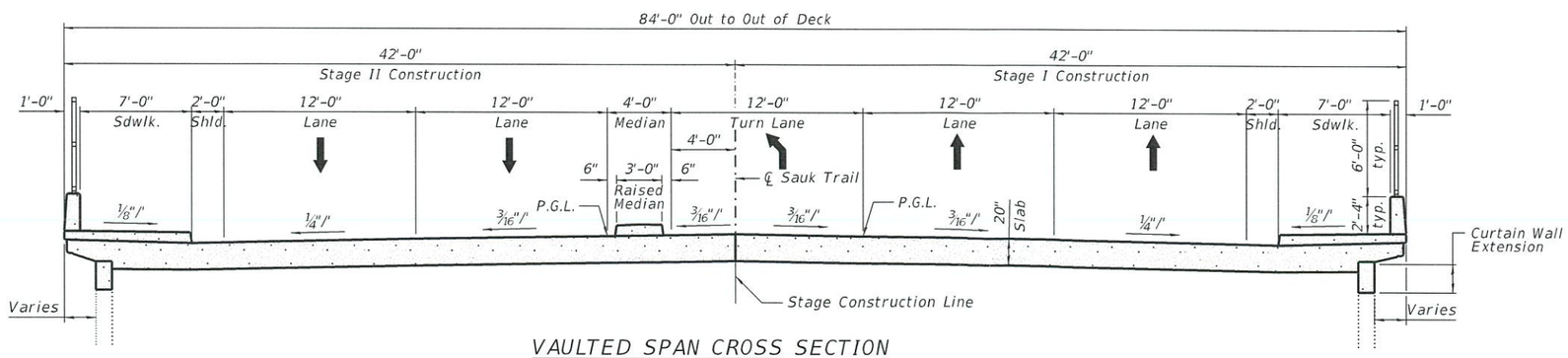

VAULTED SPAN CROSS SECTION

APPROVED

MAR 16 2018

AS A BASIS FOR
PREPARATION OF DETAILED PLANS

COLLINS ENGINEERS	USER NAME =	DESIGNED - BMS	REVISED -	STATE OF ILLINOIS DEPARTMENT OF TRANSPORTATION	VAULTED APPROACH SPAN STRUCTURE NO. 016-0575	F.A.U. RTE.	SECTION	COUNTY	TOTAL SHEETS / SHEET NO.
		CHECKED - EKM	REVISED -			1632	0203-1001-HB-BR	COOK	3 / 3
	PLOT SCALE =	DRAWN - PRH	REVISED -					CONTRACT NO. 62F29	
	PLOT DATE = 3/5/2018	CHECKED - BMS	REVISED -		SHEET NO. S-3 OF S-3 SHEETS		ILLINOIS	FED. AID PROJECT	

3/5/2018 12:04:41PM is\10303 PTB 182 04\10303.09 - Interstate 57 at Sauk Trail\CAD\CADD.Sheets\Structural\TSL\060575-062F29-003-vaulted appr.dgn