Bench Mark: Cut "X" at SE Corner of Van Buren and Halsted Streets. Elev. 593.24.

Existing Structure: None.

Traffic is to be maintained during construction.

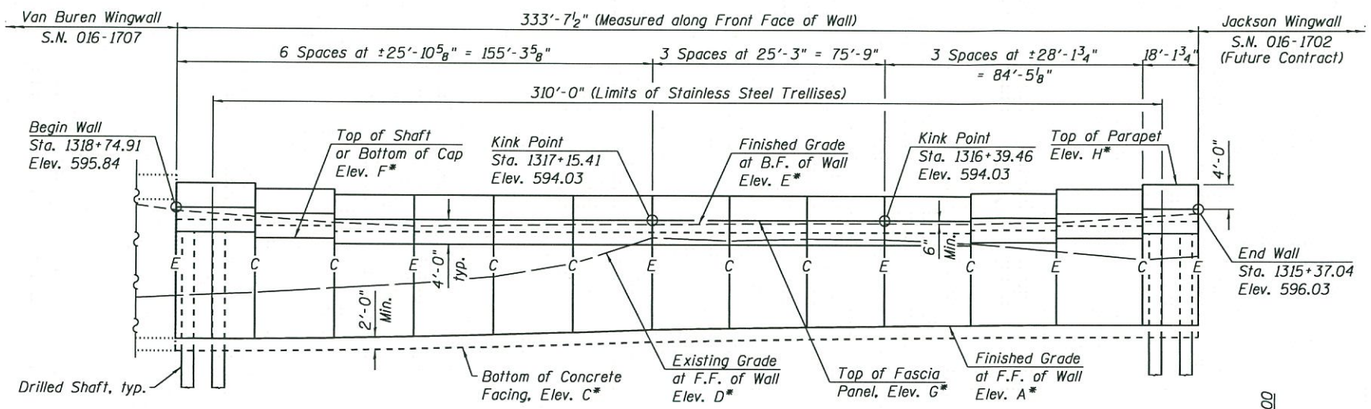

* For elevations, see Table 1 on Sheet 3 of 3.

ELEVATION

(Looking Northwest at F.F. of Wall, Proposed Concrete Barrier not shown for clarity)

APPROVED

MAR 23 2016

AS A BASIS FOR PREPARATION OF DETAILED PLANS

Notes:

1.) Wall offsets are measured from the ℄ Prop. Ramp SW to the front face of cast-in-place fascia panels.
2.) C denotes Construction Joint
3.) E denotes Expansion Joint
4.) F.F. denotes Front Face.
5.) B.F. denotes Back Face.
6.) Wall to be built along straight chords between construction joints.
7.) Shaft diameter, spacing and tip elevation to be determined during final design.
8.) Stainless Steel Trellises to be installed on the face of the wall.
9.) 16" Water main to remain. Water main relocation and riser shaft construction as part of future Jackson Boulevard bridge reconstruction.

CURVE DATA

(Ramp SW)
Prop. Curve P-CIR-SW-3
P.I. Sta. = 1322+16.98
Δ = 83° 35' 08" (RT)
D = 10° 03' 07"
R = 570.00'
T = 509.51'
L = 831.54'
E = 194.53'
e = 5.40%
T.R. = NA
S.E. Run = 101'
P.C. Sta. = 1317+07.47
P.T. Sta. = 1325+39.01

HIGHWAY CLASSIFICATION

Ramp SW
Functional Class: Interstate
ADT: 24,500 (2012); 23,000 (2040)
ADTT: 907 (2012); 851 (2040)
DHV: 1,720 (2040)
Design Speed: 35 m.p.h.
Posted Speed: 35 m.p.h.
One-Way Traffic
Directional Distribution: NA

DESIGN SPECIFICATIONS

2014 AASHTO LRFD Bridge Design Specifications 7th Edition with 2015 Interim

DESIGN STRESSES

FIELD UNITS

f'c = 7,000 psi (Drilled Shafts)**
f'c = 3,500 psi (All other concrete)
fy = 60,000 psi (Reinforcement)

** Final concrete strength will be determined during final design

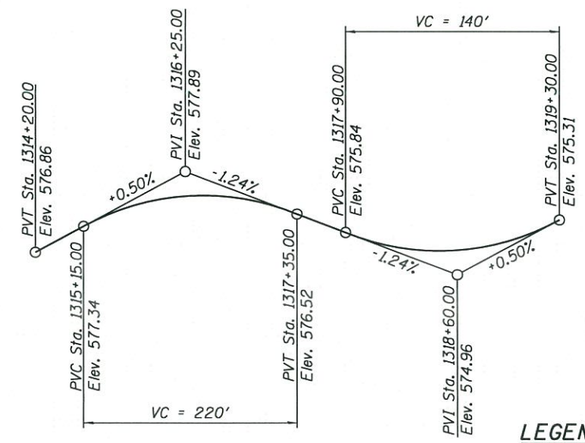

PROFILE GRADE

(Along ℄ Ramp SW)

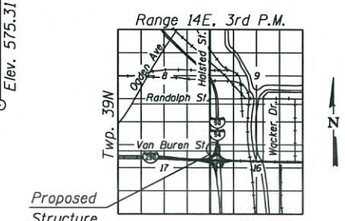

LOCATION SKETCH

LEGEND:

- Ex. Chain Link Fence
- Combined Sewer
- Electric
- Water
- Fiber Optic
- Ex. Storm Sewer
- Prop. Storm Sewer
- Soil Boring

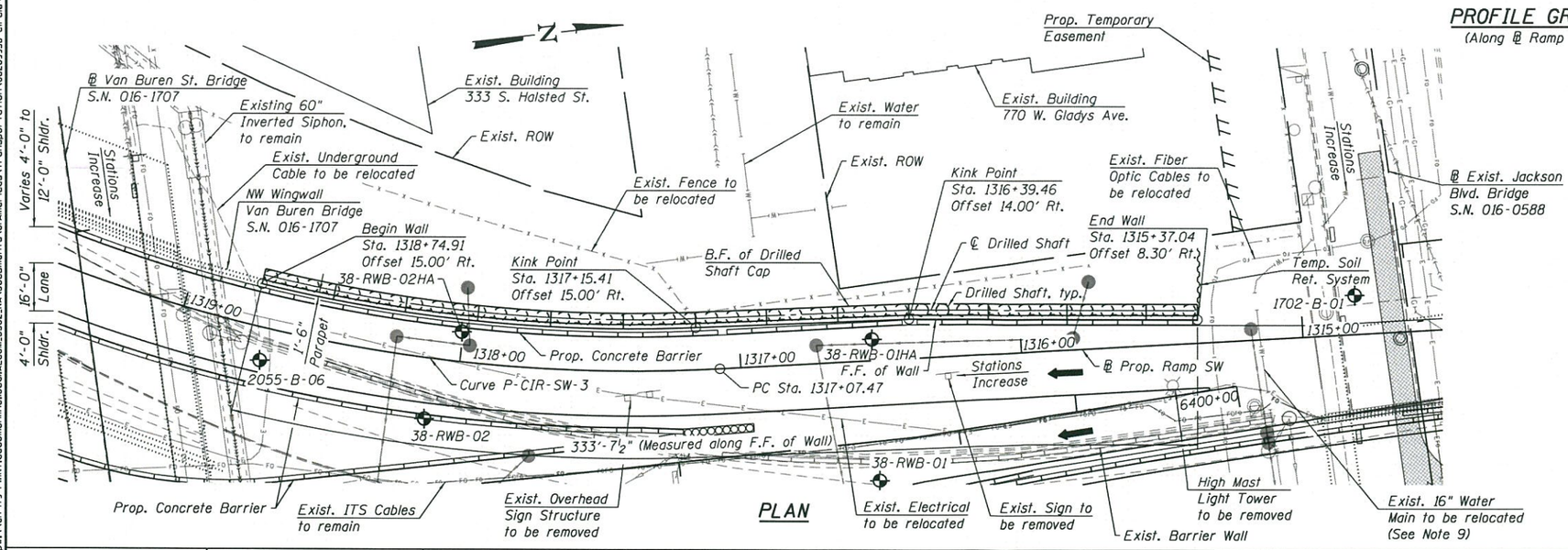

PLAN

GENERAL PLAN AND ELEVATION
RETAINING WALL 38 ALONG RAMP SW
F.A.I. RTE. 290 (EISENHOWER EXPRESSWAY)
SECTION xxxx-xxxx
COOK COUNTY
STATION 1315+37.04 TO STATION 1318+74.91
STRUCTURE NO. 016-1827

TranSystems	USER NAME = wjcolletti	DESIGNED - WJC	REVISED -
		CHECKED - DL	REVISED -
	PLOT SCALE = 48.00 ' / in.	DRAWN - WJC	REVISED -
	PLOT DATE = 3/3/2016	CHECKED - DL	REVISED -

STATE OF ILLINOIS
DEPARTMENT OF TRANSPORTATION

SHEET NO. 1 OF 3 SHEETS

F.A.I. RTE.	SECTION	COUNTY	TOTAL SHEETS	SHEET NO.
290	xxxx-xxxx	COOK	3	1
		CONTRACT NO. 60X99		
		ILLINOIS FED. AID PROJECT		

3:29:44 PM - pw:\\617479-PWINT.cacomonline.local:ECOM_DS02_NA\Documents\01Americas\Transportation\60269938 Circle\Phase.IV\000.CAD\008.Structural\Structure_016-1827\TSL\Sheets\016827-60X99-SHT-TSL-001

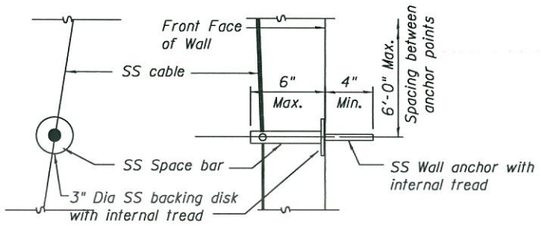

SS CABLE WALL MOUNT UNIT DETAIL

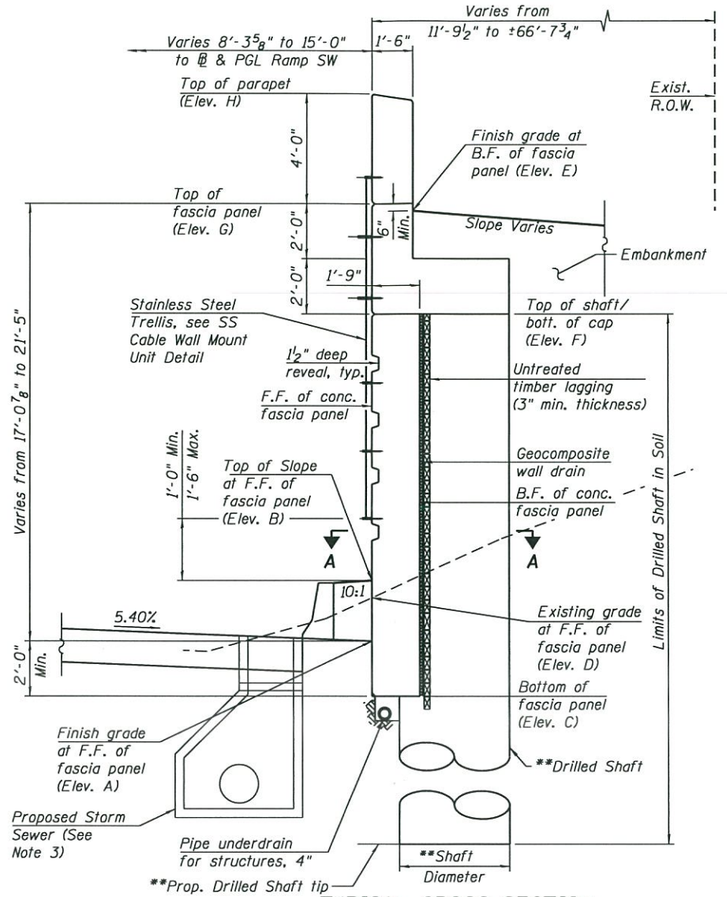

TYPICAL CROSS SECTION

(Looking Upstation)
(From Sta. 1315+37.04 to Sta. 1316+75.00 and Sta. 1317+25.00 to Sta. 1318+74.91)

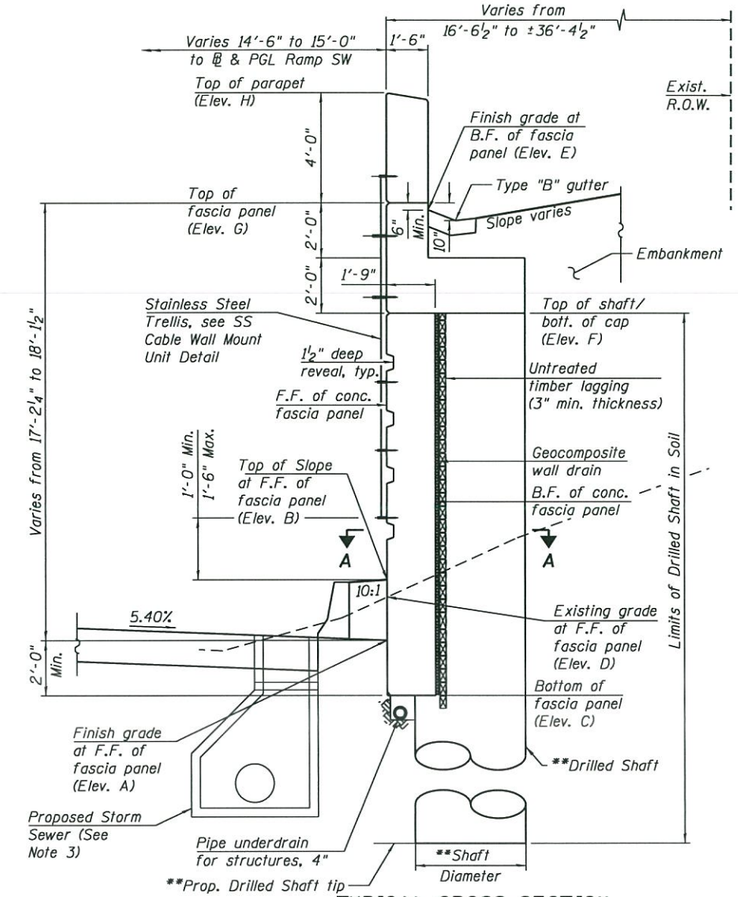

TYPICAL CROSS SECTION

(Looking Upstation)
(From Sta. 1316+75.00 to Sta. 1317+25.00)

**Drilled shaft diameter, spacing and tip elevation to be determined during final design.

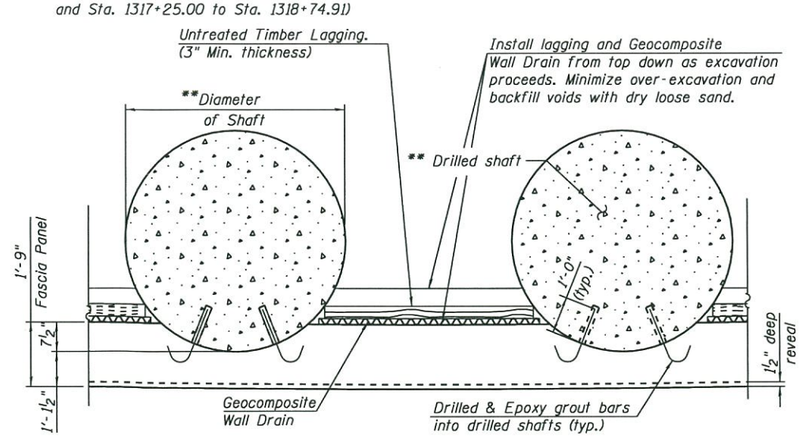

SECTION A-A

(Shaft Reinforcement not shown for clarity)

Notes:
1.) For wall elevations, see Table 1 on Sheet 3 of 3.
2.) Type, size and location of SS Wall Anchor shall be determined in final design.
3.) Size, location, and invert elevations of storm sewer shall be determined in final design.

LEGEND:

B.F. - denotes Back Face.
E.F. - denotes Each Face.
F.F. - denotes Front Face.
SS - denotes Stainless Steel.

APPROVED
MAR 23 2016
AS A BASIS FOR PREPARATION OF DETAILED PLANS

CROSS SECTION AND DETAILS I
RETAINING WALL 38 ALONG RAMP SW
F.A.I. RTE. 290 (EISENHOWER EXPRESSWAY)
SECTION xxxx-xxxx
COOK COUNTY
STATION 1315+37.04 TO STATION 1318+74.91
STRUCTURE NO. 016-1827

TranSystems

USER NAME = wjcolletti	DESIGNED - WJC	REVISED -	
	CHECKED - DL	REVISED -	
PLOT SCALE = 0.17 ' / in.	DRAWN - WJC	REVISED -	
PLOT DATE = 3/3/2016	CHECKED - DL	REVISED -	

STATE OF ILLINOIS
DEPARTMENT OF TRANSPORTATION

SHEET NO. 2 OF 3 SHEETS

F.A.I. RTE.	SECTION	COUNTY	TOTAL SHEETS	SHEET NO.
290	xxxx-xxxx	COOK	3	2
		CONTRACT NO. 60X99		
		ILLINOIS FED. AID PROJECT		

3:56:59 PM - pw:\\6f7479-PWINT.aecomonline.local:AECOM_DS02_NA\Documents\01 Americas\Transportation\60269938 Circle\Phase_II\000_CAD\008_Structural\Structure_016-1827\TSL\Sheets\016827-60X99-SHT-TSL-002

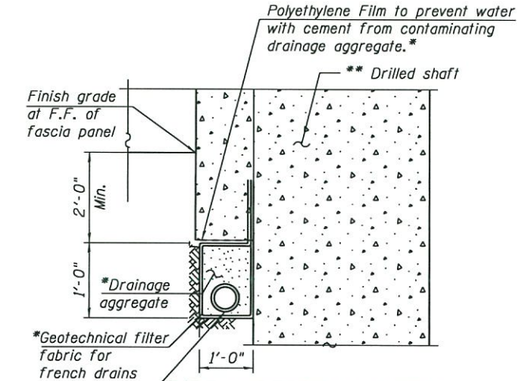

PIPE UNDERDRAIN DETAIL AT DRILLED SHAFT

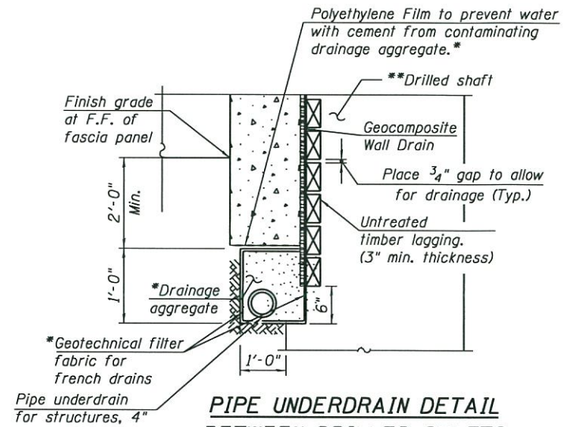

PIPE UNDERDRAIN DETAIL BETWEEN DRILLED SHAFTS

TABLE 1 - WALL ELEVATIONS

	Station	Offset	Elevation A	Elevation B	Elevation C	Elevation D	Elevation E	Elevation F	Elevation G	Elevation H
	1315+37.04	8'-3 5/8"	577.10	580.68	575.10	588.36	595.31	592.03	596.03	600.03
†	1315+55.16	9'-3 3/4"	577.10	580.68	575.10	587.77	594.72	592.03	596.03	600.03
††	1315+55.16	9'-3 3/4"	577.10	580.68	575.10	587.77	594.72	591.28	595.28	599.28
†	1315+83.26	10'-10 1/2"	577.06	580.64	575.06	589.10	593.80	591.28	595.28	599.28
††	1315+83.26	10'-10 1/2"	577.06	580.64	575.06	589.10	593.80	590.53	594.53	598.53
†	1316+11.36	12'-5 1/4"	576.96	580.54	574.96	590.33	593.53	590.53	594.53	598.53
††	1316+11.36	12'-5 1/4"	576.96	580.54	574.96	590.33	593.53	590.03	594.03	598.03
	1316+39.46	14'-0"	576.79	580.37	574.79	590.93	593.53	590.03	594.03	598.03
	1316+64.70	14'-4 1/4"	576.62	580.22	574.62	591.00	593.53	590.03	594.03	598.03
	1316+89.95	14'-8 3/8"	576.41	580.02	574.41	590.71	593.45	590.03	594.03	598.03
	1317+15.41	15'-0"	576.15	579.87	574.15	591.16	593.31	590.03	594.03	598.03
	1317+41.99	15'-0"	575.69	579.44	573.69	586.92	593.30	590.03	594.03	598.03
	1317+68.58	15'-0"	575.29	579.05	573.29	584.76	593.15	590.03	594.03	598.03
	1317+95.16	15'-0"	574.96	578.72	572.96	583.61	592.99	590.03	594.03	598.03
†	1318+21.74	15'-0"	574.69	578.46	572.69	582.83	593.48	590.03	594.03	598.03
††	1318+21.74	15'-0"	574.69	578.46	572.69	582.83	593.48	590.95	594.95	598.95
†	1318+48.33	15'-0"	574.51	578.27	572.51	582.02	594.42	590.95	594.95	598.95
††	1318+48.33	15'-0"	574.51	578.27	572.51	582.02	594.42	591.84	595.84	599.84
	1318+74.91	15'-0"	574.42	578.18	572.42	581.41	595.34	591.84	595.84	599.84

Elevation A- Finish Grade at Front Face of Fascia Panel
Elevation B- Top of Slope at Front Face of Fascia Panel
Elevation C- Bottom of Fascia Panel
Elevation D- Existing Grade at Front Face of Fascia Panel
Elevation E- Finish Grade at Back Face of Fascia Panel
Elevation F- Top of Shaft / Bottom of Cap
Elevation G- Top of Fascia Panel
Elevation H- Top of Parapet
† Elevations just to the right of joint.
†† Elevations just to the left of joint.

APPROVED
MAR 23 2016
AS A BASIS FOR PREPARATION OF DETAILED PLANS

*Cost included with "Pipe Underdrains for Structures, 4".

**Drilled shaft diameter, spacing and tip elevation to be determined during final design.

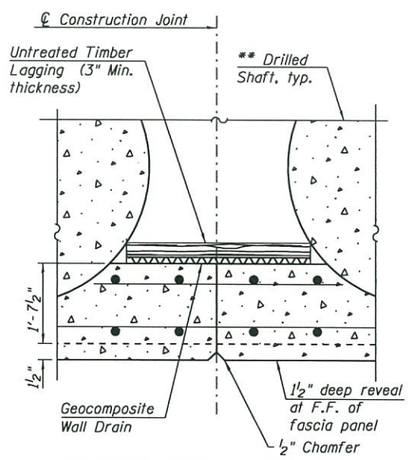

CONSTRUCTION JOINT DETAILS

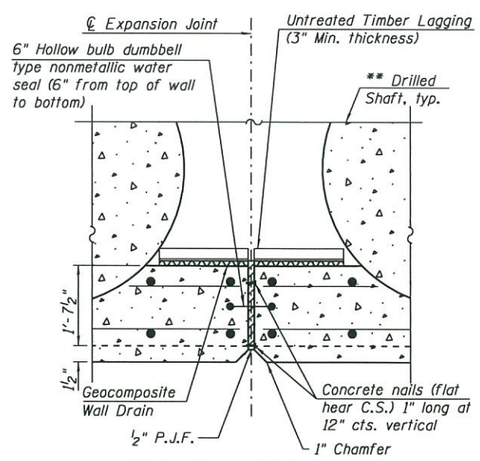

EXPANSION JOINT DETAILS

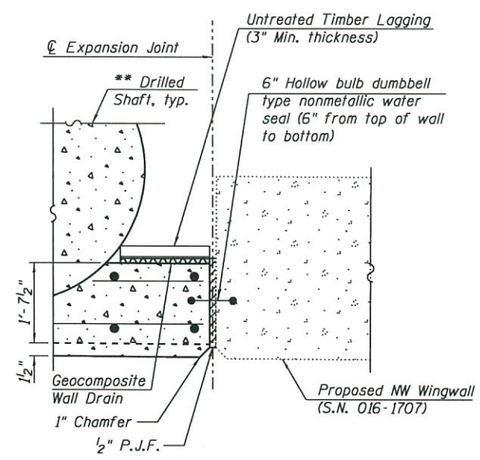

EXPANSION JOINT DETAIL AT VAN BUREN WINGWALL

LEGEND:

B.F. - denotes Back Face.
E.F. - denotes Each Face.
F.F. - denotes Front Face.

CROSS SECTION AND DETAILS II
RETAINING WALL 38 ALONG RAMP SW
F.A.I. RTE. 290 (EISENHOWER EXPRESSWAY)
SECTION xxxx-xxxx
COOK COUNTY
STATION 1315+37.04 TO STATION 1318+74.91
STRUCTURE NO. 016-1827