Bench Mark: Cut "X" on southwest balcony of Jackson Blvd. Bridge. Elev. 597.26.

Existing Structure: None.

Traffic is to be maintained during construction.

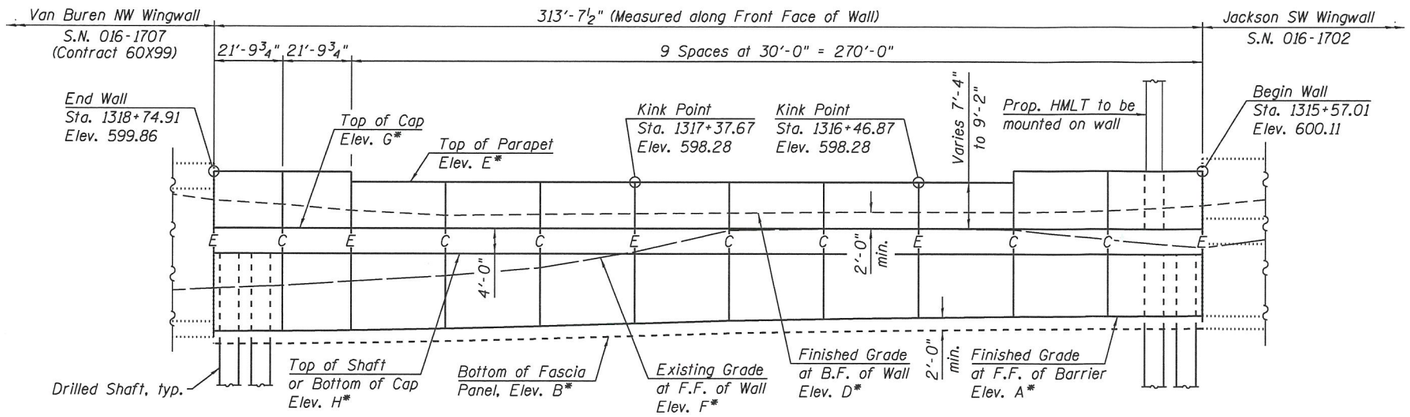

* For elevations, see Table 1 on Sheet 3 of 3.

ELEVATION

(Looking West at F.F. of Wall, Proposed Concrete Barrier not shown for clarity.)

Notes:

1.) Wall offsets are measured from the ℄ Prop. Ramp SW to the front face of cast-in-place fascia panels.
2.) C denotes Construction Joint
3.) E denotes Expansion Joint
4.) F.F. denotes Front Face.
5.) B.F. denotes Back Face.
6.) Wall to be built along straight chords between construction joints.
7.) Shaft diameter, spacing and tip elevation to be determined during final design.
8.) Proposed drainage information shown is conceptual and will be determined during final design.

APPROVED

FEB 14 2019

AS A BASIS FOR PREPARATION OF DETAILED PLANS

CURVE DATA

(Ramp SW)
Prop. Curve P-CIR-SW-3
P.I. Sta. = 1322+16.98
Δ = 83° 35' 08" (RT)
D = 10° 03' 07"
R = 570.00'
T = 509.51'
L = 831.54'
E = 194.53'
e = 5.40%
T.R. = NA
S.E. Run = 101'
P.C. Sta. = 1317+07.47
P.T. Sta. = 1325+39.01

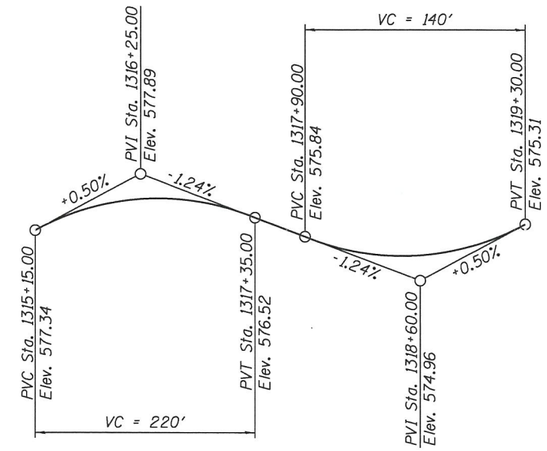

PROFILE GRADE

(Along ℄ Ramp SW)

HIGHWAY CLASSIFICATION

Ramp SW
Functional Class: Interstate
ADT: 24,500 (2012); 23,000 (2040)
ADTT: 907 (2012); 851 (2040)
DHV: 1,720 (2040)
Design Speed: 35 m.p.h.
Posted Speed: 35 m.p.h.
One-Way Traffic
Directional Distribution: 100%

DESIGN SPECIFICATIONS

2017 AASHTO LRFD Bridge Design Specifications 8th Edition

DESIGN STRESSES

FIELD UNITS

f'c = 7,000 psi (Drilled Shafts)**
f'c = 3,500 psi (All other concrete)
fy = 60,000 psi (Reinforcement)

** Final concrete strength will be determined during final design

WALL DEFLECTION CRITERIA:

Maximum total lateral wall deflection at top of wall: 1 inch

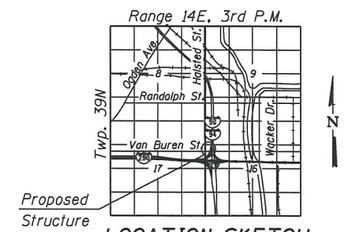

LOCATION SKETCH

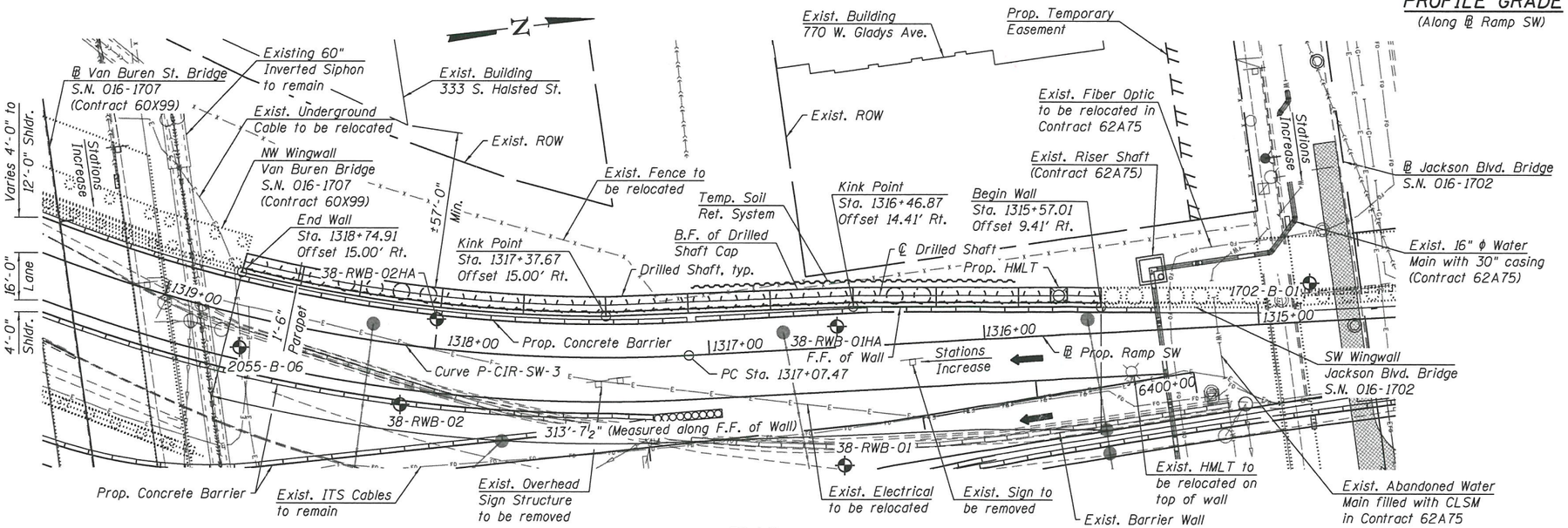

PLAN

LEGEND:

Ex. Chain Link Fence — X — X — X — X
Combined Sewer
Electric — E — E — E
Water — W — W
Fiber Optic — FO — FO — FO
Ex. Storm Sewer
Prop. Storm Sewer
Soil Boring

GENERAL PLAN
RETAINING WALL 38 ALONG RAMP SW
F.A.I. RTE. 290 (EISENHOWER EXPRESSWAY)
SECTION 2015-020B
COOK COUNTY
STATION 1315+57.01 TO STATION 1318+74.91
STRUCTURE NO. 016-1827

TranSystems

USER NAME = wjcolletti	DESIGNED - WJC	REVISED -	
	CHECKED - MDS	REVISED -	
PLOT SCALE = 48.00 ' / in.	DRAWN - WJC	REVISED -	
PLOT DATE = 11/29/2018	CHECKED - MDS	REVISED -	

STATE OF ILLINOIS
DEPARTMENT OF TRANSPORTATION

SHEET NO. 1 OF 3 SHEETS

F.A.I. RTE.	SECTION	COUNTY	TOTAL SHEETS	SHEET NO.
290	2015-020B	COOK	3	1
		CONTRACT NO. 62A78		
		ILLINOIS FED. AID PROJECT		

II:54:52 AM - Dwr\\617479-PWINT.aecomonline.local\AECOM_DS02_NA\Documents\01americas\Transportation\60269938 Circle\Phase_II\000_CAD\008_Structural\Structure_016-1827\TSL\Sheets\016827-62A78-SHT-TSL-001

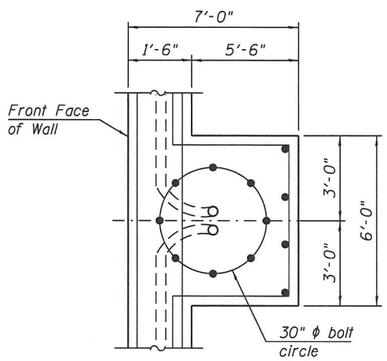

PARAPET DETAIL AT HMLT

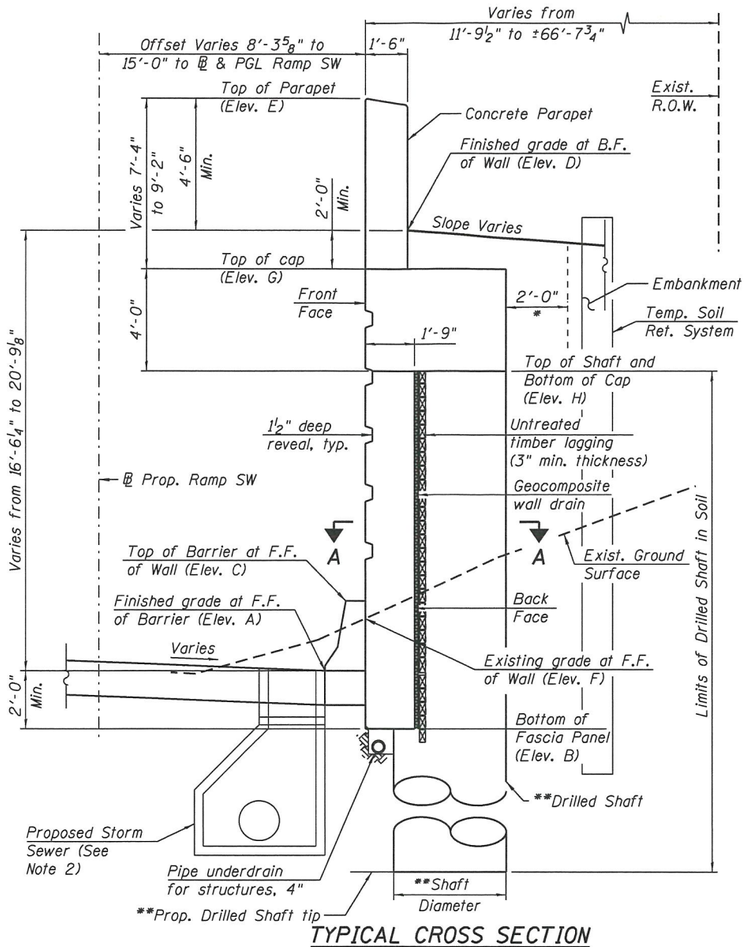

TYPICAL CROSS SECTION

(Looking Upstation)
(From Sta. 1315+37.04 to Sta. 1316+75.00 and Sta. 1317+25.00 to Sta. 1318+74.91)

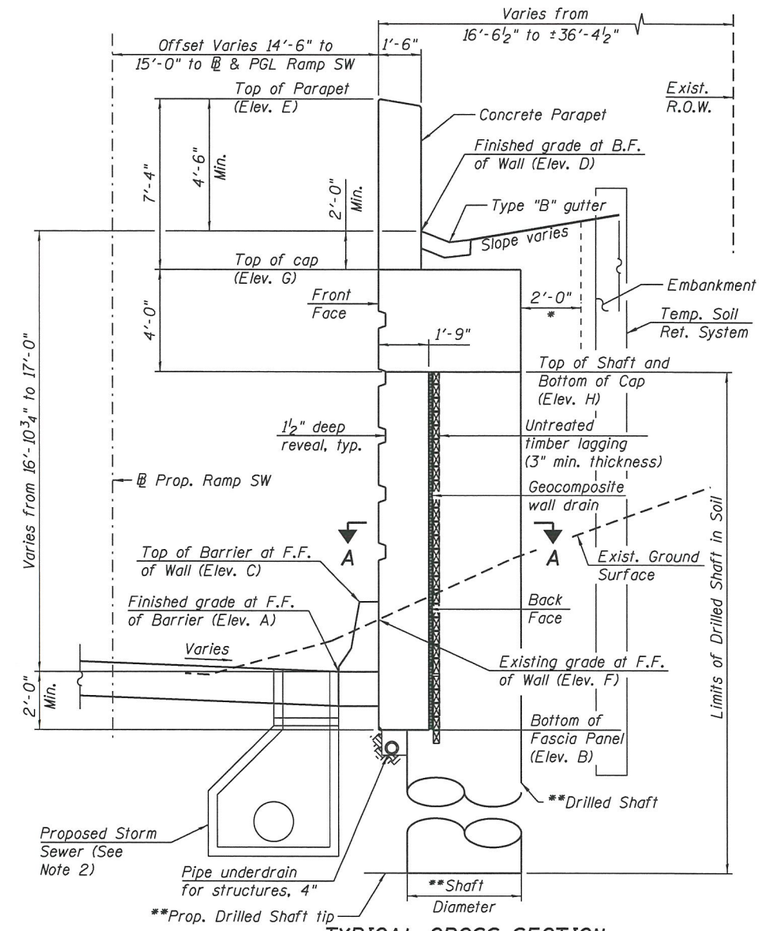

TYPICAL CROSS SECTION

(Looking Upstation)
(From Sta. 1316+75.00 to Sta. 1317+25.00)

* Limits of Structure Excavation

** Drilled shaft diameter, spacing and tip elevation to be determined during final design.

LEGEND:

B.F. - denotes Back Face.
E.F. - denotes Each Face.
F.F. - denotes Front Face.
SS - denotes Stainless Steel.

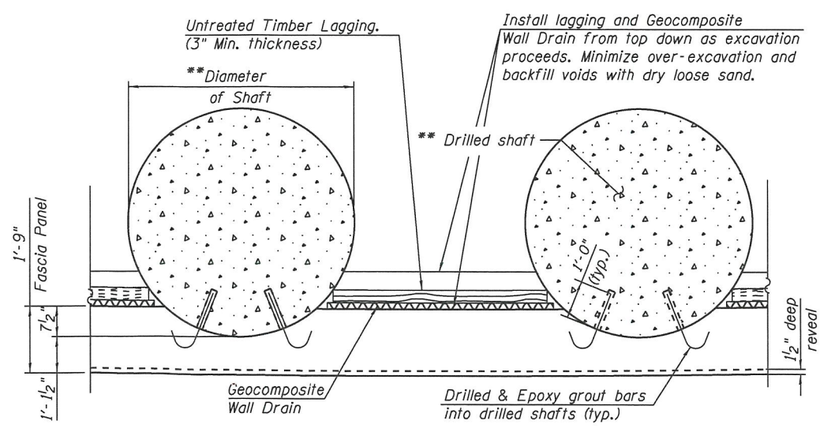

SECTION A-A

(Shaft Reinforcement not shown for clarity)

Notes:
1.) For wall elevations, see Table 1 on Sheet 3 of 3.

2.) Size, location, and invert elevations of storm sewer shall be determined in final design.

APPROVED

FEB 14 2019

AS A BASIS FOR PREPARATION OF DETAILED PLANS

CROSS SECTION AND DETAILS I
RETAINING WALL 38 ALONG RAMP SW
F.A.I. RTE. 290 (EISENHOWER EXPRESSWAY)
SECTION 2015-020B
COOK COUNTY
STATION 1315+57.01 TO STATION 1318+74.91
STRUCTURE NO. 016-1827

12:02:23 PM - pw:\\617479-PWINT.aecomonline.local:AECOM_DS02_NA\Documents\01Americas\Transportation\60269939 Circle\Phase_II\000.CAD\008.Structural\Structure_016-1827\TSL\Sheets\0161827-62A78-SHT-TSL-002

TranSystems

USER NAME = wjcolletti	DESIGNED - WJC	REVISED -	
	CHECKED - MDS	REVISED -	
PLOT SCALE = 0.17 ' / in.	DRAWN - WJC	REVISED -	
PLOT DATE = 11/29/2018	CHECKED - MDS	REVISED -	

STATE OF ILLINOIS
DEPARTMENT OF TRANSPORTATION

SHEET NO. 2 OF 3 SHEETS

F.A.I. RTE.	SECTION	COUNTY	TOTAL SHEETS	SHEET NO.
290	2015-020B	COOK	3	2
		CONTRACT NO. 62A78		
		ILLINOIS FED. AID PROJECT		

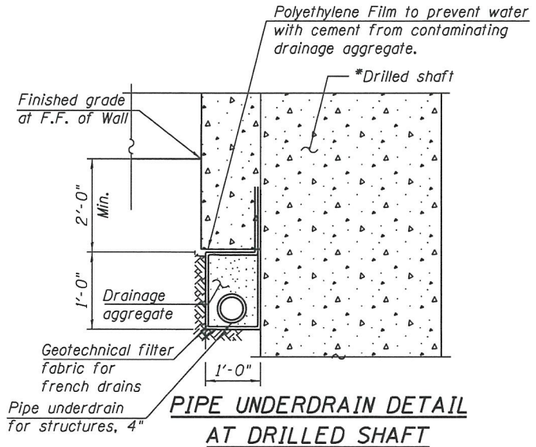

PIPE UNDERDRAIN DETAIL AT DRILLED SHAFT

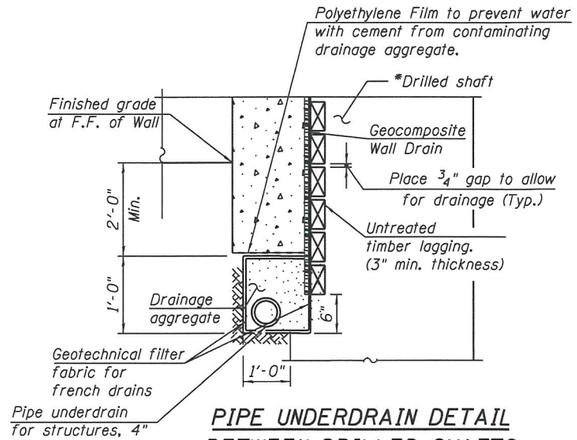

PIPE UNDERDRAIN DETAIL BETWEEN DRILLED SHAFTS

TABLE 1 - WALL ELEVATIONS

	Station	Offset	Elevation A	Elevation B	Elevation C	Elevation D	Elevation E	Elevation F	Elevation G	Elevation H
	1315+57.01	9.41' Rt.	577.18	575.18	580.68	594.63	600.11	587.97	590.94	586.94
	1315+86.97	11.08' Rt.	577.13	575.13	580.63	593.80	600.11	589.25	590.94	586.94
†	1316+16.92	12.75' Rt.	577.01	575.01	580.51	593.53	600.11	590.77	590.94	586.94
††	1316+16.92	12.75' Rt.	577.01	575.01	580.51	593.53	598.28	590.77	590.94	586.94
	1316+46.87	14.41' Rt.	576.83	574.83	580.33	593.53	598.28	590.95	590.94	586.94
	1316+76.87	14.87' Rt.	576.63	574.63	580.13	593.52	598.28	590.90	590.94	586.94
	1317+06.87	15.32' Rt.	576.36	574.36	579.86	593.36	598.28	590.65	590.94	586.94
	1317+37.67	15.00' Rt.	575.91	573.91	579.41	593.29	598.28	587.24	590.94	586.94
	1317+68.48	15.00' Rt.	575.46	573.46	578.96	593.15	598.28	584.69	590.94	586.94
	1317+99.29	15.00' Rt.	575.08	573.08	578.58	592.97	598.28	583.44	590.94	586.94
†	1318+30.10	15.00' Rt.	574.79	572.79	578.29	593.75	598.28	582.56	590.94	586.94
††	1318+30.10	15.00' Rt.	574.79	572.79	578.29	593.75	599.86	582.56	590.94	586.94
	1318+52.51	15.00' Rt.	574.65	572.65	578.15	594.68	599.86	581.85	590.94	586.94
	1318+74.91	15.00' Rt.	574.58	572.58	578.08	595.34	599.86	581.41	590.94	586.94

Elevation A- Finished Grade at Front Face of Barrier
Elevation B- Bottom of Fascia Panel
Elevation C- Top of Barrier at Front Face of Wall
Elevation D- Finished Grade at Back Face of Wall
Elevation E- Top of Parapet
Elevation F- Existing Grade at Front Face of Wall
Elevation G- Top of Cap
Elevation H- Top of Shaft / Bottom of Cap
† Elevations just to the right of joint
†† Elevations just to the left of joint

APPROVED
FEB 14 2019
AS A BASIS FOR
PREPARATION OF DETAILED PLANS

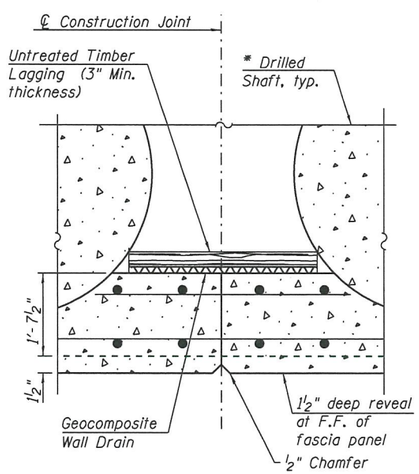

CONSTRUCTION JOINT DETAILS

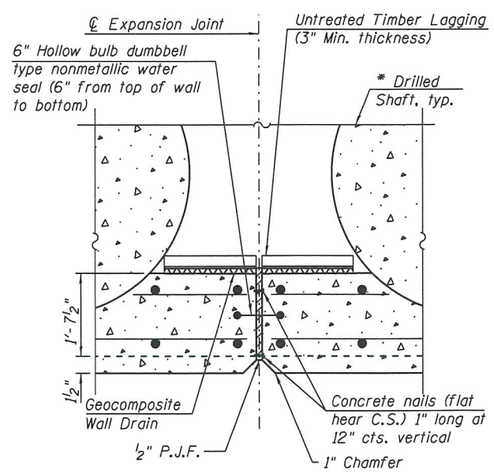

EXPANSION JOINT DETAILS

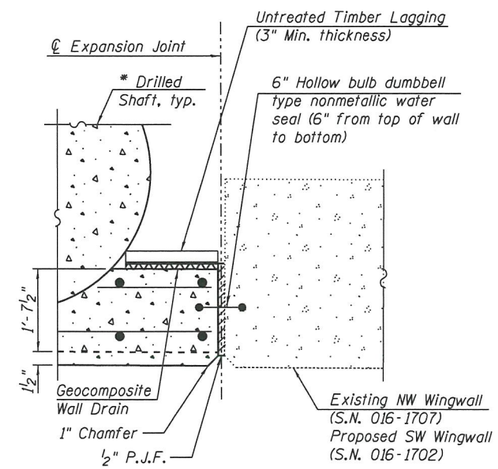

EXPANSION JOINT DETAIL AT WINGWALL

*Drilled shaft diameter, spacing and tip elevation to be determined during final design.

LEGEND:

B.F. - denotes Back Face.
E.F. - denotes Each Face.
F.F. - denotes Front Face.

CROSS SECTION AND DETAILS II
RETAINING WALL 38 ALONG RAMP SW
F.A.I. RTE. 290 (EISENHOWER EXPRESSWAY)
SECTION 2015-020B
COOK COUNTY
STATION 1315+57.01 TO STATION 1318+74.91
STRUCTURE NO. 016-1827

TranSystems

USER NAME = wjcolletti	DESIGNED - WJC	REVISED -	
	CHECKED - MDS	REVISED -	
PLOT SCALE = 0.17 ' / in.	DRAWN - WJC	REVISED -	
PLOT DATE = 11/29/2018	CHECKED - MDS	REVISED -	

STATE OF ILLINOIS
DEPARTMENT OF TRANSPORTATION

SHEET NO. 3 OF 3 SHEETS

F.A.I. RTE.	SECTION	COUNTY	TOTAL SHEETS	SHEET NO.
290	2015-020B	COOK	3	3
		CONTRACT NO. 62A78		
	ILLINOIS FED. AID PROJECT			

9:41:09 AM - pw:\\617479-PWINT.aecomonline.local:AECOM_DS02_MA\Documents\01Americas\Transportation\60269938 Circle\Phase_II\000_CAD\008_Structural\Structure_016-1827\TSL\Sheets\061827-62A78-SHT-TSL-003