Bench Mark: Chain Bolt on hydrant on NW corner of Nordica and Bryn Mawr Ave.
Existing Structure: Existing structure is a T-type cast-in-place retaining wall on spread footing, constructed in 1958 (No Structure Number assigned). Wall is approximately 538 feet long with a max. exposed height of 15'-7". A chain link fence and light poles are mounted on top of the wall. Existing wall will be removed as part of this reconstruction.
Traffic to be maintained using Ramp closure and detour.
Salvage - None

DESIGN SPECIFICATIONS

AASHTO LRFD Bridge Design Specifications, 7th Edition (2014) with 2015 Interim Revisions

LOADING

Allow 35 psf wind load for Structure Mounted Noise Wall (see Special Provision)
Maximum Dead Load not to exceed 55 psf of wall face area.
Traffic Impact per AASHTO LRFD Bridge Specifications

DESIGN STRESSES

(Field Units)
f'c = 3,500 psi
fy = 60,000 psi (Reinforcement)
fy = 50,000 psi (M270 Grade 50)

HIGHWAY CLASSIFICATION

F.A.I Rte. - I-90
Functional Class: Interstate
ADT: 192,100 (2011); 243,000 (2040)
ADTT: 6,900 (2011); 8,700 (2040)
DHV: 6180 (One-way)
Speed: 55 m.p.h (posted); 60 m.p.h (design)

APPROVED
MAR 28 2016
AS A BASIS FOR PREPARATION OF DETAILED PLANS

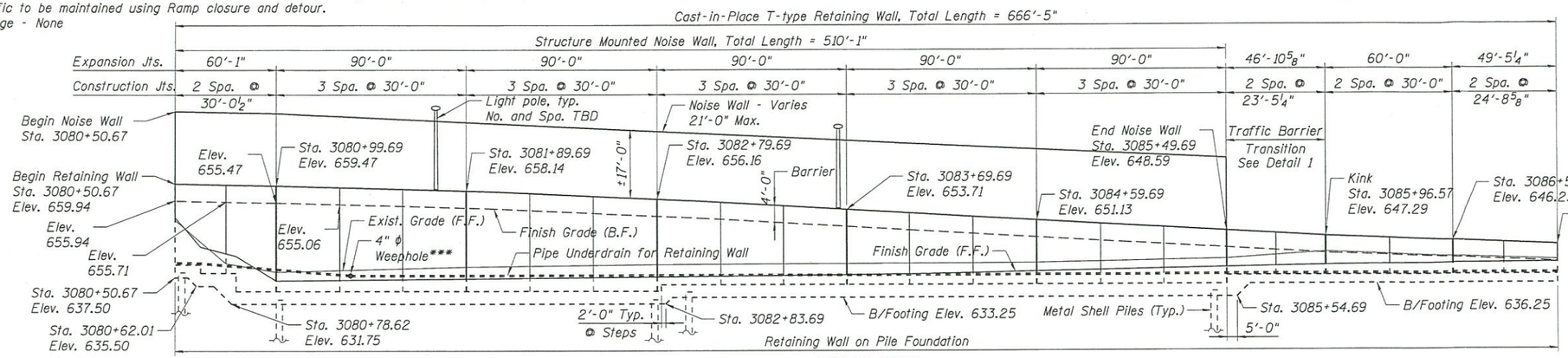

ELEVATION

(Dimension measured along front face of wall)
(Looking @ F.F. - Side Facing I-90)

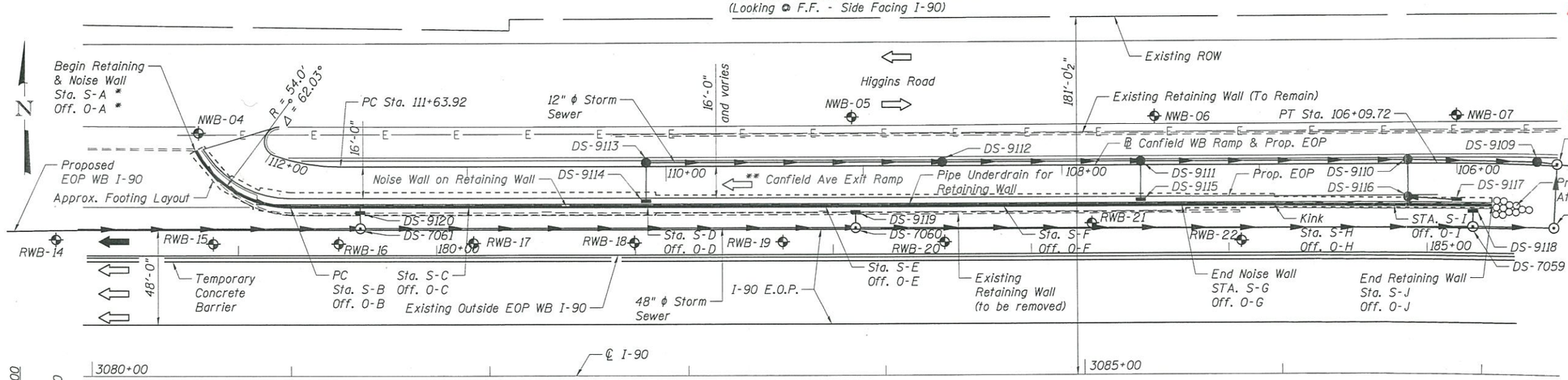

PLAN

Notes:

- * Stations and Offsets for Control Points are provided on Sht. 2. Stations and Offsets are provided at front face of the retaining wall. S-A indicates Station at Point A and O-A indicates Offset at Point A, typ.
- ** Traffic will be maintained using Ramp closure and detour.
- *** Weephole to be located minimum 6" above the nearest inlet in front of the retaining wall.

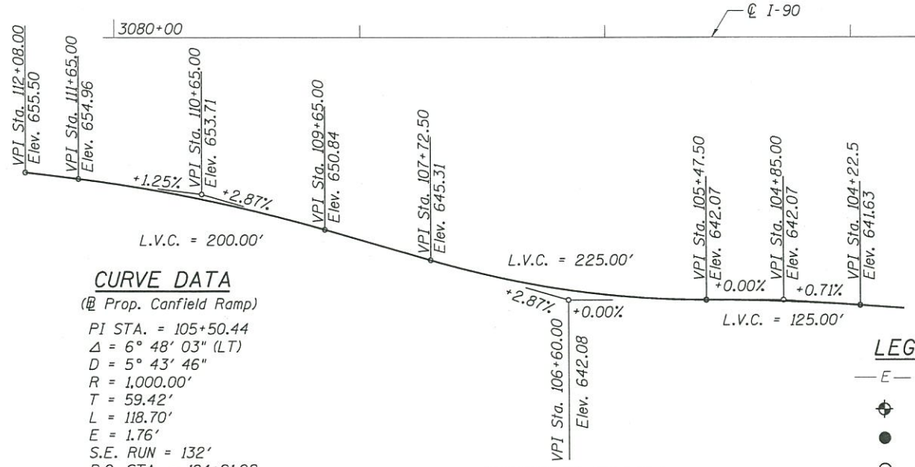

CURVE DATA

(℄ Prop. Canfield Ramp)

PI STA. = 105+50.44
Δ = 6° 48' 03" (LT)
D = 5° 43' 46"
R = 1,000.00'
T = 59.42'
L = 118.70'
E = 1.76'
S.E. RUN = 132'
P.C. STA. = 104+91.02
P.T. STA. = 106+09.72

PROFILE GRADE

(℄ Prop. Canfield WB Ramp)

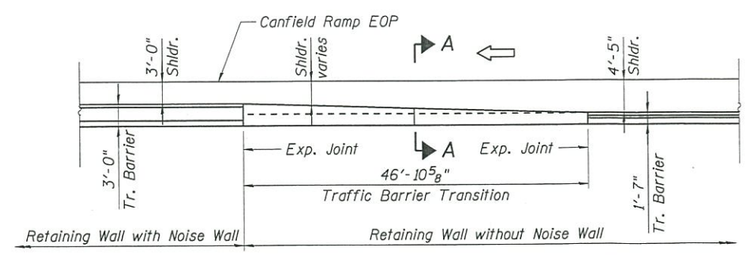

DETAIL 1 - TR. BARRIER TRANSITION PLAN VIEW

LEGEND

- —E— Exist. Underground Electric
- Boring Location
- Proposed Catch Basin
- Proposed Man Hole
- Proposed Inlet
- Proposed Storm Sewer
- Proposed Pipe Underdrain
- Proposed Traffic Lane
- Existing Traffic Lane

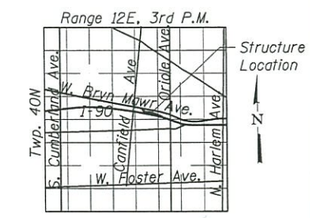

LOCATION SKETCH

GENERAL PLAN
INTERSTATE I-90
F.A.P. RTE. I-90 - SECTION (1517 & 1415) R-2
COOK COUNTY
STATION 3080+51.99 TO 3087+04.11
STRUCTURE NO. 016-2289

exp U.S. Services Inc. Chicago, IL BUILDINGS-EARTH & ENVIRONMENT-ENERGY INDUSTRIAL-INFRASTRUCTURE-SUSTAINABILITY	USER NAME = dhatkers	DESIGNED KK	REVISED	STATE OF ILLINOIS DEPARTMENT OF TRANSPORTATION	GENERAL PLAN CANFIELD EXIT RAMP (C) RETAINING /NOISE WALL	F.A.I RTE.	SECTION	COUNTY	TOTAL SHEETS / SHEET NO.
		CHECKED VCP	REVISED			I-90		COOK	1
	PLOT SCALE = 0.08 ' / in.	DRAWN KK	REVISED						
	PLOT DATE = 8/11/2015	DATE 02/20/2015	REVISED		SHEET NO. 1 OF 2 SHEETS		ILLINOIS	FED. AID PROJECT	

FILE NAME = pw:\\hntbw356.hntb.org:PWGreat_Lakes\Documents\Chicago Projects\58015 I-90\Phase II\Contract 3 - Westbound\Design\CADD\CADD Sheets\D158015-sht-PRWB3_TSL01_GeneralPlan-Elevation.dgn

* Subject to refinement during final design.
** Type, size and spacing of posts, noise wall panels and all connections to be determined by Contractor.
*** Backfill remainder of structure excavation and over excavation with same material specified for roadway embankment.

Construction Sequence:

1. Excavate at 1:1 slope behind the existing retaining wall along I-90.
2. Install temporary concrete barrier along WB I-90.
3. Remove existing retaining wall along I-90.
4. Drive metal shell piles for the proposed retaining wall.
5. Install 48" dia. storm sewer and manhole, use trench boxes for excavation if required.
6. Construct new retaining wall.
7. Install 12" dia. storm sewer and Manhole/Inlets in coordination with backfill behind the new retaining wall. Use trench boxes for excavation if required.
8. Construct traffic barrier and noise wall on top of the new retaining wall.
9. Construct Canfield ramp pavement and I-90 outer lane pavement and shoulder.

Notes:

(1) 3.0% and varies
(2) 4.0% and varies
(3) 3.0% and varies
(4) The noise wall shall have an "Ashlar Stone" pattern on both faces of the wall for the entire length of the noise wall.
(5) Varies, 3'-0" Min.

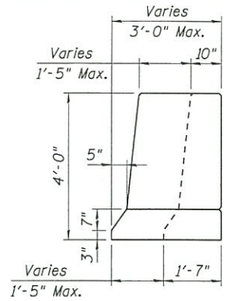

SECTION A-A

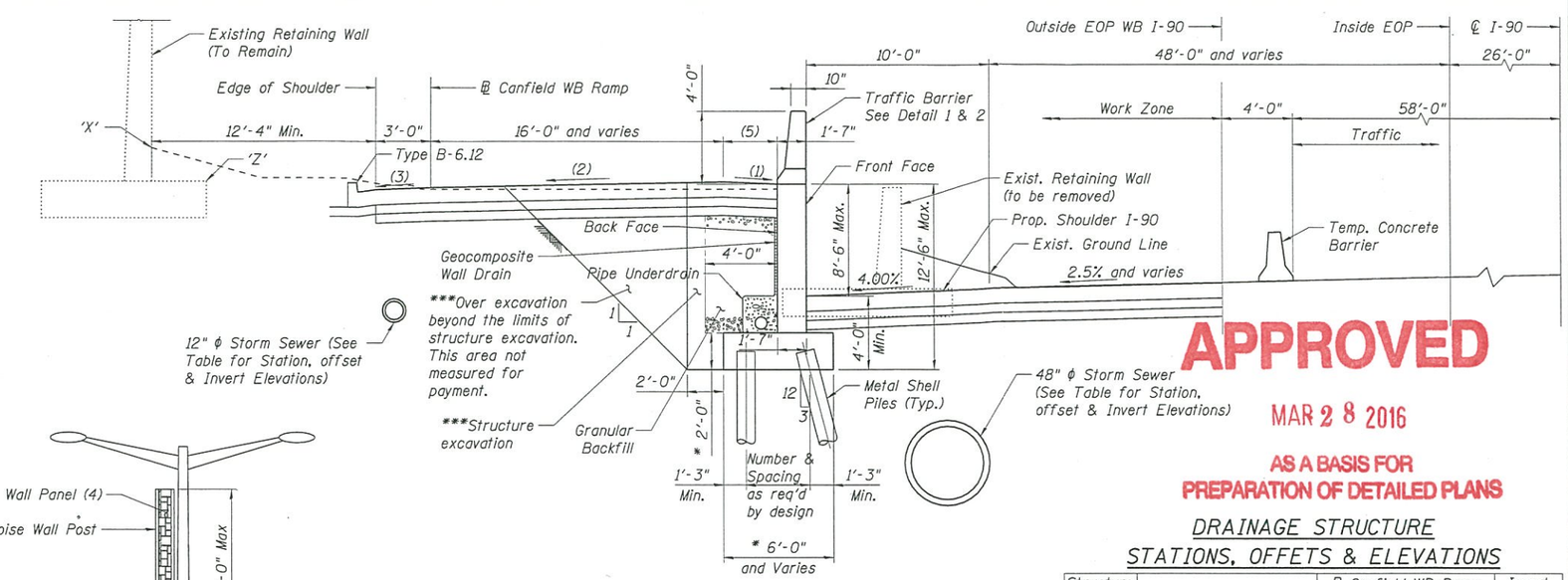

WALL SECTION WITHOUT NOISEWALL
(Sta. 3085+49.69 to Sta. 3087+04.11)

APPROVED
MAR 28 2016
AS A BASIS FOR PREPARATION OF DETAILED PLANS

DRAINAGE STRUCTURE STATIONS, OFFETS & ELEVATIONS

Structure Name	Description	℄ Canfield WB Ramp		Invert Elevation
		Station (S)	Offset (O)	
DS-9109	CB TA 4 DIA T20F&G	105+60	1.6	636.76
DS-9110	CB TA 4 DIA T23F&G	106+25	2	636.85
DS-9111	CB TA 4 DIA T23F&G	107+60	2	638.33
DS-9112	CB TA 4 DIA T23F&G	108+60	2	640.98
DS-9113	CB TA 4 DIA T23F&G	110+10	2	643.48
DS-9114	INLETS TA T20F&G	110+10	-17.5	647.5
DS-9115	INLETS TA T20F&G	107+60	-17.5	640.46
DS-9116	CB TA 4 DIA T20F&G	106+25	-16.88	637.46
DS-9117	INLETS TA T20F&G	106+00	-18.3	637.61
DS-7057	MAN TA 6 DIA T1F CL	105+50	-0.15	625.14
		℄ I-90		
		Station (S)	Offset (O)	
DS-9118	INLETS TA T20F&G	3086+95	-82.75	639.4
DS-9119	INLETS TA T20F&G	3083+85	-82.75	639.59
DS-9120	INLETS TA T20F&G	3081+35	-82.75	640.6
DS-7058	MAN TA 8 DIA T1F CL	3087+35	-74.75	625.4
DS-7059	MAN TA 8 DIA T1F CL	3086+95	-74.75	625.45
DS-7060	MAN TA 6 DIA T1F CL	3083+85	-74.75	625.5
DS-7061	MAN TA 6 DIA T1F CL	3081+35	-74.75	625.83

DS = Drainage Structure

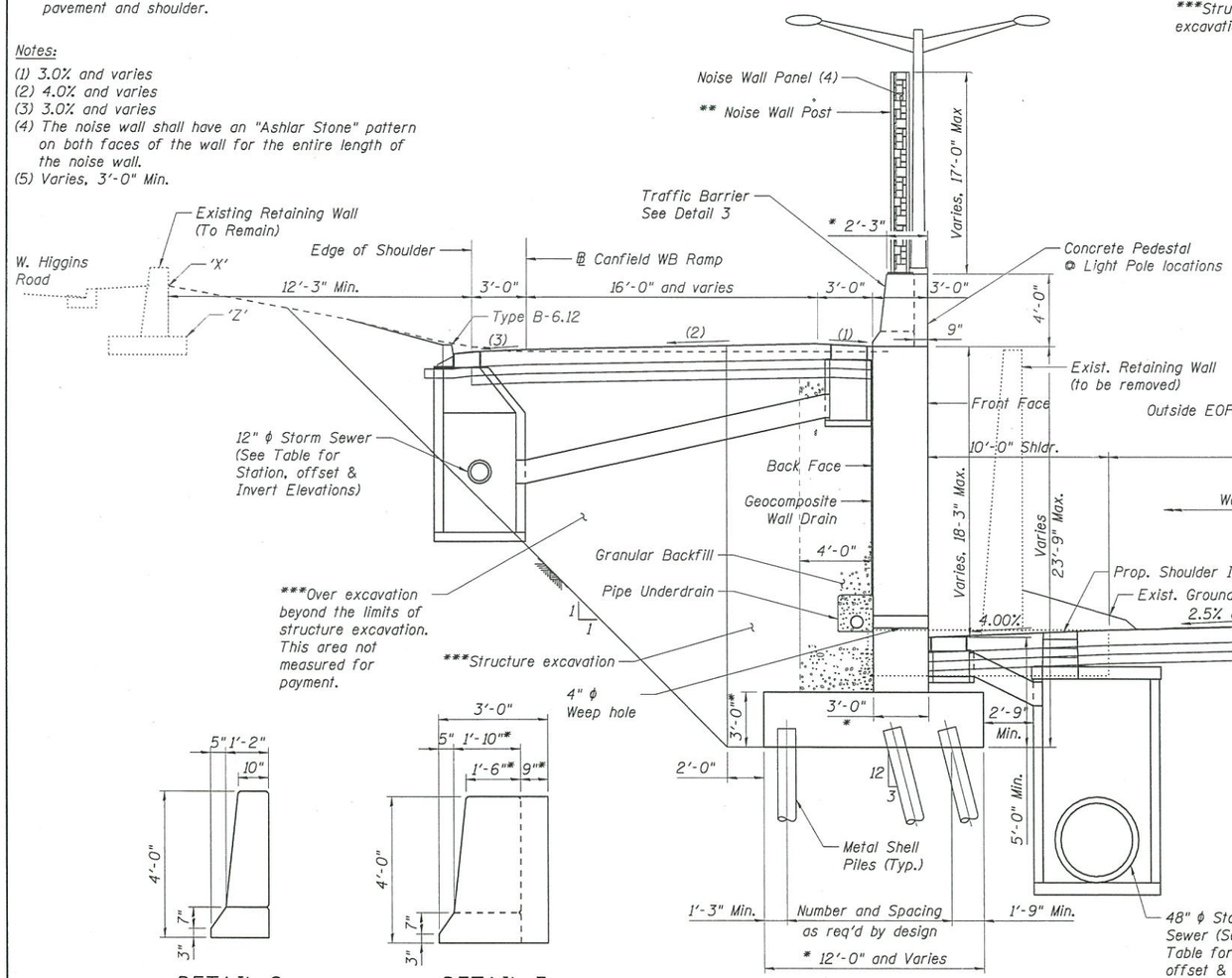

DETAIL 2

DETAIL 3
(Traffic Barrier with Concrete Pedestal)

WALL SECTION WITH NOISEWALL
(Sta. 3080+50.67 to Sta. 3085+49.69)

CONTROL POINT STATIONS & OFFSETS

Location	℄ I-90		℄ Canfield WB Ramp	
	Station (S)	Offset (O)	Station (S)	Offset (O)
A	3080+50.67	113.47'	112+06.37	36.18
B	3080+99.69	84.0	111+84.38	24.60
C	3081+89.69	84.0	110+99.23	22.0
D	3082+79.69	84.0	110+09.23	22.0
E	3083+69.69	84.0	109+19.23	22.0
F	3084+59.69	84.0	108+29.23	22.0
G	3085+49.69	84.0	107+39.23	22.0
H	3085+96.57	84.0	106+92.35	22.0
I	3086+55.53	83.70	106+32.37	22.67
J	3087+04.11	84.0	105+82.30	22.86

STATIONS, OFFSETS AND ELEVATIONS
(Grade at front face and top of footing for existing W. Higgins Road retaining wall)

	'X' - Grade @ Front		'Z' - T/Footing Elevation	
Station	Offset	Elevation	Offset	Elevation
110+27.35	17.50	654.04	16.50	651.25
109+97.35	15.46	653.07	14.21	650.25
109+67.35	15.37	652.18	13.62	648.50
109+07.35	15.26	650.87	13.01	646.75
108+47.35	15.43	649.48	12.80	645.50
107+87.35	15.41	648.17	12.45	643.75
107+27.35	15.33	646.75	12.37	643.75
106+67.35	15.33	645.58	12.38	643.75
106+07.38	15.30	646.26	12.34	644.25
105+48.38	15.26	647.83	12.30	645.50