Benchmark: BM-92 Chiseled square on sidewalk at S.W. corner of S.N. 016-0362, Elev. 635.39.

Existing Structure: None.

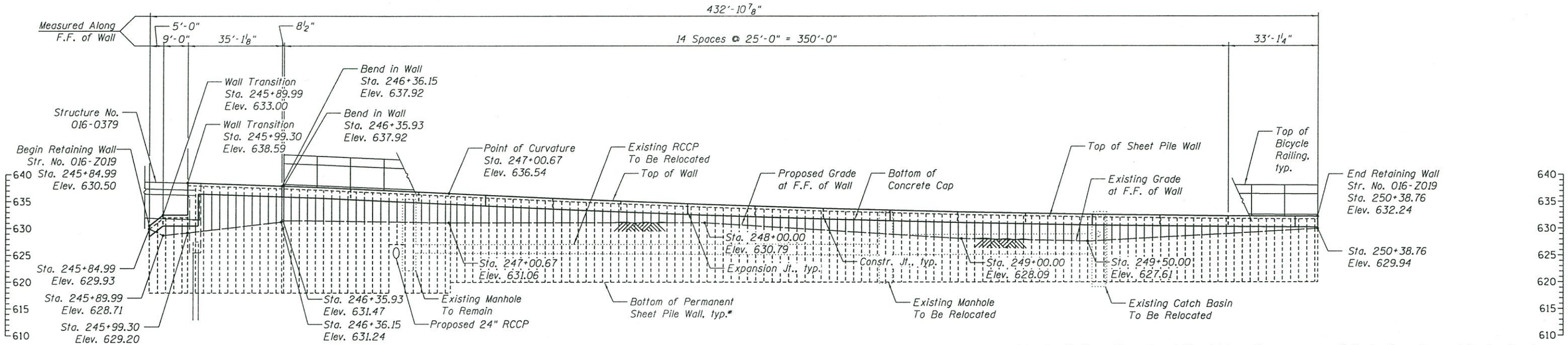

UNFOLDED ELEVATION

(Looking North at Front Face of Wall)

Note: See Drainage Plans for additional information.

* Sheet pile section and tip elevation, to be determined during final design.

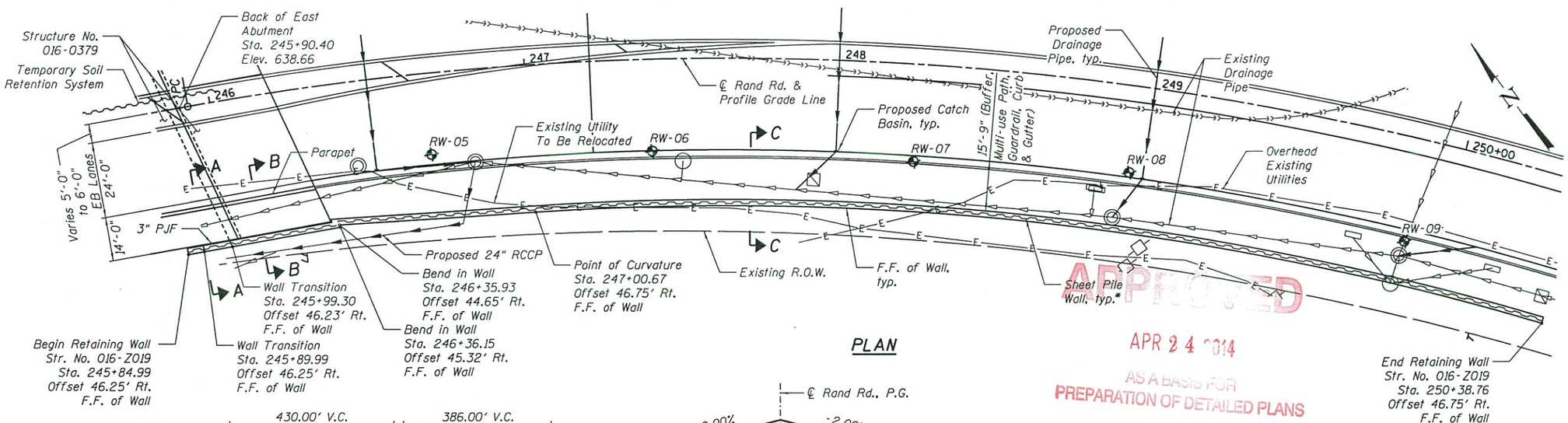

PLAN

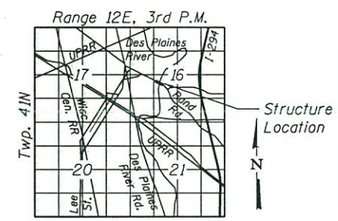

LOCATION SKETCH

LEGEND

Soil Boring

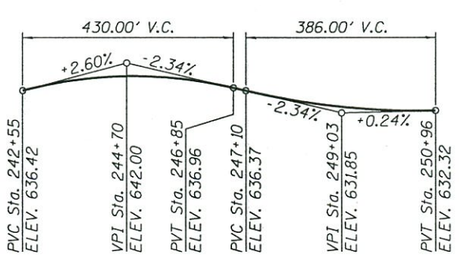

PROFILE GRADE

(Along ℄ Rand Rd.)

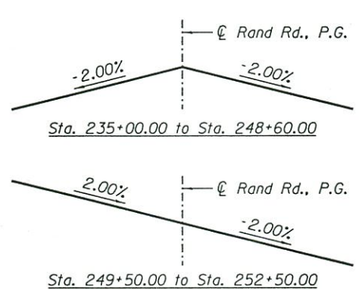

SUPERELEVATION TRANSITION

RAND ROAD

(Looking Upstation)

CURVE DATA

(℄ of Rand Rd.)

P.I. Sta. = 249+67.15
Δ = 42° 59' 15" (RT)
D = 6° 01' 52"
R = 950.00'
T = 374.10'
L = 712.76'
E = 71.00'
P.C. Sta. = 245+93.06
P.T. Sta. = 253+05.82

HIGHWAY CLASSIFICATION

Rte. FAU 3523 (Rand Road)
Functional Class: Minor Arterial
ADT: 27,400 (2010); 29,000 (2030)
DHV: 1,525 (2030)
ADTT: 2.2%
Design Speed: 40 m.p.h.
Posted Speed: 40 m.p.h.
Two-Way Traffic
Directional Distribution: 50/50

DESIGN SPECIFICATIONS

2012 AASHTO LRFD Bridge Design Specifications, 6th Edition

DESIGN STRESSES

FIELD UNITS

f'c = 3,500 psi
fy = 60,000 psi (Reinforcement)
fy = 50,000 psi (Sheet Pile)

APPROVED
APR 24 2014
AS A BASIS FOR PREPARATION OF DETAILED PLANS

GENERAL PLAN
RAND ROAD
RTE. FAU 3523 - SEC. 120Y-B
COOK COUNTY
STATION 245+84.99 TO 250+38.76
STRUCTURE NO. 016-Z019

RS&H

USER NAME = lait	DESIGNED - TLR	07-30-2013	REVISED - TLR	12-16-2013	STATE OF ILLINOIS DEPARTMENT OF TRANSPORTATION
PLOT DATE = 4/23/2014	CHECKED - LM	07-31-2013	REVISED		GENERAL PLAN STRUCTURE NO. 016-Z019
	DRAWN - TLR	07-31-2013	REVISED		SHEET NO. 1 OF 2 SHEETS
	CHECKED - LM	07-31-2013	REVISED		

F.A.U. RTE.	SECTION	COUNTY	TOTAL SHEETS	SHEET NO.
3523	120Y-B	COOK	173	115
		CONTRACT NO. 601J10		
		ILLINOIS FED. AID PROJECT		

FILE NAME = X:\P\113-2839-000 Rand Road\CADD\Sheets\TSL\k016Z019-60J10-TSL-002.dgn

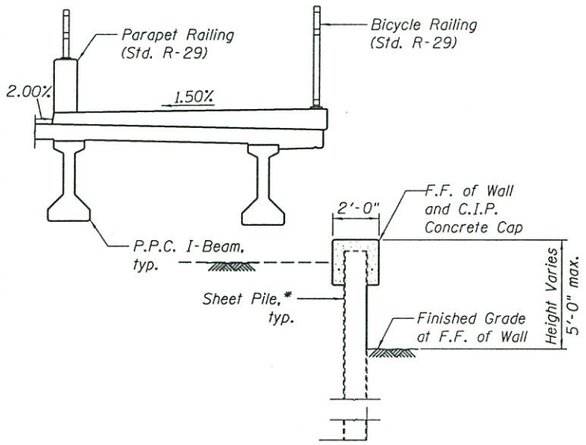

SECTION A-A THRU SHEET PILE WALL

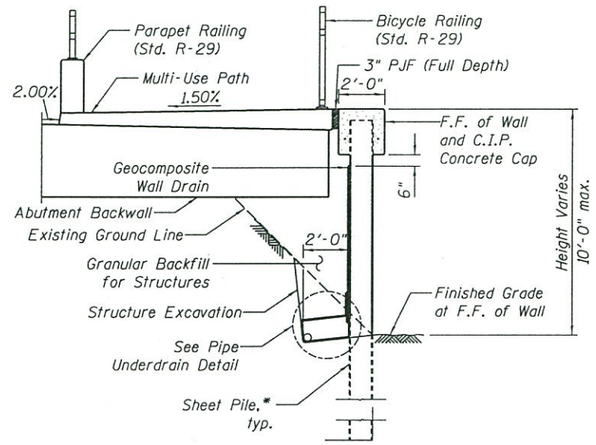

SECTION B-B THRU ABUTMENT

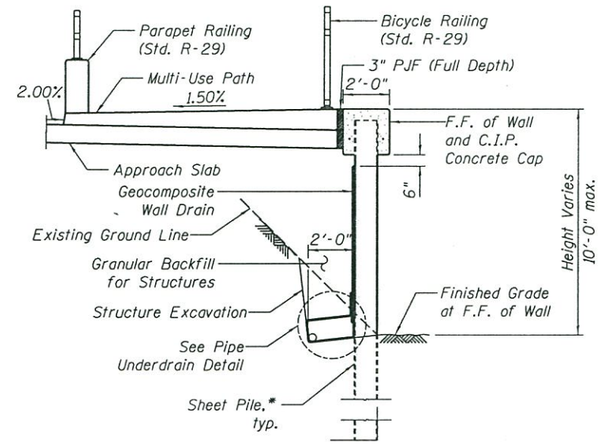

SECTION B-B THRU SHEET PILE WALL

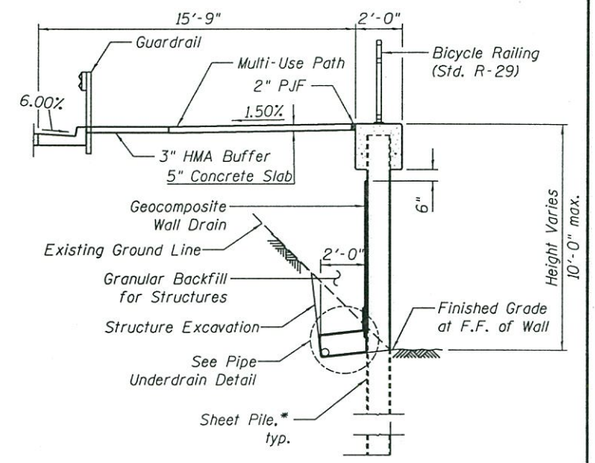

SECTION C-C THRU SHEET PILE WALL

APPROVED

APR 24 2014

AS A BASIS FOR PREPARATION OF DETAILED PLANS

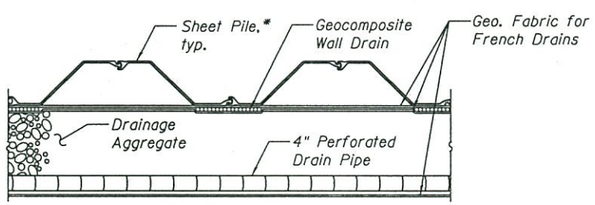

SECTION C-C

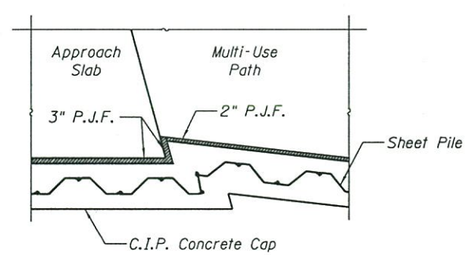

RETAINING WALL/APPROACH SLAB INTERFACE DETAIL

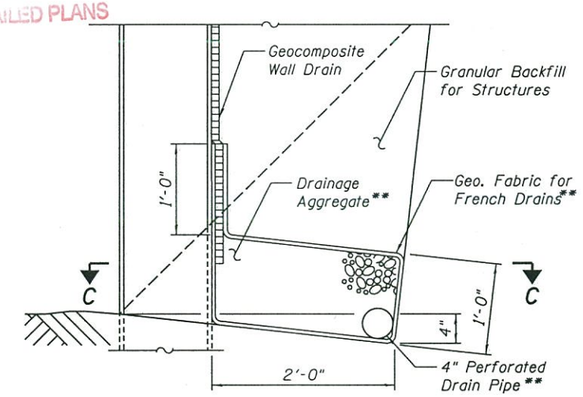

PIPE UNDERDRAIN DETAIL

**Note: Included in the cost of pipe underdrains for structures, 4"

* Sheet pile section and tip elevation to be determined during final design.

Note: At the interface between the approach slab and the retaining walls, a 3" wide by "H", Preformed Joint Filler shall be installed for the entire length of the approach slab and the abutment. The "H" is the vertical dimension required to separate the bridge abutment and approach slab from the retaining wall. This PJF is required due to the horizontal movement of the abutments and approach slabs, relative to the stationary retaining walls.

DETAILS
RAND ROAD
RTE. FAU 3523 - SEC. 120Y-B
COOK COUNTY
STATION 245+85.99 TO 250+38.76
STRUCTURE NO. 016-Z019

FILE NAME = X:\P\113-2838-000 Rand Road\CAD\S\CADD Sheets\TS&Ls\016Z019-60J10-TSL-002.dgn

RS&H	USER NAME = lait	DESIGNED - TLR 07-30-2013	REVISED - TLR 12-16-2013	STATE OF ILLINOIS DEPARTMENT OF TRANSPORTATION	DETAILS STRUCTURE NO. 016-Z019	F.A.U. RTE. 3523	SECTION 120Y-B	COUNTY COOK	TOTAL SHEETS 173	SHEET NO. 115A
	PLOT DATE = 4/23/2014	CHECKED - LM 07-31-2013	REVISED - TLR 03-28-2014					CONTRACT NO. 601J10		
		DRAWN - TLR 07-31-2013	REVISED							
		CHECKED - LM 07-31-2013	REVISED		SHEET NO. 2 OF 2 SHEETS			ILLINOIS FED. AID PROJECT		