Benchmark: R.R. spike in South face of North power pole east of S.N. 029-1000, Sta. 15+64.50, 25.6' Lt., Elev. 637.933.

Existing Structure: S.N. 029-1000 was built in 1924 under S.B.I. Rte. 41, Section 11. The existing structure is a double 6'x7' barrel culvert with attached L-type wingwalls that are parallel to the roadway. Existing structure to remain in place and filled with flowable fill. Stage construction shall be used during construction.

No Salvage.

Precast alternate is not allowed.

Notes:
Stage construction details, waterway information, and profile grade shown on sheet 2 of 2.
Filter fabric shall be placed at the bottom of the excavation. Rockfill shall be used to backfill the excavation and capped with 6 inches of porous granular embankment (CA7 or CA11).
For Section B-B, see sheet 2 of 2.

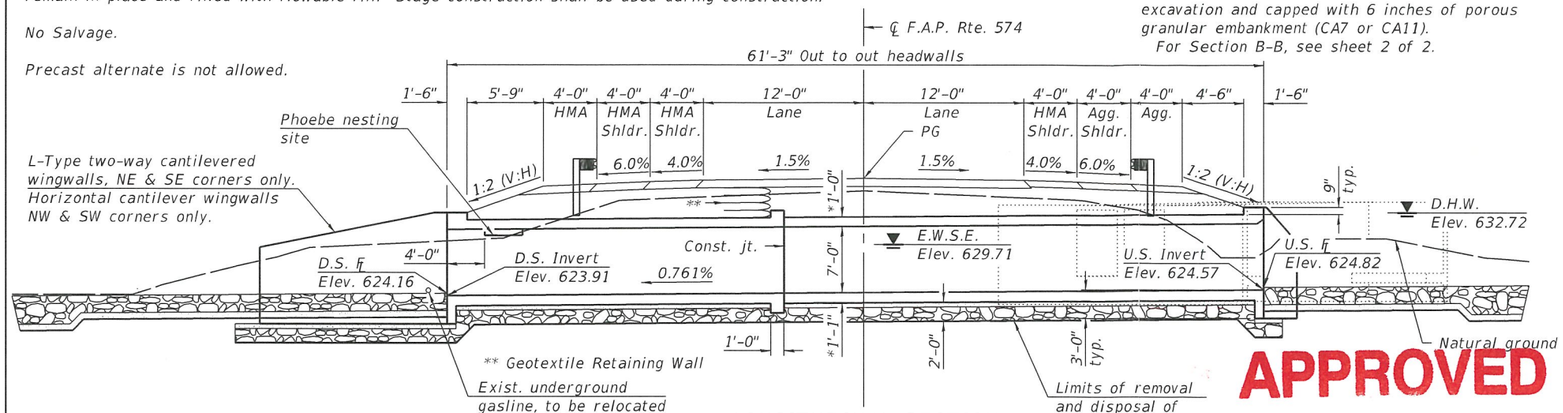

LONGITUDINAL SECTION
(Horiz. dims. at rt. L's to ℄ F.A.P. Rte. 574)

APPROVED
APR 16 2019
AS A BASIS FOR PREPARATION OF DETAILED PLANS

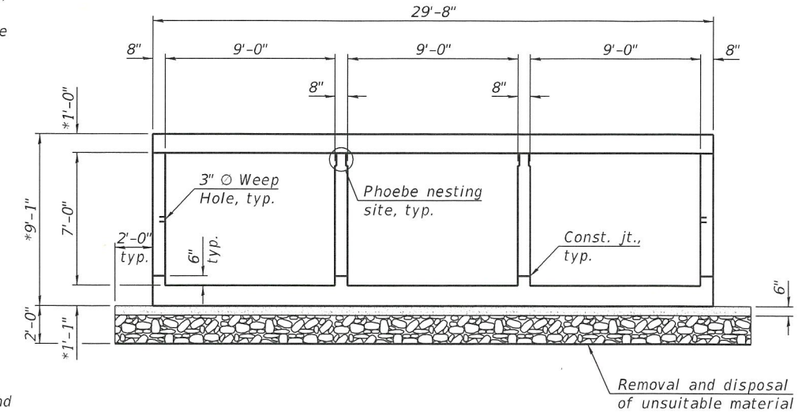

SECTION THRU BARREL
*Slab thickness may be refined in final design.

SECTION A-A

*** 4'-0" HMA Shoulder
4'-0" Aggregate Shoulder

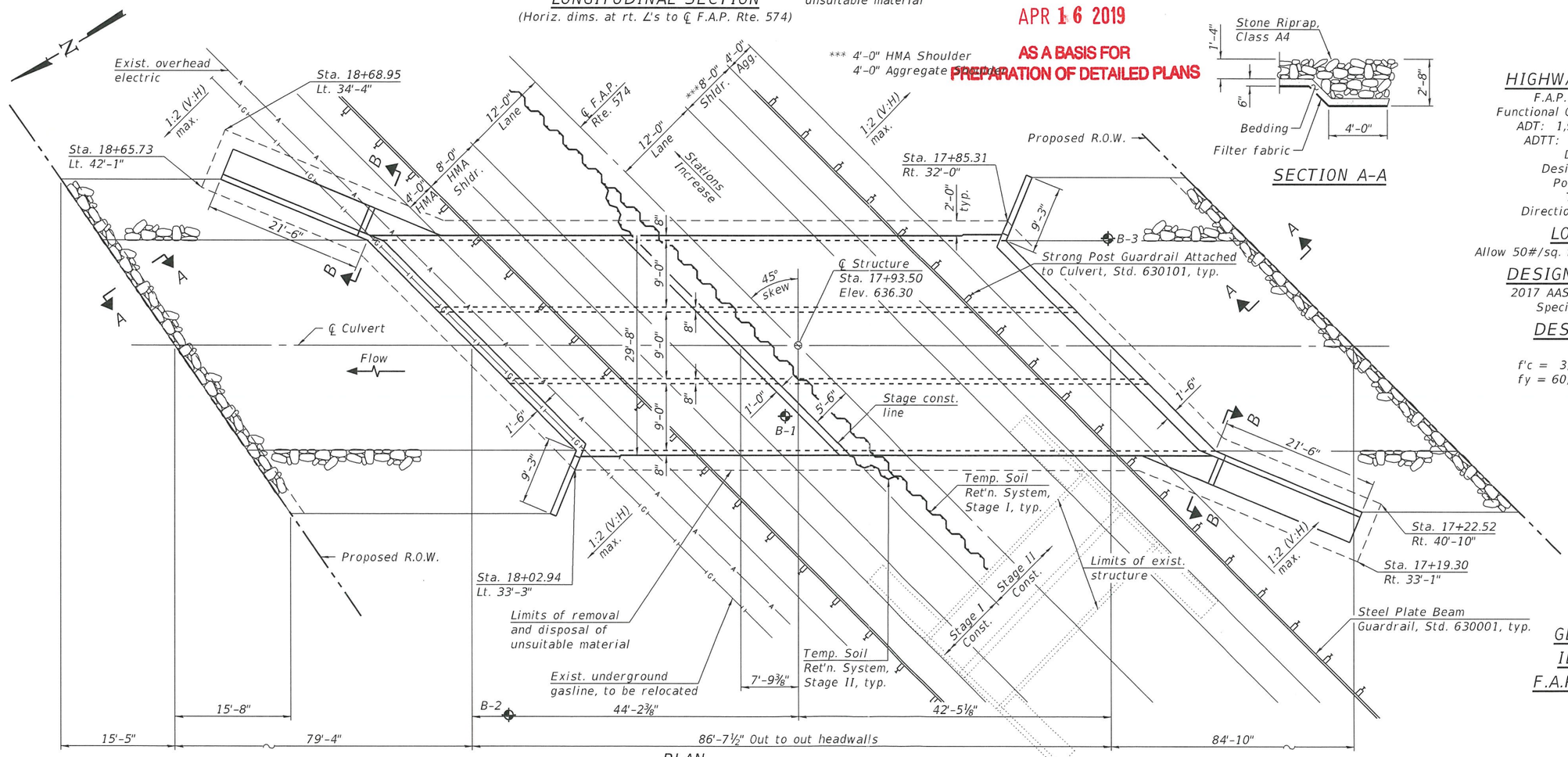

PLAN

HIGHWAY CLASSIFICATION

F.A.P. Rte. 574 - IL Rte. 41
Functional Class: Minor Arterial-Rural
ADT: 1,950 (2015); 2,379 (2035)
ADTT: 370 (2015); 452 (2035)
DHV: 216 (2035)
Design Speed: 55 m.p.h.
Posted Speed: 55 m.p.h.
Two-Way Traffic
Directional Distribution: 50:50

LOADING HL-93

Allow 50#/sq. ft. for future wearing surface.

DESIGN SPECIFICATIONS

2017 AASHTO LRFD Bridge Design Specifications, 8th Edition

DESIGN STRESSES

FIELD UNITS
f'c = 3,500 psi
fy = 60,000 psi (Reinforcement)

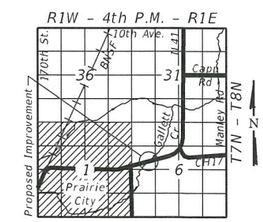

LOCATION SKETCH

GENERAL PLAN & ELEVATION
IL 41 OVER GALLETT CREEK
F.A.P. RTE. 574 - SECTION (12)CR
FULTON COUNTY
17+93.50
STRUCTURE NO. 029-2501

FUHRMANN ENGINEERING	USER NAME =	DESIGNED - E.M. Lagemann	REVISED -	STATE OF ILLINOIS DEPARTMENT OF TRANSPORTATION	
		CHECKED - R.A. Lee	REVISED -		
	PLOT SCALE =	DRAWN - E.M. Lagemann	REVISED -		
	PLOT DATE =	CHECKED - R.A. Lee	REVISED -		SHEET 1 OF 2 SHEETS

F.A.P. RTE.	SECTION	COUNTY	TOTAL SHEETS	SHEET NO.
574	(12)CR	Fulton		
		CONTRACT NO. 68C64		
		ILLINOIS FED. AID PROJECT		

MODEL: Default
FILE NAME: G:\Eljobs_2008\08-324 PTB 149-23 BACON FARMER WORKMAN\WORK ORDER 16 IL 41\CADD\CAD_Sheets\0292501-68C64-TSL-001.dgn
3/25/2019 11:00:01 AM

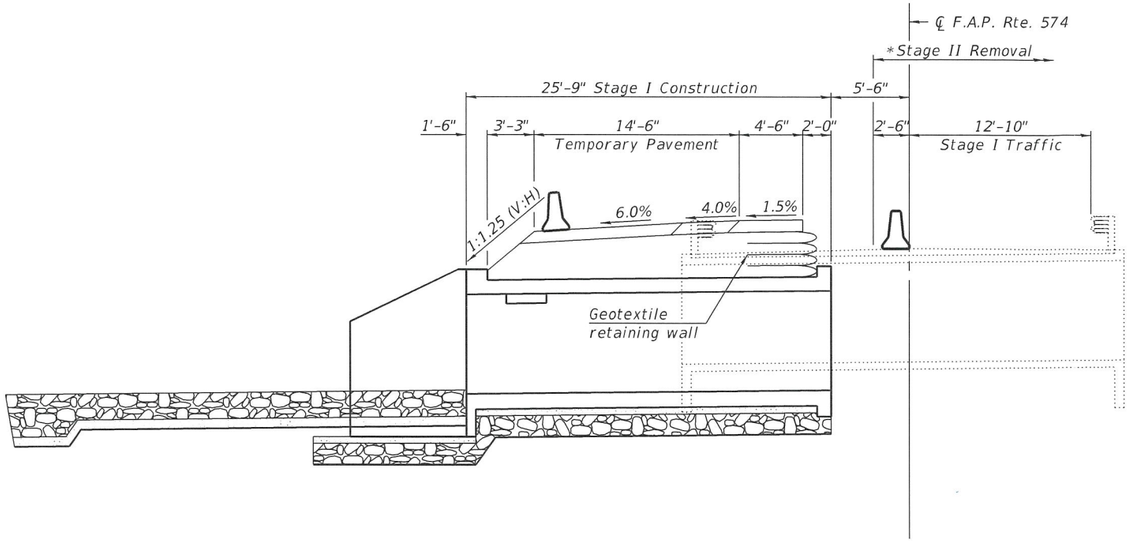

LONGITUDINAL SECTION - STAGE I CONSTRUCTION

*Stage II Removal limited to southeast wingwall.

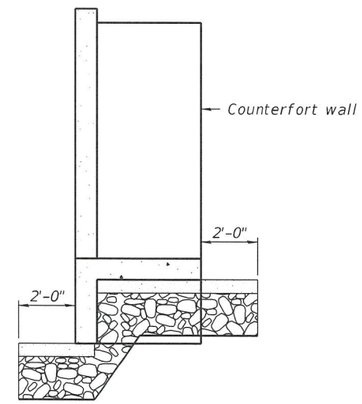

SECTION B-B

WATERWAY INFORMATION

Drainage Area = 1.92 Sq. Mi. Low Grade Elev. 636.30 @ Sta. 16+75 to 18+90									
Flood	Freq. Yr.	Q C.F.S.	Opening Ft²		Nat. H.W.E.	Head - Ft.		Headwater El.	
			Exist.	Prop.		Exist.	Prop.	Exist.	Prop.
	10	517	68	189	632.0	1.4	0.0	633.4	632.0
Design	50	819	77	189	632.8	2.3	0.4	635.1	633.2
Base	100	958	80	189	633.0	2.3	0.6	635.3	633.6
Existing Overtopping	25	688	74	N/A	632.5	2.2	N/A	634.7	N/A
Proposed Overtopping	N/A	N/A	N/A	N/A	N/A	N/A	N/A	N/A	N/A
Max. Calc.	500	1,290	84	189	633.5	2.1	1.1	635.6	634.6

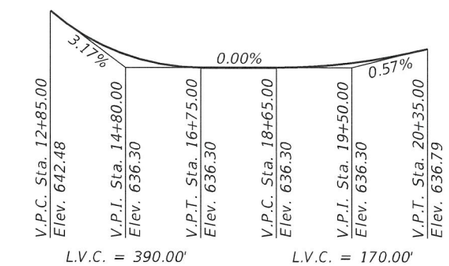

PROFILE GRADE
(Along CL F.A.P. Rte. 574)

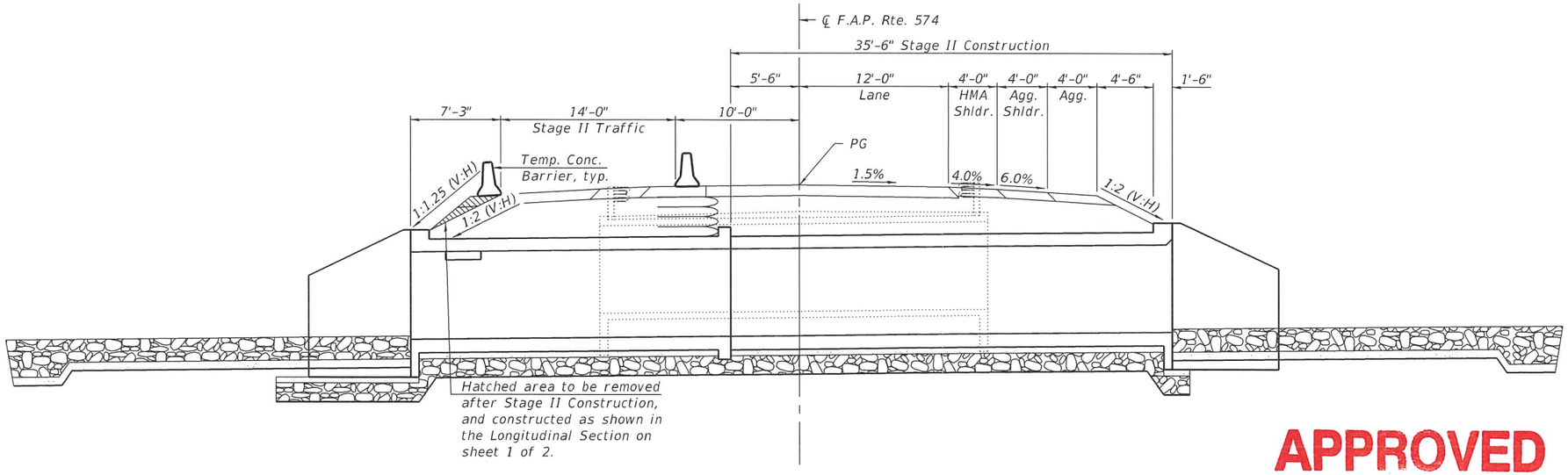

LONGITUDINAL SECTION - STAGE II CONSTRUCTION

Notes:
Horizontal dimensions on Longitudinal Sections are perpendicular to ℄ Roadway.
Temporary pipes shall be placed in the north end of the existing structure to provide drainage during Stage II Construction. Contractor to determine water diversion location. Once new structure has been completed, the temporary pipes and existing structure cells are to be filled with flowable fill, see Roadway plans.
For location of Section B-B, see sheet 1 of 2.

APPROVED
APR 16 2019
AS A BASIS FOR
PREPARATION OF DETAILED PLANS

DETAILS
IL 41 OVER GALLETT CREEK
F.A.P. RTE. 574 - SECTION (12)CR
FULTON COUNTY
17+93.50
STRUCTURE NO. 029-2501

MODEL: Default
FILE NAME: G:\FEIjobs_2008\08-324 PTB 149-23 BACON FARMER WORKMAN\WORK ORDER 16 IL 41\CADD\CAD_Sheets\0292501-68C64-TSL-002.dgn
3/25/2019 11:00:52 AM

FUHRMANN ENGINEERING

USER NAME =	DESIGNED - E.M. Lagemann	REVISED -	
	CHECKED - R.A. Lee	REVISED -	
PLOT SCALE =	DRAWN - E.M. Lagemann	REVISED -	
PLOT DATE =	CHECKED - R.A. Lee	REVISED -	

STATE OF ILLINOIS
DEPARTMENT OF TRANSPORTATION

SHEET 2 OF 2 SHEETS

F.A.P. RTE.	SECTION	COUNTY	TOTAL SHEETS	SHEET NO.
574	(12)CR	Fulton		

CONTRACT NO. 68C64
ILLINOIS | FED. AID PROJECT