Bench Mark: Railroad spike in private property on east side of IL 31 north of Ferson Creek Park entrance. Elev. 701.13

Existing Structure: None.

Traffic to be maintained utilizing stage construction.

Note: This is the overflow structure to the adjacent bridge (SN. 045-0333).

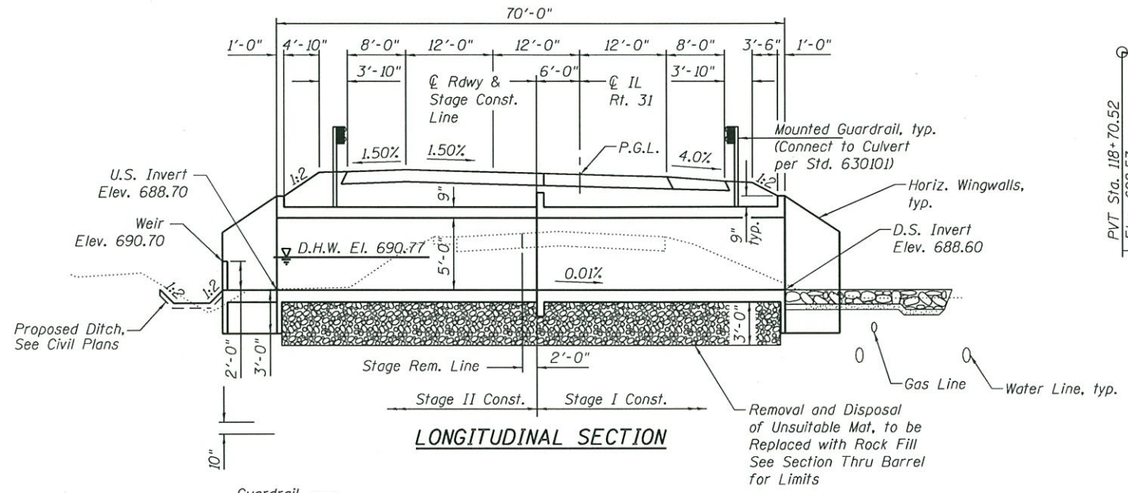

LONGITUDINAL SECTION

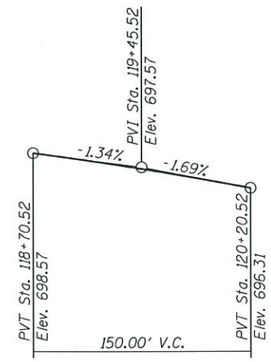

PROFILE GRADE

(Along PGL IL Rte. 31)

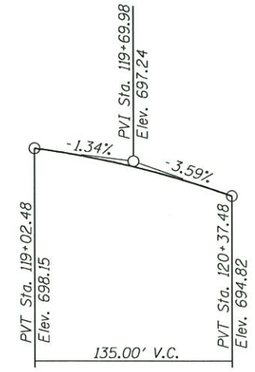

TEMPORARY RAMP PROFILE GRADE

(Along PGL IL Rte. 31)

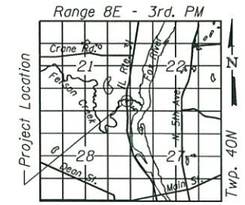

LOCATION SKETCH

HIGHWAY CLASSIFICATION

F.A.U. Rte. 3887 - IL Rte. 31
Functional Class: Minor Arterial (Urban)
ADT: 12,700 (2011); 16,205 (2032)
ADTT: 4.0%
DHV: 1,270
Design Speed: 50 m.p.h.
Posted Speed: 45 m.p.h.
Two-Way Traffic
Directional Distribution: 50:50

DESIGN SPECIFICATIONS

2012 AASHTO LRFD Bridge Design Specifications, 6th Edition, with 2013 Interims

LOADING HL-93

Allow 50#/sq. ft. for future wearing surface.

DESIGN STRESSES

FIELD UNITS

f'c = 3,500 psi
fy = 60,000 psi (Reinforcement)

SEISMIC DATA

Seismic Performance Zone (SPZ) = 1
Design Spectral Acceleration at 1.0 sec. (S_{D1}) = 0.087g
Design Spectral Acceleration at 0.2 sec. (S_{DS}) = 0.157g
Soil Site Class = D

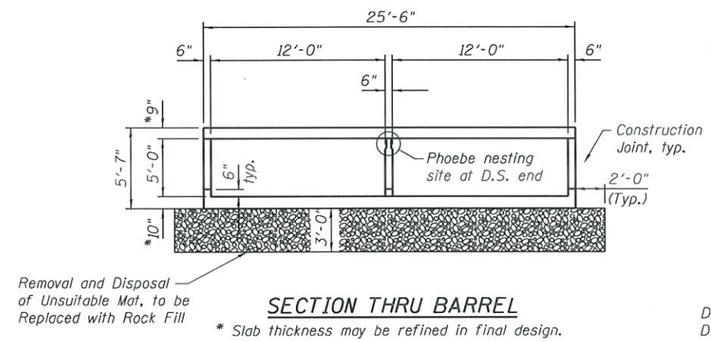

SECTION THRU BARREL

* Slab thickness may be refined in final design.

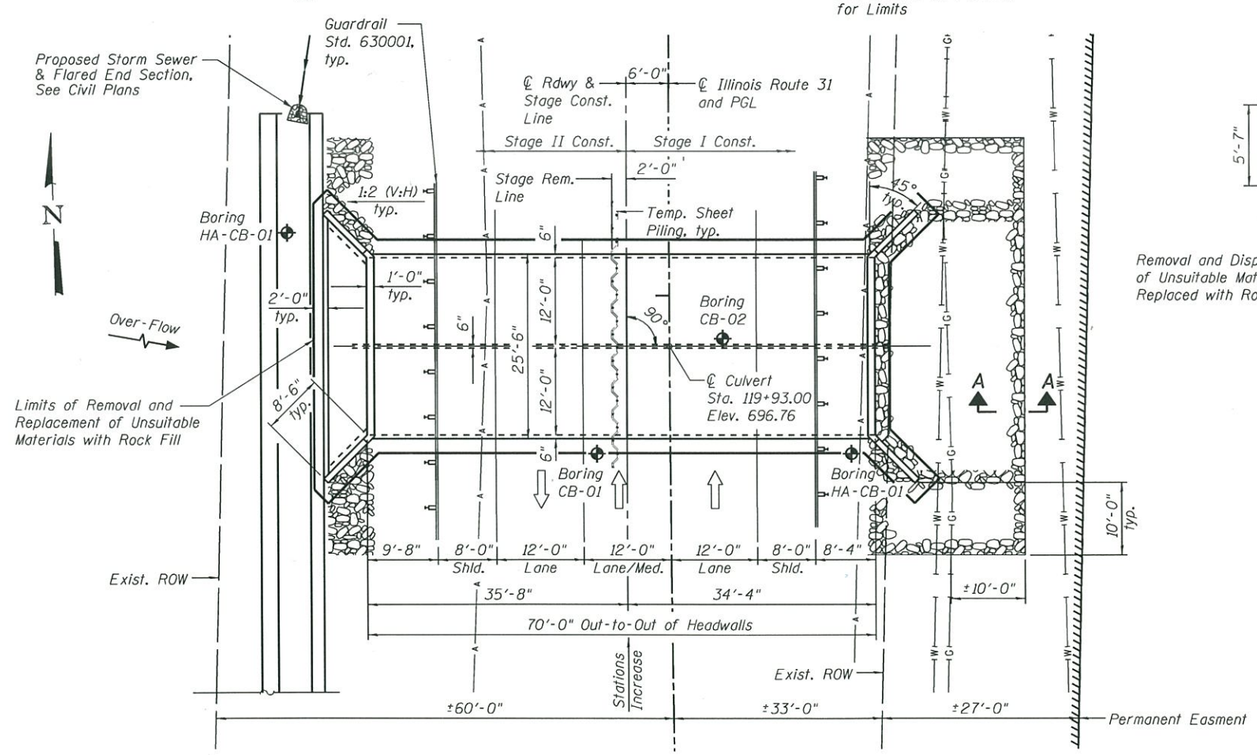

PLAN

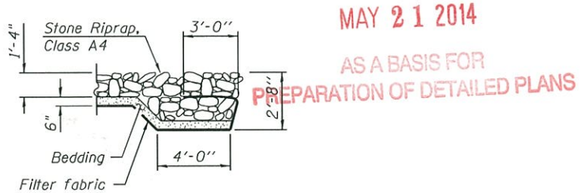

SECTION A-A

APPROVED
MAY 21 2014
AS A BASIS FOR PREPARATION OF DETAILED PLANS

CURVE DATA

P.I. Sta. = 117+87.48
Δ = 4° 30' 07" (RT)
D = 0° 49' 07"
R = 7,000.00'
L = 550.03'
T = 275.16'
E = 5.41'
S.E. = 0.015'/'
P.C. Sta. = 115+12.33
P.T. Sta. = 120+62.36

GENERAL PLAN
IL RTE. 31 OVERFLOW TO FERSON CREEK
F.A.U. RT. 3887 - SEC. I-B-1
KANE COUNTY
STATION 119+93.00
STRUCTURE NO. 045-0334

COLLINS ENGINEERS 123 N. Wacker Dr. Suite 900 Chicago, IL 60606 Tele. (312) 704-9300 Fax (312) 704-9320 www.collinseng.com
ILLINOIS PROFESSIONAL DESIGN FIRM LICENSE NO. 184-000993

USER NAME =	DESIGNED - AMS	REVISED	
	CHECKED - JMS	REVISED	
PLOT SCALE =	DRAWN - DR	REVISED	
PLOT DATE =	CHECKED - AMS	REVISED	

STATE OF ILLINOIS
DEPARTMENT OF TRANSPORTATION

GENERAL PLAN & ELEVATION
STRUCTURE NO. 045-0334
SHEET NO. 1 OF 2 SHEETS

F.A.U. RTE.	SECTION	COUNTY	TOTAL SHEETS	SHEET NO.
3887	I-B-1	KANE	2	1
		CONTRACT NO. 60M81		
		ILLINOIS FED. AID PROJECT		

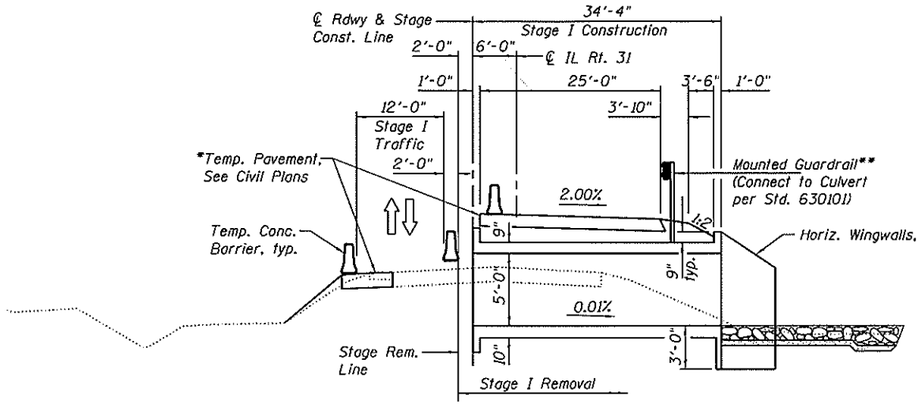

STAGE I
(Looking North)

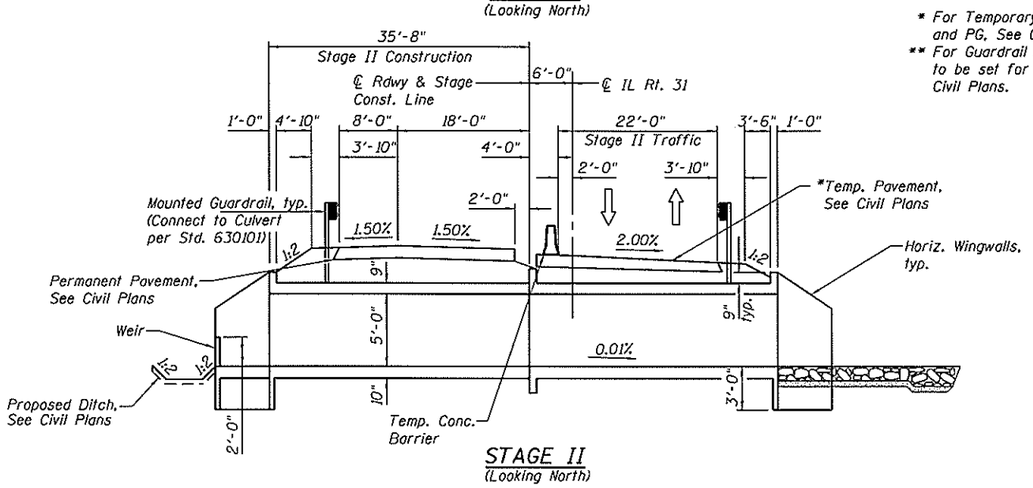

STAGE II
(Looking North)

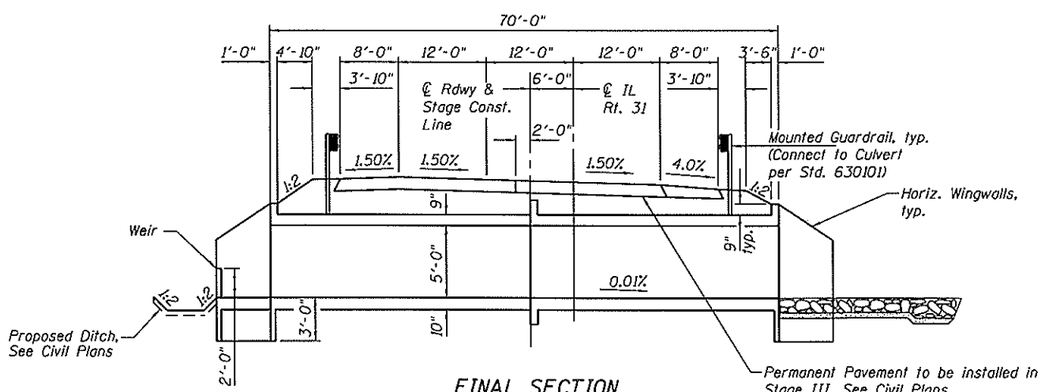

FINAL SECTION
(Looking North)

* For Temporary Pavement cross slope and PG, See Civil Plans.
** For Guardrail mounted in Stage I, height to be set for Permanent Pavement. See Civil Plans.

WATERWAY INFORMATION

Drainage Area = 54.5 Sq. Mi. Proposed Low Grade Elev. 694.9 Ft. @ Sta. 121+50

Flood	Freq. Yr.	Q C.F.S.	Opening Sq. Ft. Exist.	Opening Sq. Ft. Prop.	Nat. H.W.E.	Head - Ft. Exist.	Head - Ft. Prop.	Headwater El. Exist.	Headwater El. Prop.
	10	1959	394	456	689.42	1.42	0.38	690.84	689.80
Design	50	3486	464	593	690.77	1.24	0.49	692.01	691.26
Base	100	4020	485	636	691.19	1.10	0.26	692.29	691.45
Overtopping	200	5020	519		691.81	0.97		692.78	
Max. Calc.	500	6430	567	808	692.68	1.44	0.76	694.12	693.44

10-Year Velocity through Proposed Bridge = 2.2 fps.
2-Year Peak Discharge Rate = 1120 cfs.

DESIGN SCOUR ELEVATION TABLE

Design Scour Elevation (ft)	D.S. Invert	U.S. Invert
	685.60	685.70

SECTIONS
IL RTE. 31 OVERFLOW FERSON CREEK
F.A.U. RT. 3887 - SEC. I-B-1
KANE COUNTY
STATION 119+93.00
STRUCTURE NO. 045-0334

COLLINS ENGINEERS 123 N. Wacker Dr. Suite 800 Chicago, IL 60606 Tel: (312) 704-9200 Fax: (312) 704-9205 www.collinsengr.com
ILLINOIS PROFESSIONAL DESIGN FIRM LICENSE NO 184-000993

USER NAME =	DESIGNED - AMS	REVISED	
	CHECKED - JMS	REVISED	
PLOT SCALE =	DRAWN - DR	REVISED	
PLOT DATE =	CHECKED - AMS	REVISED	

STATE OF ILLINOIS
DEPARTMENT OF TRANSPORTATION

SECTIONS
STRUCTURE NO. 045-0334
SHEET NO. 2 OF 2 SHEETS

F.A.U. RTE.	SECTION	COUNTY	TOTAL SHEETS	SHEET NO.
3887	I-B-1	KANE	2	2
		CONTRACT NO. 60M81		
		ILLINOIS FED. AID PROJECT		