Bench Mark 230: Chiseled "□" cut on north side of east mast arm foundation, north side of U.S. 34 at Game Farm Rd., Sta. 373+81.92, 29.34' Lt., Elev. 619.297.

Existing Structure: None.

Traffic Control: Traffic to be maintained on north side of U.S. 34 during construction.

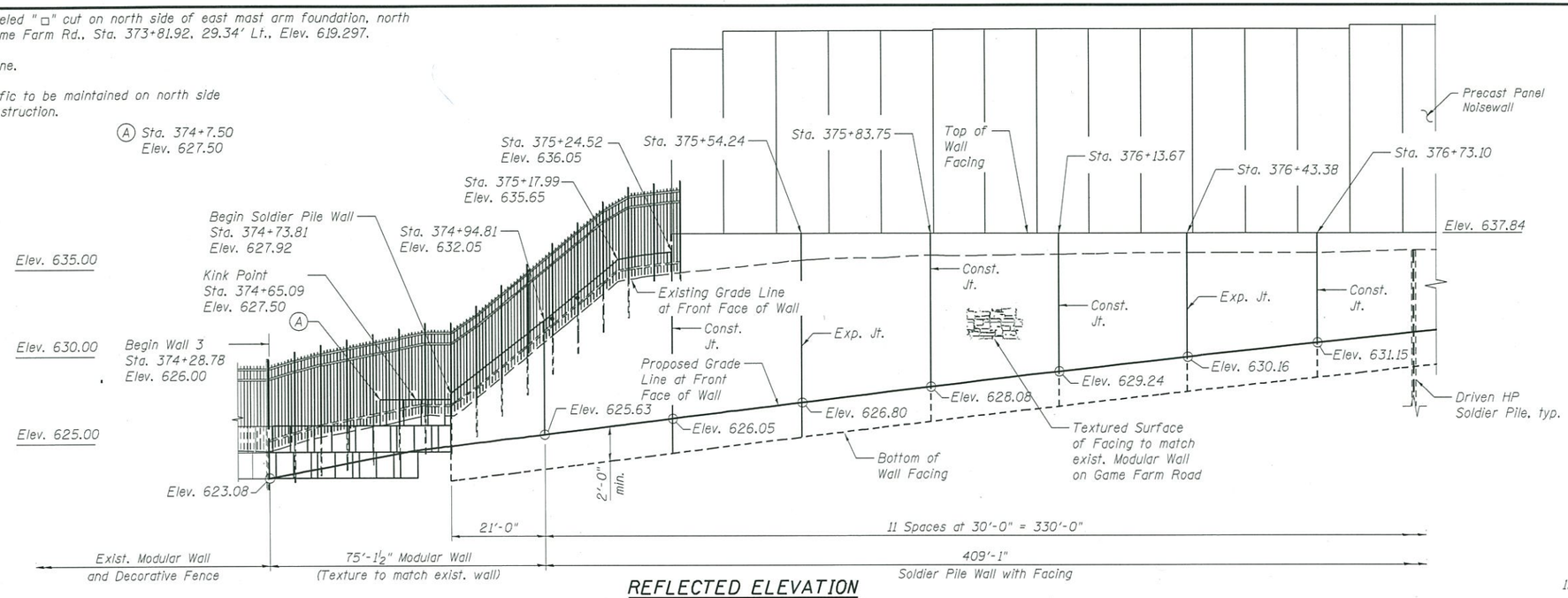

REFLECTED ELEVATION

HIGHWAY CLASSIFICATION

F.A.P. Rte. 591 - U.S. 34
Functional Class: Other Principal Arterial
ADT: 23,000 (2013); 35,000 (2040)
DHV: 3,115 (2040)
ADTT: 8.0%
Design Speed: 45 m.p.h.
Posted Speed: 35 m.p.h.
Two-Way Traffic
Directional Distribution: 50/50

DESIGN SPECIFICATIONS

AASHTO LRFD Bridge Design Specifications, 7th Edition with 2015 Interims

DESIGN STRESSES

FIELD UNITS

f'c = 3,500 psi (Cast-in-Place)
fy = 60,000 psi (Reinforcement)
fy = 50,000 psi (M270 Grade 50) (Soldier Piles & Noisewall Posts)

PRECAST UNITS

f'c = 4,500 psi (Noisewall Precast Panels)
fy = 60,000 psi (Reinforcement)

NOTES:

1. Horizontal dimensions and length measured along Front Face of Modular Wall or Concrete Facing.
2. Stations and offsets are given to Front Face of Modular Wall or Concrete Facing relative to ℄ U.S. 34 & P.G.L.
3. For Detail 1, see Sheet 3.

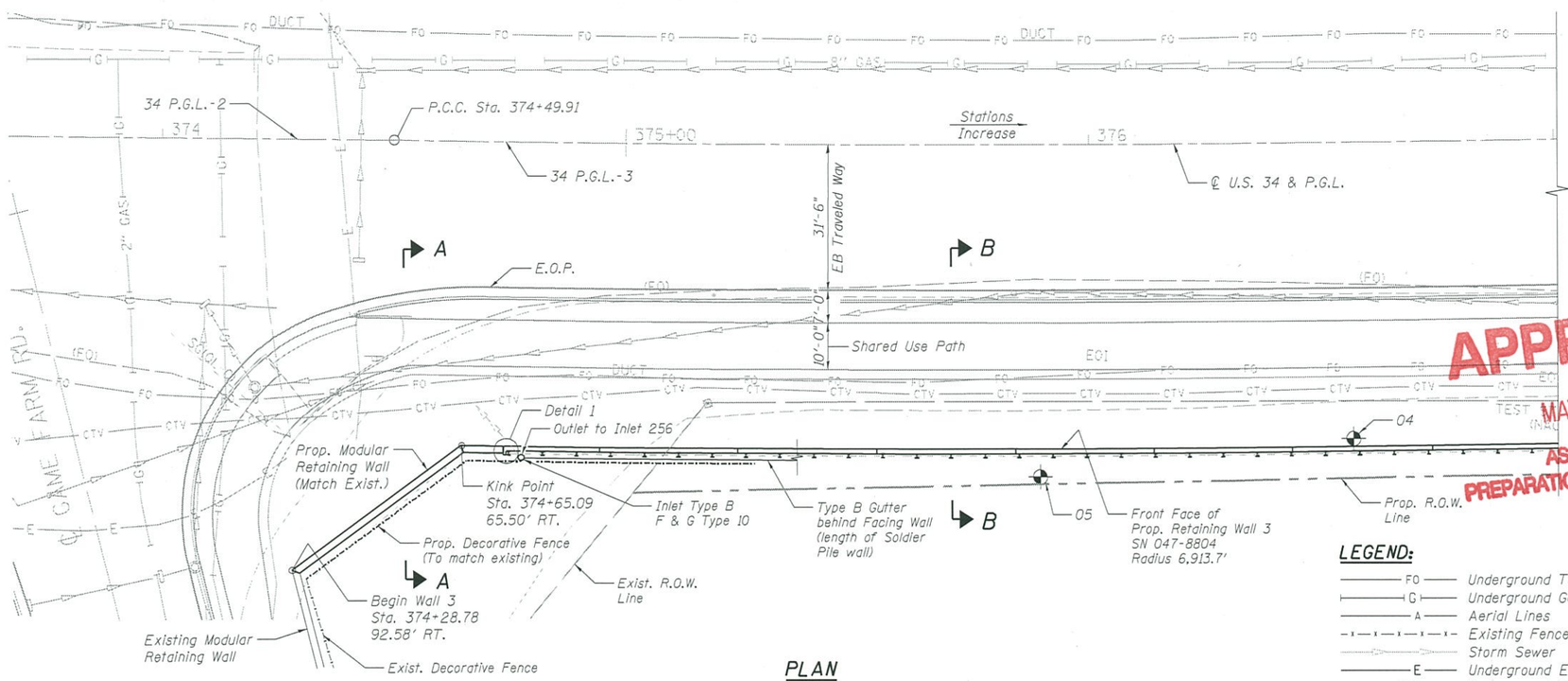

PLAN

APPROVED
MAY 23 2016
AS A BASIS FOR PREPARATION OF DETAILED PLANS

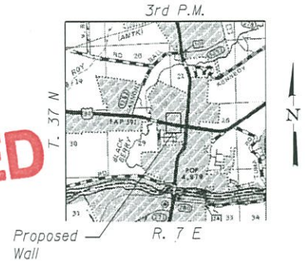

LOCATION SKETCH

LEGEND:

- FO — Underground Telephone
- G — Underground Gasline
- A — Aerial Lines
- Existing Fence
- Storm Sewer
- E — Underground Electric
- CTV — Underground Cable TV
- Soil Boring

GENERAL PLAN AND ELEVATION
RETAINING WALL 3
F.A.P. 591 (U.S. 34)
SEC. (13 BR-1)BR
KENDALL COUNTY
STATION 374+28.78 TO 379+00.00
STRUCTURE NO. 047-8804

benesch
Alfred Benesch & Company
205 North Michigan Avenue, Suite 2400
Chicago, Illinois 60601
312-565-0450
Job No. 3938.14

FILE NAME = 0478804_66993_001_gpe.dgn	USER NAME = habdou	DESIGNED - HMA	REVISED -
		CHECKED - DTS	REVISED -
	PLOT SCALE =	DRAWN - RMC	REVISED -
	PLOT DATE = 05\23\2016	CHECKED - KJN	REVISED -

STATE OF ILLINOIS
DEPARTMENT OF TRANSPORTATION

STRUCTURE NO. 047-8804
SHEET NO. 1 OF 3 SHEETS

F.A.P. RTE.	SECTION	COUNTY	TOTAL SHEETS	SHEET NO.
591	(13 BR-1)BR	KENDALL	3	1
		CONTRACT NO. 66993		
		ILLINOIS FED. AID PROJECT		

X:\3900s\3938\Structures\US34overBlackberryCreek\TS&L\Plans\0478804_66993_001_gpe.dgn 10:21:41 05\23\2016

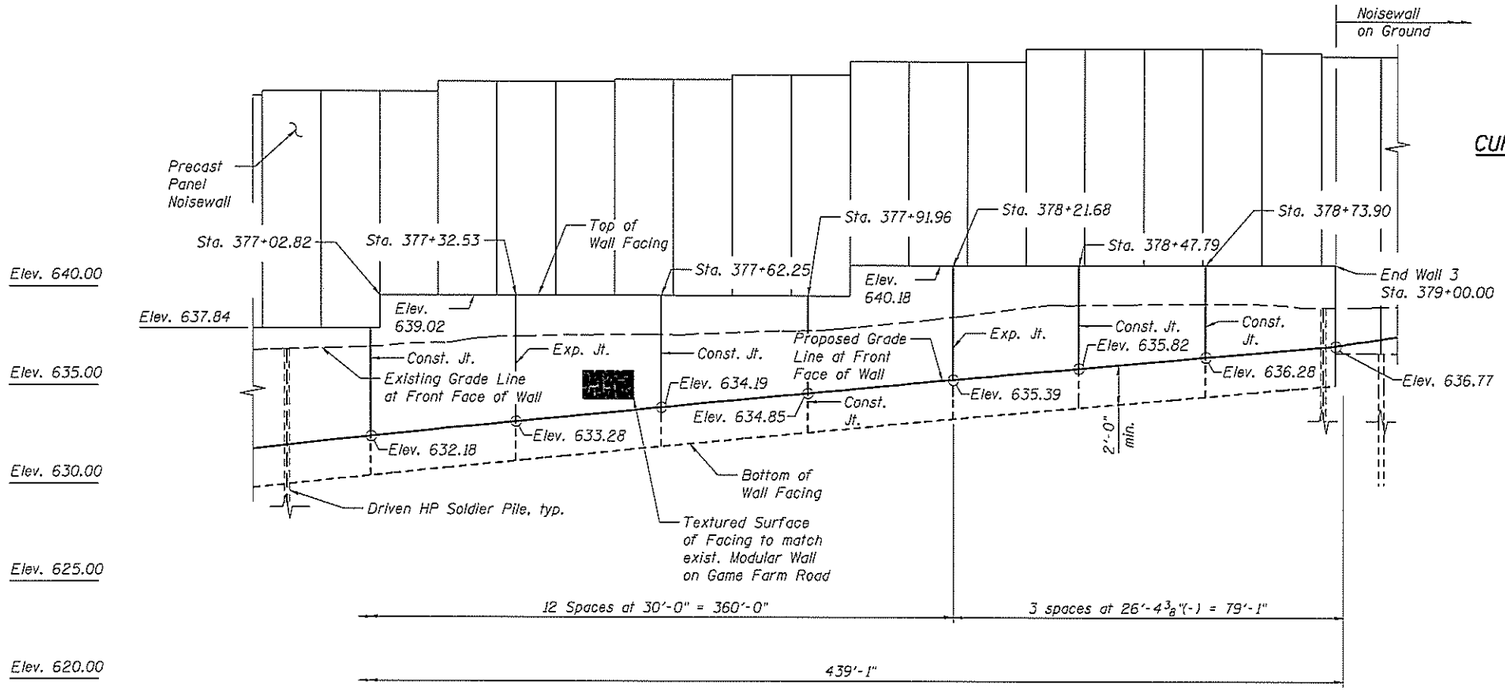

REFLECTED ELEVATION

CURVE DATA 34 P.G.L.-2

(U.S. 34)
PI STA. = 373+49.97
Δ = 0° 34' 47" (LT)
D = 0° 17' 24"
R = 19,757.32'
T = 99.94'
L = 199.87'
E = 0.25'
P.C. STA = 372+50.03
P.C.C. STA = 374+49.91

CURVE DATA 34 P.G.L.-3

(U.S. 34)
PI STA. = 378+34.31
Δ = 6° 25' 32" (LT)
D = 0° 50' 12"
R = 6,848.20'
T = 384.41'
L = 768.01'
E = 10.78
P.C.C. STA = 374+49.91
P.T. STA = 382+17.92

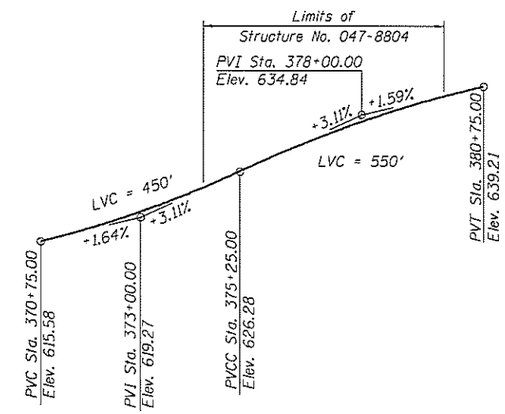

PROFILE GRADE U.S. 34

(Along ℄ U.S. 34)

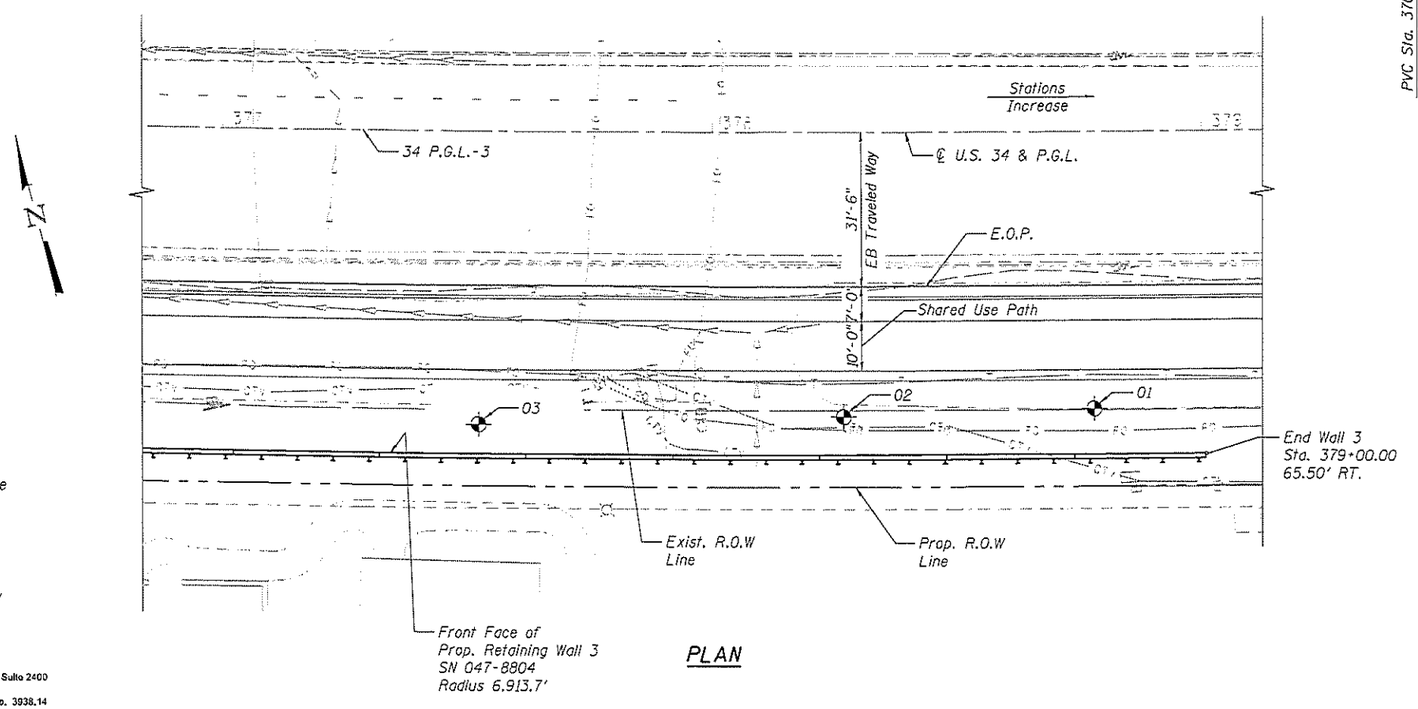

PLAN

N

NOTES:

1. Horizontal dimensions and length measured along Front Face of Concrete Facing.
2. Stations and offsets are given to Front Face of Concrete Facing relative to ℄ U.S. 34 & P.G.L.

LEGEND:

- FO — Underground Telephone
- G — Underground Gasline
- A — Aerial Lines
- Existing Fence
- Storm Sewer
- E — Underground Electric
- CTV — Underground Cable TV
- Soil Boring

benesch
Alfred Benesch & Company
205 North Michigan Avenue, Suite 2400
Chicago, Illinois 60601
312-565-0450 Job No. 3938.14

GENERAL PLAN AND ELEVATION
RETAINING WALL 3
F.A.P. 591 (U.S. 34)
SEC. (13 BR-1)BR
KENDALL COUNTY
STATION 374+28.78 TO 379+00.00
STRUCTURE NO. 047-8804

FILE NAME = 0478824_66993_002_gpe.dgn	USER NAME = heidou	DESIGNED - HMA	REVISED -
		CHECKED - DTS	REVISED -
	PLOT SCALE =	DRAWN - RMG	REVISED -
	PLOT DATE = 05\23\2016	CHECKED - KJN	REVISED -

STATE OF ILLINOIS
DEPARTMENT OF TRANSPORTATION

STRUCTURE NO. 047-8804
SHEET NO. 2 OF 3 SHEETS

F.A.P. RTE.	SECTION	COUNTY	TOTAL SHEETS	SHEET NO.
591	(13 BR-1)BR	KENDALL	3	2
		CONTRACT NO. 66993		
		ILLINOIS FED. AID PROJECT		

X:\3900s\3938\Structures\US34overBlackberryCreek\TS&L\Plans\0478804_66993_002_gpe.dgn 10:21:43 05\23\2016

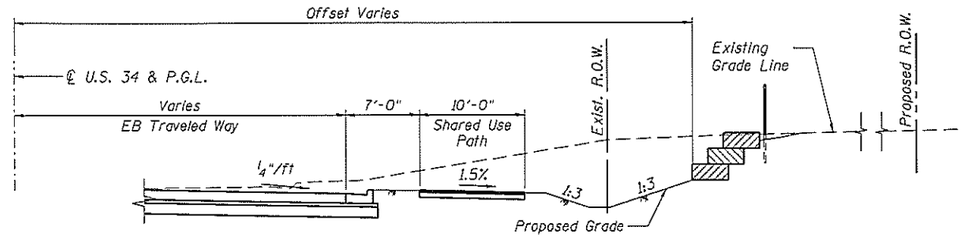

TYPICAL SECTION A-A

(Looking East)

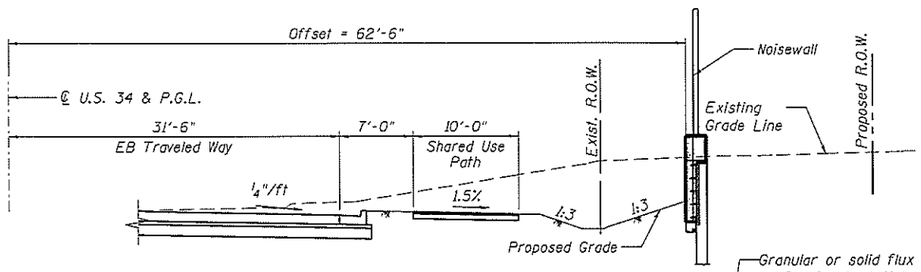

TYPICAL SECTION B-B

(Looking East)

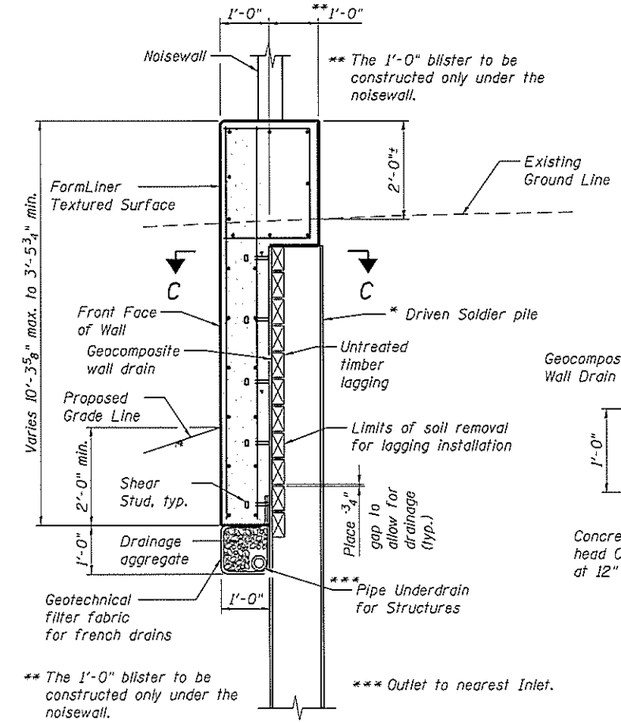

SECTION THRU WALL SHOWING PIPE UNDERDRAIN DETAIL AT SOLDIER PILE

(at Noisewall)

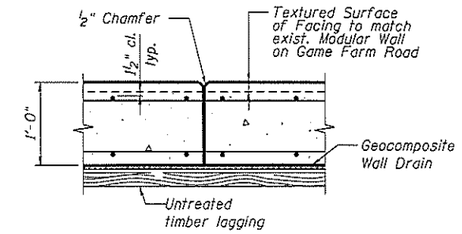

CONSTRUCTION JOINT DETAILS

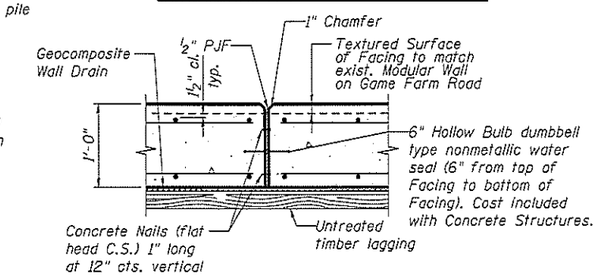

EXPANSION JOINT DETAILS

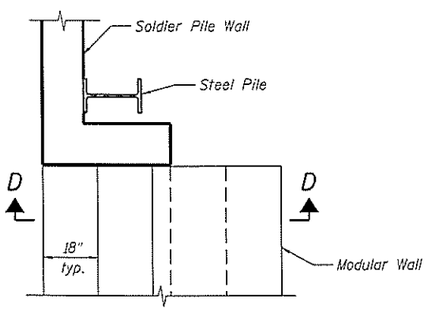

DETAIL 1

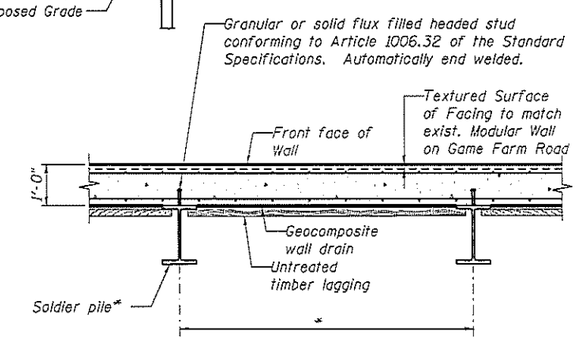

SECTION C-C

* Soldier pile section, spacing and tip elevation to be determined during final design.

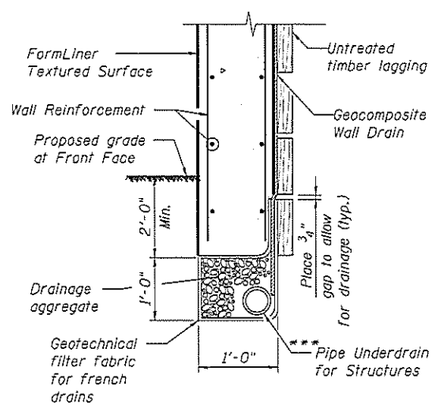

SECTION SHOWING PIPE UNDERDRAIN DETAIL BETWEEN SOLDIER PILES

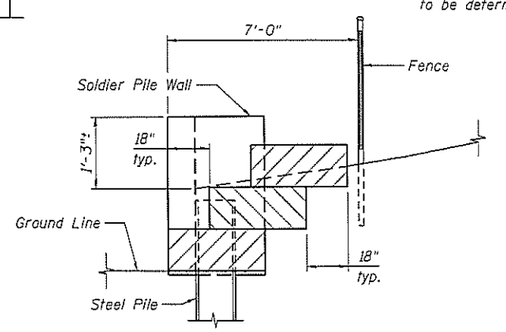

SECTION D-D

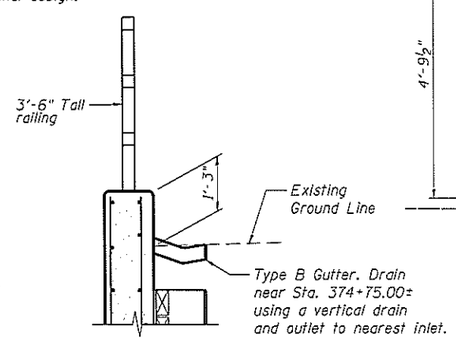

SECTION AT SOLDIER PILE WALL

(without Noisewall)

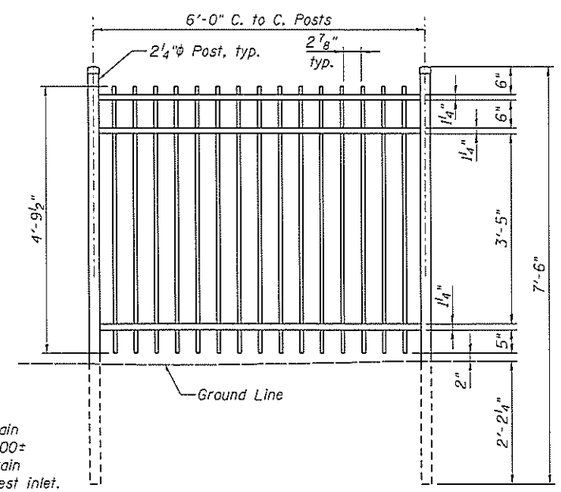

FENCE DETAIL (SPECIAL)

SECTIONS AND DETAILS
RETAINING WALL 3
F.A.P. 591 (U.S. 34)
SEC. (13 BR-1)BR
KENDALL COUNTY
STATION 374+28.78 TO 379+00.00
STRUCTURE NO. 047-8804

benesch

Alfred Benesch & Company
205 North Michigan Avenue, Suite 2400
Chicago, Illinois 60601
312-565-0450 Job No. 3938.14

FILE NAME = 0478804_66993_003_gpe.dgn	USER NAME = hebdou	DESIGNED - HMA	REVISED -
		CHECKED - MRB	REVISED -
	PLOT SCALE =	DRAWN - RMG	REVISED -
	PLOT DATE = 05\23\2016	CHECKED - KJN	REVISED -

STATE OF ILLINOIS
DEPARTMENT OF TRANSPORTATION

STRUCTURE NO. 047-8804

SHEET NO. 3 OF 3 SHEETS

F.A.P. RTE.	SECTION	COUNTY	TOTAL SHEETS	SHEET NO.
591	(13 BR-1)BR	KENDALL	3	3
		CONTRACT NO. 66993		
		ILLINOIS FED. AID PROJECT		

X:\3900s\3938\Structures\US34overBlackberryCreek\TS&L\Plans\0478804_66993_003_gpe.dgn 10:21:45 05\23\2016