Bench Mark: BM 11 - Chiseled square on northeast wingwall, Sta. 536+87.00, 18.40' LT. Elev. 604.71.

Existing Structure: S.N. 048-0015 was originally built in 1926 as S.B.I. Route 8, Section 42B. In 1980, the superstructure and portions of the substructure were removed and replaced under Section (42B-1)BR. In 2011, temporary steel support beams were installed under four beams. The structure consists of a single-span PPC deck beam superstructure supported by closed concrete abutments. The back to back abutment length is 38'-0" and the out to out width is 33'-0". Structure to be removed and replaced.

Traffic Control: One lane of traffic will be maintained utilizing stage construction.

Salvage: The existing steel beams located underneath the existing deck beams shall be carefully removed and salvaged. They shall be transported to a site designated by the Engineer and placed on wood blocking.

Notes:
1. Temporary Soil Retention System.
2. Structural steel shall be galvanized.
3. Optional field splice to accommodate galvanizing.
4. Existing steel beam, typ.

APPROVED

JUL 02 2014

AS A BASIS FOR
PREPARATION OF DETAILED PLANS

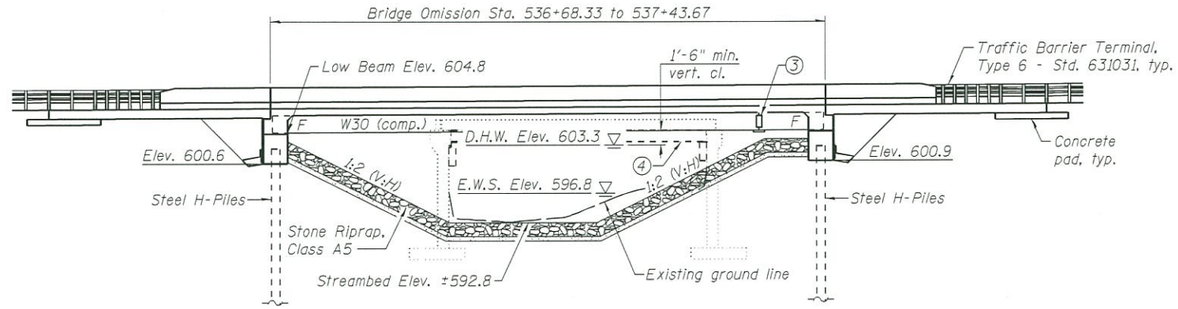

ELEVATION

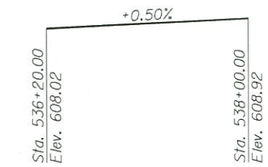

PROFILE GRADE
(Along ℄ Roadway)

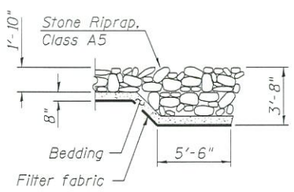

SECTION A-A

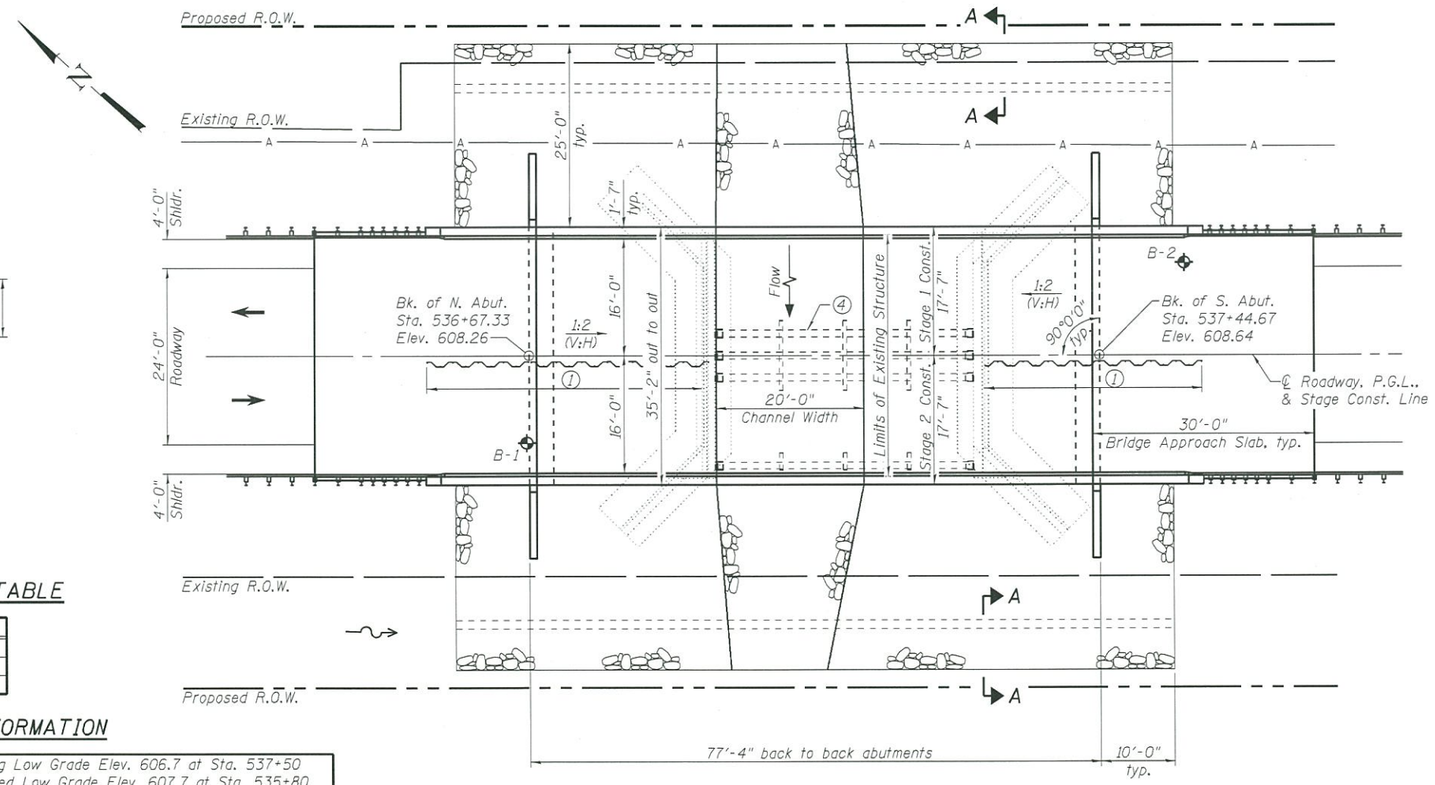

PLAN

DESIGN SPECIFICATIONS
2012 AASHTO LRFD Bridge Design Specifications, 6th Edition with 2013 Interims

DESIGN STRESSES
FIELD UNITS
f'c = 3,500 psi
fy = 60,000 psi (Reinforcement)
fy = 50,000 psi (M270 Grade 50) (2)

HIGHWAY CLASSIFICATION
F.A.P. 626 - IL Rte. 97
Functional Class: Minor Arterial (Rural)
ADT: 1,650 (2011); 2,013 (2031)
ADTT: 225 (2011); 274 (2031)
DHV: 201
Design Speed: 55 m.p.h.
Posted Speed: 55 m.p.h.
Two-Way Traffic Directional Distribution: 50:50

LOADING HL-93
Allow 50#/sq. ft. for future wearing surface.

SEISMIC DATA
Seismic Performance Zone (SPZ) = 1
Design Spectral Acceleration at 1.0 sec. (SD1) = 0.07g
Design Spectral Acceleration at 0.2 sec. (SDS) = 0.12g
Soil Site Class = C

LOCATION SKETCH

DESIGN SCOUR ELEVATION TABLE

Design Scour Elevations (ft.)	N. Abut.	S. Abut.
Q100	600.6	600.9
Q500	600.6	600.9

WATERWAY INFORMATION

Drainage Area = 8.75 sq. mi.

Existing Low Grade Elev. 606.7 at Sta. 537+50
Proposed Low Grade Elev. 607.7 at Sta. 535+80

Flood	Freq. Yr.	Q C.F.S.	Opening Sq. Ft. Exist.	Opening Sq. Ft. Prop.	Nat. H.W.E.	Head - Ft. Exist.	Head - Ft. Prop.	Headwater El. Exist.	Headwater El. Prop.
	10	1,690	258	348	602.3	0.9	0.8	603.2	603.1
Design	50	2,710	292	408	603.3	3.0	2.3	606.3	605.6
Base	100	3,180	306	433	603.7	3.2	2.3	606.9	606.0
Scour Design Check	200	3,647	320	458	604.1	3.1	2.3	607.2	606.4
Exist. Overtopping	80	3,075	303	-	603.6	3.2	-	606.8	-
Max. Calc.	500	4,320	-	489	604.6	-	2.6	-	607.2

GENERAL PLAN & ELEVATION
IL RTE. 97 OVER LITTLE HAW CREEK
F.A.P. RTE. 626 - SEC. 42-(B,B-1)BR-1
KNOX COUNTY
STATION 537+06.00
STRUCTURE NO. 048-0097

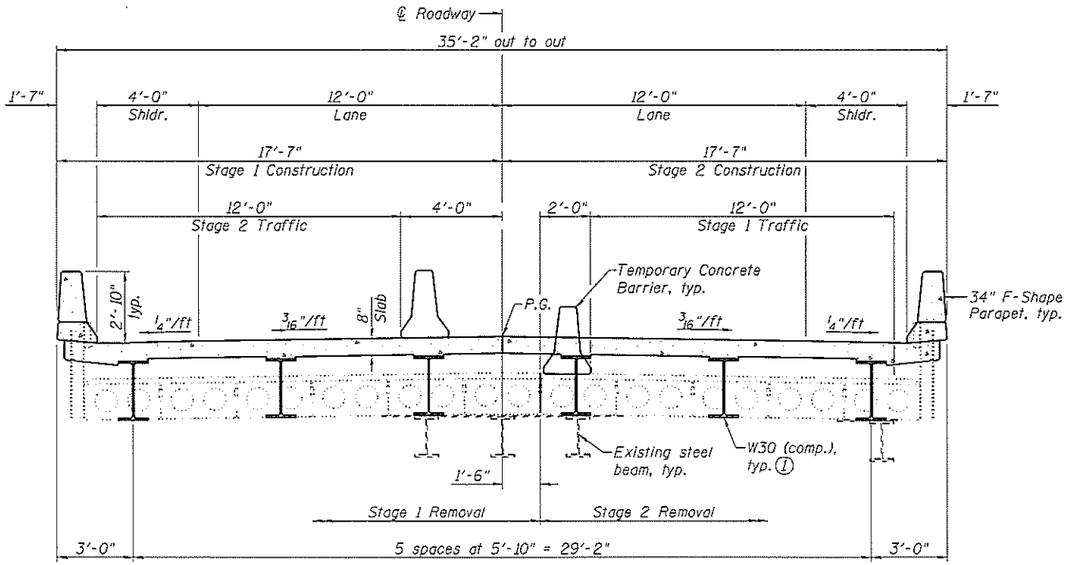

CROSS SECTION
(Looking South)

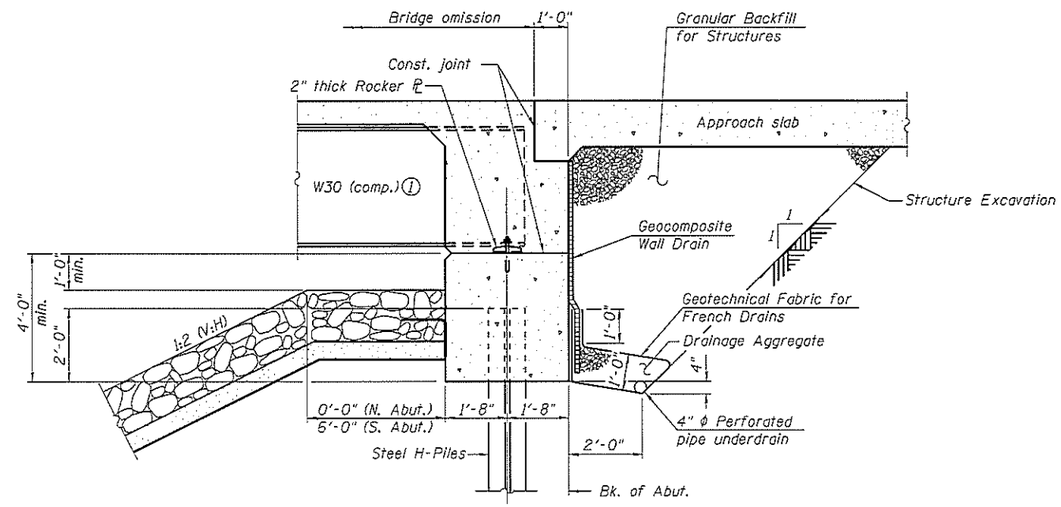

SECTION THRU INTEGRAL ABUTMENT

Notes:
(1) Size beam so that a closure pour is not required due to dead load deflection.
(2) The condition of the existing deck beams for the duration of Stage 1 traffic should be verified during final design. If their condition changes, the proposed staging sequence shall be re-evaluated.

DETAILS
IL RTE. 97 OVER LITTLE HAW CREEK
F.A.P. RTE. 626 - SEC. 42-(B,B-1)BR-1
KNOX COUNTY
STATION 537+06.00
STRUCTURE NO. 048-0097

GATES ASSOCIATES Engineering • Architecture	USER NAME =	DESIGNED - MAG	REVISED
		CHECKED - SJN	REVISED
	PLOT SCALE =	DRAWN - MAG	REVISED
	PLOT DATE =	CHECKED - SJN	REVISED

STATE OF ILLINOIS
DEPARTMENT OF TRANSPORTATION

SHEET NO. 2 OF 2 SHEETS

F.A.P. RTE.	SECTION	COUNTY	TOTAL SHEETS	SHEET NO.
626	42-(B,B-1)BR-1	KNOX		
		CONTRACT NO. 68754		
		ILLINOIS FED. AID PROJECT		