Bench Mark BM #5: Chiseled "□" cut in West end of S.W. wing wall of S.N 049-0049. Elev. 737.11

Existing Structures: Structure Numbers 049-0048 E.B. and 049-0049 W.B. built in 1960 as F.A Route 21. Section 12-VB-1. Existing dual structures each consist of three span, reinforced concrete decks supported on steel WF beams. The beams are supported on stub abutments on concrete piles and hammer head type piers supported on wooden piles. The back to back abutments length is 157'-8" and the out-to-out bridge deck dimension is 34'-4" in the existing conditions. Traffic is to be maintained using cross-overs to allow for full bridge closure during deck replacement.

No salvage.

No deck drains will be permitted in the span over tracks or within 10' of crossarms of a railroad pole line.

## HIGHWAY CLASSIFICATION

WB IL Rte. 120 (S.N. 049-0049)
F.A.P. Rte. 342
Functional Class: Other Principal Arterial
ADT: 16,350 (2013); 25,800 (2036)
ADTT: 10%
DHV: 2.580
Design Speed: 55 m.p.h.
Posted Speed: 50 m.p.h.
One-Way Traffic

EB IL Rte. 120 (S.N. 049-0048)
F.A.P. Rte. 342
Functional Class: Other Principal Arterial
ADT: 16,350 (2013); 25,800 (2036)
ADTT: 10%
DHV: 2.580
Design Speed: 55 m.p.h.
Posted Speed: 50 m.p.h.
One-Way Traffic

## DESIGN SPECIFICATIONS

2002 AASHTO
Standard Specifications for Highway Bridges.
17th Edition

## LOADING HS 20-44

Allow 50#/sq. ft. for future wearing surface.

## SEISMIC DATA

Seismic Performance Category (SPC) = A
Horizontal Bedrock Acceleration Coefficient (A) = 0.035g
Site Coefficient (S) = 1.0

## DESIGN STRESSES

**FIELD UNITS (Existing Construction)**

fc = 800 psi (substructure)
fs = 20,000 psi (reinforcement)
fs = 18,000 psi (structural steel)

**FIELD UNITS (New Construction)**

f'c = 3,500 psi
fy = 60,000 psi (Reinforcement)
fy = 50,000 psi (M270 Grade 50)

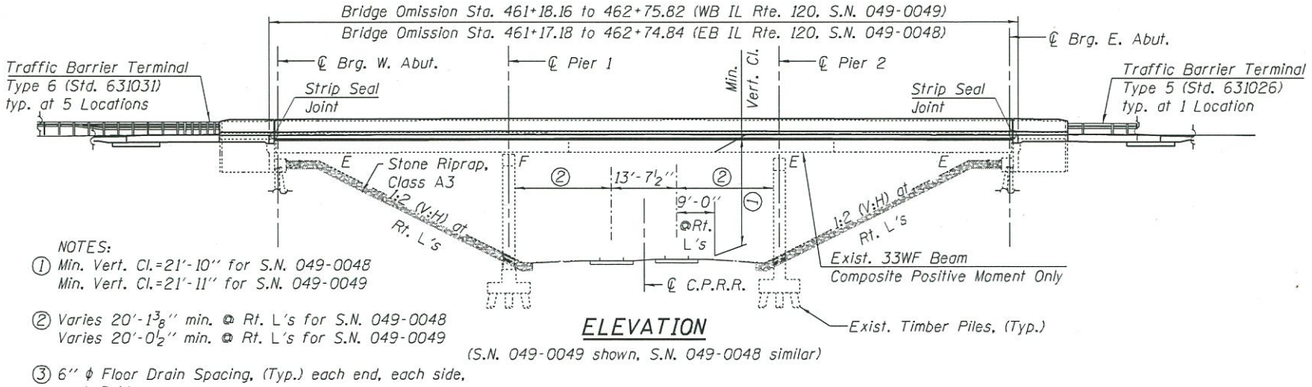


NOTES:
① Min. Vert. Cl.=21'-10" for S.N. 049-0048
Min. Vert. Cl.=21'-11" for S.N. 049-0049

② Varies 20'-1⅜" min. @ Rt. L's for S.N. 049-0048
Varies 20'-0½" min. @ Rt. L's for S.N. 049-0049

③ 6" ϕ Floor Drain Spacing, (Typ.) each end, each side, each Bridge

## ELEVATION

(S.N. 049-0049 shown, S.N. 049-0048 similar)

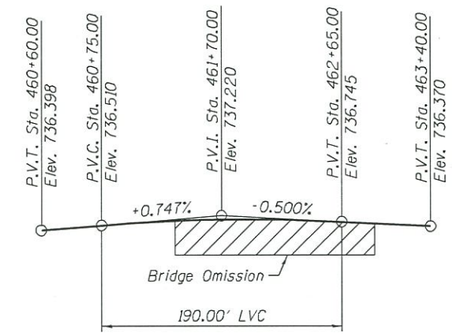


## PROFILE GRADE LINE IL RTE. 120 (WB)

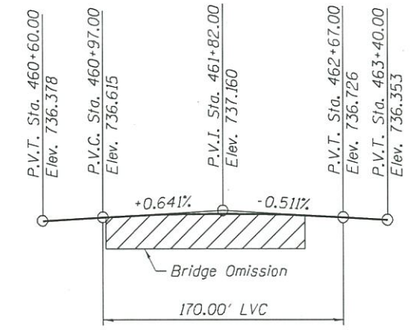


## PROFILE GRADE LINE IL RTE. 120 (EB)

## SCOPE OF WORK

1. Remove existing concrete deck and overlay and replace with 8" reinforced concrete deck.
2. Add shear studs to existing beams to enable composite action in positive moment region.
3. Jack and crib all existing beams at abutments.
4. Remove and replace existing back wall and modify existing wingwalls to accomodate the new approach slabs.
5. Remove existing roller bearings at abutments and replace with elastomeric bearings.
6. Remove and replace existing approach slab.
7. Replace eroded embankment at abutments and place stone rip-rap full length of slope.
8. Perform substructure repairs through formed concrete repairs and epoxy crack injection.
9. Remove and replace end diaphragms.

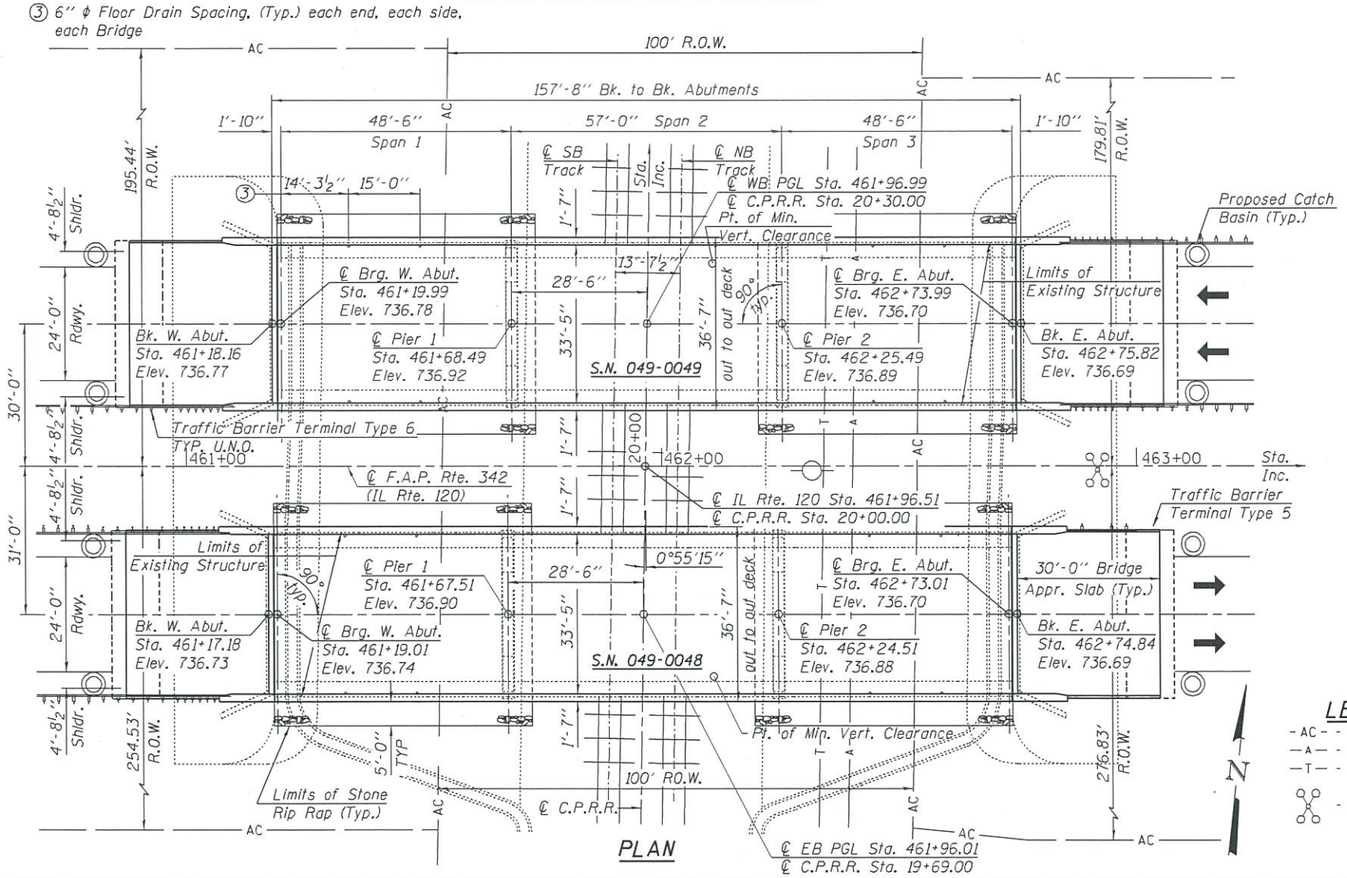


## PLAN

APPROVED
APR 21 2015
AS A BASIS FOR PREPARATION OF DETAILED PLANS

## LEGEND

- AC - - Access Control and ROW
—A— - Aerial Line
—T— - Telephone Line
- Existing High Mast Light Tower

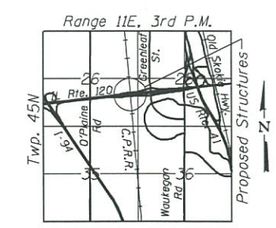


## LOCATION SKETCH

## GENERAL PLAN
## ILLINOIS ROUTE 120 OVER C.P.R.R.
## F.A.P. RTE. 342
## SEC. 12(VB-1&2) & 12R-1HB-2(BR)
## LAKE COUNTY
## STATION 461+96.51
## STRUCTURE NO. 049-0048 & 049-0049

H:\Jobs2013\20133014\CAD\Structural\dgn\049-0048,0049_Mainline_TSL\00\0490048-60X40-TSL-001.dgn
4/20/2015 3:28:26 PM

GRAEF
8501 W. Higgins Road; Suite 280
Chicago, Illinois 60631; (773) 399-0112

| | | | |
|---|---|---|---|
| USER NAME = | DESIGNED - NR | REVISED - | |
| | CHECKED - JAZ | REVISED - | |
| PLOT SCALE = | DRAWN - DLG | REVISED - | |
| PLOT DATE = 4/20/2015 | DATE - 04/17/2015 | REVISED - | |

STATE OF ILLINOIS
DEPARTMENT OF TRANSPORTATION

GENERAL PLAN
S.N. 049-0048 AND S.N. 049-0049
SHEET NO. 1 OF 2 SHEETS

| F.A.P. RTE. | SECTION | COUNTY | TOTAL SHEETS | SHEET NO. |
|---|---|---|---|---|
| 342 | 12(VB-1&2) & 12R-1HB-2(BR) | LAKE | $SA1$ | $TOT$ |
| | | CONTRACT NO. 60X40 | | |
| | | ILLINOIS FED. AID PROJECT | | |

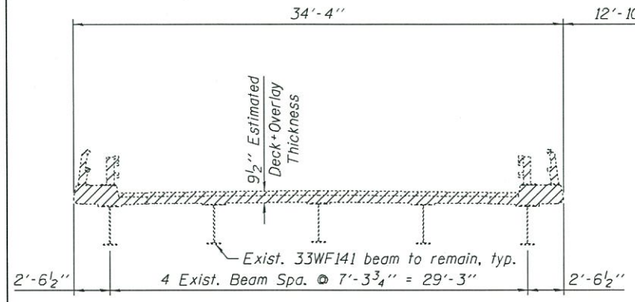


STAGE I REMOVAL

(Looking East)

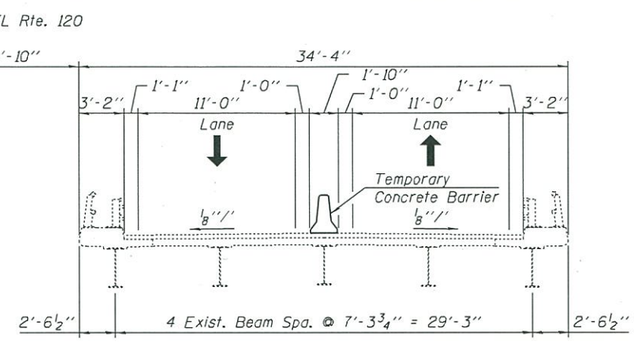


STAGE I TRAFFIC

(Looking East)

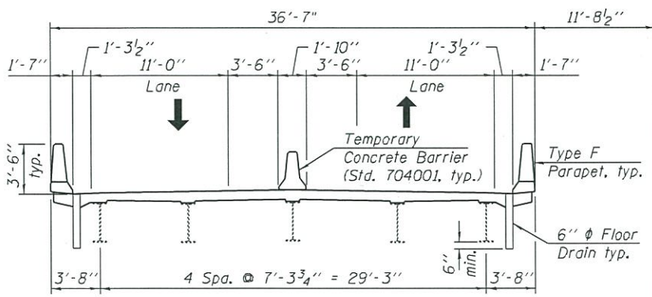


STAGE I CONSTRUCTION & STAGE II TRAFFIC

(Looking East)

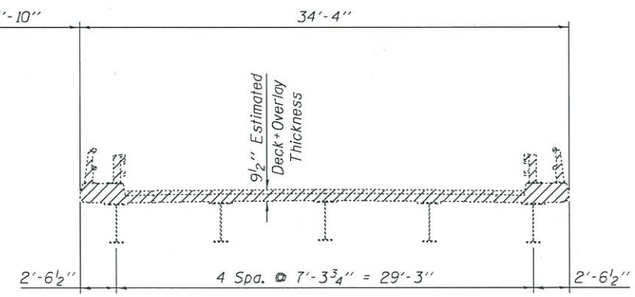


STAGE II REMOVAL

(Looking East)

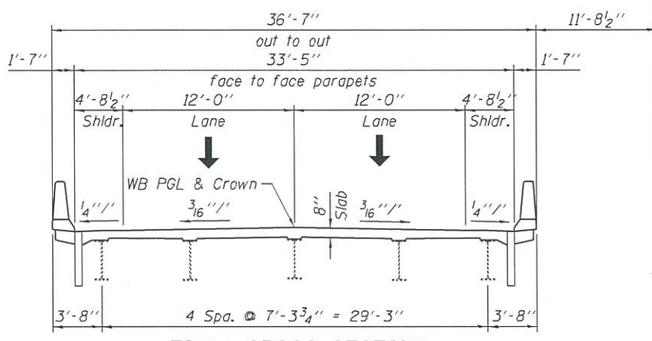


FINAL CROSS SECTION

(Looking East)

S.N. 049-0049

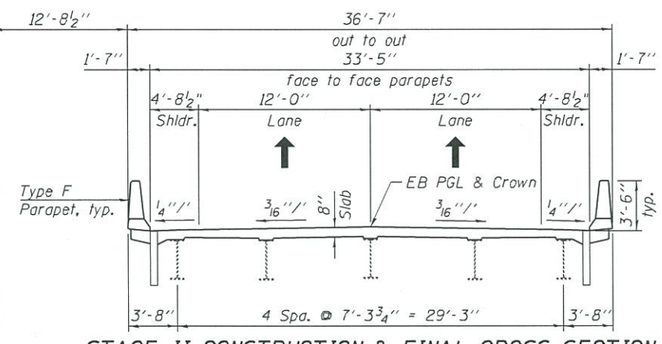


STAGE II CONSTRUCTION & FINAL CROSS SECTION

(Looking East)

S.N. 049-0048

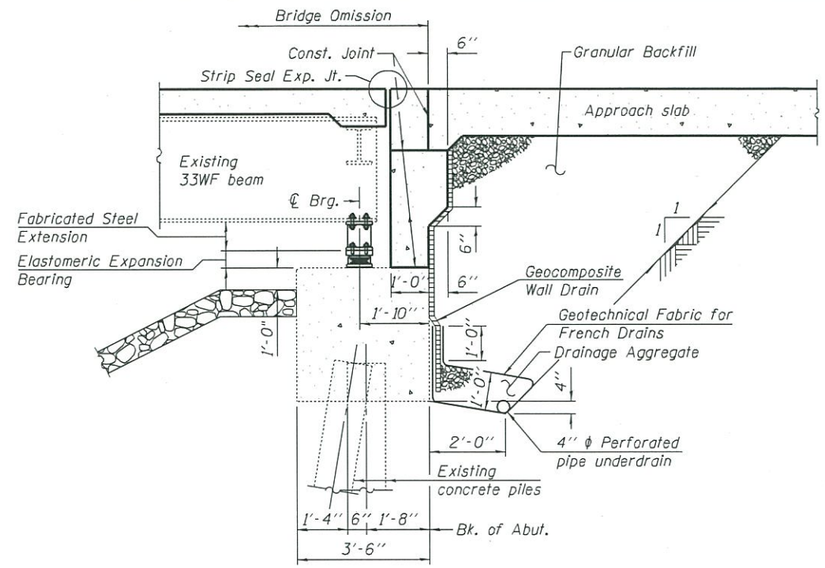


SECTION THRU PILE SUPPORTED STUB ABUTMENT

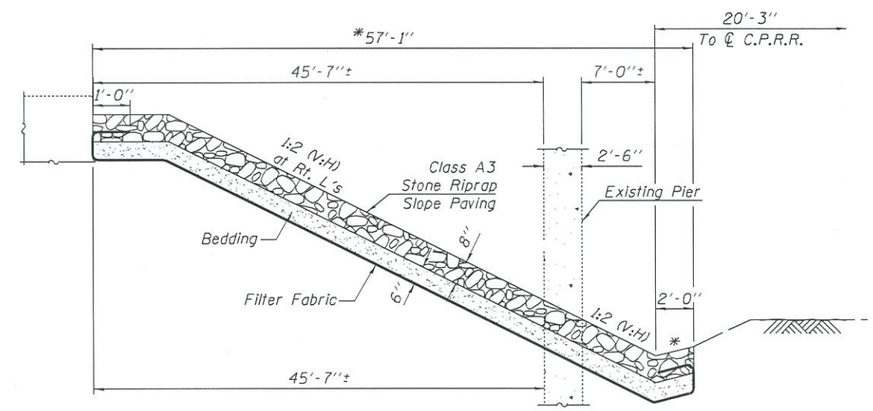


SECTION THRU AGGREGATE SLOPEWALL

*Final gutter width and slope wall length to be determined during Final Design Phase

*1:4 (V:H)

**EXISTING PROFILE GRADE T/RAIL SB RR TRACK

| West Rail | | East Rail | |
|---|---|---|---|
| Station | Elev. | Station | Elev. |
| 21+17.19 | 711.04 | 21+16.83 | 711.05 |
| 20+86.62 | 710.99 | 20+86.74 | 710.99 |
| 20+45.48 | 710.91 | 20+44.97 | 710.91 |
| 20+15.61 | 710.85 | 20+15.36 | 710.85 |
| 19+82.92 | 710.82 | 19+83.42 | 710.82 |
| 19+53.52 | 710.82 | 19+54.18 | 710.79 |
| 19+14.48 | 710.78 | 19+14.48 | 710.78 |
| 18+83.88 | 710.78 | 18+83.40 | 710.80 |

**EXISTING PROFILE GRADE T/RAIL NB RR TRACK

| West Rail | | East Rail | |
|---|---|---|---|
| Station | Elev. | Station | Elev. |
| 21+16.20 | 711.26 | 21+15.76 | 711.25 |
| 20+86.26 | 711.25 | 20+85.96 | 711.23 |
| 20+44.62 | 711.23 | 20+44.71 | 711.21 |
| 20+15.64 | 711.22 | 20+15.53 | 711.20 |
| 19+84.01 | 711.21 | 19+83.65 | 711.21 |
| 19+54.15 | 711.21 | 19+54.26 | 711.20 |
| 19+14.22 | 711.23 | 19+13.87 | 711.21 |
| 18+83.97 | 711.26 | 18+84.11 | 711.24 |

**Information based on surveyed Top Of Rail Elevations.

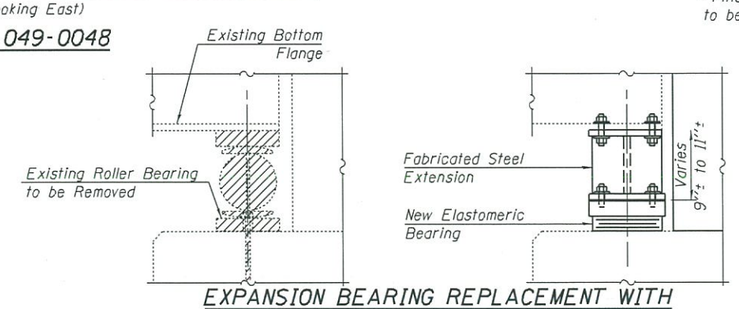


EXPANSION BEARING REPLACEMENT WITH ELASTOMERIC BEARINGS

(West & East Abutments)

H:\Jobs2013\2013014\CAD\Structural\dgn\049-0048,0049_Mainline_TSL\00\049004B-60X40-TSL-002.dgn
4/20/2015 3:30:18 PM

GRAEF
8501 W. Higgins Road; Suite 280
Chicago, Illinois 60631; (773) 399-0112

| | | | |
|---|---|---|---|
| USER NAME = | DESIGNED - NR | REVISED - | |
| | CHECKED - JAZ | REVISED - | |
| PLOT SCALE = | DRAWN - DLG | REVISED - | |
| PLOT DATE = 4/20/2015 | DATE - 04/17/2015 | REVISED - | |

STATE OF ILLINOIS
DEPARTMENT OF TRANSPORTATION

DETAILS
S.N. 049-0048 & 049-0049
SHEET NO. 2 OF 2 SHEETS

| F.A.P. RTE. | SECTION | COUNTY | TOTAL SHEETS | SHEET NO. |
|---|---|---|---|---|
| 342 | 12(VB-1&2) & 12R-1HB-2(BR) | LAKE | $SA2$ | $TOT$ |
| | | CONTRACT NO. 60X40 | | |
| | | ILLINOIS FED. AID PROJECT | | |