Benchmark: A Bronze U.S.G.S. Benchmark set in the Northeast Abutment at existing structure, Station 1053+64, Offset 40' Rt, Elev. 655.76.

Existing Structure: S.N. 049-0006 was built in 1922, widened in 1968 and reconstucted in 1990 as S.N. 049-0166 at Sta. 1053+30. The existing structure is a three span reinforced concrete superstructure supported on reinforced concrete abutments and piers on piles. Length is 88'-10 7/8" from back to back of abutments. Width is 76'-1 5/8" from out to out deck. It carries five lanes of U.S. Route 45/Illinois Route 21 over Indian Creek. Structure to be removed and replaced. Stage construction will be utilized to maintain one lane of traffic in each direction at all times.

No Salvage

Event/Limit State	Design Scour Elevations (ft.)				Item 113
	S. Abut.	Pier 1	Pier 2	N. Abut.	
Q100	629.75	635.31	635.31	631.76	5
Q500	629.82	635.20	635.20	631.59	
Design	629.75	635.31	635.31	631.76	
Check	629.82	635.20	635.20	631.59	

WATERWAY INFORMATION

Drainage Area = 37.78 Square Miles

Exist. Low Grade Elev. = 654.32 @ Sta. 1053+34
Prop. Low Grade Elev. = 655.39 @ Sta. 1054+49

Flood	Freq. Year.	Q (cfs)	Opening Sq. Ft.		Nat. H.W.E.		Head - Ft.		Headwater Elev.	
			Exist.	Prop.	Exist.	Prop.	Exist.	Prop.	Exist.	Prop.
Design	10	1560	668.61	762.72	650.14	650.27	0.00	0.00	650.14	650.27
Base	50	2700	810.56	816.42	651.81	651.93	0.00	0.00	651.81	651.93
Max. Calc.	100	3100	850.51	856.37	652.28	652.40	0.00	0.00	652.28	652.40
Overtopping (Ex.)	500	4000	927.86	933.72	653.19	653.31	0.00	0.00	653.19	653.31

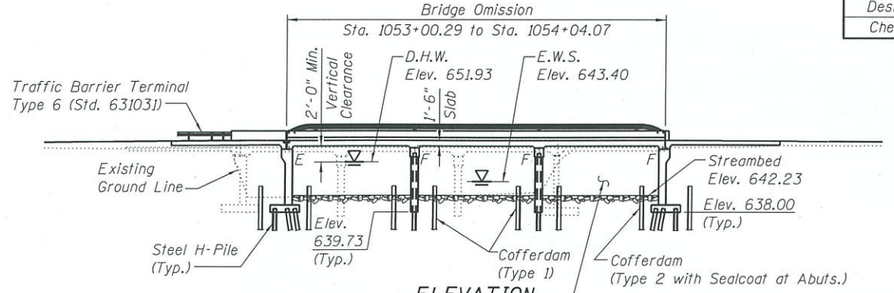

ELEVATION

NOTE:

Due to the temperature and shrinkage concerns on this wide slab bridge, special design requirements and reinforcement placement will be required.

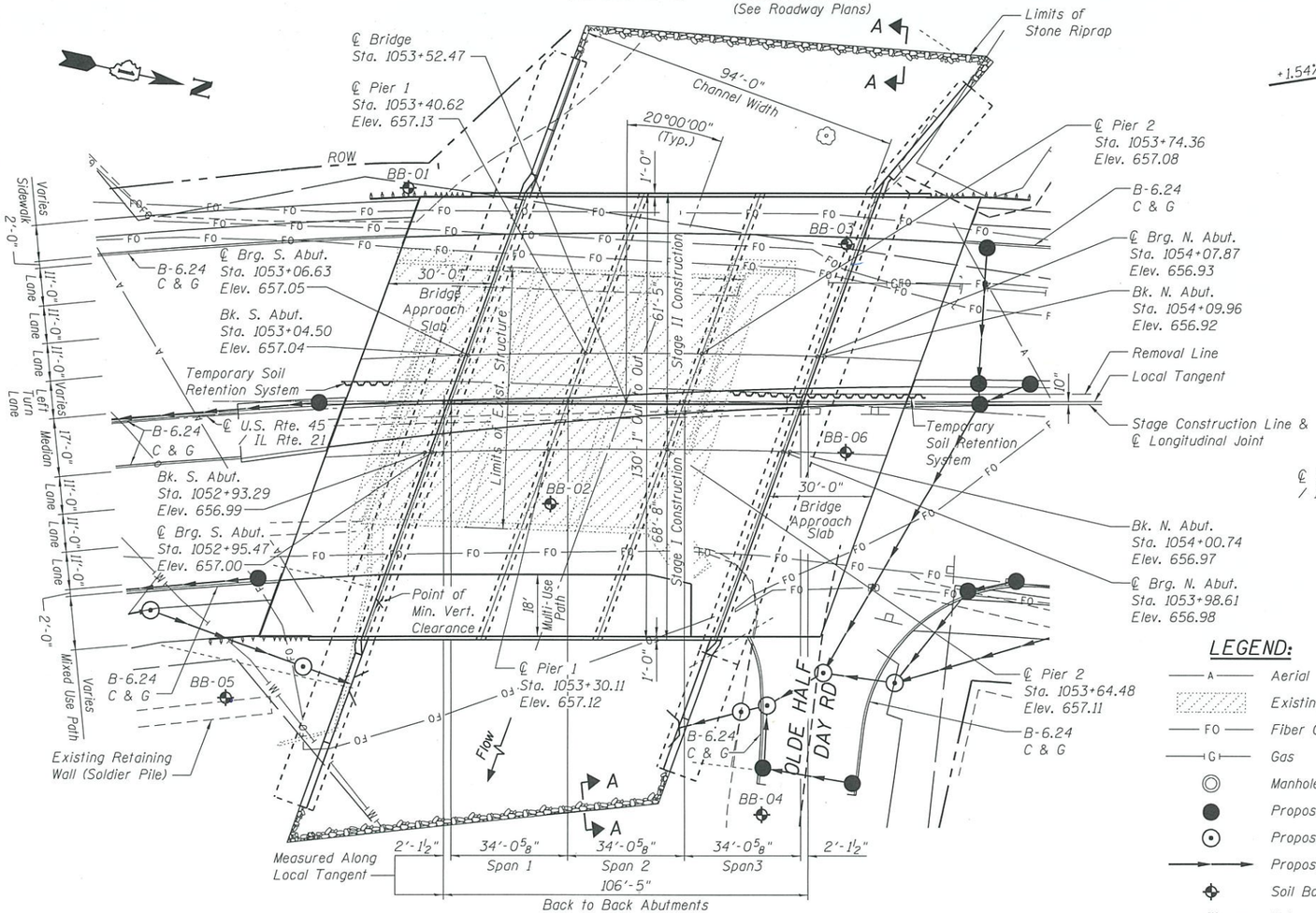

PLAN

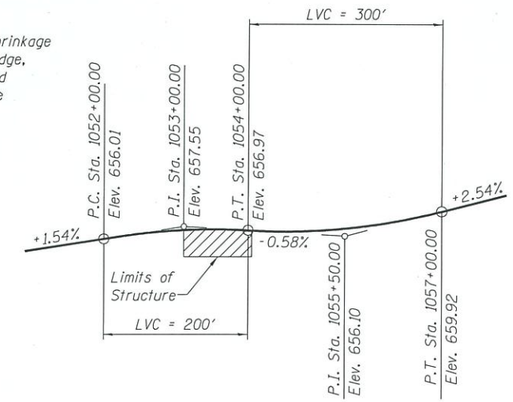

PROFILE GRADE

(Along ℄ US Rte. 45/ IL Rte. 21)

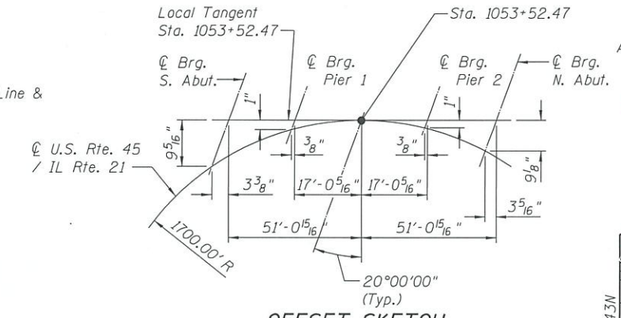

OFFSET SKETCH

HIGHWAY CLASSIFICATION

F.A.P. Rte. 330 - U.S. Rte. 45 / IL Rte. 21
Functional Class: Strategic Regional Arterial
ADT: 31,600 (2015)/43,600 (2030)
DHV Future: 4930 (2030)
ADTT: 3.4% (2015)
Design Speed: 45 m.p.h.
Posted Speed: 45 m.p.h.
Directional Distribution 50:50

DESIGN SPECIFICATIONS

2017 AASHTO LRFD Bridge Design Specifications, 8th Edition

2012 Illinois Department of Transportation Bridge Manual

DESIGN STRESSES

FIELD UNITS

f'c = 3,500 psi (Substructure)
f'c = 4,000 psi (Superstructure)
fy = 60,000 psi (Reinforcement)

SEISMIC DATA

Seismic Performance Category (SPZ) = 1
Design Spectral Acceleration at 1.0 sec. (S_{D1}) = 0.056 g
Design Spectral Acceleration at 0.2 sec. (S_{DS}) = 0.101 g
Soil Site Class: C

LOADING HL-93

Allow 50#/sq. ft. for future wearing surface.

APPROVED

MAY 22 2018

AS A BASIS FOR PREPARATION OF DETAILED PLANS

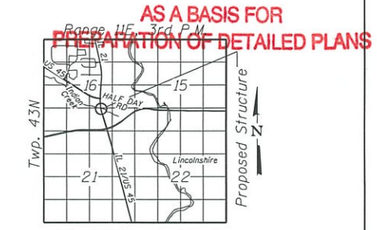

LOCATION SKETCH

LEGEND:

- Aerial
- Existing Structure
- Fiber Optic
- Gas
- Manhole
- Proposed Catchbasin
- Proposed Manhole
- Proposed Sewer
- Soil Boring Location
- Watermain

CURVE DATA

Prop. Curve IL21-2
P.I. Sta. = 1054+78.05
Δ = 22° 40' 32" (Rt)
D = 3° 22' 13"
R = 1,700.00'
L = 672.80'
T = 340.86'
E = 33.84'
P.C. Sta. = 1051+37.19
P.T. Sta. = 1058+09.99

GENERAL PLAN AND ELEVATION
US RTE. 45/IL RTE. 21 OVER INDIAN CREEK
F.A.P. RTE. 330 - SEC. 49-Y
LAKE COUNTY
STATION 1053+52.47
STRUCTURE NO. 049-0236

5/18/2018 3:39:01 PM
0490236-0162C16-TSL-001.dgn

Stanley Consultants INC.

USER NAME =	DESIGNED - CSP	REVISED -	
	CHECKED - DSE	REVISED -	
PLOT SCALE =	DRAWN - RTT	REVISED -	
PLOT DATE =	CHECKED - CSP	REVISED -	

STATE OF ILLINOIS
DEPARTMENT OF TRANSPORTATION

SHEET 1 OF 6 SHEETS

F.A.P. RTE.	SECTION	COUNTY	TOTAL SHEETS	SHEET NO.
333	49-Y	LAKE		
		CONTRACT NO. 62C16		
		ILLINOIS FED. AID PROJECT		

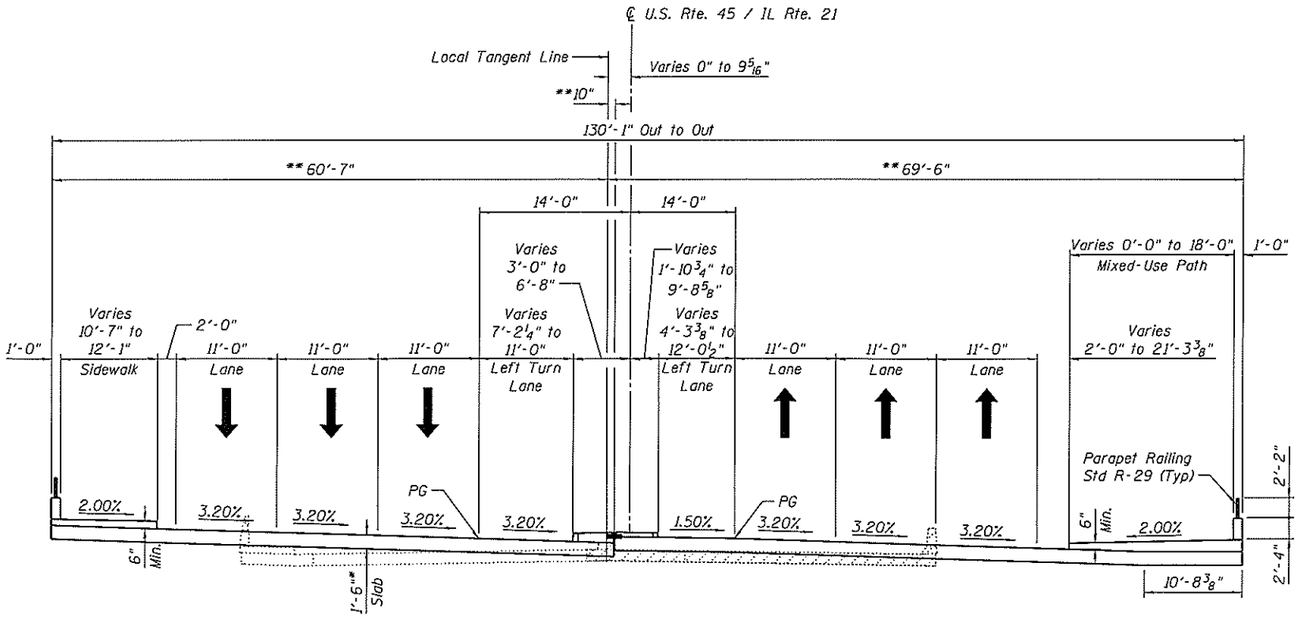

* Subject to Refinement during Final Design
** Measured perpendicular to Tangent Line

CROSS SECTION
(Looking North)

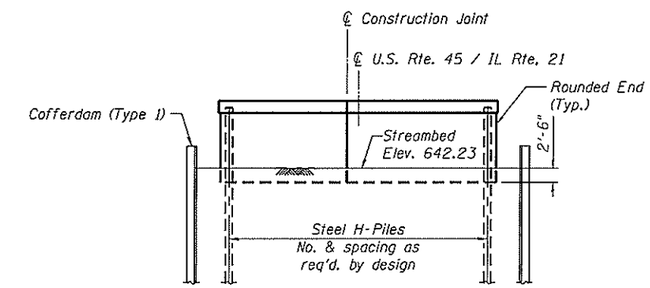

PIER SKETCH

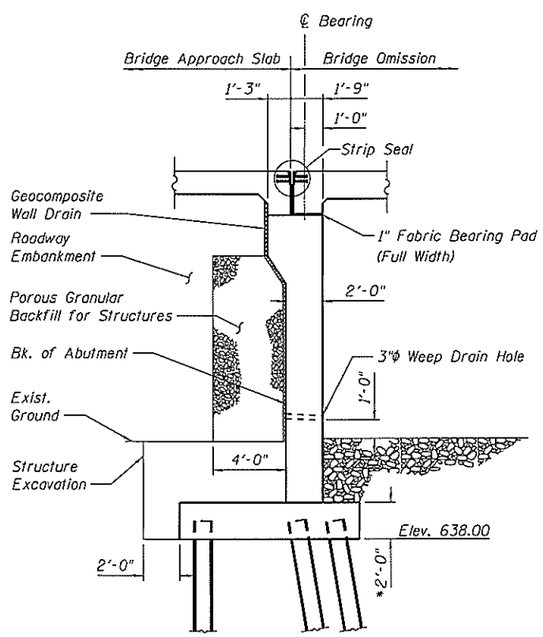

SECTION THRU SOUTH ABUTMENT
(Horizontal Dim at Rt. L's)

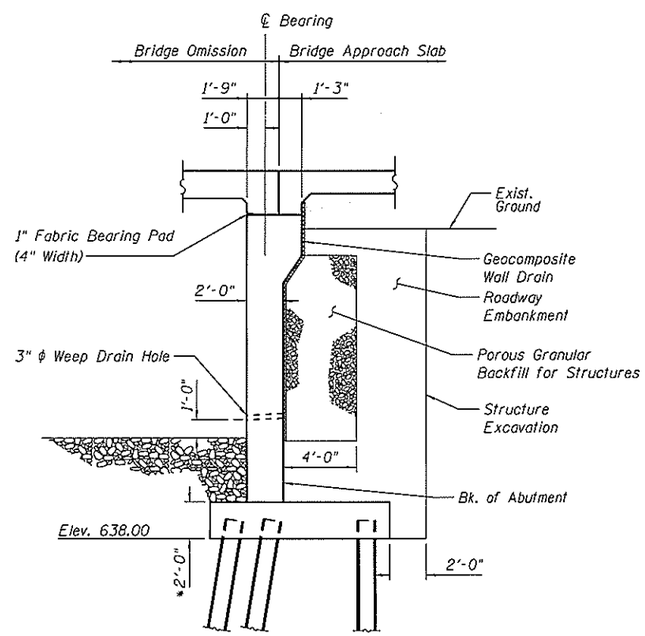

SECTION THRU NORTH ABUTMENT
(Horizontal Dim at Rt. L's)

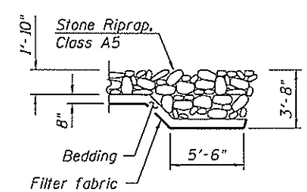

SECTION A-A

STAGE CONSTRUCTION
US RTE. 45/IL RTE. 21 OVER INDIAN CREEK
F.A.P. RTE. 330 - SEC. 49-Y
LAKE COUNTY
STATION 1053+52.47
STRUCTURE NO. 049-0236

5/18/2018 3:39:09 PM
0490236-D162C16-TSL-002.dgn

Stanley Consultants INC.

USER NAME =	DESIGNED - CSP	REVISED -	
	CHECKED - DSE	REVISED -	
PLOT SCALE =	DRAWN - RTT	REVISED -	
PLOT DATE =	CHECKED - CSP	REVISED -	

STATE OF ILLINOIS
DEPARTMENT OF TRANSPORTATION

SHEET 2 OF 6 SHEETS

F.A.P. RTE.	SECTION	COUNTY	TOTAL SHEETS	SHEET NO.
330	49-Y	LAKE		
		CONTRACT NO. 62C16		
		ILLINOIS FED. AID PROJECT		

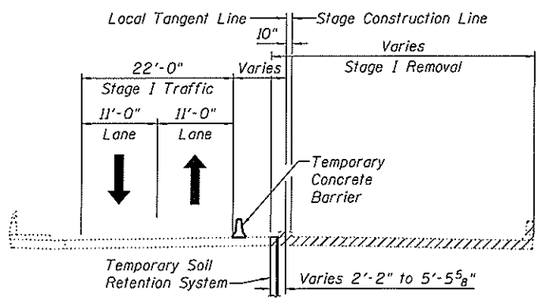

STAGE I REMOVAL
(Looking North)

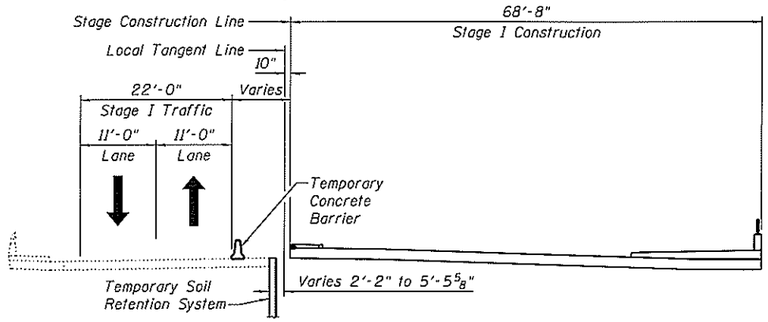

STAGE I CONSTRUCTION
(Looking North)

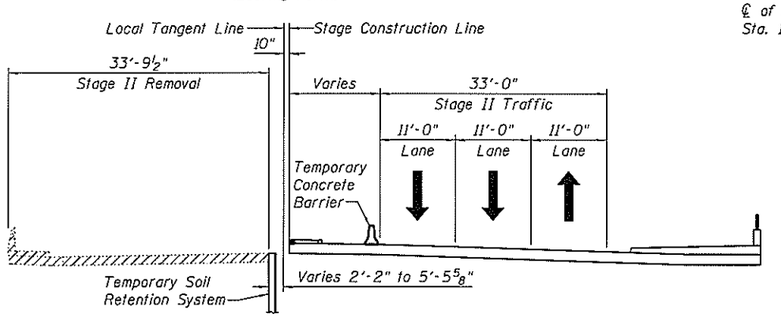

STAGE II REMOVAL
(Looking North)

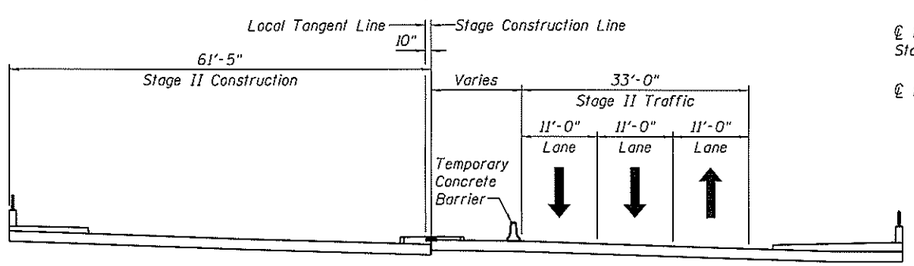

STAGE II CONSTRUCTION
(Looking North)

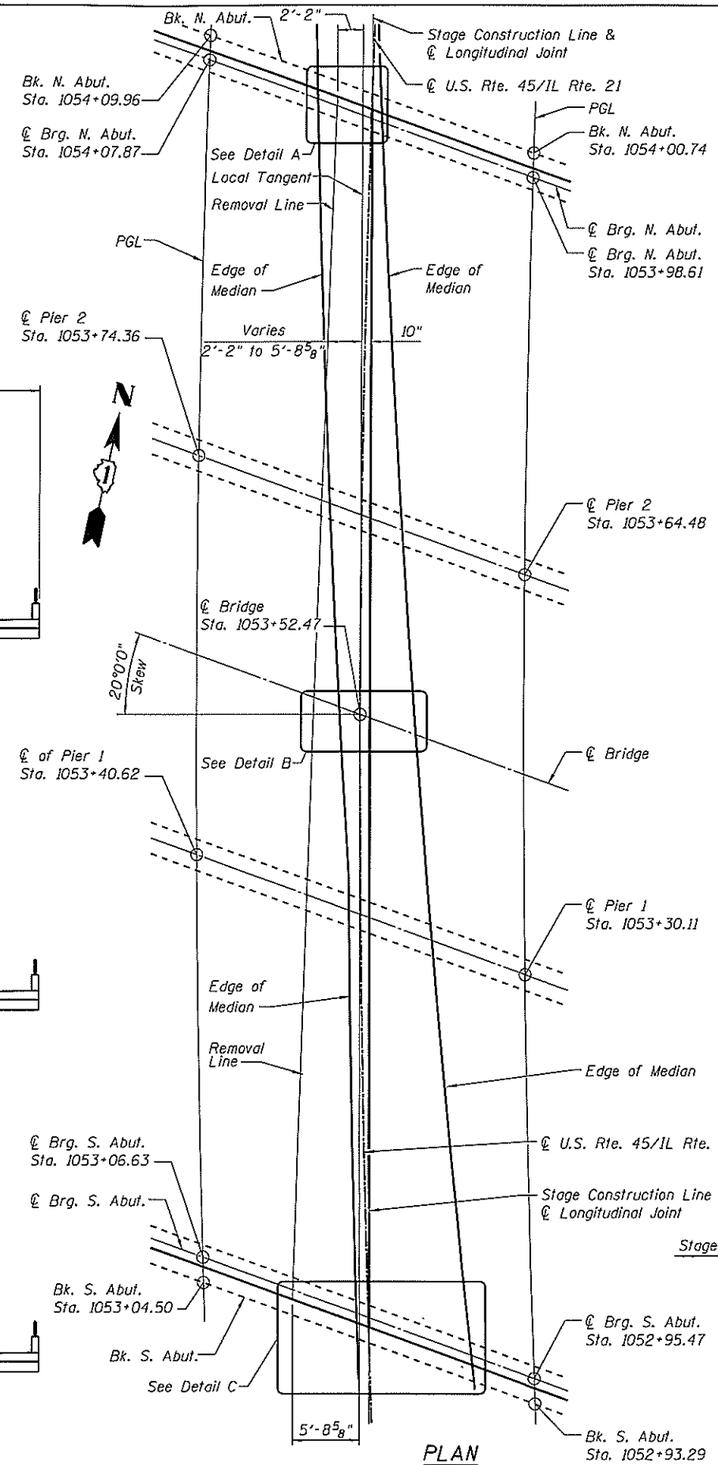

PLAN

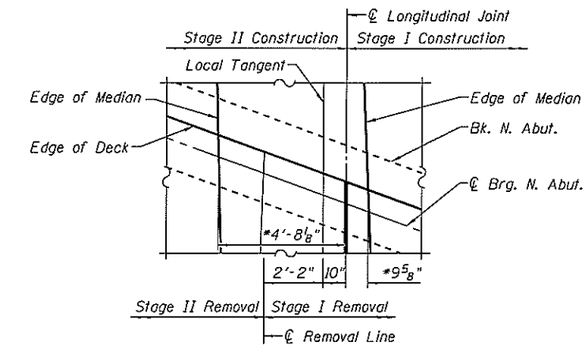

DETAIL A
(℄ U.S. Rte. 45/IL Rte. 21 not shown for clarity)

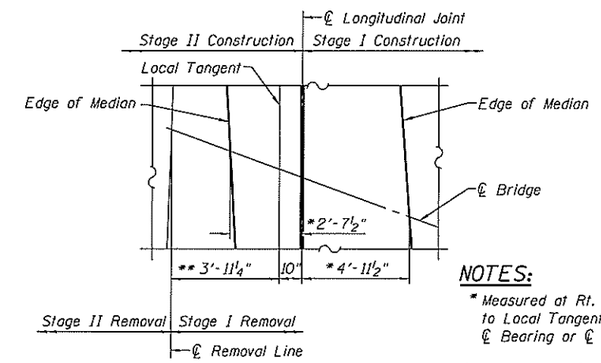

DETAIL B
(℄ U.S. Rte. 45/IL Rte. 21 not shown for clarity)

NOTES:

* Measured at Rt. L's to Local Tangent along ℄ Bearing or ℄ Bridge

** Measured at ℄ Bridge

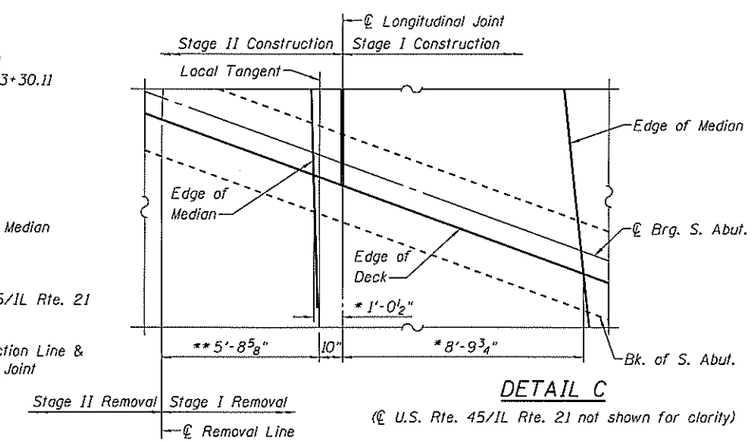

DETAIL C
(℄ U.S. Rte. 45/IL Rte. 21 not shown for clarity)

BRIDGE GENERAL DETAILS
US RTE. 45/IL RTE. 21 OVER INDIAN CREEK
F.A.P. RTE. 330 - SEC. 49-Y
LAKE COUNTY
STATION 1053+52.47
STRUCTURE NO. 049-0236

5/18/2018 3:39:18 PM
049C36-D162C16-TSL-003.dgn

Stanley Consultants INC.

USER NAME =	DESIGNED - CSP	REVISED -	
	CHECKED - DSE	REVISED -	
PLOT SCALE =	DRAWN - RTT	REVISED -	
PLOT DATE =	CHECKED - CSP	REVISED -	

STATE OF ILLINOIS
DEPARTMENT OF TRANSPORTATION

SHEET 3 OF 6 SHEETS

F.A.P. RTE.	SECTION	COUNTY	TOTAL SHEETS	SHEET NO.
330	49-Y	LAKE		
		CONTRACT NO. 62C16		
		ILLINOIS FED. AID PROJECT		

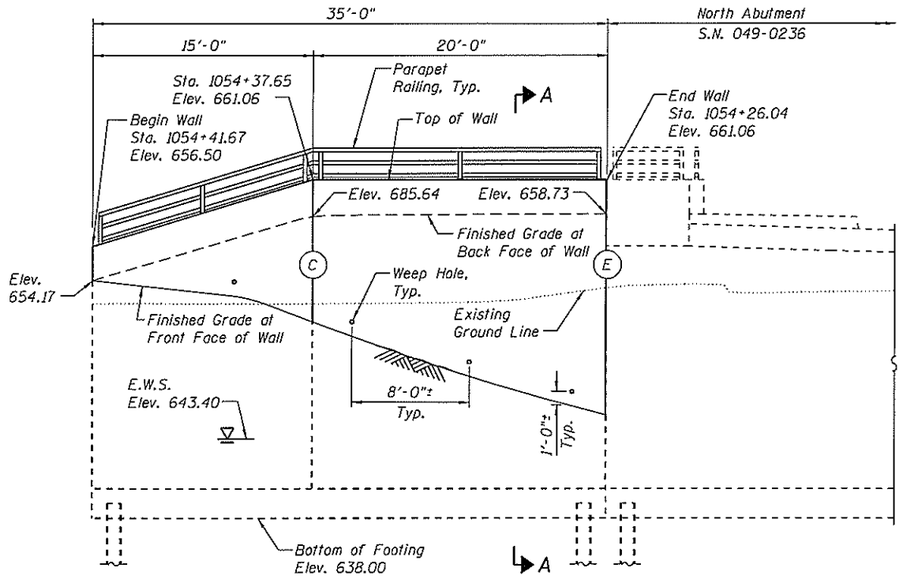

NORTHWEST WINGWALL ELEVATION

(Looking at Front Face of Wall)

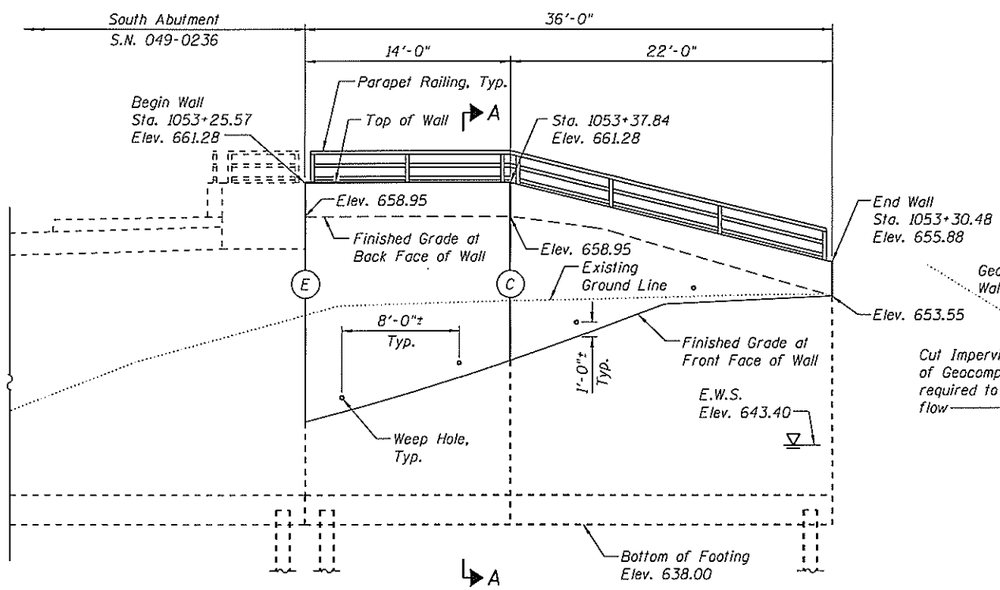

SOUTHWEST WINGWALL ELEVATION

(Looking at Front Face of Wall)

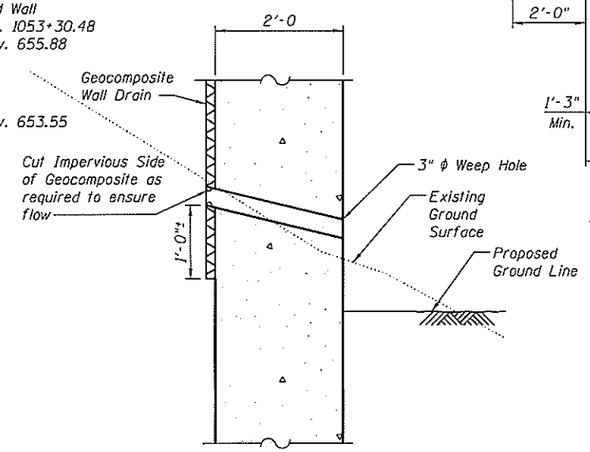

WEEP HOLE DRAIN DETAIL

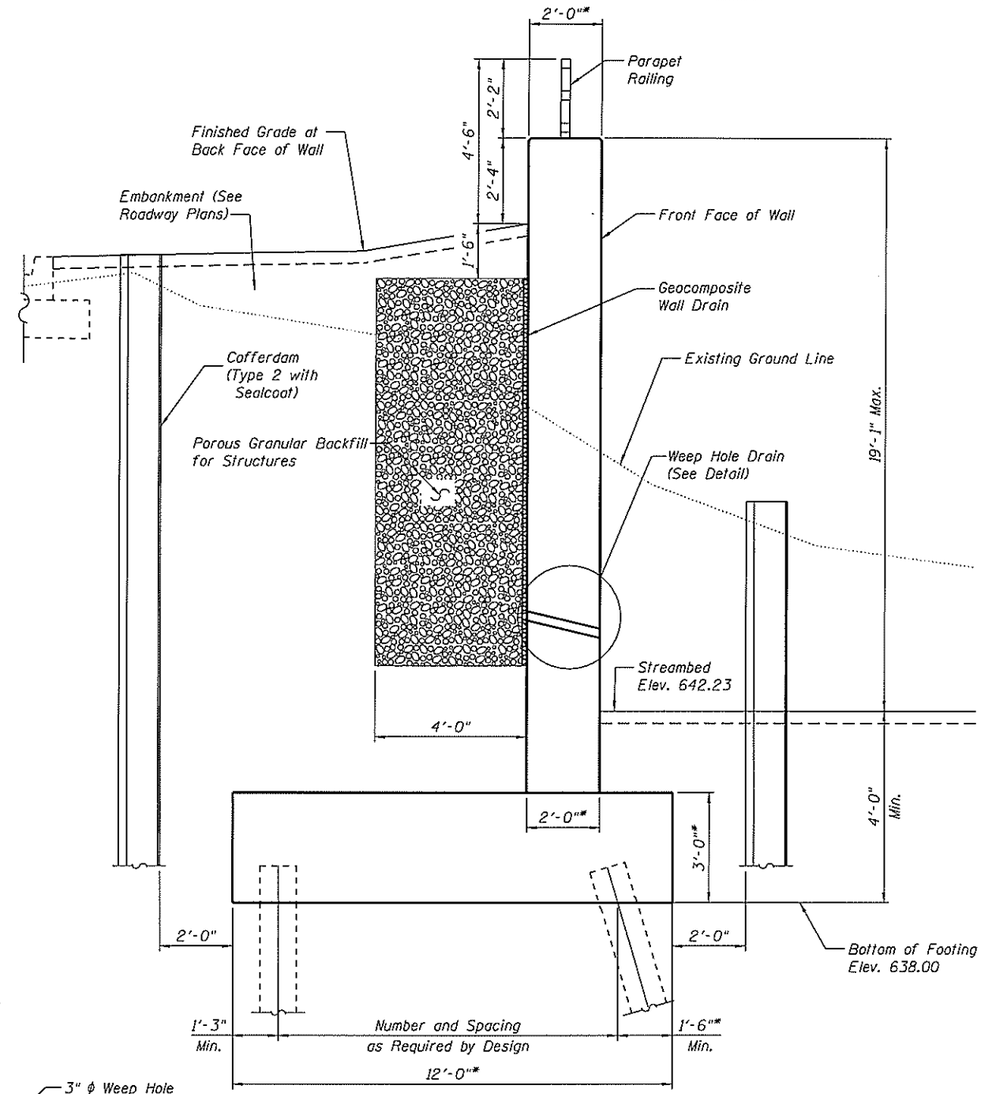

TYPICAL SECTION THRU RETAINING WALL

(Looking Downstream)

*Subject to Refinement during Final Design

WEST WINGWALL DETAILS
US RTE. 45/IL RTE. 21 OVER INDIAN CREEK
F.A.P. RTE. 330 - SEC. 49-Y
LAKE COUNTY
STATION 1053+52.47
STRUCTURE NO. 049-0236

5/18/2018 3:39:27 PM
0490236-0162C16-TSL-004.dgn

Stanley Consultants INC.

USER NAME =	DESIGNED - CSP	REVISED -	
	CHECKED - DSE	REVISED -	
PLOT SCALE =	DRAWN - RTT	REVISED -	
PLOT DATE =	CHECKED - CSP	REVISED -	

STATE OF ILLINOIS
DEPARTMENT OF TRANSPORTATION

SHEET 4 OF 6 SHEETS

F.A.P. RTE.	SECTION	COUNTY	TOTAL SHEETS	SHEET NO.
330	49-Y	LAKE		
		CONTRACT NO. 62C16		
		ILLINOIS FED. AID PROJECT		

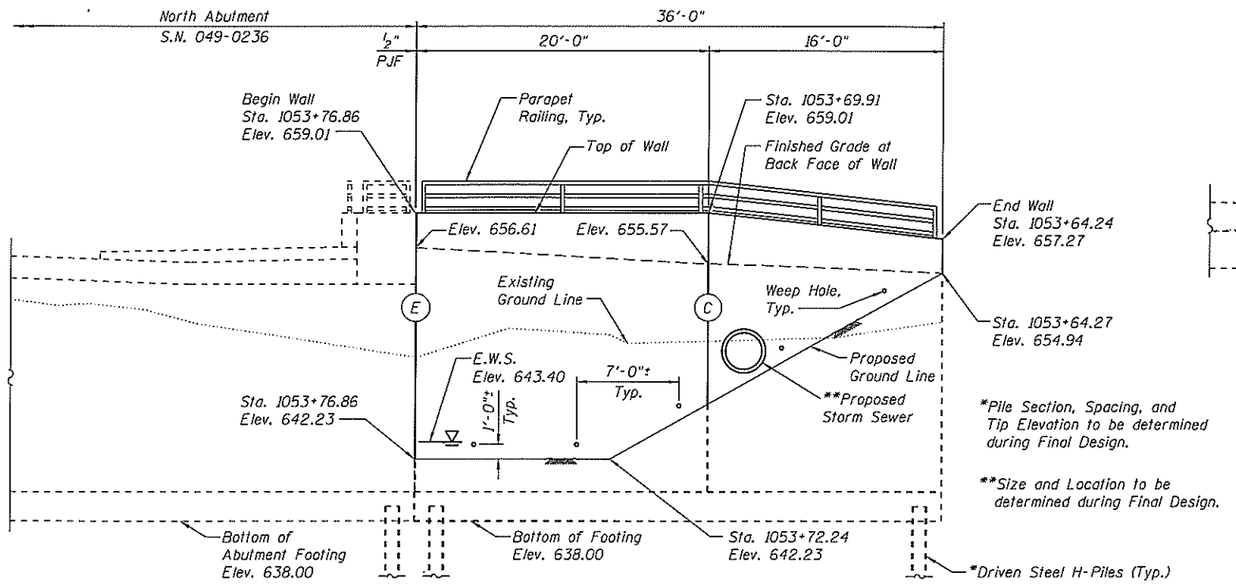

*Pile Section, Spacing, and Tip Elevation to be determined during Final Design.

**Size and Location to be determined during Final Design.

NORTHEAST WINGWALL ELEVATION

(Looking at Front Face of Wall)

BB-04

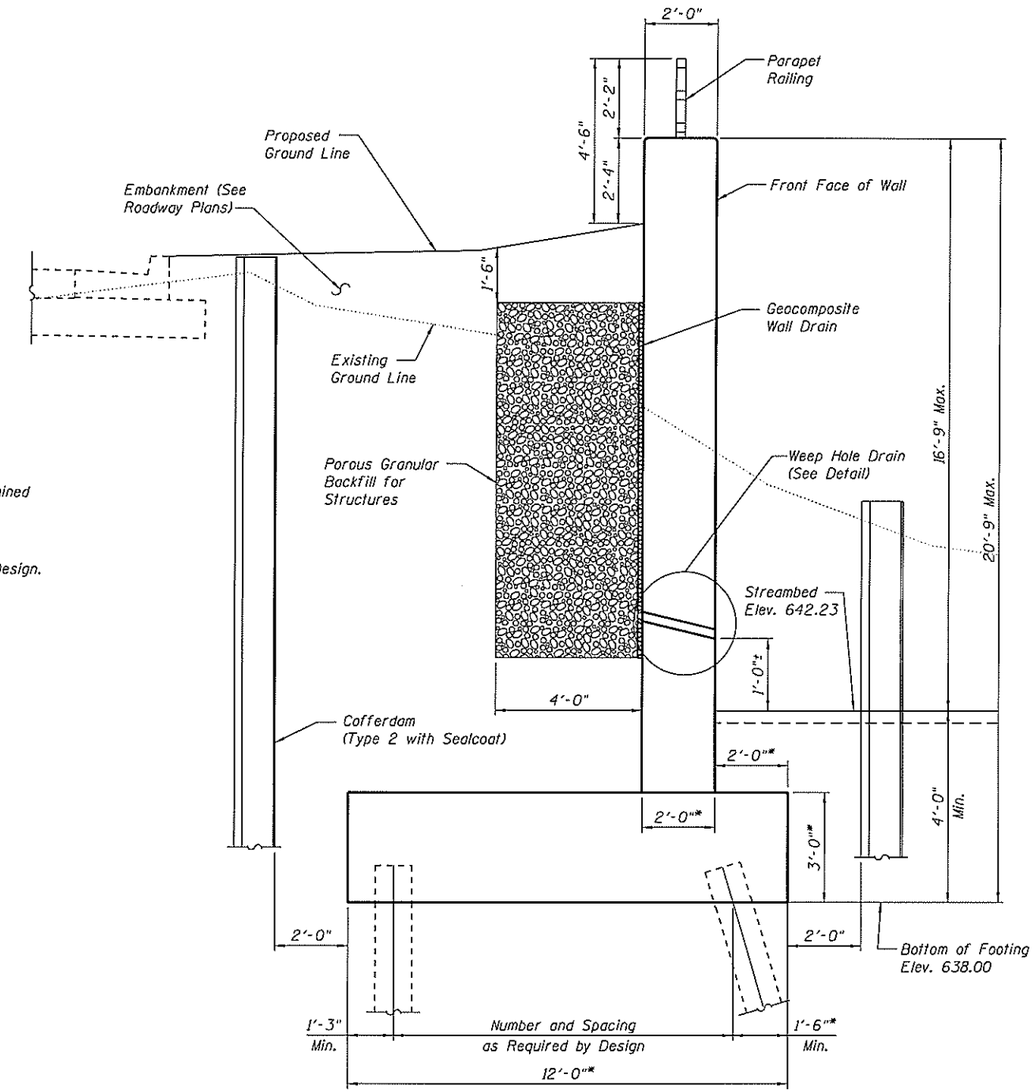

TYPICAL SECTION THRU RETAINING WALL

(Looking Downstream)

*Subject to Refinement during Final Design

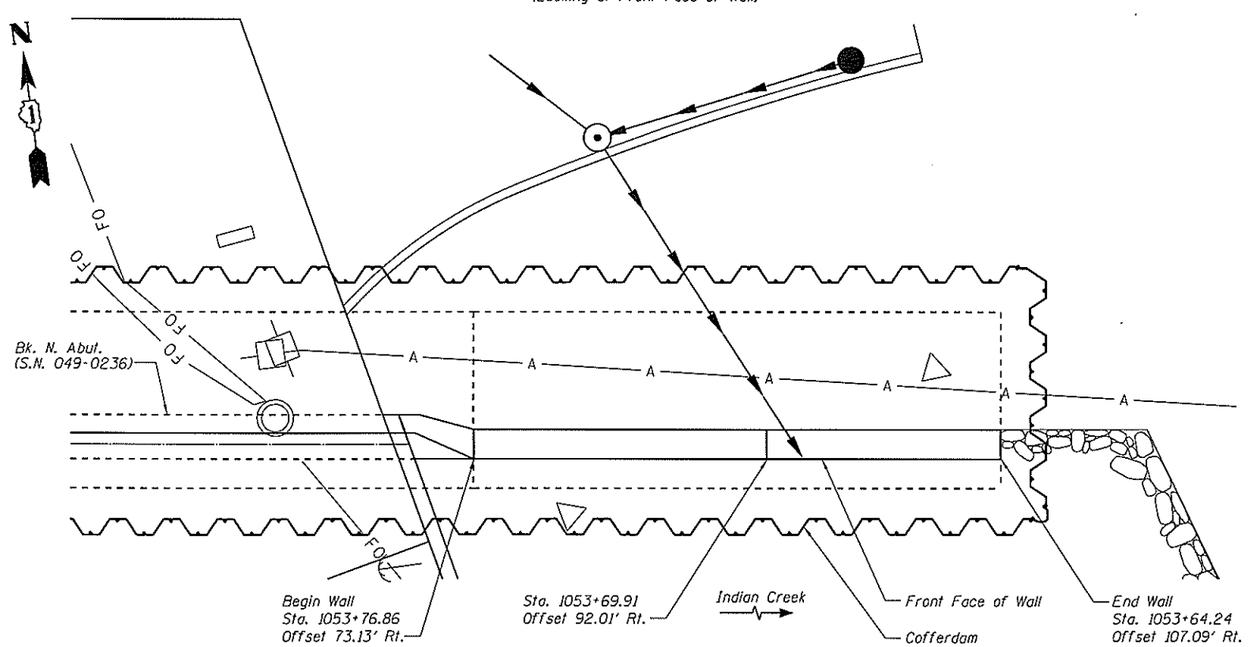

PLAN

(Wall offsets are measured from the ℄ US Rte. 45/IL Rte. 21 to Front Face of Wall)

NORTHEAST WINGWALL DETAILS
US RTE. 45/IL RTE. 21 OVER INDIAN CREEK
F.A.P. RTE. 330 - SEC. 49-Y
LAKE COUNTY
STATION 1053+52.47
STRUCTURE NO. 049-0236

5/18/2018 3:39:34 PM
0490236-D162C16-TSL-005.dgn

Stanley Consultants INC.

USER NAME =	DESIGNED - CSP	REVISED -	
	CHECKED - DSE	REVISED -	
PLOT SCALE =	DRAWN - RTT	REVISED -	
PLOT DATE =	CHECKED - CSP	REVISED -	

STATE OF ILLINOIS
DEPARTMENT OF TRANSPORTATION

SHEET 5 OF 6 SHEETS

F.A.P. RTE.	SECTION	COUNTY	TOTAL SHEETS	SHEET NO.
330	49-Y	LAKE		
		CONTRACT NO. 62C16		
		ILLINOIS FED. AID PROJECT		

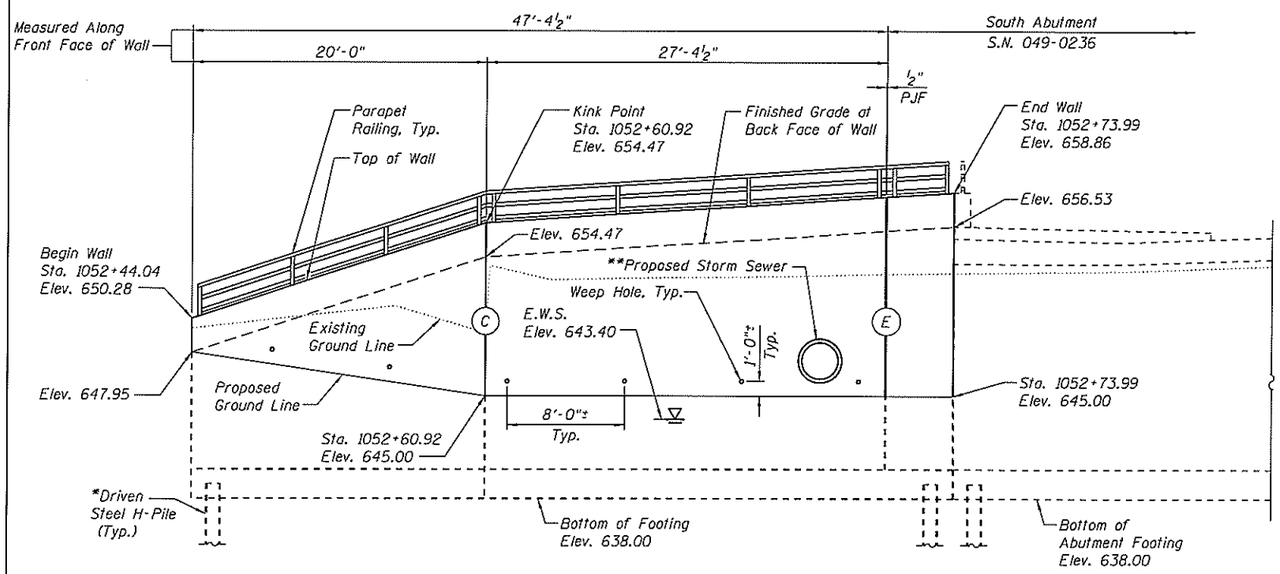

* Pile Section, Spacing, and Tip Elevation to be determined during Final Design.

** Size and Location to be determined during Final Design.

SOUTHEAST WINGWALL ELEVATION

(Looking at Front Face of Wall)

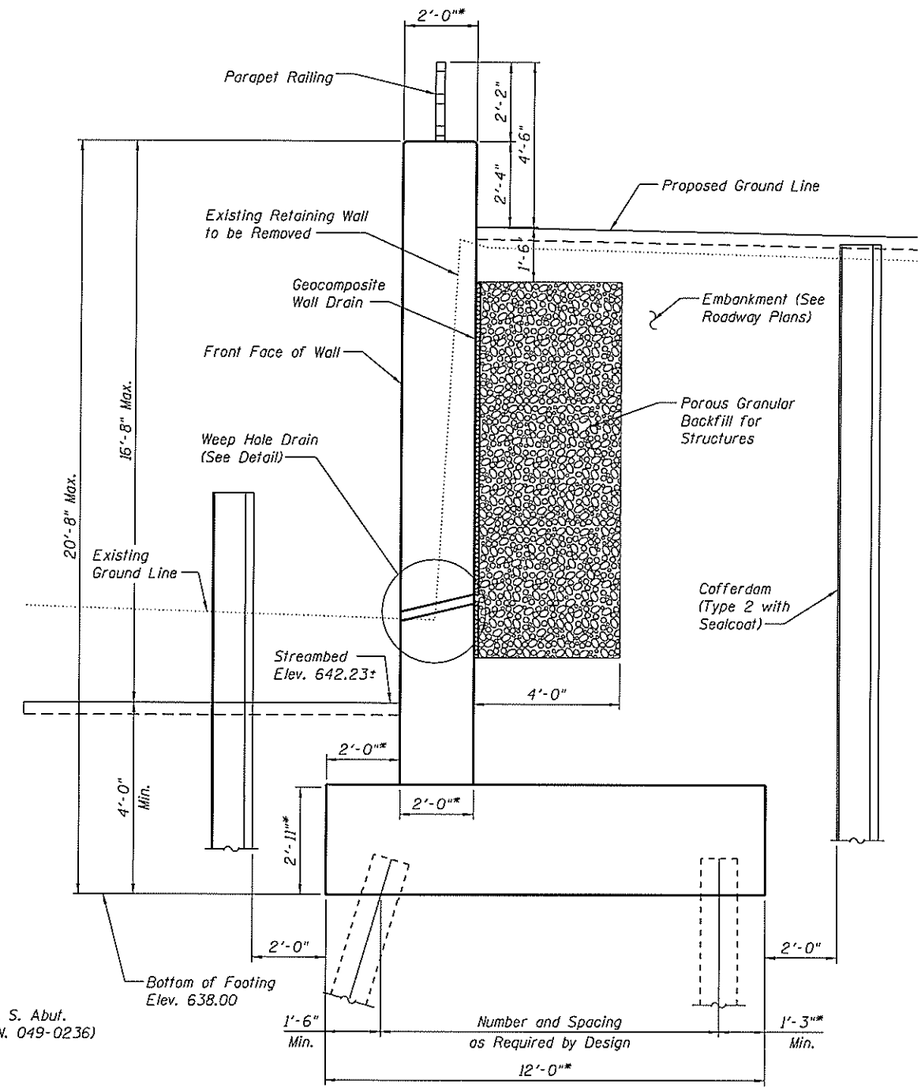

TYPICAL SECTION THRU RETAINING WALL

(Looking Downstream)

*Subject to Refinement during Final Design

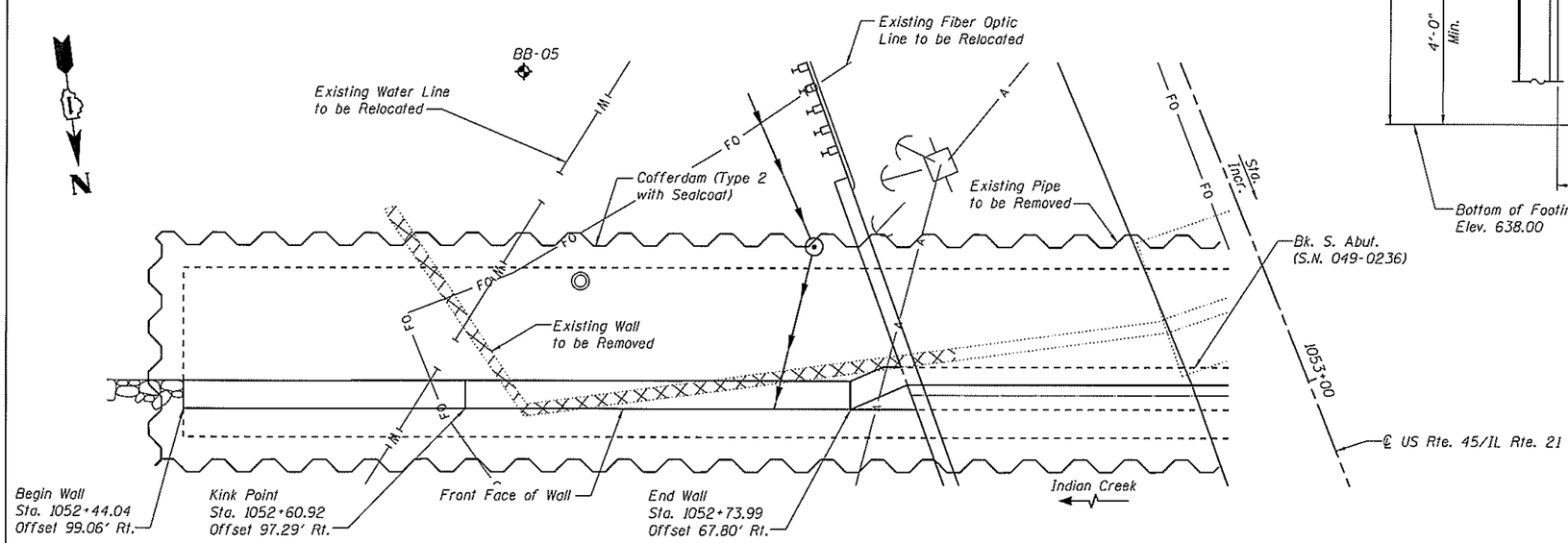

PLAN

(Wall offsets are measured from the ℄ US Rte. 45/IL Rte. 21 to Front Face of Wall)

SOUTHEAST WINGWALL DETAILS
US RTE. 45/IL RTE. 21 OVER INDIAN CREEK
F.A.P. RTE. 330 - SEC. 49-Y
LAKE COUNTY
STATION 1053+52.47
STRUCTURE NO. 049-0236

5/18/2018 3:39:41 PM
0490236-D162C16-TSL-006.dgn

Stanley Consultants INC.

USER NAME =	DESIGNED - CSP	REVISED -	
	CHECKED - DSE	REVISED -	
PLOT SCALE =	DRAWN - RTT	REVISED -	
PLOT DATE =	CHECKED - CSP	REVISED -	

STATE OF ILLINOIS
DEPARTMENT OF TRANSPORTATION

SHEET 6 OF 6 SHEETS

F.A.P. RTE.	SECTION	COUNTY	TOTAL SHEETS	SHEET NO.
330	49-Y	LAKE		
		CONTRACT NO. 62C16		
		ILLINOIS FED. AID PROJECT		