Benchmark: North bolt of fire hydrant between Railroad and "Mobil" Gas Station, Station 4138+51, Offset 47' Lt., Elev. = 692.91
Existing Structure: None
Proposed Structure: Driven Sheet Pile wall with tiebacks and moment slab. Stage Construction will be utilized to accomodate traffic. Wall to be constructed during Stage II.

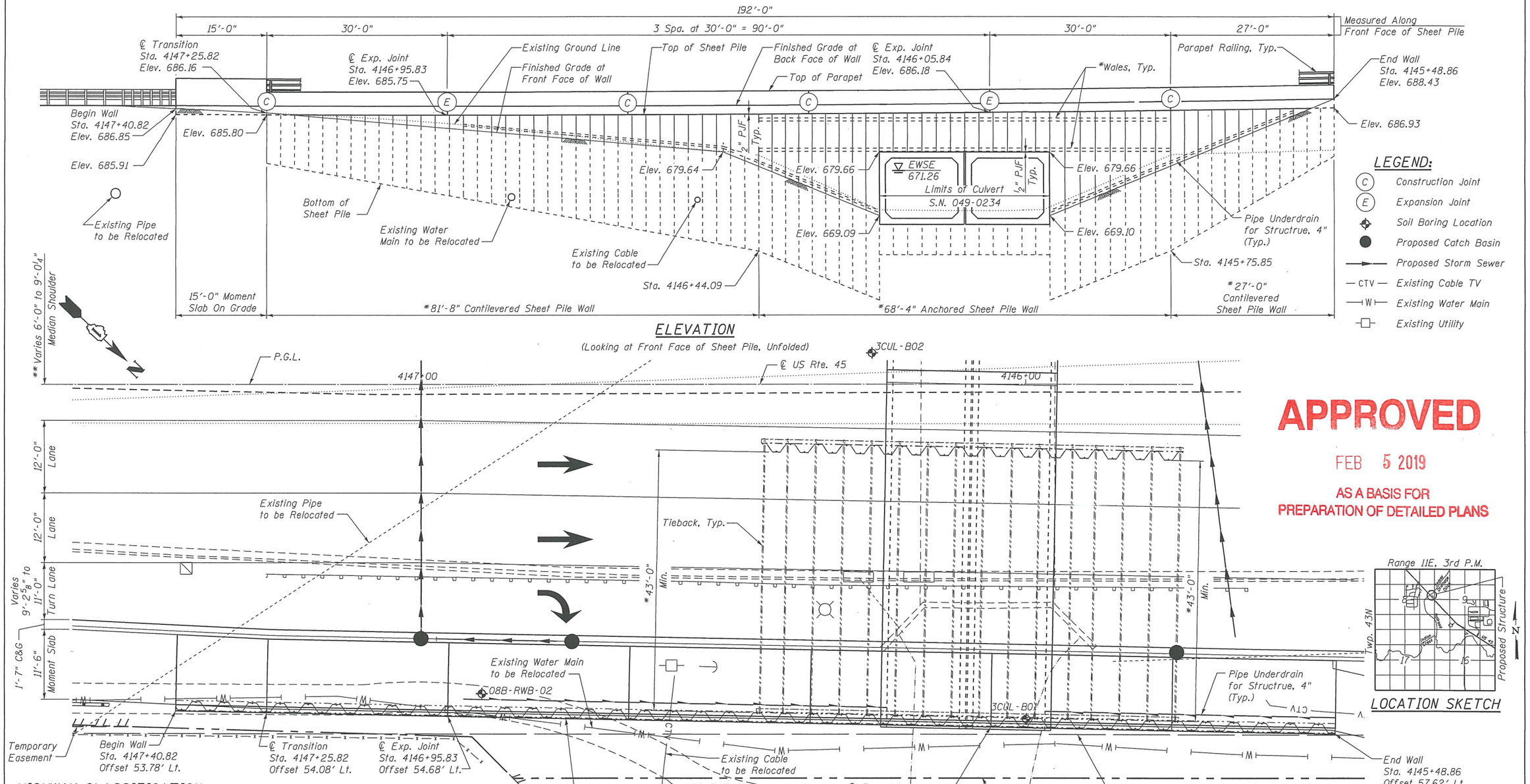

APPROVED
FEB 5 2019
AS A BASIS FOR PREPARATION OF DETAILED PLANS

HIGHWAY CLASSIFICATION

F.A.U. Rte. 3502 - US Rte. 45
Functional Class: Minor Arterial (Urban)
ADT: 19,100 (2016); 24,900 (2030)
ADTT: 6.5% (2016)
DHV: 2690 (2030) (Two-Way)
Design Speed: 45 m.p.h.
Posted Speed: 45 m.p.h.
Directional Distribution 50:50
Two-Way Traffic

DESIGN SPECIFICATIONS

2017 AASHTO LRFD Bridge Design Specifications
8th Edition

DESIGN STRESSES

FIELD UNITS

f'c = 3,500 psi
fy = 60,000 psi (Reinforcement)
fy = 50,000 psi (Sheet Pile)

PLAN

(Wall offsets are measured from the ℄ US Rte. 45 to Front Face of Sheet Pile)

*Tip Elevations, Wale Elevations, Section Modulus, and Tiebacks to be Determind During Final Design.

**Varies Along Wall Limits, Sta. 4145+48.86 to 4147+40.82.

GENERAL PLAN AND ELEVATION
US ROUTE 45
F.A.U. RTE. 3502 - SEC. 49-Y
LAKE COUNTY
STATION 4145+48.86 - 4147+40.82
STRUCTURE NO. 049-0616

1/25/2019 8:18:05 AM
0490616-D160N84-TSL-001.dgn

Stanley Consultants INC.

USER NAME =	DESIGNED - PS	REVISED -	
	CHECKED - CSP	REVISED -	
PLOT SCALE =	DRAWN - RTT	REVISED -	
PLOT DATE =	CHECKED -	REVISED -	

STATE OF ILLINOIS
DEPARTMENT OF TRANSPORTATION

SHEET 1 OF 3 SHEETS

F.A.U. RTE.	SECTION	COUNTY	TOTAL SHEETS	SHEET NO.
3502	49-Y	LAKE		
		CONTRACT NO. 60N84		
		ILLINOIS FED. AID PROJECT		

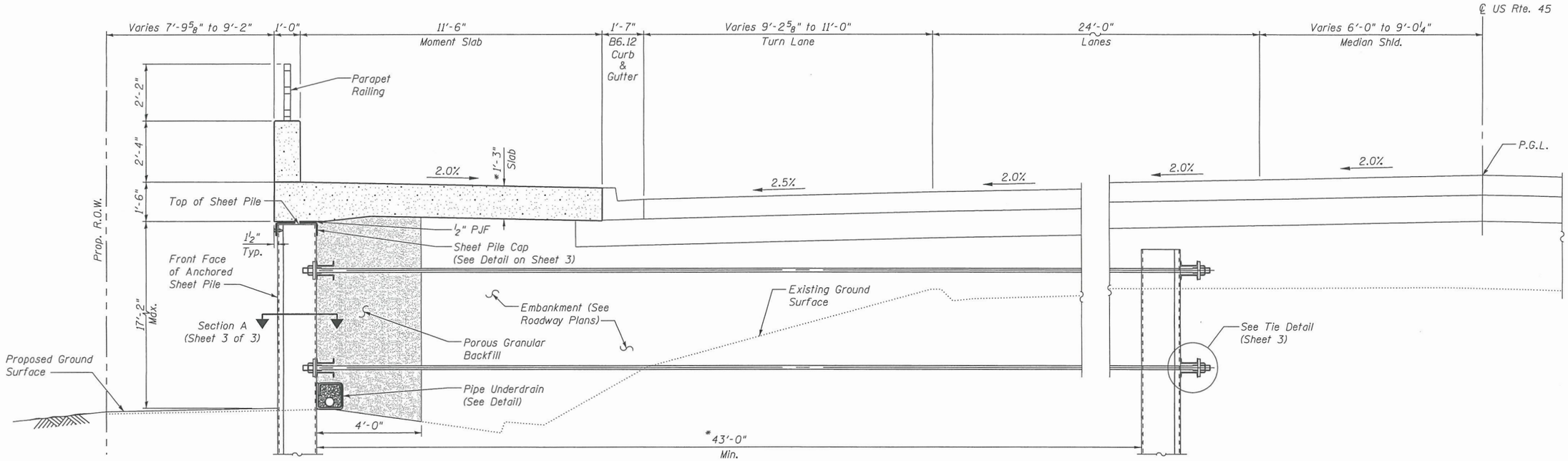

TYPICAL SECTION THRU ANCHORED SHEET PILE

*Subject to Refinement during Final Design

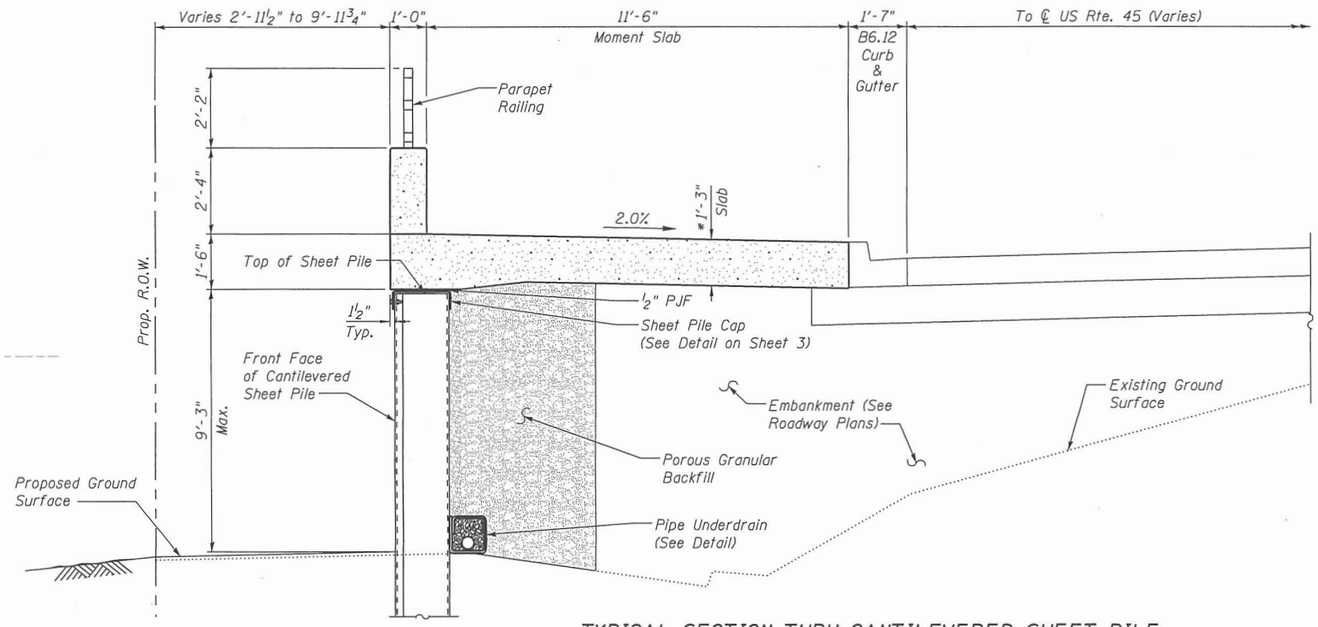

TYPICAL SECTION THRU CANTILEVERED SHEET PILE

*Subject to Refinement during Final Design

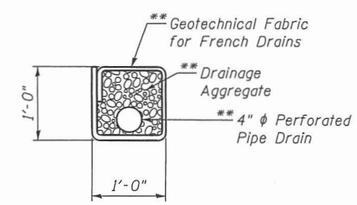

**Included in the cost of "Pipe Underdrains for Structures"

PIPE UNDERDRAIN DETAIL

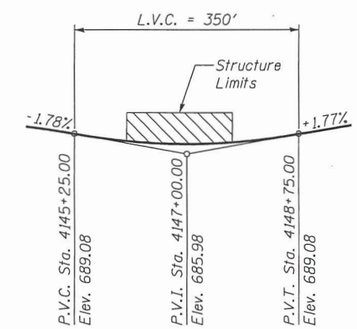

PROFILE GRADE

(Along ℄ US Rte. 45)

APPROVED

FEB 5 2019

AS A BASIS FOR
PREPARATION OF DETAILED PLANS

GENERAL DETAILS I
US ROUTE 45
F.A.U. RTE. 3502 - SEC. 49-Y
LAKE COUNTY
STATION 4145+48.86 - 4147+40.82
STRUCTURE NO. 049-0616

1/25/2019 8:18:13 AM
0490616-D160N84-TSL-002.dgn

Stanley Consultants INC.

USER NAME =	DESIGNED - PS	REVISED -	
	CHECKED - CSP	REVISED -	
PLOT SCALE =	DRAWN - RTT	REVISED -	
PLOT DATE =	CHECKED -	REVISED -	

STATE OF ILLINOIS
DEPARTMENT OF TRANSPORTATION

SHEET 2 OF 3 SHEETS

F.A.U. RTE.	SECTION	COUNTY	TOTAL SHEETS	SHEET NO.
3502	49-Y	LAKE		
		CONTRACT NO. 60N84		
		ILLINOIS FED. AID PROJECT		

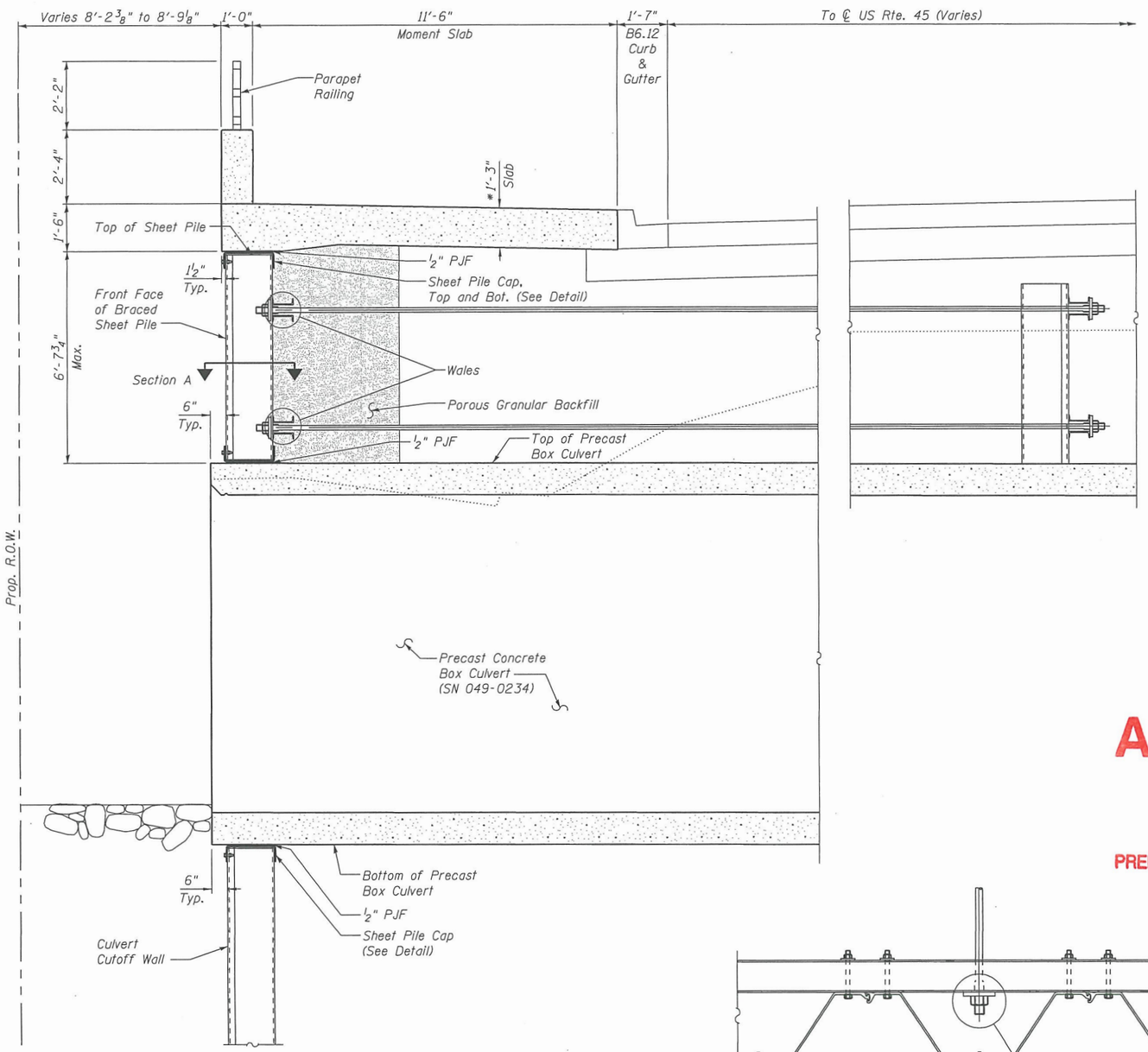

TYPICAL SECTION THRU CULVERT

*Subject to Refinement during Final Design

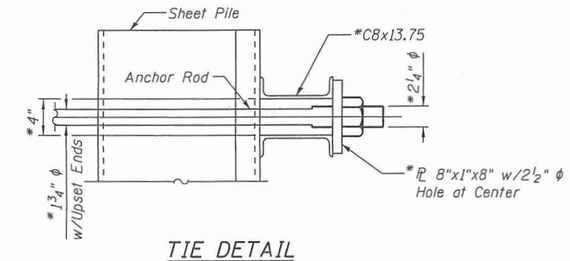

TIE DETAIL

*Subject to Refinement during Final Design

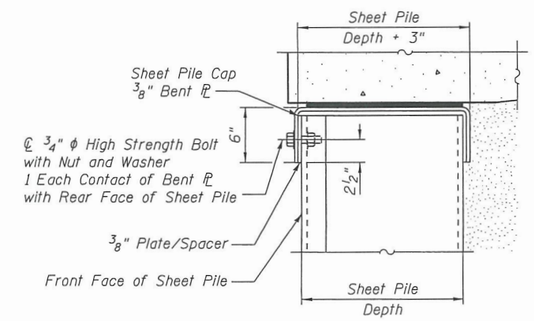

SHEET PILE CAP DETAIL

APPROVED

FEB 5 2019

AS A BASIS FOR PREPARATION OF DETAILED PLANS

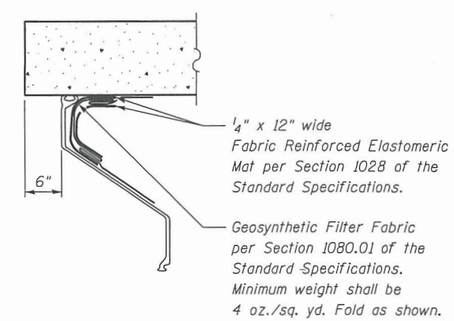

VERTICAL FACES OF CULVERT DETAIL

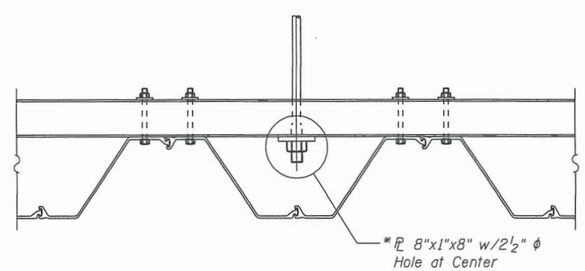

SECTION A

*Subject to Refinement during Final Design

GENERAL DETAILS II
US ROUTE 45
F.A.U. RTE. 3502 - SEC. 49-Y
LAKE COUNTY
STATION 4145+48.86 - 4147+40.82
STRUCTURE NO. 049-0616

1/25/2019 8:18:20 AM
0490616-D160N84-TSL-003.dgn

Stanley Consultants INC.

USER NAME =	DESIGNED - PS	REVISED -	
	CHECKED - CSP	REVISED -	
PLOT SCALE =	DRAWN - RTT	REVISED -	
PLOT DATE =	CHECKED -	REVISED -	

STATE OF ILLINOIS
DEPARTMENT OF TRANSPORTATION

SHEET 3 OF 3 SHEETS

F.A.U. RTE.	SECTION	COUNTY	TOTAL SHEETS	SHEET NO.
3502	49-Y	LAKE		
		CONTRACT NO. 60N84		
		ILLINOIS FED. AID PROJECT		