Bench Mark: BM #201 - Railroad Spike in PP at NE corner of SN 051-0006 Elev. 428.61

Existing Structure: S.N. 051-0006 was originally built in 1922 as S.B.I. Route 1, Section 16. In 1969 the center span truss was replaced with two spans of PPC deck beams and one new spread footing supported pier was constructed. In 1970 the first and third spans were each replaced with two spans of PPC deck beams, one spread footing supported pier and one pile supported footing pier. The existing six span structure consists of simple span PPC deck beams supported on two closed abutments, three solid wall piers on pile supported footings, and two spread footing supported piers. The structure is 457'-4" Bk. to Bk. abutments and 33'-0" Out to Out of deck. Structure to be removed and replaced. Traffic will be detoured.

Salvage - None.

Note:
Design scour elevations based on potential thalweg future movement.

DESIGN SCOUR ELEVATION TABLE

	Design Scour Elevations (ft.)			
	S. Abut.	Pier 1	Pier 2	N. Abut.
0100	426.44	392.02	389.09	426.87
0200	426.44	391.90	388.97	426.87

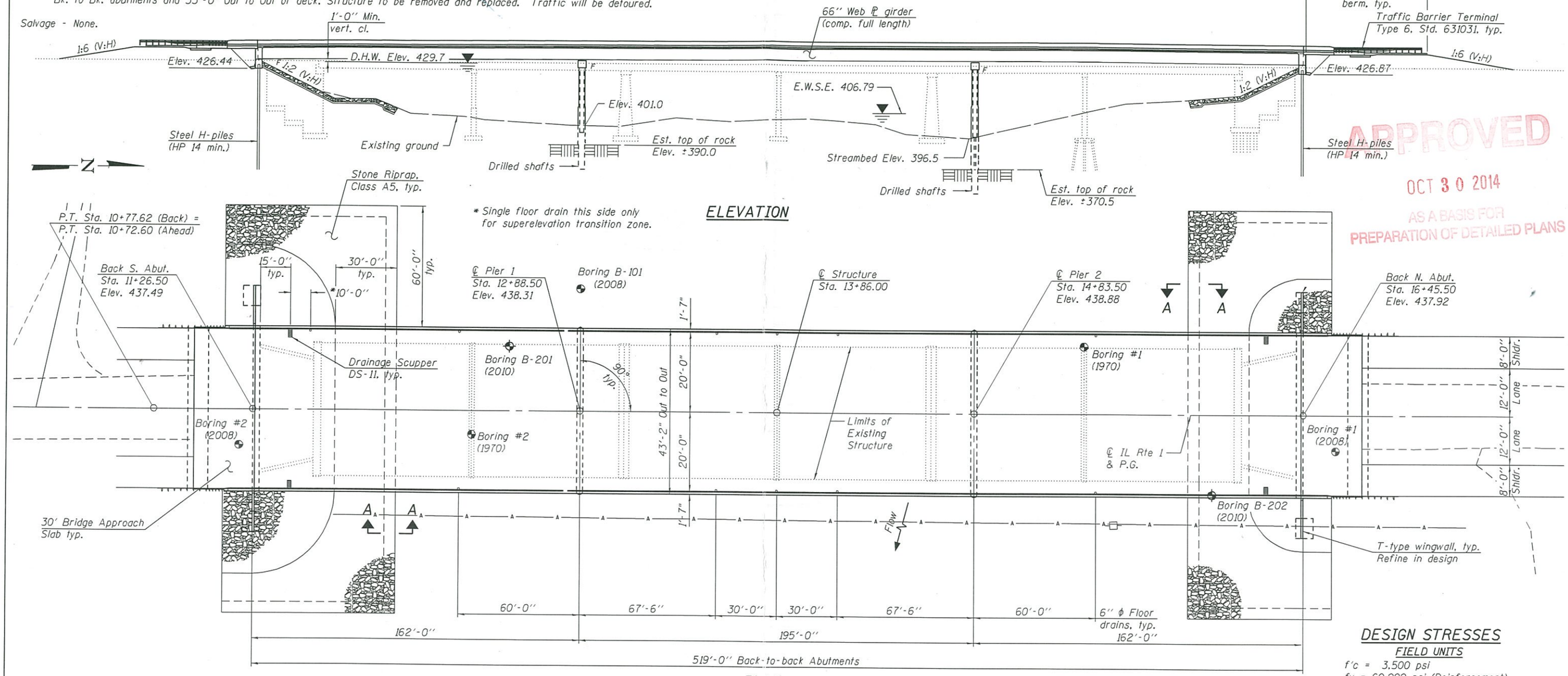

PLAN

APPROVED
OCT 30 2014
AS A BASIS FOR PREPARATION OF DETAILED PLANS

DESIGN STRESSES

FIELD UNITS

f'c = 3,500 psi
fy = 60,000 psi (Reinforcement)
fy = 50,000 psi (M270 Grade 50)

SEISMIC DATA

Seismic Performance Zone (SPZ) = 2
Design Spectral Acceleration at 1.0 sec. (S_{D1}) = 0.160g
Design Spectral Acceleration at 0.2 sec. (S_{DS}) = 0.406g
Soil Site Class = C

WATERWAY INFORMATION

Drainage Area = 2330 sq. mi.

Existing overtopping Elev. 429.68 @ Sta. 19+00
Proposed overtopping Elev. 429.82 @ Sta. 27+00

Flood Event	Freq. Yr.	Q C.F.S.	Opening Sq. Ft. Exist.	Opening Sq. Ft. Prop.	Nat. H.W.E.	Head - Ft. Exist.	Head - Ft. Prop.	Headwater El. Exist.	Headwater El. Prop.
	10	21261	8645	8937	426.7	0.1	0.1	426.8	426.8
Design/Overtop Exist.	50	30415	8653	10384	429.7	0.1	0.1	429.8	429.8
Overtop Proposed	55	30800	-	10433	429.8	-	0.1	-	429.9
Base	100	33337	8653	11016	431.0	0.2	0.2	431.2	431.2
Scour Design Check	200	36543	8653	11198	431.3	0.3	0.2	431.6	431.5
Max. Calc.	500	40550	8653	11390	431.6	0.3	0.2	431.9	431.8

10 Year velocity through existing bridge = 2.5 ft./sec.
10 Year velocity through proposed bridge = 2.4 ft./sec.

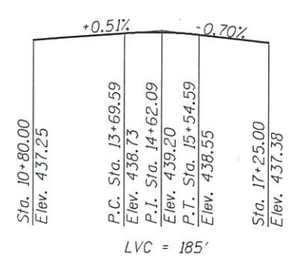

PROFILE GRADE
(along ℄ roadway)

DESIGN SPECIFICATIONS

2012 AASHTO LRFD Bridge Design Specifications, 6th Edition with 2013 Interims

LOADING HL-93

Allow 50#/sq. ft. for future wearing surface.

HIGHWAY CLASSIFICATION

F.A.P. Rte. 332 IL. Rte. 1
Functional Class: Other Principal Arterial
ADT: 4150 (2007); 5753 (2030)
ADTT: 398 (2007); 552 (2030)
DHV: 633 (2030)
Design Speed: 60 m.p.h.
Posted Speed: 55 m.p.h.
2-Way Traffic
Directional Distribution: 50:50

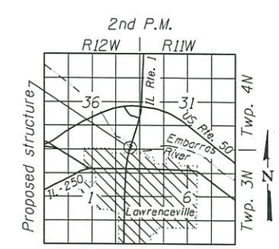

LOCATION SKETCH

GENERAL PLAN & ELEVATION
ILLINOIS ROUTE 1 OVER EMBARRAS RIVER
F.A.P. RT. 332 SEC. (16 BR) B-1
LAWRENCE COUNTY
STATION 13+86.00
STRUCTURE NO. 051-0064

DESIGNED -	RICHARD J. CHAPUT
CHECKED -	TIM A. CRAVEN
DRAWN -	BWP / MICHAEL B. MOSSMAN
CHECKED -	R.J.C. / M.K.C.

OCTOBER 20, 2014

STATE OF ILLINOIS
DEPARTMENT OF TRANSPORTATION

SHEET NO. 1 OF 2 SHEETS

F.A.P. RTE.	SECTION	COUNTY	TOTAL SHEETS	SHEET NO.
332	(16 BR) B-1			

CONTRACT NO. 74180

ILLINOIS FED. AID PROJECT

** The cross slope of the southbound lane on the south approach slab varies from +0.77% at Sta. 10+97.5 to -0.58% at Sta. 11+26.50
The cross slope of the southbound lane at the south end of the bridge varies from -0.58% at Sta. 11+26.50 to -1.50% at Sta. 11+48.00

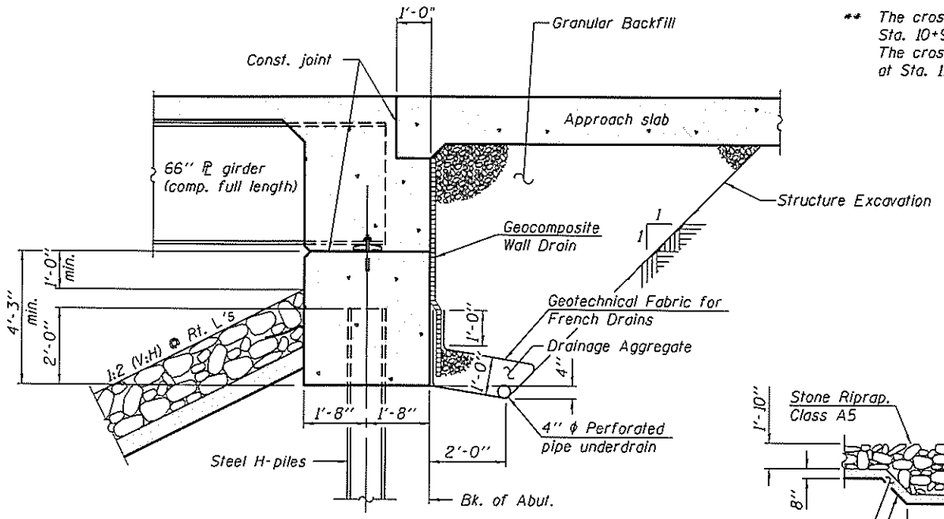

SECTION THRU INTEGRAL ABUTMENT
(Horiz. dim. @ Rt. L's)

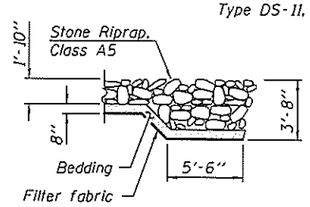

SECTION A-A

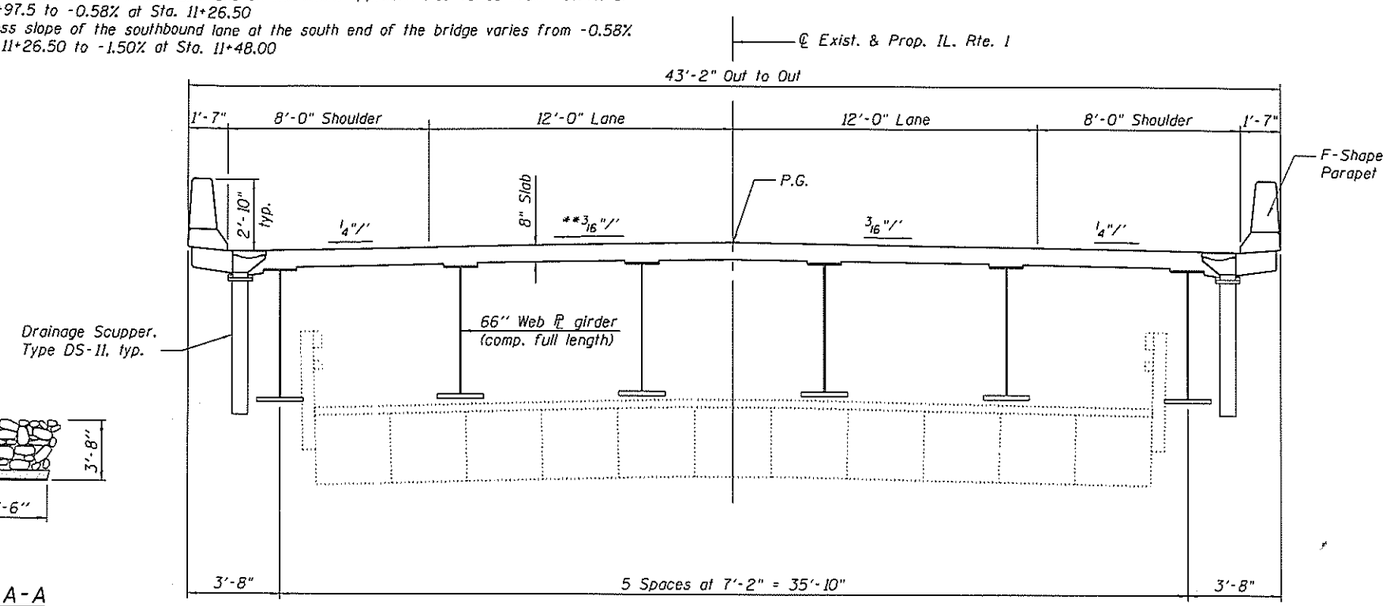

CROSS SECTION
(Looking North)

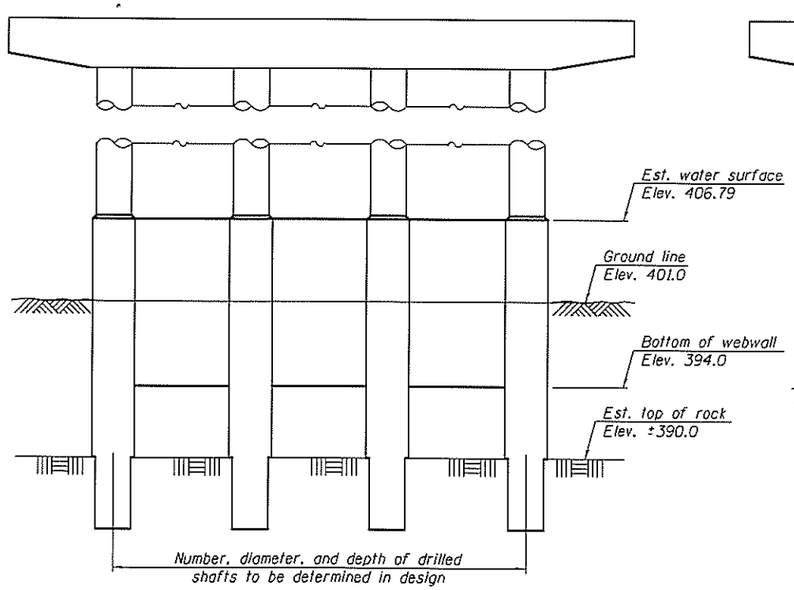

PIER 1 SKETCH

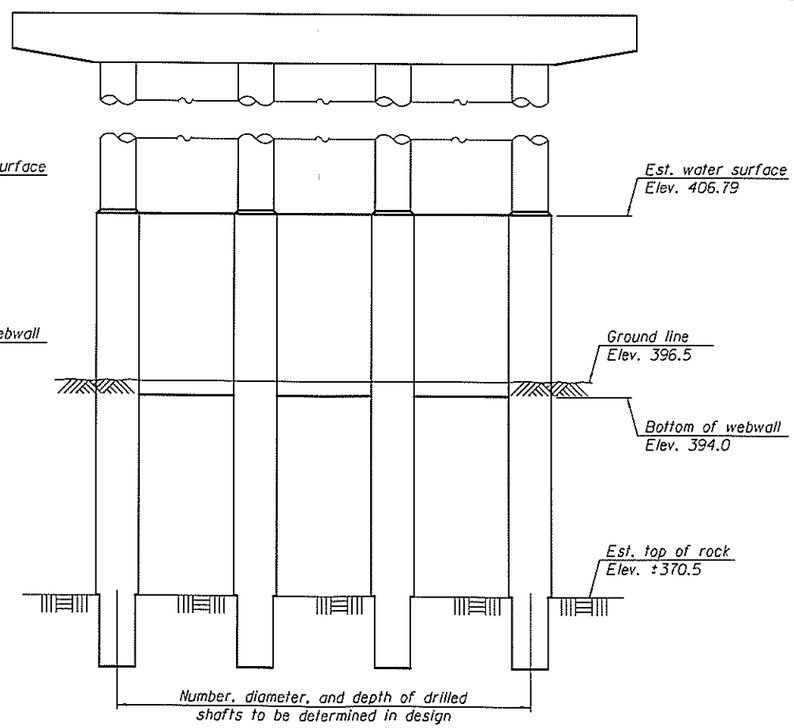

PIER 2 SKETCH

Note:
Piers to be designed for significant debris according to LRFD Section C3.7.3.1.

DETAILS
ILLINOIS ROUTE 1 OVER EMBARRAS RIVER
F.A.P. RT. 332 SEC. (16 BR) B-1
LAWRENCE COUNTY
STATION 13+86.00
STRUCTURE NO. 051-0064

DESIGNED	-	RICHARD J. CHAPUT
CHECKED	-	TIM A. CRAVEN
DRAWN	-	BWP / MICHAEL B. MOSSMAN
CHECKED	-	R.J.C. / M.K.C.

OCTOBER 20, 2014

STATE OF ILLINOIS
DEPARTMENT OF TRANSPORTATION

SHEET NO. 2 OF 2 SHEETS

F.A.P. RTE.	SECTION	COUNTY	TOTAL SHEETS	SHEET NO.
332	(16 BR) B-1	LAWRENCE	___	___
		CONTRACT NO. 74180		
		ILLINOIS FED. AID PROJECT		