APPROVED
MAR 14 2016
AS A BASIS FOR PREPARATION OF DETAILED PLANS

Benchmark:
Chiseled "□" on Center of South Headwall of cross road culvert
Sta. 3670+30, 78' Rt., Elev. 445.115.

No existing structure.

Adjacent structure to SN 051-0066.

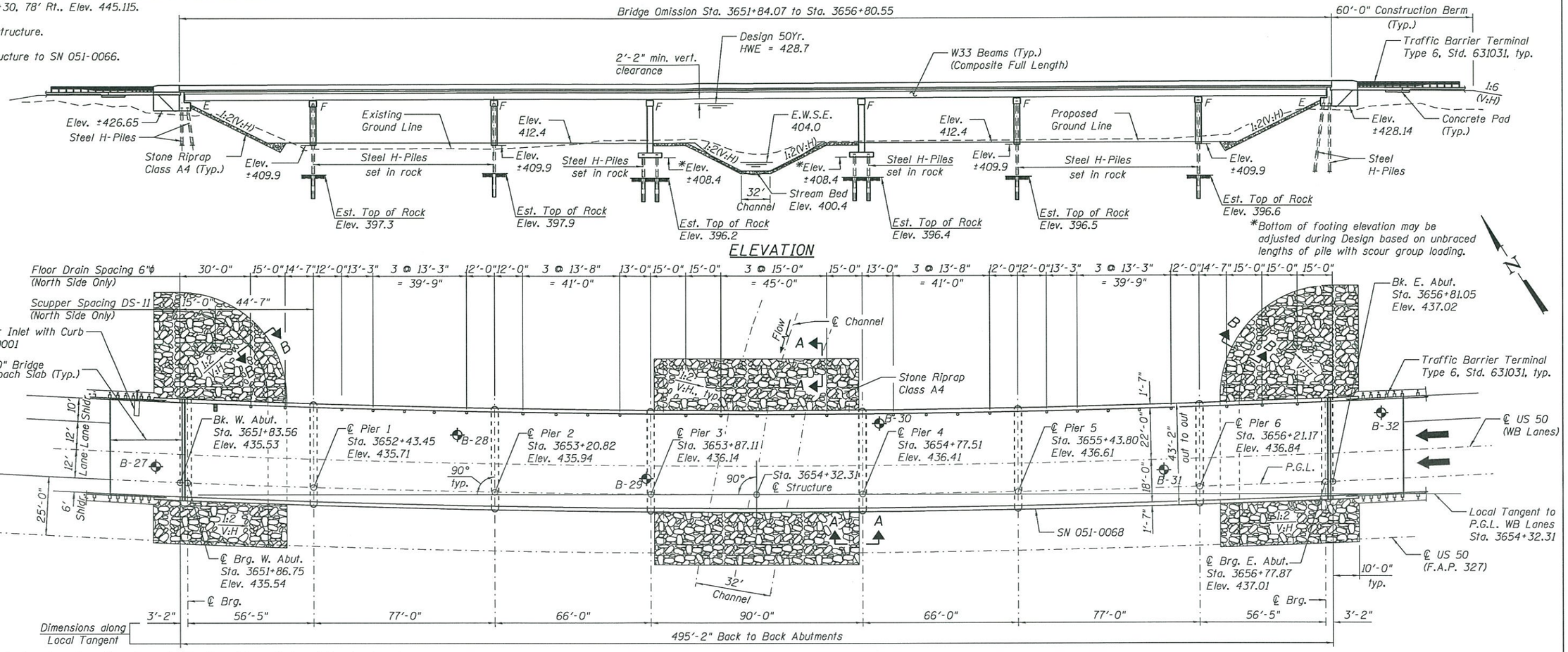

PLAN

Notes:
The embankment configuration shown shall be the minimum that must be placed and compacted prior to construction of the abutments. The embankment shall be in place long enough prior to abutment construction such that 0.4 inches or less of settlement remains; otherwise downdrag at the abutment piles will need to be accounted for as per the SGR.
All horizontal dimensions measured radially unless noted otherwise.
Survey data and curve data for SN 051-0068 are different than adjacent SN 051-0066.

WATERWAY INFORMATION

Drainage Area = 2,350.6 Sq. Mi.
Existing Low Grade Elev. = 432.45 @ Sta. 3646+98
Proposed Low Grade Elev. = 434.07 @ Sta. 3646+98

Flood	Freq. Yr.		Q C.F.S.	Opening Sq. Ft. Exist.	Opening Sq. Ft. Prop.	Nat. H.W.E.	Head - Ft. Exist.	Head - Ft. Prop.	Headwater El. Exist.	Headwater El. Prop.
	10	SN 051-0063	20,466							
		SN 051-0066	19,863	5,973	6,057	425.6	0.6	0.6	426.1	426.2
		Total	40,329							
Design	50	SN 051-0063	31,775							
		SN 051-0066	28,091	7,383	7,475	428.7	0.8	0.9	429.5	429.6
		Total	59,866							
Base	100	SN 051-0063	39,647							
		SN 051-0066	28,481	7,881	8,127	430.1	1.7	1.8	431.9	431.9
		Total	68,128							
Overtopping	200	SN 051-0063	42,689							
		SN 051-0066	34,188	7,881	8,729	431.4	1.8	1.8	433.2	433.2
		Total	76,877							
Max	500	SN 051-0063	45,887							
		SN 051-0066	42,047	7,881	9,007	432.8	1.8	2.2	434.7	435.0
		Total	87,934							

10 Year Velocity through Existing Structure = 3.5 ft/s
10 Year Velocity through Proposed Structure = 3.2 ft/s

HIGHWAY CLASSIFICATION

F.A.P. 327 (US 50)
Functional Class: Other Principal Arterial
ADT: 2,400 (2013), 2,200 (2032)
ADTT: 408 (2013), 374 (2032)
DHV: 293 (2012), 386 (2032)
Design Speed: 70 m.p.h.
Posted Speed: 55 m.p.h.
One Way Traffic

SEISMIC DATA

Seismic Performance Zone (SPZ) = 2
Design Spectral Acceleration at 1.0 sec. (S_{D1}) = 0.159g
Design Spectral Acceleration at 0.2 sec. (S_{DS}) = 0.403g
Soil Site Class = C

DESIGN STRESSES

FIELD UNITS
f'c = 3,500 p.s.i.
f'c = 4,000 p.s.i. (Superstructure Concrete)
fy = 60,000 p.s.i. (Reinforcement)
fy = 50,000 p.s.i. (Structural Steel)
(AASHTO M270 Grade 50)

DESIGN SPECIFICATIONS

2014 AASHTO LRFD
Bridge Design Specifications, 7th Ed.
with 2015 Interims

LOADING HL-93

Allow 50#/sq. ft. for future wearing surface.

CURVE DATA

(US 50)
Δ = 27°-44'-41"
D = 0°-59'-57"
R = 5,734.22'
T = 1,416.14'
L = 2,776.72'
E = 172.28'
S.E. = 3.40%
P.C. Sta. = 3647+05.78
P.T. Sta. = 3674+82.50
P.I. Sta. = 3661+21.92

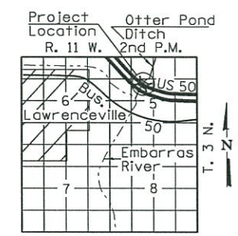

LOCATION SKETCH

DESIGN SCOUR ELEVATION TABLE

Event / Limit State	Design Scour Elevations (ft.) W. Abut.	Pier 1	Pier 2	Pier 3	Pier 4	Pier 5	Pier 6	E. Abut.	Item 113
Q100	426.65	392.40	393.50	392.00	392.20	392.20	392.40	428.14	5
Q200	426.65	392.30	393.40	391.90	392.10	392.10	392.30	428.14	
Design	426.65	392.40	393.50	392.00	392.20	392.20	392.40	428.14	
Check	426.65	392.30	393.40	391.90	392.10	392.10	392.30	428.14	

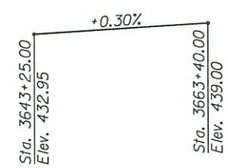

PROFILE GRADE
(along inside shoulder)

GENERAL PLAN & ELEVATION
US 50 (WB) OVER OTTER POND DITCH
F.A.P. RTE. 327 - SEC. (51-23B-2)B-1
LAWRENCE COUNTY
STATION 3654+32.31
STRUCTURE NO. 051-0068 (WB)

LIN ENGINEERING, LTD.
Consulting Engineers
Springfield, Illinois

USER NAME = Lin20.Nick	DESIGNED - SSK	REVISED -	
FILE NAME = ...\DGN Files\29651TSL-1(Otter).dgn	CHECKED - JRS	REVISED -	
	DRAWN - RMH	REVISED -	
PLOT DATE = 6/9/2015 9:13:06 AM	CHECKED - JRS	REVISED -	

STATE OF ILLINOIS
DEPARTMENT OF TRANSPORTATION

SHEET NO. 1 OF 2 SHEETS

F.A.P. RTE.	SECTION	COUNTY	TOTAL SHEETS	SHEET NO.
327	(51-23B-2)B-1	LAWRENCE		
		CONTRACT NO. •••••		
		ILLINOIS FED. AID PROJECT		

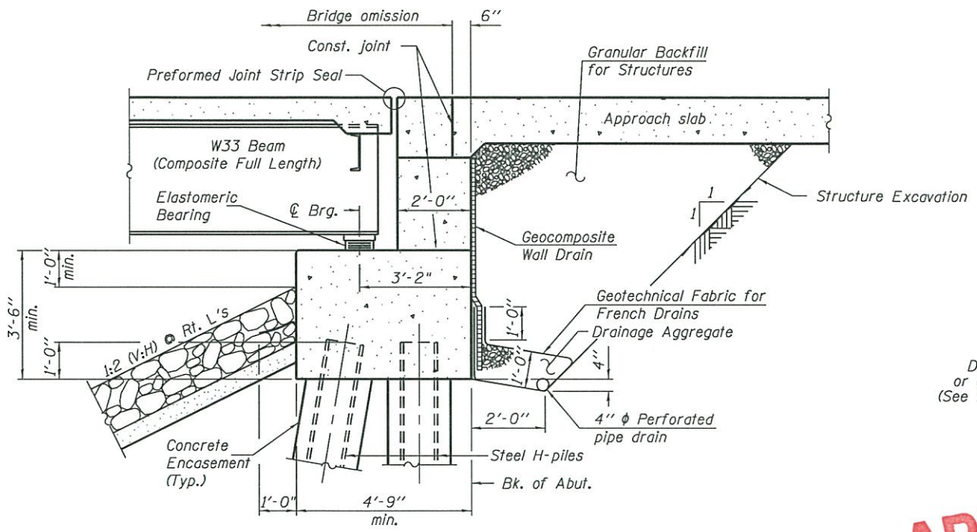

SECTION THRU PILE SUPPORTED STUB ABUTMENT

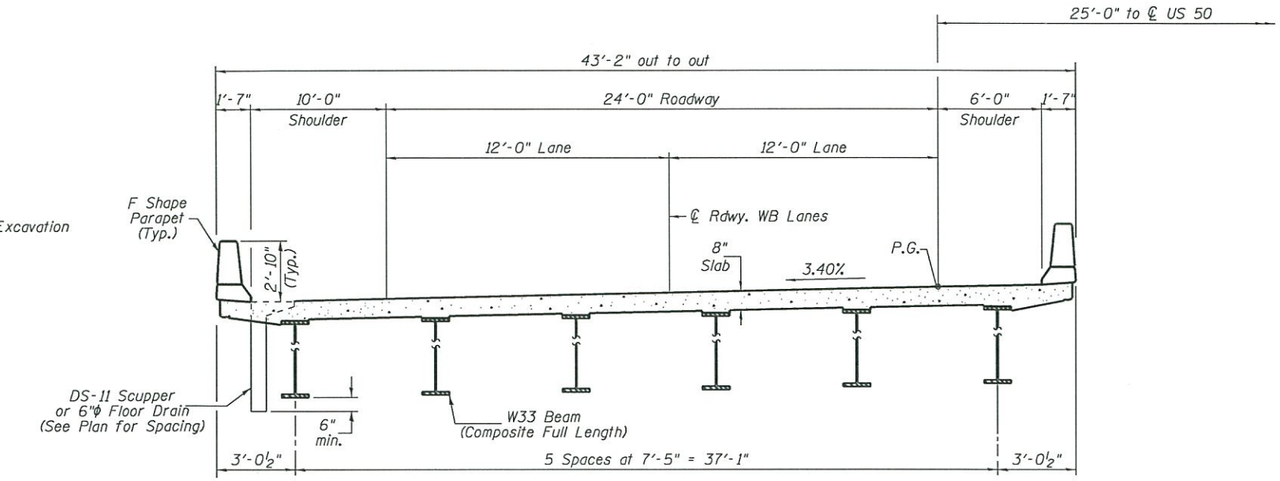

PROPOSED CROSS SECTION
WESTBOUND STRUCTURE
(Looking East)

All dimenstions measured radially unless noted otherwise.

APPROVED
MAR 14 2016
AS A BASIS FOR PREPARATION OF DETAILED PLANS

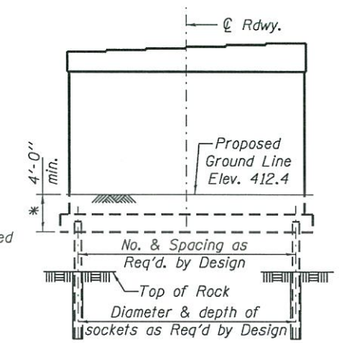

* Bottom of footing elevation may be adjusted during Design based on unbraced lengths of pile with scour group loading.

PIERS 3 & 4 SKETCH

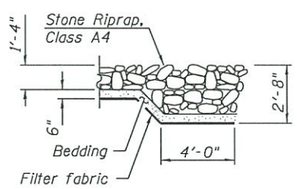

SECTION A-A

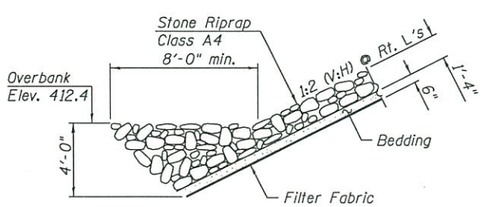

SECTION B-B

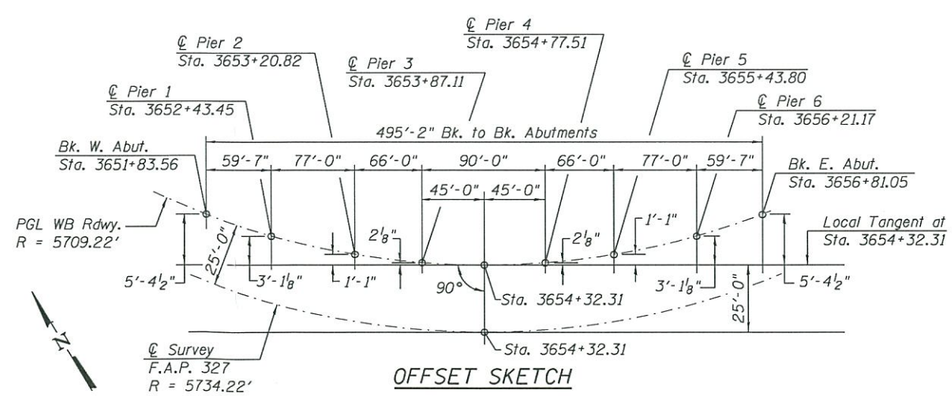

OFFSET SKETCH
WESTBOUND STRUCTURE

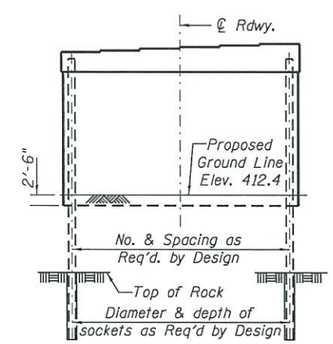

PIERS 1, 2, 5, & 6 SKETCH

GENERAL DETAILS
US 50 (WB) OVER OTTER POND DITCH
F.A.P. RTE. 327 - SEC. (51-23B-2)B-1
LAWRENCE COUNTY
STATION 3654+32.31
STRUCTURE NO. 051-0068 (WB)

LIN ENGINEERING, LTD. Consulting Engineers Springfield, Illinois	USER NAME = Lin20.Nick	DESIGNED - SSK	REVISED -
	FILE NAME = ...\DGN Files\29651SL-2(Otter).dgn	CHECKED - JRS	REVISED -
		DRAWN - RMH	REVISED -
	PLOT DATE = 6/9/2015 4:17:23 PM	CHECKED - JRS	REVISED -

STATE OF ILLINOIS
DEPARTMENT OF TRANSPORTATION

SHEET NO. 2 OF 2 SHEETS

F.A.P. RTE.	SECTION	COUNTY	TOTAL SHEETS	SHEET NO.
327	(51-23B-2)B-1	LAWRENCE		
		CONTRACT NO. •••••		
		ILLINOIS FED. AID PROJECT		