Benchmark: Chiseled square on Souteast corner of bridge hubguard of S.N. 051-0005; 15.4' Rt. Sta. 54+72.6
Elev. 431.29

Existing Structure: Structure No. 051-0005, a 22 span structure was built in 1923 as SBI Route 1, Section 16. The superstructure was replaced in 1964 and the three north end spans were filled in, reducing the number of spans to 19. The bridge is 819'-1½" back-to-back and 35'-8" out-to-out. The superstructure consists of a reinforced concrete deck on wide flange beams, supported by one closed and one open abutment and two-column piers on pile supported footings. The bridge is to be removed and replaced utilizing stage construction.

Salvage: None

## DESIGN SPECIFICATIONS

2017 AASHTO LRFD Bridge Design Specifications, 8th Edition

## DESIGN STRESSES

FIELD UNITS

f'c = 4,000 psi (Superstructure)
f'c = 3,500 psi (Substructure)
fy = 60,000 psi (Reinforcement)
fy = 50,000 psi (M270 Grade 50)

## HIGHWAY CLASSIFICATION

F.A.P. Rte. 332 - IL Rte. 1
Functional Class: Other Principal Arterial
ADT: 5400 (2020); 6600 (2040)
ADTT: 902 (2020); 1102 (2040)
DHV: 706 (2040)
Design Speed: 60 m.p.h.
Posted Speed: 55 m.p.h.
Two-Way Traffic
Directional Distribution: 50:50

## LOADING HL-93

Allow 50#/sq. ft. for future wearing surface.

## SEISMIC DATA

Seismic Performance Zone (SPZ) = 3
Design Spectral Acceleration at 1.0 sec. (SD1) = 0.328 g
Design Spectral Acceleration at 0.2 sec. (SDS) = 0.748 g
Soil Site Class = E

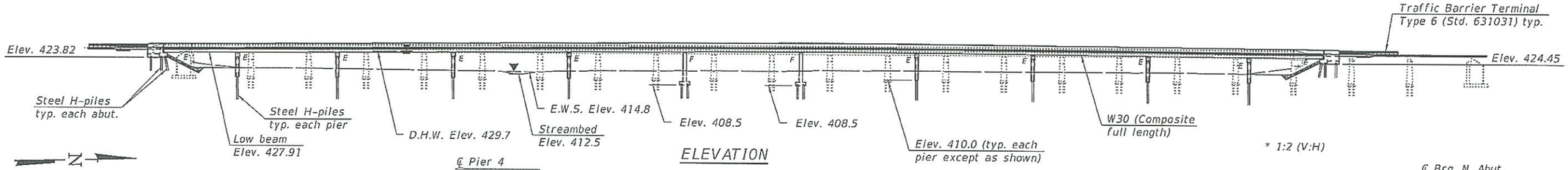


ELEVATION

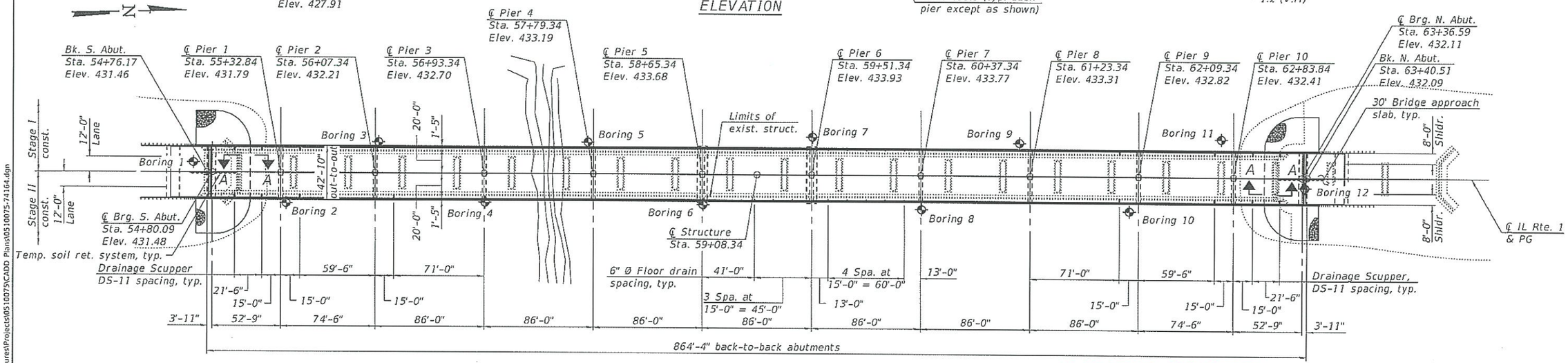


PLAN

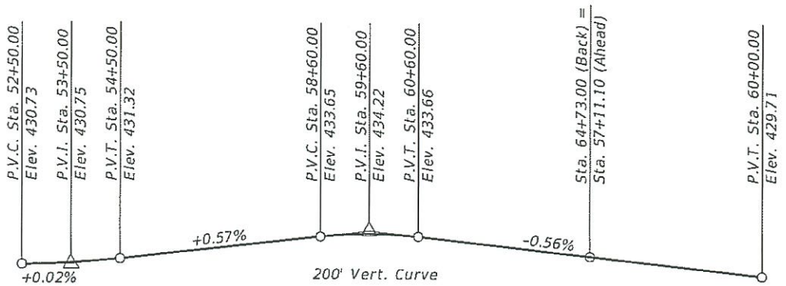


PROFILE GRADE
(Along ℄ IL Rte. 1)

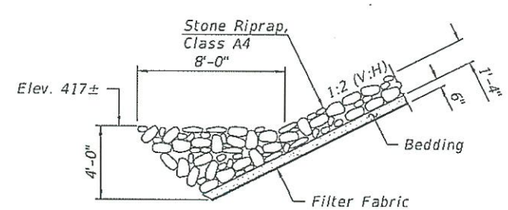


SECTION A-A

APPROVED

DEC 31 2018

AS A BASIS FOR
PREPARATION OF DETAILED PLANS

Note:
Up to ¼" may be ground off the bridge deck and the bridge approach slab.
The profile grade shows the final elevations after grinding.
All structural steel within 6 feet of an expansion joint shall be metalized or galvanized.

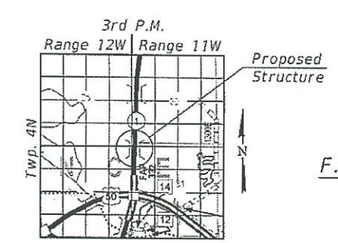


LOCATION SKETCH

GENERAL PLAN & ELEVATION
ILLINOIS ROUTE 1 OVER
EMBARRAS RIVER OVERFLOW
F.A.P. RTE. 332 - SEC. (16BR-1,BR-2)B-1
LAWRENCE COUNTY
STATION 59+08.34
STRUCTURE NO. 051-0075

| | |
|---|---|
| DESIGNED - | NICHOLAS R. BARNETT |
| CHECKED - | JUSTIN T. BELUE |
| DRAWN - | MICHAEL B. MOSSMAN |
| CHECKED - | N.R.B. / J.T.B. |

12/17/2018 4:19:18 PM

STATE OF ILLINOIS
DEPARTMENT OF TRANSPORTATION

SHEET 1 OF 2 SHEETS

| F.A.P. RTE. | SECTION | COUNTY | TOTAL SHEETS | SHEET NO. |
|---|---|---|---|---|
| 332 | (16BR-1,BR-2)B-1 | LAWRENCE | — | — |
| | | CONTRACT NO. 74164 | | |
| | ILLINOIS | FED. AID PROJECT | | |

MODEL: 0510075-74164-TSL-001
FILE NAME: pw:\\IL084EBIDINTEG.illinois.gov:PWIDOT\Documents\IDOT Offices\Bureau of Bridges and Structures\Projects\051075\051075\CADD Plans\0510075-74164.dgn

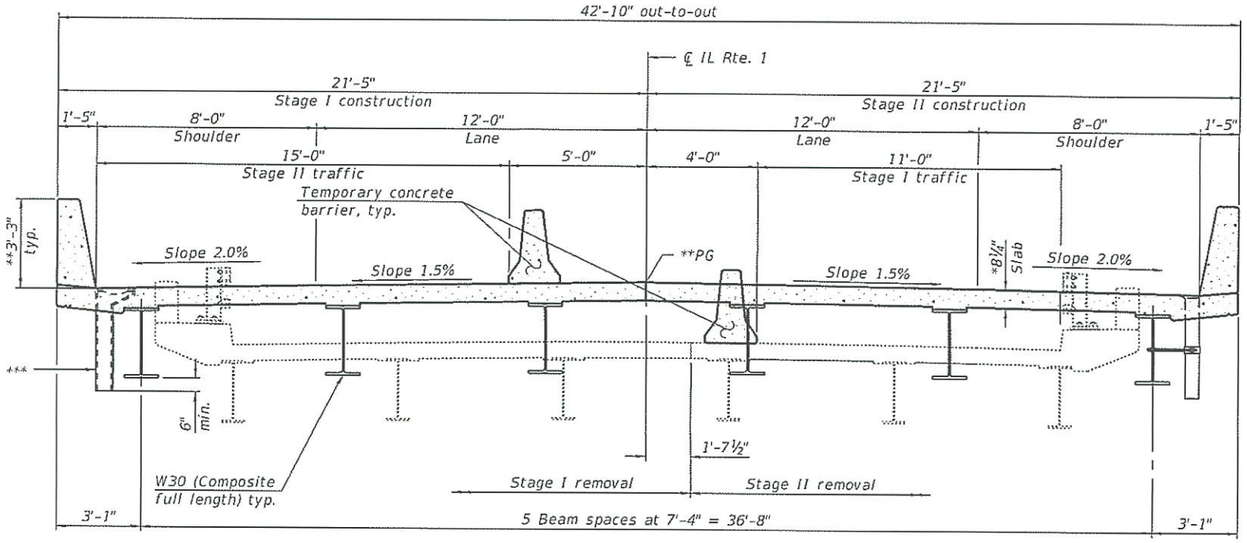


## CROSS SECTION
(Looking North)

* Prior to grinding.

** After grinding.

*** DS-11 drainage scupper or 6" Ø floor drain (See Plan for locations and spacing).

## WATERWAY INFORMATION

Drainage Area = 2,329.3 sq. mi.

Existing Overtopping Elev. 428.23 at Sta. 66+41
Proposed Overtopping Elev. 428.23 at Sta. 66+41

| Flood Event | | Discharge (cfs) | | Opening Ft² | | Nat. H.W.E. | Head - Ft. | | Headwater Elev. | |
|---|---|---|---|---|---|---|---|---|---|---|
| | | Exist. | Prop. | Exist. | Prop. | | Exist. | Prop. | Exist. | Prop. |
| 10 | SN 051-0063 | 20466 | 20466 | 7639 | 7639 | 426.5 | 0.2 | 0.2 | 426.7 | 426.7 |
| | SN 051-0075 | 12950 | 12860 | 7560 | 8349 | | | | | |
| | SN 051-0074 | 6913 | 7003 | 4045 | 4609 | | | | | |
| | Total | 40329 | 40329 | 19244 | 20597 | | | | | |
| 30 Overtopping | SN 051-0063 | 27365 | 27365 | 8450 | 8450 | 428.5 | 0.1 | 0.1 | 428.6 | 428.6 |
| | SN 051-0075 | 17240 | 17185 | 8555 | 9896 | | | | | |
| | SN 051-0074 | 8843 | 8898 | 4425 | 5232 | | | | | |
| | Total | 53448 | 53448 | 21430 | 23578 | | | | | |
| 50 | SN 051-0063 | 31775 | 31775 | 8933 | 8933 | 429.7 | 0.1 | 0.0 | 429.8 | 429.7 |
| | SN 051-0075 | 18512 | 18760 | 8555 | 10310 | | | | | |
| | SN 051-0074 | 9579 | 9331 | 4425 | 5232 | | | | | |
| | Total | 59866 | 59866 | 21913 | 24475 | | | | | |
| 100 | SN 051-0063 | 39647 | 39647 | 9899 | 9899 | 432.0 | 0.1 | 0.1 | 432.1 | 432.1 |
| | SN 051-0075 | 18858 | 19021 | 8555 | 10310 | | | | | |
| | SN 051-0074 | 9623 | 9460 | 4425 | 5232 | | | | | |
| | Total | 68128 | 68128 | 22879 | 25441 | | | | | |
| 200 | SN 051-0063 | 42689 | 42689 | 10488 | 10488 | 433.4 | 0.0 | 0.0 | 433.4 | 433.4 |
| | SN 051-0075 | 22598 | 22833 | 8555 | 10310 | | | | | |
| | SN 051-0074 | 11590 | 11355 | 4425 | 5232 | | | | | |
| | Total | 76877 | 76877 | 23468 | 26030 | | | | | |
| 500 | SN 051-0063 | 45887 | 45887 | 10681 | 10681 | 434.9 | 0.1 | 0.0 | 435.0 | 434.9 |
| | SN 051-0075 | 27792 | 28082 | 8555 | 10310 | | | | | |
| | SN 051-0074 | 14255 | 13965 | 4425 | 5232 | | | | | |
| | Total | 87934 | 87934 | 23661 | 26223 | | | | | |

## DESIGN SCOUR ELEVATION TABLE

| Event / Limit State | Design Scour Elevations (ft.) | | | | | | | | | | | | |
|---|---|---|---|---|---|---|---|---|---|---|---|---|---|
| | S. Abut. | Pier 1 | Pier 2 | Pier 3 | Pier 4 | Pier 5 | Pier 6 | Pier 7 | Pier 8 | Pier 9 | Pier 10 | N. Abut. | Item 113 |
| Q100 | 423.8 | 408.6 | 409.0 | 409.0 | 409.0 | 409.0 | 408.5 | 408.3 | 408.1 | 407.2 | 405.5 | 424.5 | 5 |
| Q200 | 423.8 | 408.6 | 409.0 | 409.0 | 409.0 | 409.0 | 408.5 | 408.3 | 408.1 | 407.2 | 405.5 | 424.5 | |
| Design | 423.8 | 408.6 | 409.0 | 409.0 | 409.0 | 409.0 | 408.5 | 408.3 | 408.1 | 407.2 | 405.5 | 424.5 | |
| Check | 423.8 | 408.6 | 409.0 | 409.0 | 409.0 | 409.0 | 408.5 | 408.3 | 408.1 | 407.2 | 405.5 | 424.5 | |

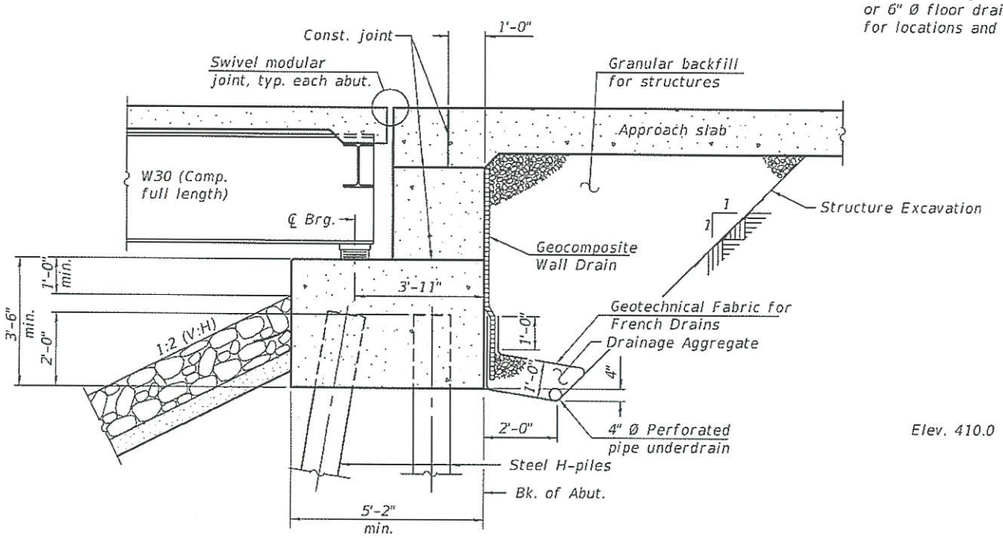


## SECTION THRU PILE SUPPORTED STUB ABUTMENT

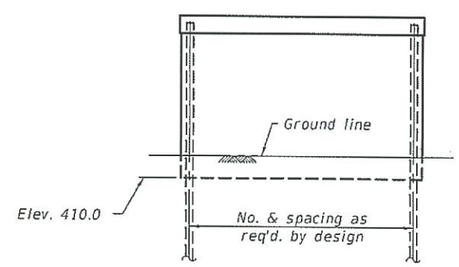


## PIER SKETCH
(Piers 1 thru 4 & 7 thru 10)

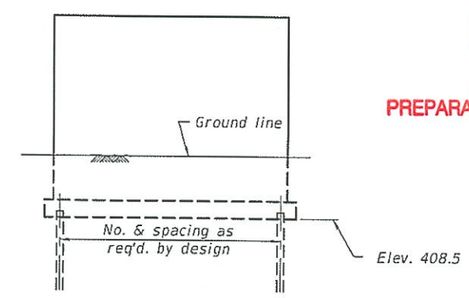


## PIER SKETCH
(Piers 5 & 6)

APPROVED

DEC 31 2018

AS A BASIS FOR PREPARATION OF DETAILED PLANS

## DETAILS
## ILLINOIS ROUTE 1 OVER EMBARRAS RIVER OVERFLOW
## F.A.P. RTE. 332 - SEC. (16BR-1,BR-2)B-1
## LAWRENCE COUNTY
## STATION 59+08.34
## STRUCTURE NO. 051-0075

| | | |
|---|---|---|
| DESIGNED - | NICHOLAS R. BARNETT | |
| CHECKED - | JUSTIN T. BELUE | |
| DRAWN - | MICHAEL B. MOSSMAN | |
| CHECKED - | N.R.B. / J.T.B. | 12/17/2018 4:19:51 PM |

STATE OF ILLINOIS
DEPARTMENT OF TRANSPORTATION

SHEET 2 OF 2 SHEETS

| F.A.P. RTE. | SECTION | COUNTY | TOTAL SHEETS | SHEET NO. |
|---|---|---|---|---|
| 332 | (16BR-1,BR-2)B-1 | LAWRENCE | — | — |
| | | CONTRACT NO. 74164 | | |
| | | ILLINOIS FED. AID PROJECT | | |

MODEL: 0510075-74164-TSL-002
FILE NAME: pw:\\IL084EBIDNTEG.illinois.gov:PWIDOT\Documents\IDOT Offices\Bureau of Bridges and Structures\Projects\0510075\CADD Plans\0510075-74164.dgn