Bench Mark: USGS Disk DM014 on top of NE bridge wingwall Sta. 32+35, 4' Lt, Elev. 862.46

Existing Structure: SN 056-0025 built in 1936 on SBI-47, Section 105X-B is a double span reinforced concrete bridge which carries one northbound and one southbound lane of IL 47 over the Kishwaukee River. The back-to-back of abutments measures 39'-0" and out-to-out dimension measures 47'-0". Existing structure is to be removed.

Traffic Control: The new structure will be constructed in Stage 1 on a new alignment. Two-way traffic will be maintained on existing structure during Stages 1, 2 and 3 of construction. See "Suggested Stages of Construction and Traffic Control" plans for more information. The existing structure is to be removed in Stage 4.

No salvage

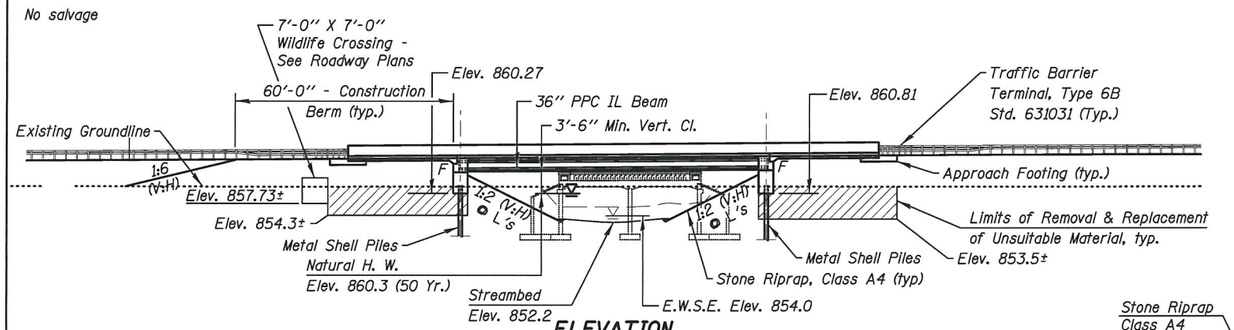

ELEVATION

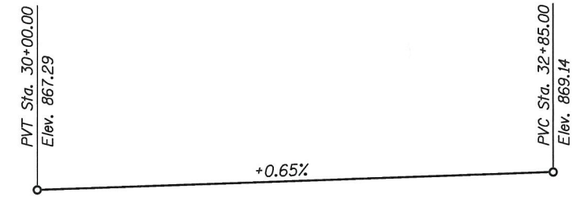

PROFILE GRADE

(Along PGL of Il. Rte. 47)

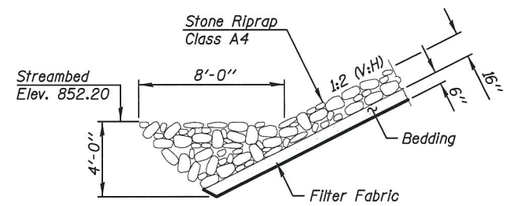

SECTION A-A

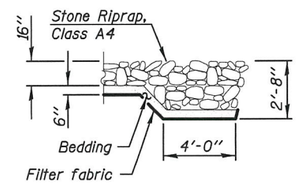

SECTION B-B

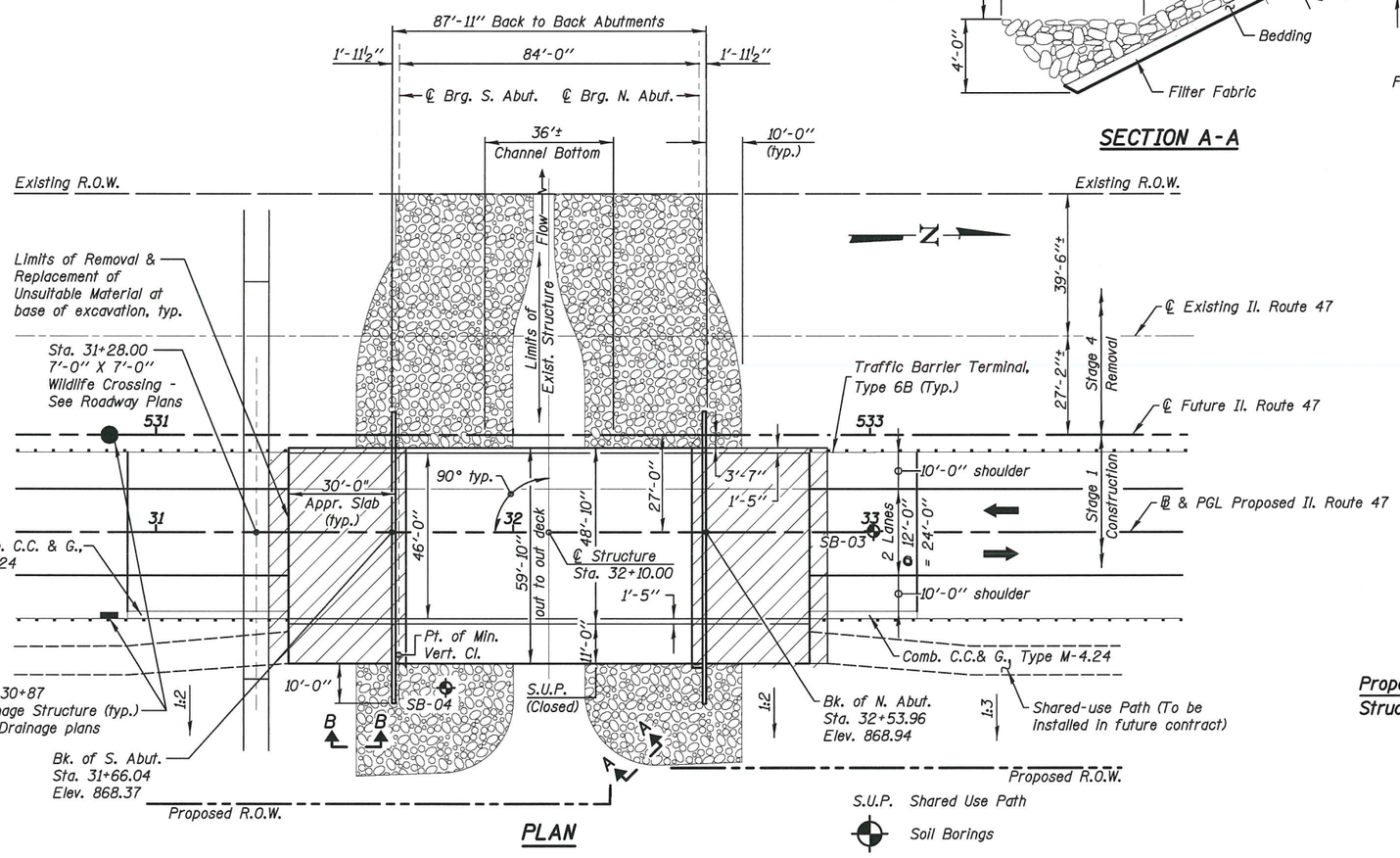

PLAN

SECTION B-B

SCOUR ELEVATION TABLE

Design Scour Elevations (ft.)			Item 113
Event/Limit State	SN 056-0316 S. Abut.	SN 056-0316 N. Abut.	
Q100	860.27	860.81	8
Q200	860.27	860.81	
Design	860.27	860.81	
Check	860.27	860.81	

WATERWAY INFORMATION

Drainage Area = 14.47 sq. mi. Low Grade Elev. 865.10 @ Sta. 21+75

Flood	Freq. Yr.	Q (c.f.s.) Exist.	Q (c.f.s.) Prop.	Opening Sq. Ft. Exist.	Opening Sq. Ft. Prop.	Nat. H.W.E.	Head - Ft. Exist.	Head - Ft. Prop.	Headwater El. Exist.	Headwater El. Prop.
-	10	431	431	155	230	858.7	0.6	0.4	859.3	859.1
Design	50	930	930	212	340	860.3	0.7	0.4	860.9	860.7
Base	100	1255	1255	230	379	860.8	0.9	0.6	861.7	861.3
-	200	1400	1400	236	395	861.0	0.8	0.6	861.8	861.6
Max. Calc.	500	1880	1880	247	433	861.5	0.4	0.9	861.9	862.4

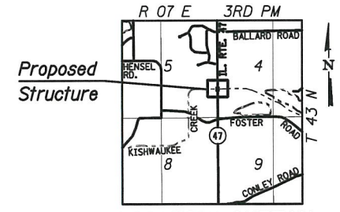

LOCATION SKETCH

HIGHWAY CLASSIFICATION

F.A.P. Route 326 - IL Rte. 47
Functional Class: Other Principal Arterial (Rural SRA)
ADT: 15,200 (2011); 21,000 (2040)
DHV: 1,340 (2011); 1,770 (2040)
ADTT: 1,325 (2015); 1,533 (2040)
Design Speed: 60 mph
Posted Speed: 55 mph
Directional Distribution: 50:50
Two-Way Traffic

DESIGN SPECIFICATIONS

2017 AASHTO LRFD Bridge Design Specifications, 8th Edition

LOADING HL 93

Allow 50#/sq. ft. for future wearing surface.

DESIGN STRESSES

FIELD UNITS

f'_c = 3,500 psi
f'_c = 4,000 psi (Superstructure concrete)
f_y = 60,000 psi (Reinforcement)

PRECAST PRESTRESSED UNITS

f'_c = 8,500 psi
f'_{ci} = 7,000 psi
f_{pu} = 270,000 psi (0.6" ϕ low lax strands)
f_{pbt} = 202,300 psi (0.6" ϕ low lax strands)

SEISMIC DATA

Seismic Performance Zone (SPZ) = 1
Design Spectral Acceleration at 1.0 sec. (S_{D1}) = 0.08g
Design Spectral Acceleration at 0.2 sec. (S_{DS}) = 0.139g
Soil Site Class = D

APPROVED

AUG 22 2018

AS A BASIS FOR PREPARATION OF DETAILED PLANS

GENERAL PLAN

IL RTE, 47 OVER KISHWAUKEE RIVER
F.A.P. RTE. 326 SEC. (105XB)B-R
MCHENRY COUNTY
STA. 32+10.00
STRUCTURE NO. 056-0316

KNIGHT Engineers & Architects					STATE OF ILLINOIS DEPARTMENT OF TRANSPORTATION	STRUCTURAL PLANS GENERAL PLAN AND ELEVATION ILLINOIS ROUTE 47 SHEET NO. 1 OF 3 SHEETS	F.A.P. RTE.	SECTION	COUNTY	TOTAL SHEETS	SHEET NO.
		DESIGNED - JW	REVISED				326	(105XB)B-R	MCHENRY	3	1
		CHECKED - AMD	REVISED						CONTRACT NO. 62A80		
SCALE - NONE		DRAWN - BK	REVISED						ILLINOIS FED. AID PROJECT		
DATE - 8/21/2018		CHECKED - TB	REVISED								

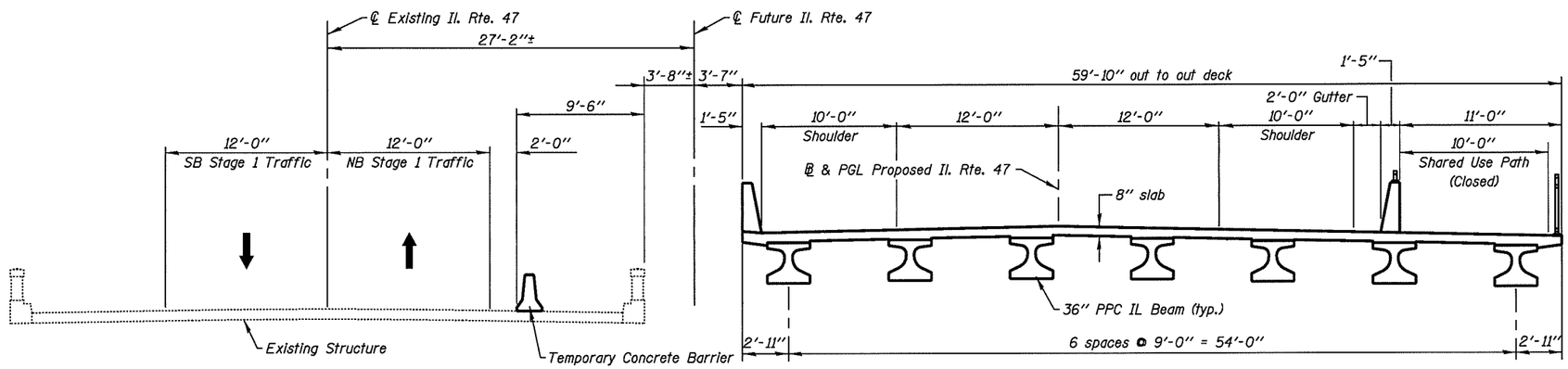

STAGE 1 CONSTRUCTION
(Looking North)

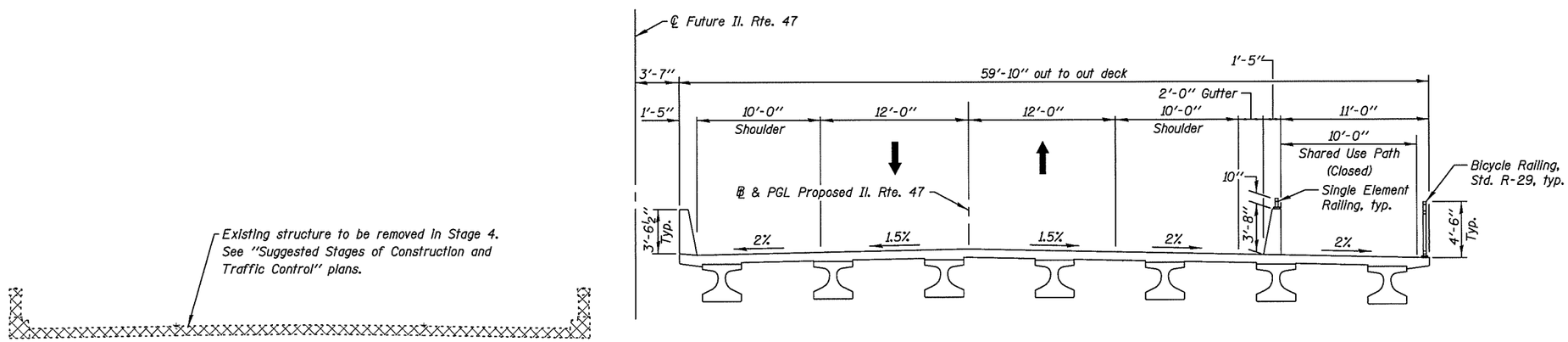

REMOVAL AND PROPOSED CROSS SECTION
(Looking North)

IL RTE. 47 OVER KISHWAUKEE RIVER
F.A.P. RTE. 326 SEC. (105XB)B-R
MCHENRY COUNTY
STA. 32+10.00
STRUCTURE NO. 056-0316

KNIGHT Engineers & Architects		DESIGNED - JW	REVISED	STATE OF ILLINOIS DEPARTMENT OF TRANSPORTATION	STRUCTURAL PLANS CONSTRUCTION STAGING AND REMOVAL ILLINOIS ROUTE 47	F.A.P. RTE.	SECTION	COUNTY	TOTAL SHEETS	SHEET NO.
		CHECKED - AMD	REVISED			326	(105XB)B-R	MCHENRY	3	2
	SCALE - NONE	DRAWN - BK	REVISED					CONTRACT NO. 62A80		
	DATE - 8/21/2018	CHECKED - TB	REVISED		SHEET NO. 2 OF 3 SHEETS		ILLINOIS	FED. AID PROJECT		

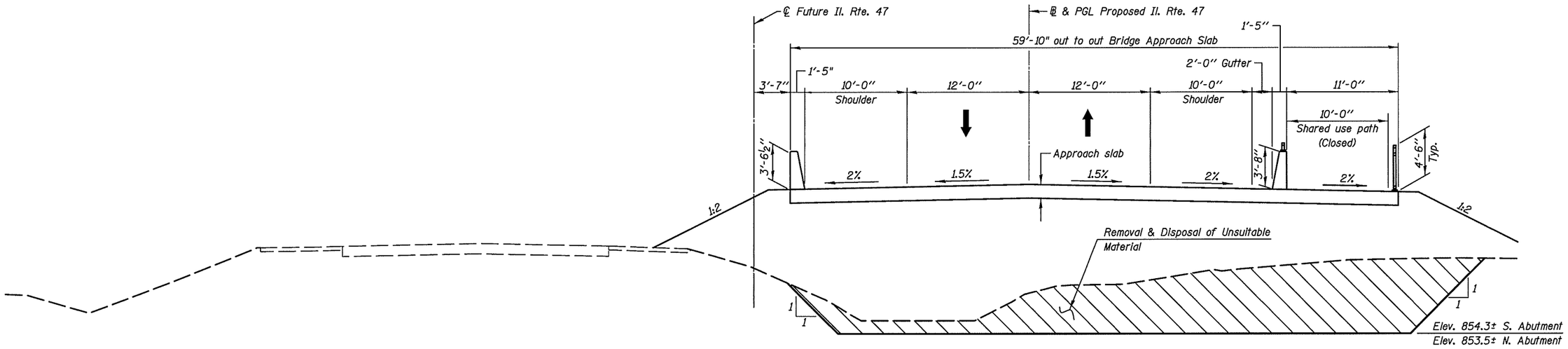

CROSS SECTION
(Looking North)

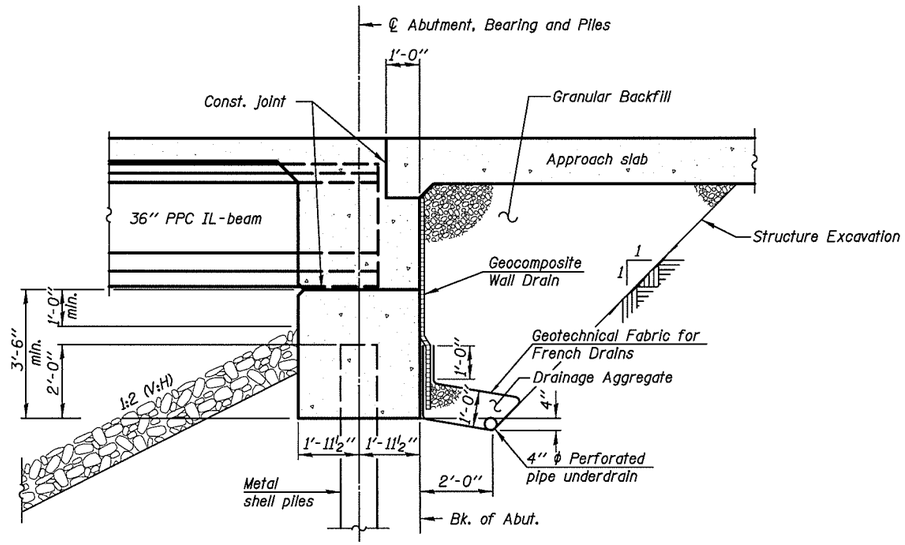

SECTION THRU INTEGRAL ABUTMENT

CROSS SECTION
IL RTE. 47 OVER KISHWAUKEE RIVER
F.A.P. RTE. 326 SEC. (105XB)B-R
MCHENRY COUNTY
STA. 32+10.00
STRUCTURE NO. 056-0316

KNIGHT Engineers & Architects		DESIGNED - JW	REVISED	STATE OF ILLINOIS DEPARTMENT OF TRANSPORTATION	STRUCTURAL PLANS CROSS SECTION ILLINOIS ROUTE 47	F.A.P. RTE.	SECTION	COUNTY	TOTAL SHEETS / SHEET NO.
		CHECKED - AMD	REVISED			326	(105XB)B-R	MCHENRY	3 / 3
	SCALE - NONE	DRAWN - BK	REVISED					CONTRACT NO. 62A80	
	DATE - 8/21/2018	CHECKED - TB	REVISED		SHEET NO. 3 OF 3 SHEETS		ILLINOIS FED. AID PROJECT		