Bench Mark: CB-22 RR spike in a utility pole on west side of Christ Church Road. ±900 feet north of the intersection of Farmington Road. and Christ Church Road. Elev. 713.307 (NAVD 88)

Existing Structure: None

Note: Precast alternate is not allowed.

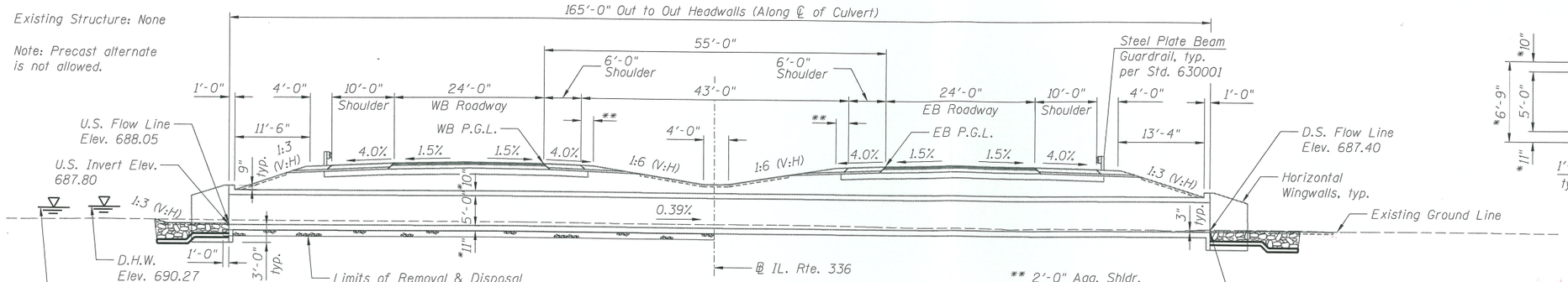

LONGITUDINAL SECTION

(Along ℄ of Culvert)

Dimensions measured @ Rt. L's to ℄ of IL Rte. 336 unless noted otherwise

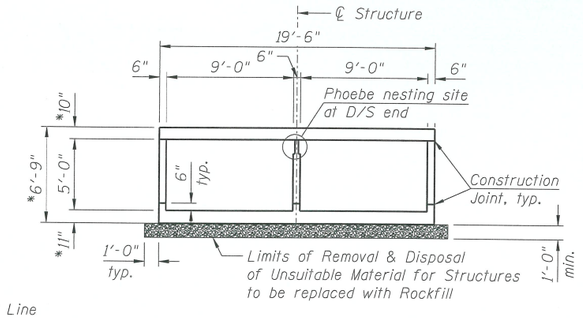

SECTION THROUGH BARREL

(@ Rt. L's to ℄ Structure)

* Top & Bottom Slab thickness subject to refinement in final design.

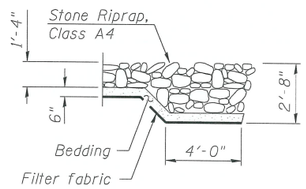

SECTION A-A

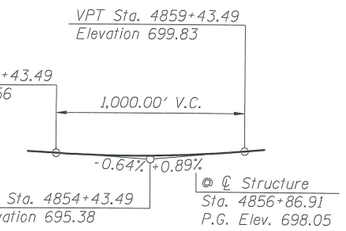

PROFILE GRADE

(IL. Rte. 336)

(Along EB & WB P.G.L's)

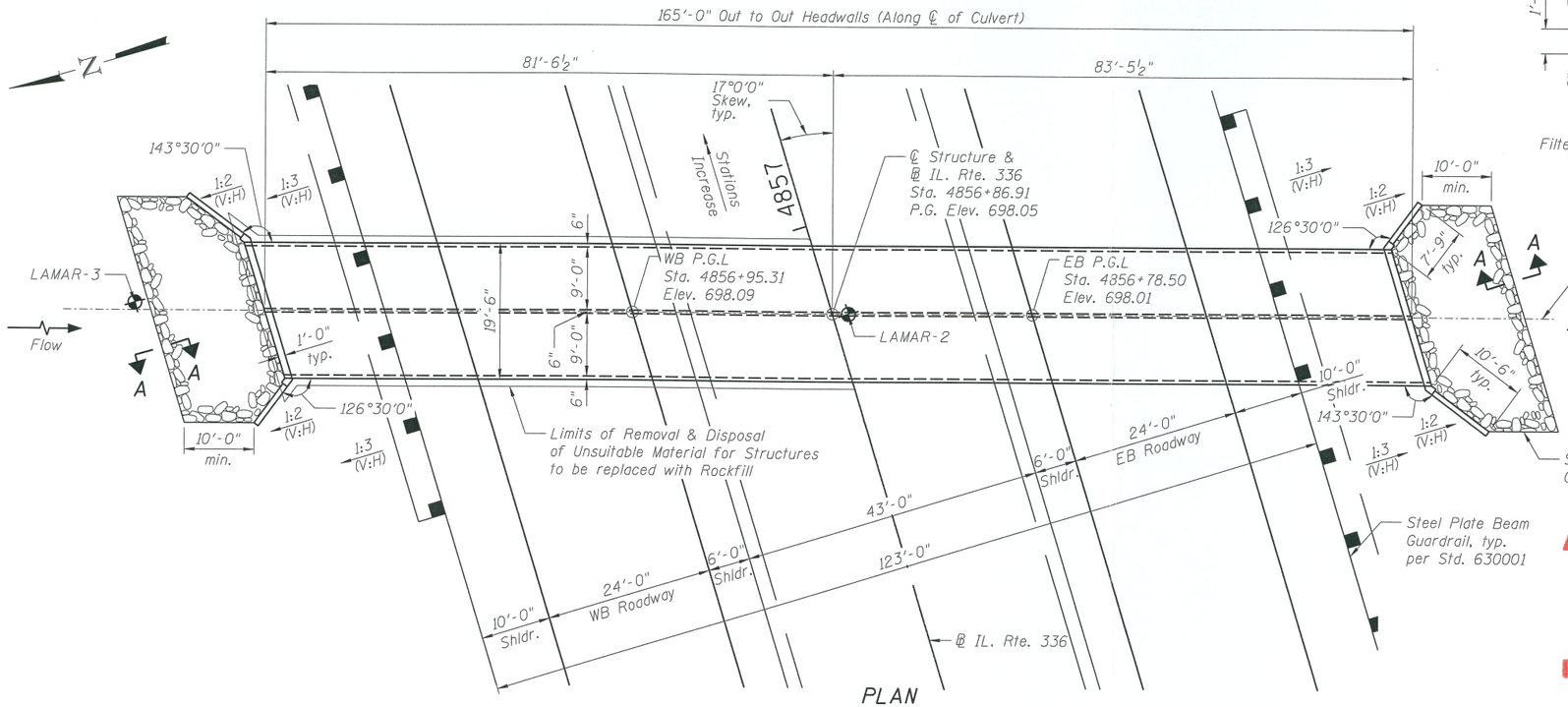

PLAN

APPROVED

JUN 11 2019

AS A BASIS FOR PREPARATION OF DETAILED PLANS

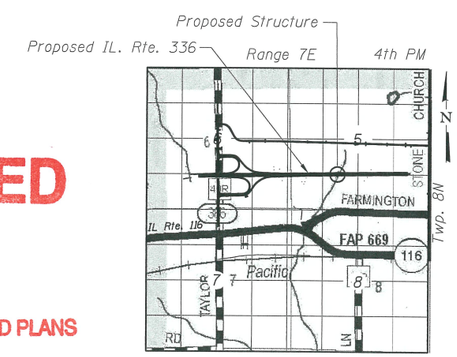

LOCATION SKETCH

WATERWAY INFORMATION

Drainage Area = 0.32 sq. mi.

Existing Low Grade Elevation = N.A.ft. @ Sta.

Proposed Low Grade Elevation = 697.25ft. @ Sta. 4854+00

Flood	Frequency Year	Discharge (cfs)	Waterway Opening (sq. ft.) Existing	Waterway Opening (sq. ft.) Proposed	Natural H.W.E.	Head (ft.) Existing	Head (ft.) Proposed	Headwater Elev. Existing	Headwater Elev. Proposed
	10	212	-	33	689.9	-	0.2	-	690.1
Design	50	356	-	41	690.3	-	0.7	-	691.0
Base	100	424	-	42	690.4	-	1.0	-	691.4
Overtopping			-		-	-	-	-	-
Max. Calc.	500	590	-	48	690.7	-	1.7	-	692.4

LEGEND

- Soil Boring Location

HIGHWAY CLASSIFICATION

FAP Rte. 315 - IL. Rte. 336
Functional Class: Freeway
ADT: 7700 (2015); 9400 (2035)
ADTT: 770 (2015); 940 (2035)
DHV: 1030 (2035)
Design Speed: 70 m.p.h.
Posted Speed: 65 m.p.h.
2 -Way Traffic
Directional Distribution: 50/50

LOADING HL-93

Allow 50#/sq. ft. for future wearing surface.

DESIGN SPECIFICATIONS

2017 AASHTO LRFD Bridge Design Specifications, 8th Edition

DESIGN STRESSES

FIELD UNITS

f'c = 3,500 psi (Concrete)
fy = 60,000 psi (Reinforcement)

GENERAL PLAN
IL RTE. 336 OVER W. BRANCH OF LAMARSH CREEK
FAP 315 - SEC. 72-1
PEORIA COUNTY
STATION 4856+86.91
STRUCTURE NO. 072-2043

AECOM

USER NAME = dabeziad	DESIGNED - DD	REVISED -	STATE OF ILLINOIS DEPARTMENT OF TRANSPORTATION
	CHECKED - ATB	REVISED -	
PLOT SCALE =	DRAWN - GF	REVISED -	
PLOT DATE = 6/3/2019	CHECKED - DD	REVISED -	

SHEET NO. 1 OF 1 SHEETS

F.A.I. RTE.	SECTION	COUNTY	TOTAL SHEETS	SHEET NO.
315	72-1	PEORIA	1	1

CONTRACT NO. 68A04

ILLINOIS FED. AID PROJECT

D468A04-072-2043-SHT-001-LaMarsh.dgn