BENCHMARK

Square cut on top of concrete barrier wall at the beginning of the bridge eastbound on Illinois side of river. Elev. 588.073

EXISTING STRUCTURES

SN. 081-0106 dual structures (EB & WB). The bridge built in 1970, carries Interstate Route 280 over the Mississippi river. The bridge consist of 14 spans in the east approach, one span over the river and 13 spans in the west approach. The superstructure of the East and West approaches consist of a reinforced concrete deck supported on continuous composite, welded plate girders. The main 570'-0" tied arch span supports the reinforced concrete deck on stringers and floor beams and provides a 500'-0" clear navigational channel. The abutments are pile bents while the piers are reinforced concrete piers of two column bents founded on a single footing supported either directly on shale or with steel H piles.

The rehabilitation of the dual structures will be done utilizing stage construction while maintaining a lane of traffic in each direction.

No Salvage.

SCOPE OF WORK

1. Remove the existing stay in place formed deck of the approaches and the arch span and replace with an 8¾" deck (prior to grinding) at the approach spans, and 8¼" deck (prior to grinding) within the tied arch span, utilizing stage construction. The profile will be raised to accommodate the revised cross slope from 3/16" per foot (1.5%) to ¼" per foot (2.0%). Bridge parapets will be constant-slop, 44" tall, TL-5 parapets.
2. Install additional shear connectors in positive moment areas of approach span existing girders as necessary.
3. All existing structural steel shall be cleaned and painted within 25 feet of an expansion joint. The exterior face and bottom flange of the facia girders shall be cleaned and painted for the entire length of the approaches. The arch ties will also be painted.
4. Remove the existing approach slabs and replace with current standards.
5. Repair existing piers, abutments and wingwalls using formed concrete repair and epoxy injection for cracks more than 1/16".
6. Remove the existing sliding plate expansion joints at the abutments and preformed stip seal within the arch span. Replace with Preformed Strip Seal joints. Replace existing finger plate expansion joints with modular joints.
7. Replace all navigational lights with LED lights.
8. Reconstruct bearing seats at the abutments and piers 3, 7, 10, 14, 17, 20 & 24 to accommodate new elastomeric and HLMR expansion bearings. Clean and paint all other existing bearings including those of the tied arch.

HIGHWAY CLASSIFICATION

F.A.I. RTE. 280
Functional Class: Principal Arterial Interstate
DHV: 1,948 (2015) 2,625 (2035)
AADT: 19,475 (2015) 26,225 (2035)
ADTT: 5,648 (2015) 7,605 (2035)
Design Speed: 70 MPH
Posted Speed: 65 MPH

DESIGN SPECIFICATIONS

AASHTO Standard Specifications For Highway Bridges, 17Th Edition 2002

DESIGN LOADINGS

DEAD LOADS
Future Wearing Surface - 25 PSF
LIVE LOADS
A. AASHTO HS20-44 Plus Impact
B. Alternate Military Loading

DESIGN STRESSES

f'c = 4,000 PSI (Superstructure)
f'c = 3,500 PSI (Substructure)
fy = 60,000 PSI (Reinforcement)
fy = 36,000 PSI (Grade 36 - Existing)
fy = 50,000 PSI (Grade 50 - New)

SEISMIC LOADS

Seismic Performance Category (SPC) = A
Bedrock Acceleration Coefficient (A) = 0.04g
Site Coefficient (S) = 1.0

APPROVED
SEP 2 6 2019
AS A BASIS FOR
PREPARATION OF DETAILED PLANS

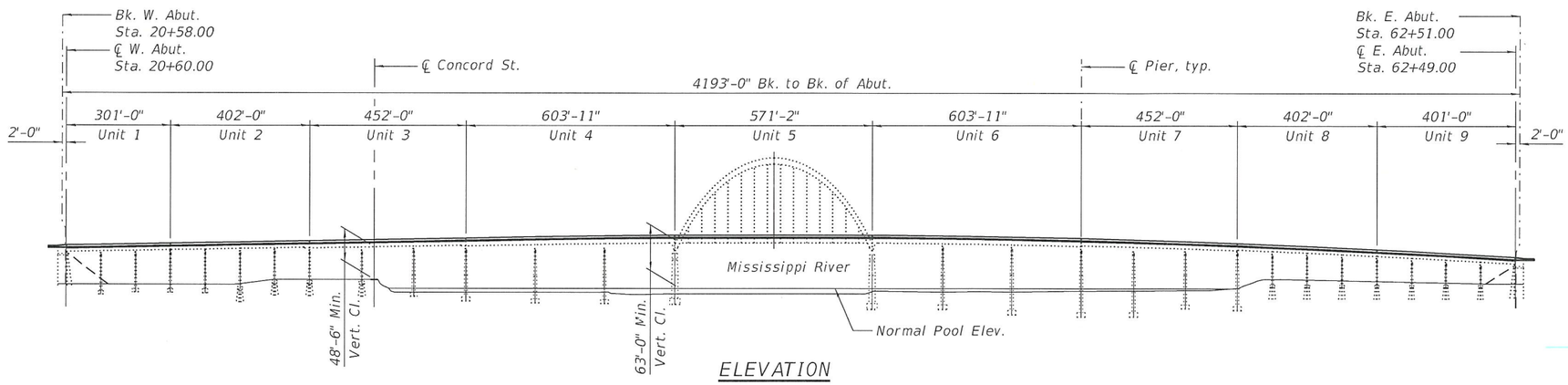

ELEVATION

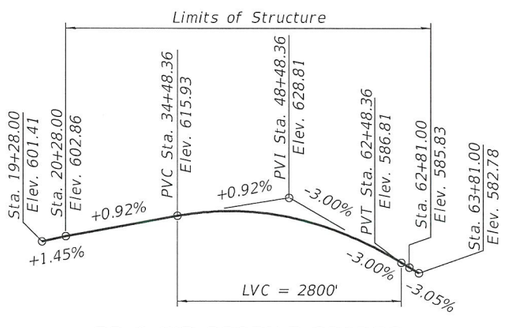

EB & WB PROFILE GRADES
(Along Prop. I-280)

DESIGN SCOUR ELEVATION TABLE

Event / Limit State	Design Scour Elevations (ft.)										Item 113
	E. Abut.	Pier 1	Pier 2	Pier 3	Pier 4	Pier 5	Pier 6	Pier 7	Pier 8	Pier 9	
Q100	490.45	544.2	545.4	545.2	545.6	545.0	545.6	544.4	550.9	535.1	5
Q200	490.45	543.6	544.9	544.7	545.1	544.6	545.0	543.8	550.6	535.0	
Design	490.45	535.0	538.5	538.0	537.0	542.0	545.6	544.4	550.0	532.5	
	Pier 10	Pier 11	Pier 12	Pier 13	Pier 14	Pier 15	Pier 16	Pier 17	Pier 18	Pier 19	
Q100	526.5	526.2	525.1	521.3	517.1	518.2	521.7	515.6	517.9	526.3	
Q200	526.4	526.1	525.0	521.1	517.0	517.8	521.1	515.0	517.5	526.0	
Design	526.0	525.0	525.0	521.0	514.0	514.0	510.0	503.0	506.0	515.0	
	Pier 20	Pier 21	Pier 22	Pier 23	Pier 24	Pier 25	Pier 26	Pier 27	E. Abut.	-	
Q100	515.7	542.8	544.5	544.5	543.7	546.9	544.7	546.0	574.05		
Q200	515.4	542.2	543.9	543.9	543.1	546.6	544.2	546.7	574.05		
Design	510.5	542.8	544.5	544.5	543.7	546.0	544.7	546.0	574.05		

NOTES:

1. Specific repairs based on 2018 NBIS Report, future inspections, Contract 64F78 and other sources are listed in a separate repair document.
2. Span lengths shown are based on existing plans. Based on the available field survey, span lengths may vary from that shown. Contractor shall field verify and compare to final drawings.

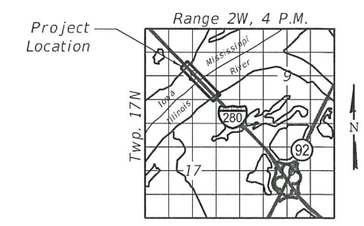

LOCATION SKETCH

GENERAL PLAN
I-280 BRIDGE
OVER THE MISSISSIPPI RIVER
F.A.I. ROUTE 280
SEC. 81-1B,81-1 (F&E) & 81-1D
ROCK ISLAND COUNTY
STATION 41+45.00
STRUCTURE NO. 081-0106

MODEL: $MODELNAME$
FILE NAME: $FILEL$

BURNS McDONNELL

USER NAME = $USER$	DESIGNED - GEK	REVISED -	
	CHECKED - DEF	REVISED -	
PLOT SCALE = N.T.S	DRAWN -	REVISED -	
PLOT DATE = $DATE$	CHECKED -	REVISED -	

$DATE$ $TIME$

STATE OF ILLINOIS
DEPARTMENT OF TRANSPORTATION

SHEET 1 OF 8 SHEETS

F.A.I. RTE.	SECTION	COUNTY	TOTAL SHEETS	SHEET NO.
280	81-1B, 81-1(F&E) & 81-1D	ROCK ISLAND	8	1
		CONTRACT NO. 64F78		
		ILLINOIS	FED. AID PROJECT	

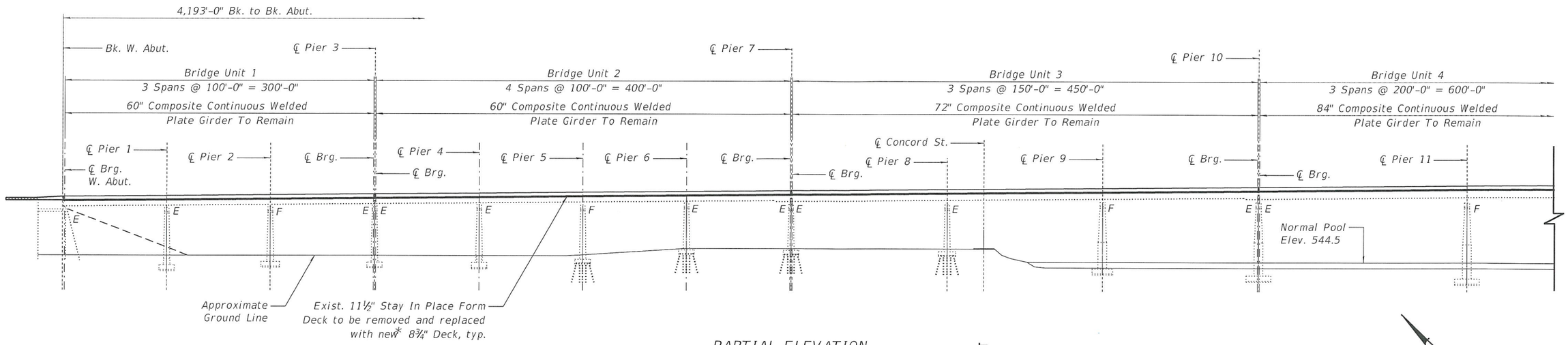

PARTIAL ELEVATION

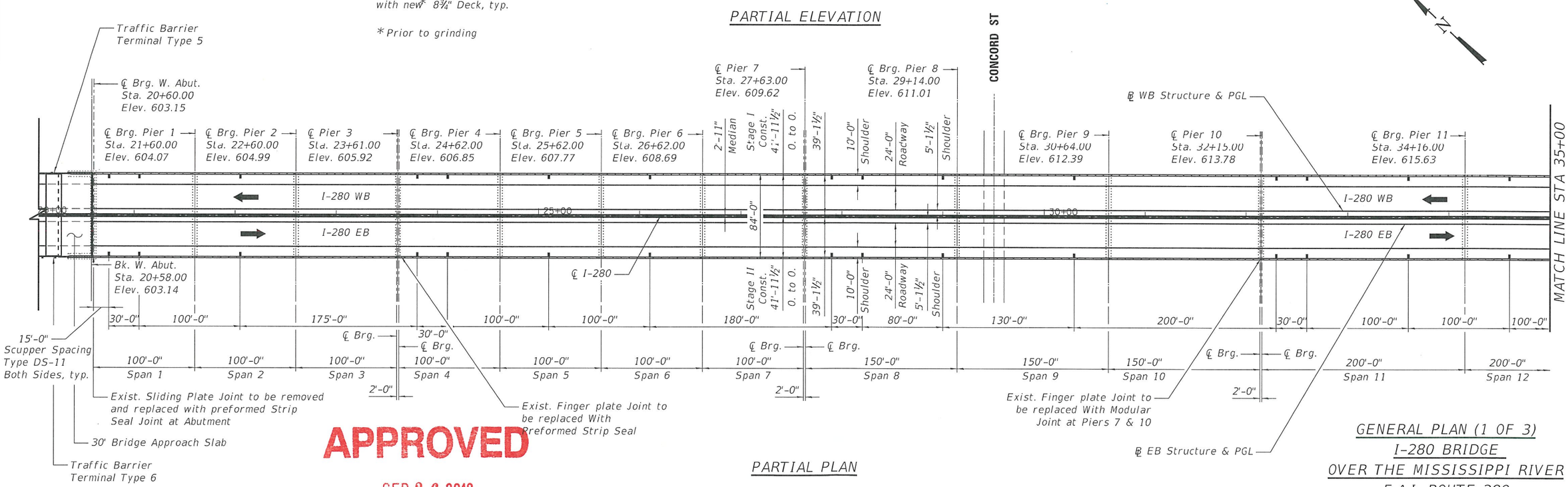

PARTIAL PLAN

APPROVED

SEP 2 6 2019

AS A BASIS FOR PREPARATION OF DETAILED PLANS

NOTES:

1. Dimensions of existing elements to remain are taken from existing plans
2. Elevations and stations shown are taken along WB & EB PGL

GENERAL PLAN (1 OF 3)
I-280 BRIDGE
OVER THE MISSISSIPPI RIVER
F.A.I. ROUTE 280
SEC. 81-1B,81-1 (F&E) & 81-1D
ROCK ISLAND COUNTY
STATION 41+45.00
STRUCTURE NO. 081-0106

BURNS McDONNELL	USER NAME = $USER$	DESIGNED - GEK	REVISED -
		CHECKED - DEF	REVISED -
	PLOT SCALE = N.T.S	DRAWN -	REVISED -
	PLOT DATE = $DATE$	CHECKED -	REVISED -

STATE OF ILLINOIS
DEPARTMENT OF TRANSPORTATION

SHEET 2 OF 8 SHEETS

F.A.I. RTE.	SECTION	COUNTY	TOTAL SHEETS	SHEET NO.
280	81-1B, 81-1(F&E) & 81-1D	ROCK ISLAND	8	2

CONTRACT NO. 64F78

ILLINOIS | FED. AID PROJECT

MODEL: $MODELNAME$
FILE NAME: $FILEL$

$DATE$ $TIME$

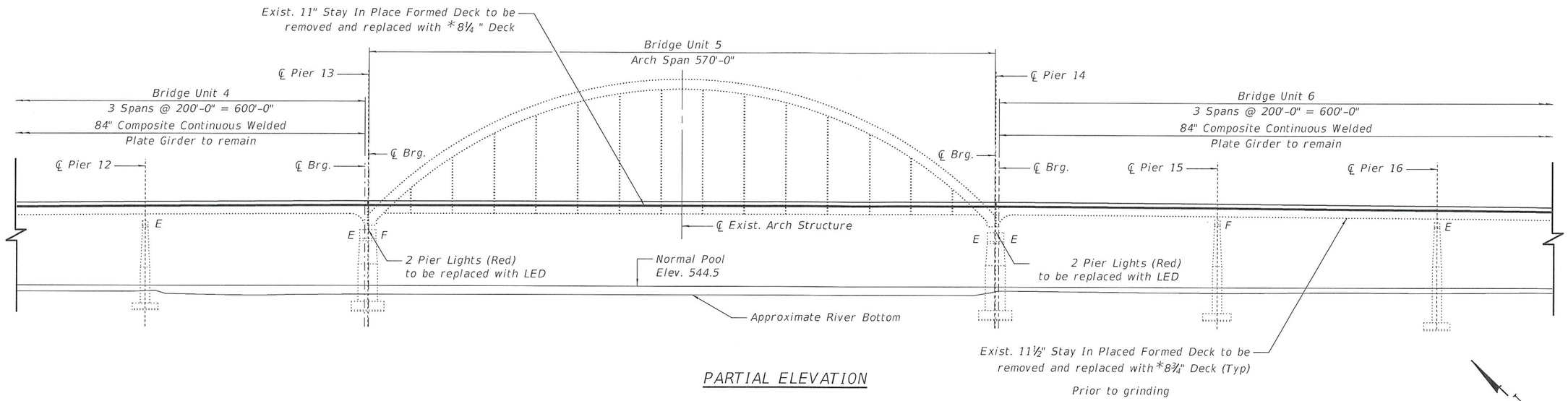

PARTIAL ELEVATION

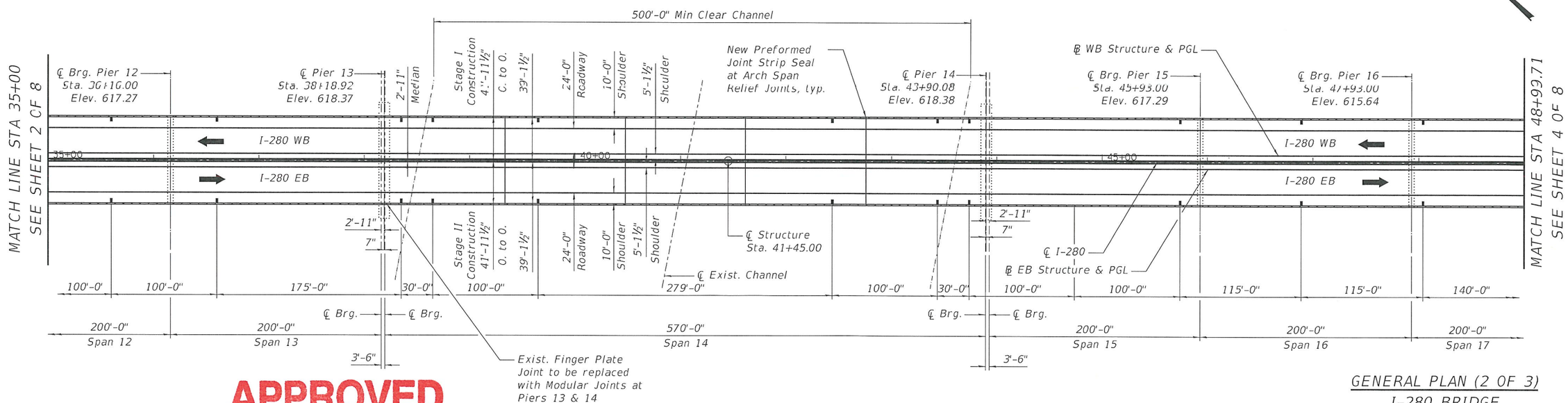

PARTIAL PLAN

APPROVED

SEP 26 2019

AS A BASIS FOR PREPARATION OF DETAILED PLANS

NOTES:

1. Dimensions of existing elements to remain are taken from existing plans.
2. Elevations and stations shown are taken along WB & EB PGL.

GENERAL PLAN (2 OF 3)
I-280 BRIDGE
OVER THE MISSISSIPPI RIVER
F.A.I. ROUTE 280
SEC. 81-1B,81-1 (F&E) & 81-1D
ROCK ISLAND COUNTY
STATION 41+45.00
STRUCTURE NO. 081-0106

MODEL: $MODELNAME$
FILE NAME: $FILE$

BURNS McDONNELL

USER NAME = $USER$	DESIGNED - GEK	REVISED -	
	CHECKED - DEF	REVISED -	
PLOT SCALE = N.T.S	DRAWN -	REVISED -	
PLOT DATE = $DATE$	CHECKED -	REVISED -	

$DATE$ $TIME$

STATE OF ILLINOIS
DEPARTMENT OF TRANSPORTATION

SHEET 3 OF 8 SHEETS

F.A.I. RTE.	SECTION	COUNTY	TOTAL SHEETS	SHEET NO.
280	81-1B, 81-1(F&E) & 81-1D	ROCK ISLAND	8	3
		CONTRACT NO. 64F78		
		ILLINOIS	FED. AID PROJECT	

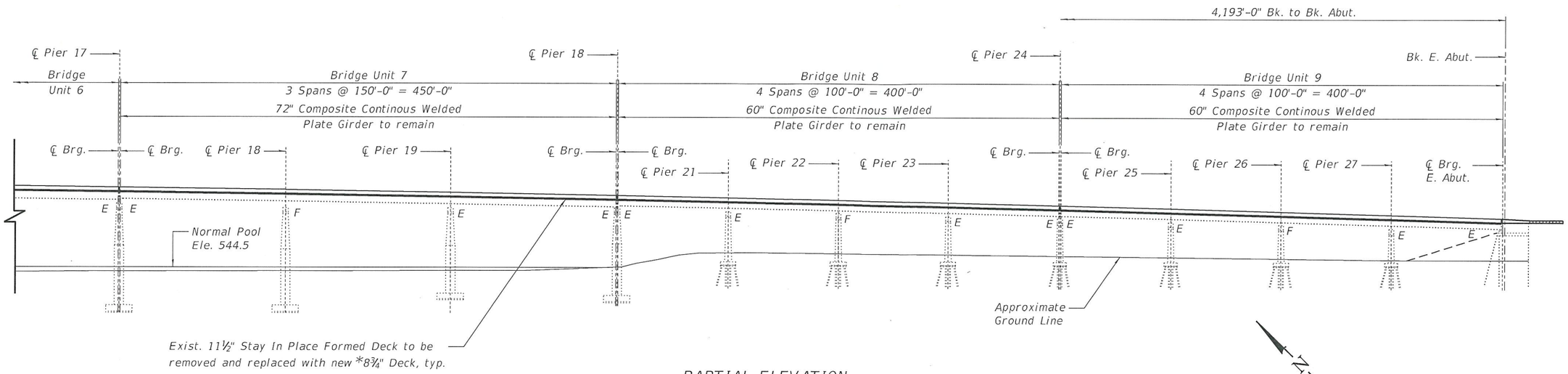

PARTIAL ELEVATION

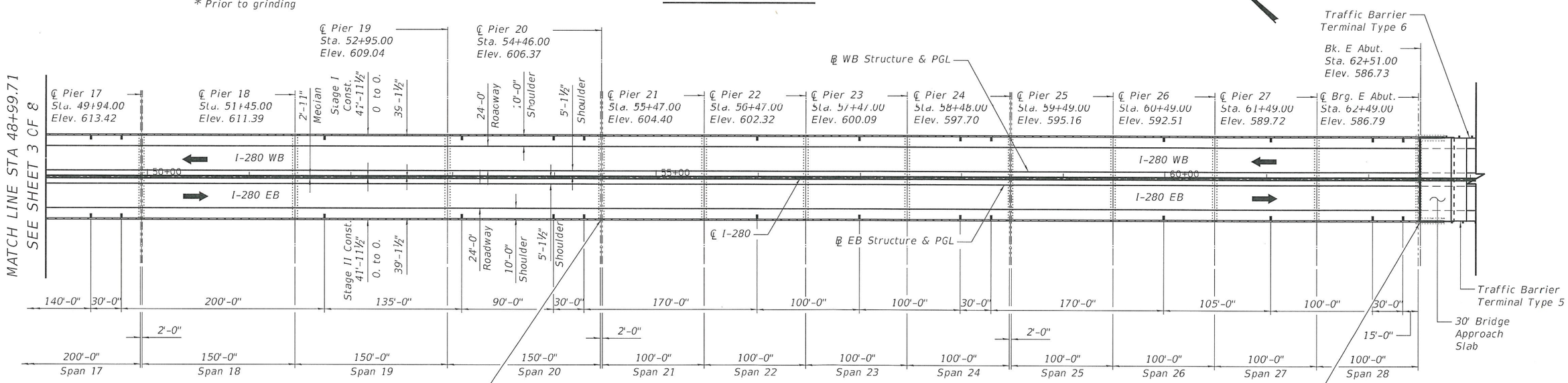

PARTIAL PLAN

APPROVED

SEP 2 6 2019

AS A BASIS FOR PREPARATION OF DETAILED PLANS

NOTES:

1. Dimensions of existing elements to remain are taken from existing plans.
2. Elevations and stations shown are taken along WB & EB PGL.

GENERAL PLAN (3 OF 3)
I-280 BRIDGE
OVER THE MISSISSIPPI RIVER
F.A.I. ROUTE 280
SEC. 81-1B,81-1 (F&E) & 81-1D
ROCK ISLAND COUNTY
STATION 41+45.00
STRUCTURE NO. 081-0106

MODEL: $MODELNAME$
FILE NAME: $FILE$

BURNS McDONNELL

USER NAME = $USER$	DESIGNED - GEK	REVISED -	
	CHECKED - DEF	REVISED -	
PLOT SCALE = N.T.S	DRAWN -	REVISED -	
PLOT DATE = $DATE$	CHECKED -	REVISED -	

STATE OF ILLINOIS
DEPARTMENT OF TRANSPORTATION

SHEET 4 OF 8 SHEETS

F.A.I. RTE.	SECTION	COUNTY	TOTAL SHEETS	SHEET NO.
280	81-1B, 81-1(F&E) & 81-1D	ROCK ISLAND	8	4

CONTRACT NO. 64F78

ILLINOIS | FED. AID PROJECT

$DATE$ $TIME$

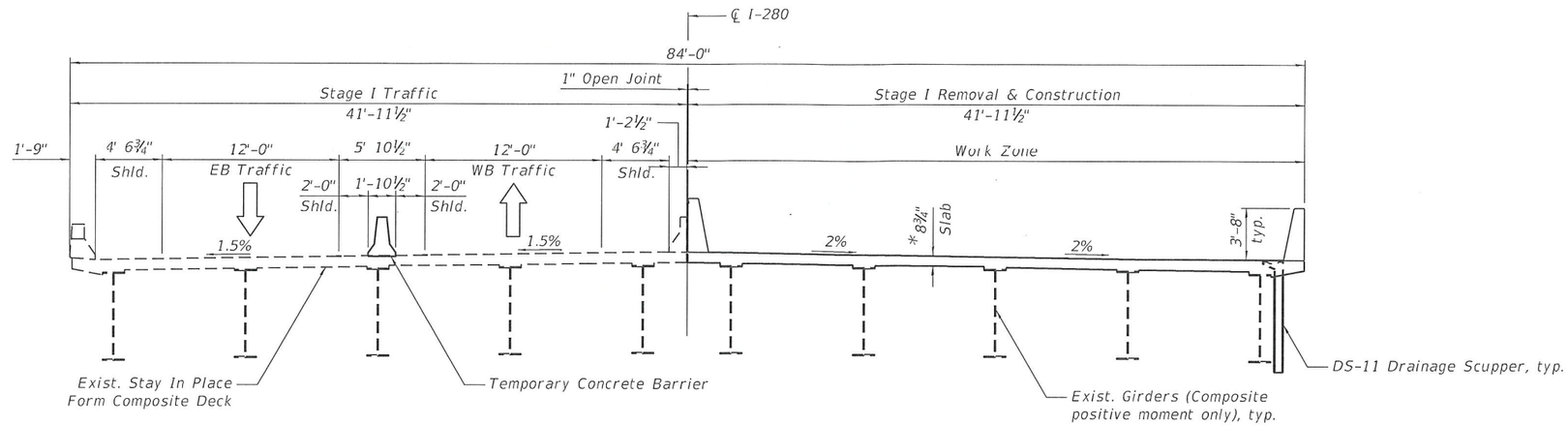

EASTBOUND STRUCTURE

STAGE I
REMOVAL & CONSTRUCTION

Section Thru Approach Span
(Looking West)

WESTBOUND STRUCTURE

*Prior to grinding

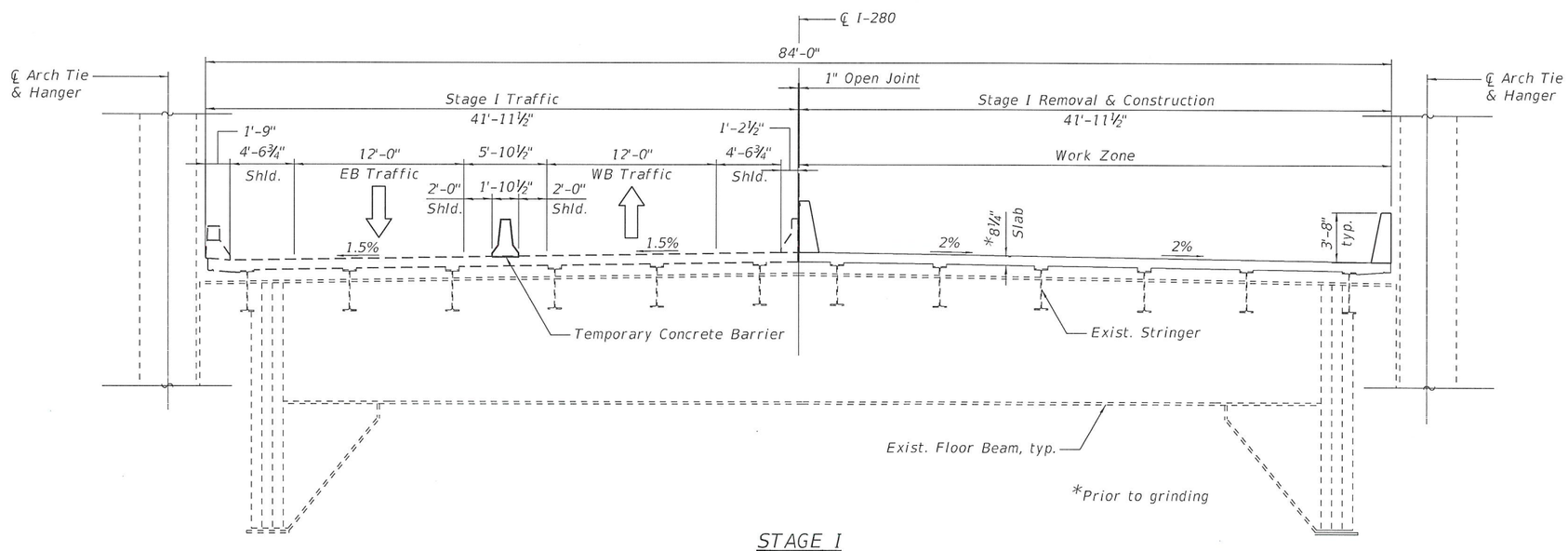

*Prior to grinding

EASTBOUND STRUCTURE

STAGE I
REMOVAL & CONSTRUCTION

Section Thru Arch Span
(Looking West)

WESTBOUND STRUCTURE

APPROVED

SEP 26 2019

AS A BASIS FOR
PREPARATION OF DETAILED PLANS

STAGE 1 CONSTRUCTION
I-280 BRIDGE
OVER THE MISSISSIPPI RIVER
F.A.I. ROUTE 280
SEC. 81-1B,81-1 (F&E) & 81-1D
ROCK ISLAND COUNTY
STATION 41+45.00
STRUCTURE NO. 081-0106

MODEL: $MODELNAME$
FILE NAME: $FILEL$

BURNS McDONNELL

USER NAME = $USER$	DESIGNED - GEK	REVISED -	
	CHECKED - DEF	REVISED -	
PLOT SCALE = N.T.S	DRAWN -	REVISED -	
PLOT DATE = $DATE$	CHECKED -	REVISED -	

$DATE$ $TIME$

STATE OF ILLINOIS
DEPARTMENT OF TRANSPORTATION

SHEET 5 OF 8 SHEETS

F.A.I. RTE.	SECTION	COUNTY	TOTAL SHEETS	SHEET NO.
280	81-1B, 81-1(F&E) & 81-1D	ROCK ISLAND	8	5
		CONTRACT NO. 64F78		
		ILLINOIS	FED. AID PROJECT	

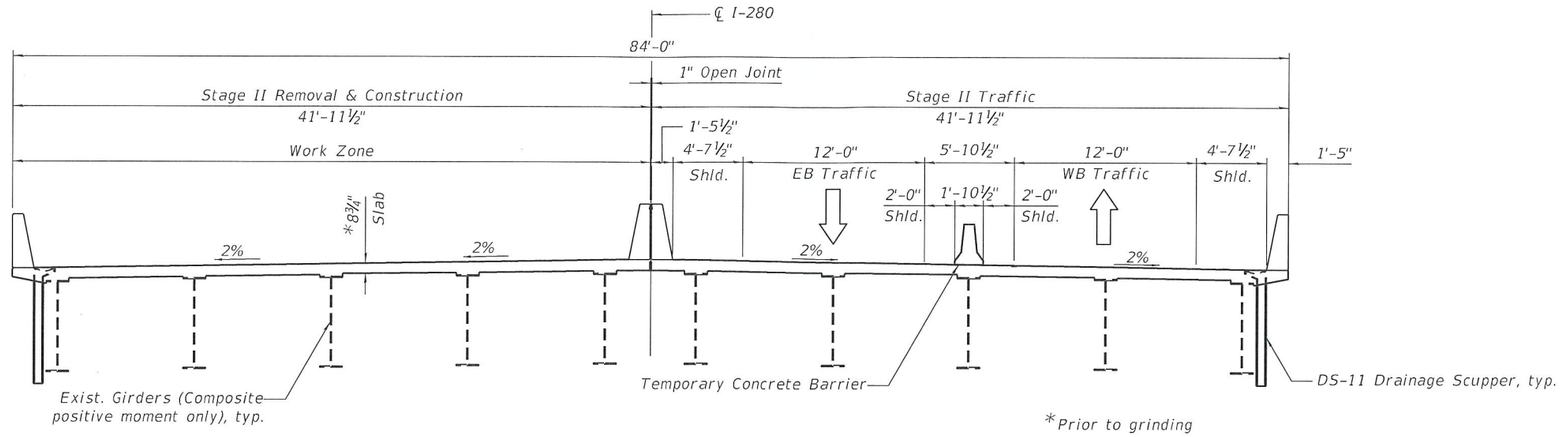

EASTBOUND STRUCTURE

STAGE II
REMOVAL & CONSTRUCTION

Section Thru Approach Span
(looking West)

WESTBOUND STRUCTURE

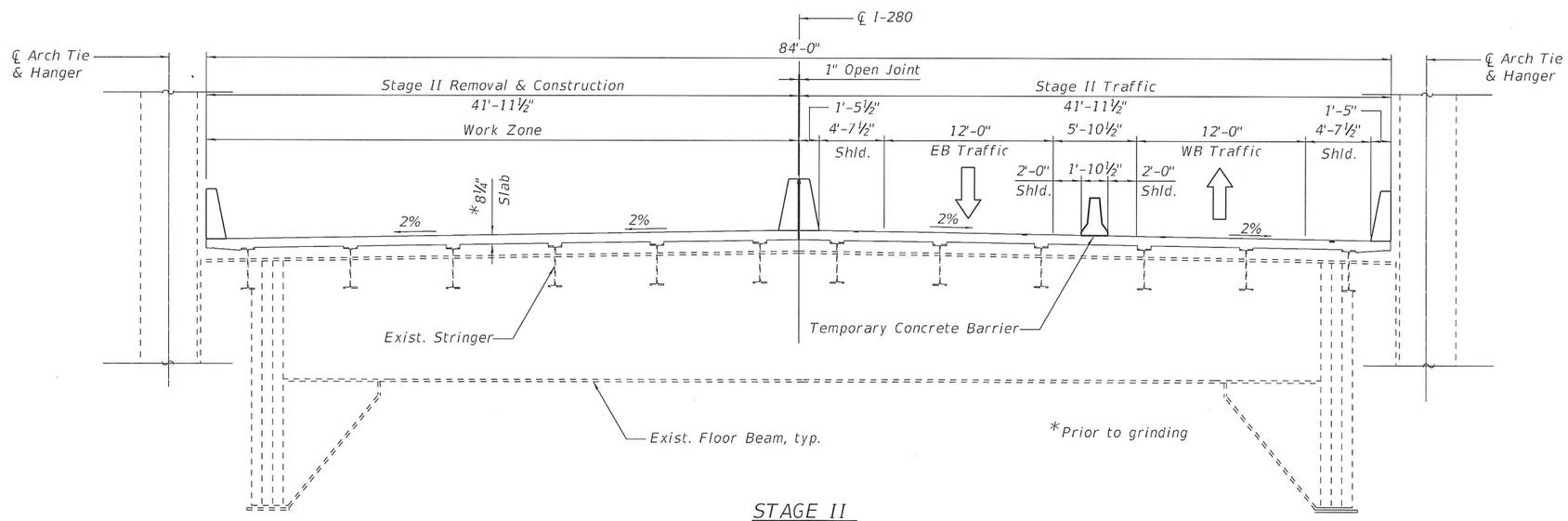

EASTBOUND STRUCTURE

STAGE II
REMOVAL & CONSTRUCTION

Section Thru Arch Span
(Looking West)

WESTBOUND STRUCTURE

APPROVED

SEP 2 6 2019

AS A BASIS FOR PREPARATION OF DETAILED PLANS

STAGE II CONSTRUCTION
I-280 BRIDGE
OVER THE MISSISSIPPI RIVER
F.A.I. ROUTE 280
SEC. 81-1B,81-1 (F&E) & 81-1D
ROCK ISLAND COUNTY
STATION 41+45.00
STRUCTURE NO. 081-0106

MODEL: $MODELNAME$
FILE NAME: $FILEL$

BURNS McDONNELL

USER NAME = $USER$	DESIGNED - GEK	REVISED -	
	CHECKED - DEF	REVISED -	
PLOT SCALE = N.T.S	DRAWN -	REVISED -	
PLOT DATE = $DATE$	CHECKED -	REVISED -	

STATE OF ILLINOIS
DEPARTMENT OF TRANSPORTATION

SHEET 6 OF 8 SHEETS

F.A.I. RTE.	SECTION	COUNTY	TOTAL SHEETS	SHEET NO.
280	81-1B, 81-1(F&E) & 81-1D	ROCK ISLAND	8	6
		CONTRACT NO. 64F78		
		ILLINOIS	FED. AID PROJECT	

$DATE$ $TIME$

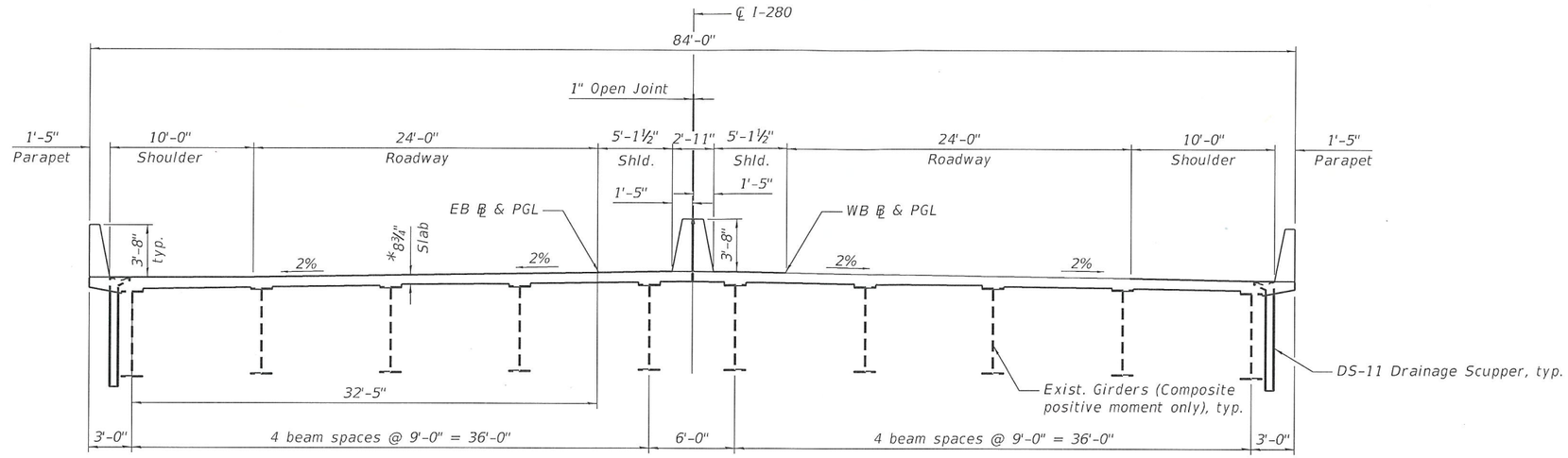

*Prior to grinding

EASTBOUND STRUCTURE

FINAL CROSS SECTION

Section Thru Approach Span
(Looking West)

WESTBOUND STRUCTURE

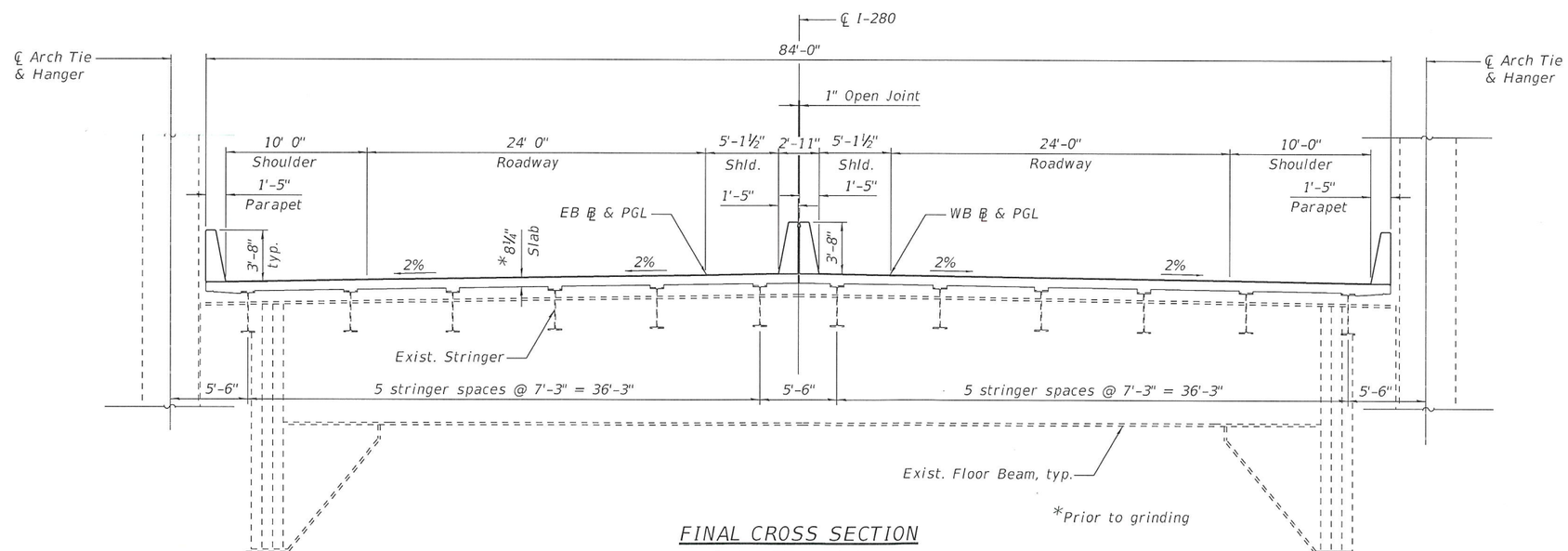

*Prior to grinding

FINAL CROSS SECTION

Section Thru Arch Span
(Looking West)

EASTBOUND STRUCTURE

WESTBOUND STRUCTURE

APPROVED

SEP 26 2019

AS A BASIS FOR PREPARATION OF DETAILED PLANS

FINAL CROSS SECTION
I-280 BRIDGE
OVER THE MISSISSIPPI RIVER
F.A.I. ROUTE 280
SEC. 81-1B,81-1 (F&E) & 81-1D
ROCK ISLAND COUNTY
STATION 41+45.00
STRUCTURE NO. 081-0106

MODEL: $MODELNAME$
FILE NAME: $FILEL$

BURNS McDONNELL

USER NAME = $USER$	DESIGNED - GEK	REVISED -	
	CHECKED - DEF	REVISED -	
PLOT SCALE = N.T.S	DRAWN -	REVISED -	
PLOT DATE = $DATE$	CHECKED -	REVISED -	

$DATE$ $TIME$

STATE OF ILLINOIS
DEPARTMENT OF TRANSPORTATION

SHEET 7 OF 8 SHEETS

F.A.I. RTE.	SECTION	COUNTY	TOTAL SHEETS	SHEET NO.
280	81-1B, 81-1(F&E) & 81-1D	ROCK ISLAND	8	7

CONTRACT NO. 64F78

ILLINOIS | FED. AID PROJECT

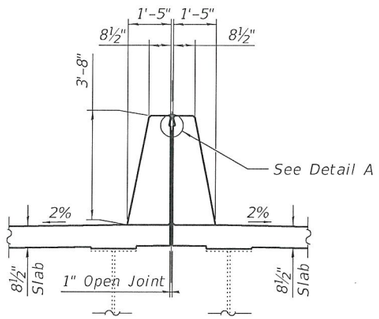

SECTION THRU MEDIAN PARAPET

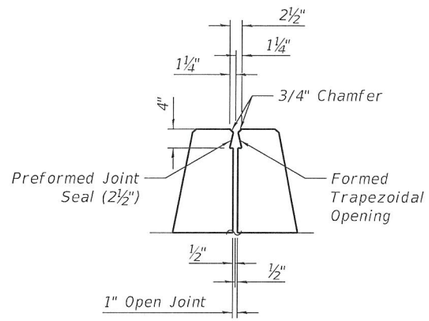

DETAIL A

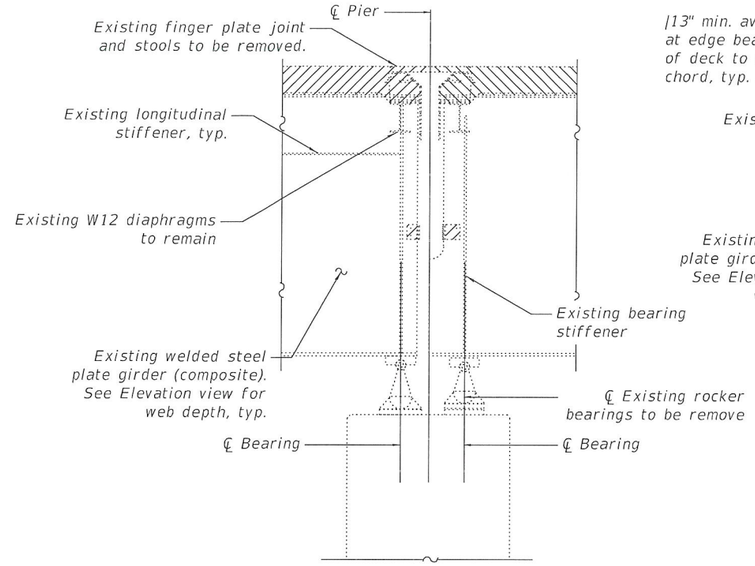

EXISTING SECTION THRU PIERS 3, 7, 10, 17, 20 & 25

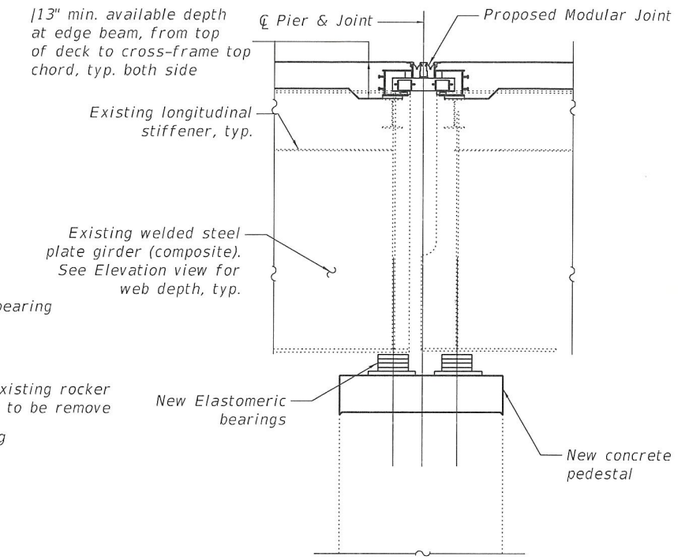

PROPOSED SECTION THRU PIERS 3, 7, 10, 17, 20 & 25

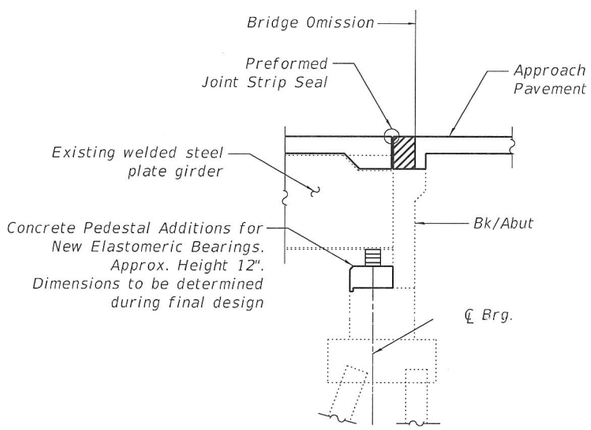

SECTION THRU ABUTMENT, TYP.

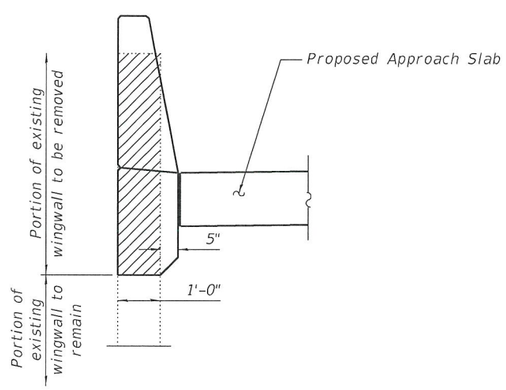

SECTION THRU WINGWALL

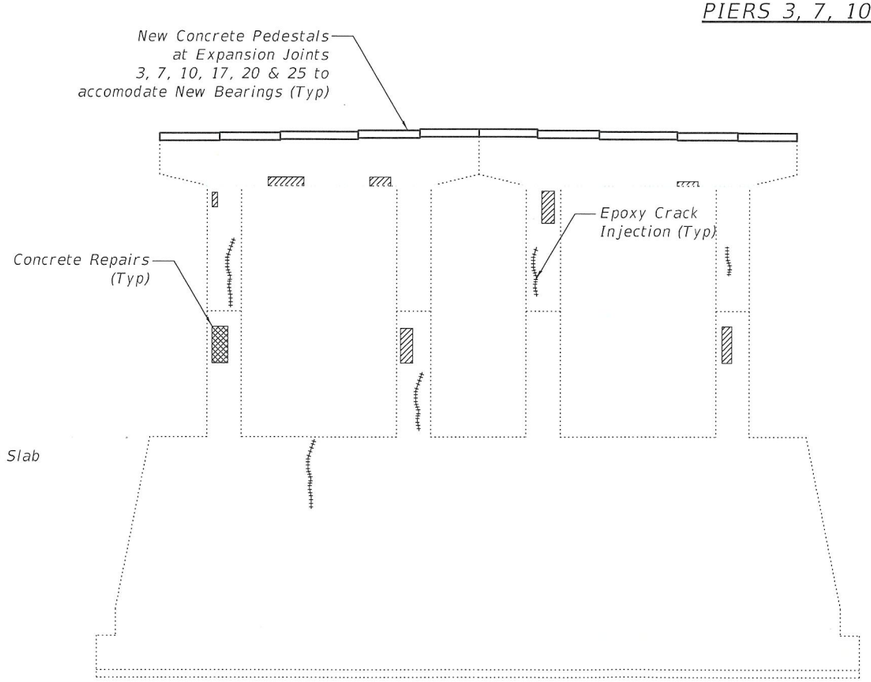

TYPICAL PIER REPAIRS

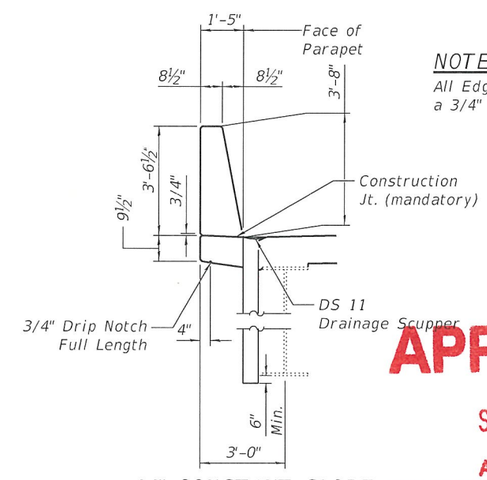

44" CONSTANT-SLOPE CONCRETE PARAPET CONFIGURATION

NOTES:

All Edges shall have a 3/4" Chamfer

APPROVED

SEP 2 6 2019

AS A BASIS FOR PREPARATION OF DETAILED PLANS

LEGEND

- Structural Repair Of Concrete (Depth Greater Than 5")
- Structural Repairs Of Concrete (Depth Equal To Or Less Than 5")
- Epoxy Crack Sealing (Cracks > 1/16" Wide)

MISCELLANEOUS DETAILS
I-280 BRIDGE
OVER THE MISSISSIPPI RIVER
F.A.I. ROUTE 280
SEC. 81-1B,81-1 (F&E) & 81-1D
ROCK ISLAND COUNTY
STATION 41+45.00
STRUCTURE NO. 081-0106

MODEL: $MODELNAME$
FILE NAME: $FILEL$

BURNS McDONNELL

USER NAME = $USER$	DESIGNED - GEK	REVISED -	
	CHECKED - DEF	REVISED -	
PLOT SCALE = N.T.S	DRAWN -	REVISED -	
PLOT DATE = $DATE$	CHECKED -	REVISED -	

$DATE$ $TIME$

STATE OF ILLINOIS
DEPARTMENT OF TRANSPORTATION

SHEET 8 OF 8 SHEETS

F.A.I. RTE.	SECTION	COUNTY	TOTAL SHEETS	SHEET NO.
280	81-1B, 81-1(F&E) & 81-1D	ROCK ISLAND	8	8
		CONTRACT NO. 64F78		
	ILLINOIS	FED. AID PROJECT		