Benchmark: Iron pin 25'± east of existing east abutment, 1'± Lt of ℄ of median, Sta 251+50, Elev. 596.90

Existing Structures: SN 081-0097 (WB) and SN 081-0098 (EB) were built in 1966 as FAI 74 Section 81-2HB-1 at Sta. 416+22.34. In 1991, rehabilitation was was done inlcuding repair for bridge deck, abutment and slopewall, and replacement for fixed bearings, beam pin and link connections, WB north fascia beam and railing, abutment PJS joints and hanger joints. Both structures consist of 4 continous span composite steel rolled beams on H-pile supported multi-column piers and open abutments, skewed at 13°00'45" left hand forward. There are pin and link connections within the beam lines in each end span. Both bridges are 49'-6"± to 52'-6"± o. to o. wide and 236'-6" bk. to bk. abutments. Both existing structures are to be removed and replaced. Traffic is to be maintained using stage construction.

No Salvage

APPROVED

DEC 17 2015

AS A BASIS FOR PREPARATION OF DETAILED PLANS

HIGHWAY CLASSIFICATION

F.A.P. 595 - IL Route 5	F.A.I. 74 - I-74
Functional Class: Other Principal Arterial	Functional Class: Interstate
ADT: 52,150 (2025); 57,900 (2045)	ADT: 42,000 (2025); 46,450 (2045)
ADTT: 2,035 (2025); 2,260 (2045)	ADTT: 2,520 (2025); 2,790 (2045)
DHV: 5,790 (2045)	DHV: 4,645 (2045)
Design Speed: 45 m.p.h.	Design Speed: 70 m.p.h.
Posted Speed: 45 m.p.h.	Posted Speed: 65 m.p.h.
Two-Way Traffic	Two-Way Traffic
Directional Distribution: 50:50	Directional Distribution: 50:50

DESIGN STRESSES

FIELD UNITS

f'c = 4,000 psi (Class BS)
f'c = 3,500 psi (Class SI)
fy = 60,000 psi (Reinforcement)
fy = 50,000 psi (M270 Grade 50)

DESIGN SPECIFICATIONS

AASHTO LRFD Bridge Design Specifications, 7th Edition with 2015 Interim Revisions

LOADING HL-93

Allow 50#/sq. ft. for future wearing surface.

SEISMIC DATA

Seismic Performance Zone (SPZ) = 1
Design Spectral Acceleration at 1.0 sec. (S_{D1}) = 0.062g
Design Spectral Acceleration at 0.2 sec. (S_{DS}) = 0.096g
Soil Site Class = C

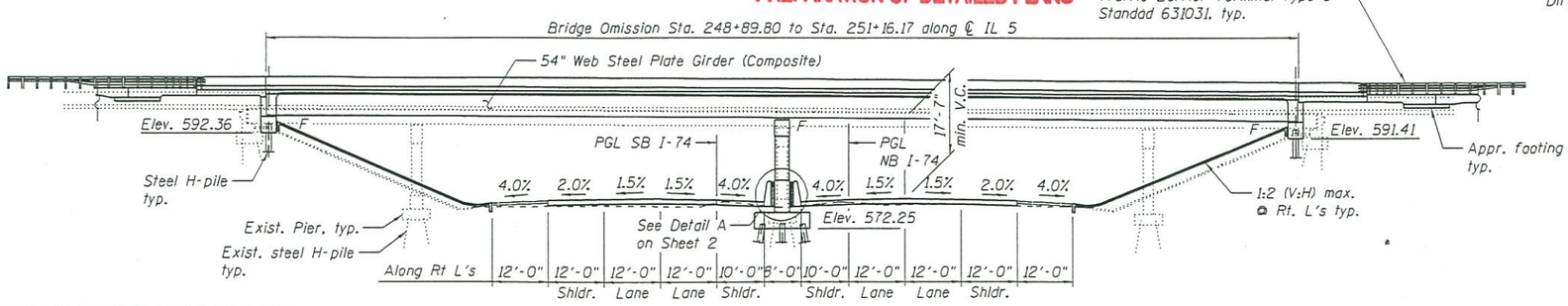

ELEVATION

Notes:

1. Proposed piles should be spaced to avoid existing piles.
2. Typical direction of traffic on the bridge plan is reversed due to the the proposed intersection type.

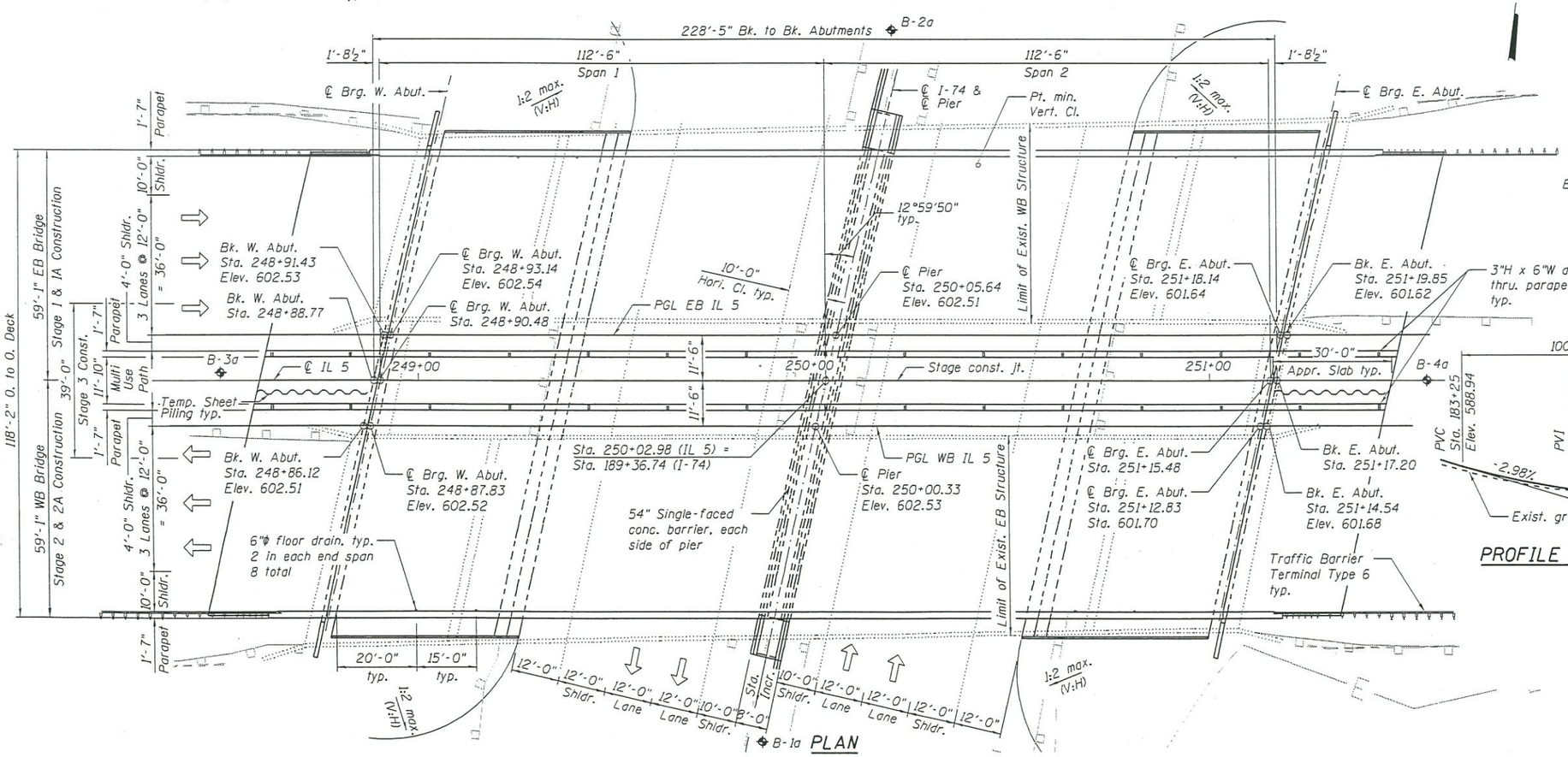

PLAN

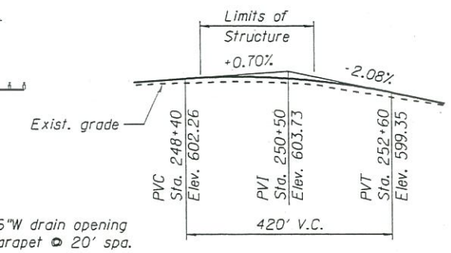

PROFILE GRADE IL 5

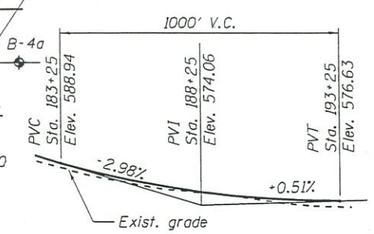

PROFILE GRADE I-74

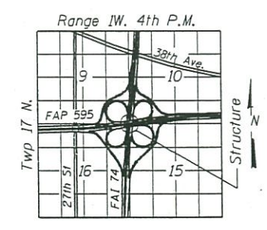

LOCATION SKETCH

GENERAL PLAN
ILLINOIS ROUTE 5 OVER I-74
F.A.P. ROUTE 595 SECTION 142-R
ROCK ISLAND COUNTY
STATION 250+02.98
STRUCTURE NO. 081-0175

amec foster wheeler 8745 W. HIGGINS ROAD SUITE 300 CHICAGO, IL 60631 (773) 693-6030	USER NAME =	DESIGNED - JY	REVISED -	STATE OF ILLINOIS DEPARTMENT OF TRANSPORTATION		F.A.P. RTE.	SECTION	COUNTY	TOTAL SHEETS	SHEET NO.
		CHECKED - MPB	REVISED -			595	142-R	ROCK ISLAND	2	1
	PLOT SCALE = N/A	DRAWN - JY	REVISED -					CONTRACT NO. 64H87		
	PLOT DATE = 12/15/2015	CHECKED - MPB	REVISED -		SHEET NO. 1 OF 2 SHEETS			ILLINOIS FED. AID PROJECT		

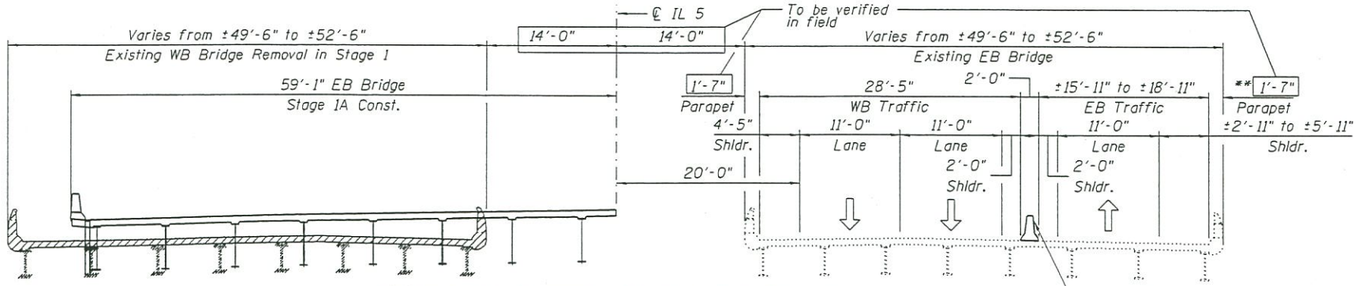

STAGE 1 & 1A REMOVAL AND CONSTRUCTION

(Looking East)

** perpendicular to edge of deck

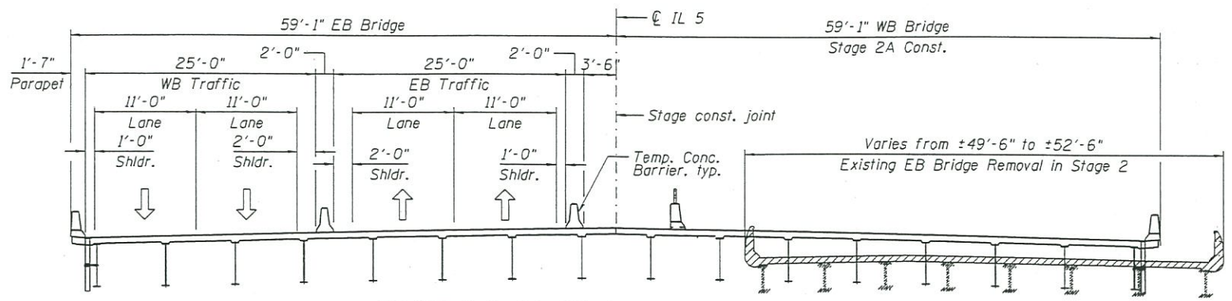

STAGE 2 & 2A REMOVAL AND CONSTRUCTION

(Looking East)

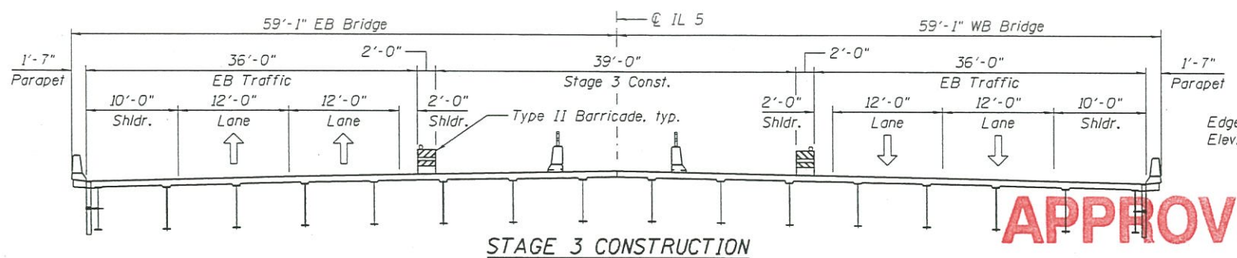

STAGE 3 CONSTRUCTION

(Looking East)

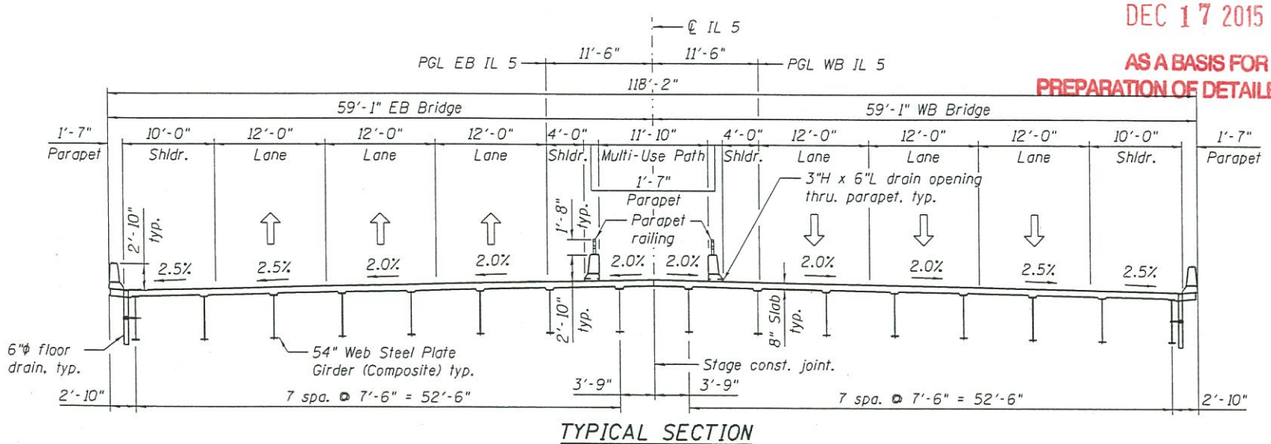

TYPICAL SECTION

(Looking East)

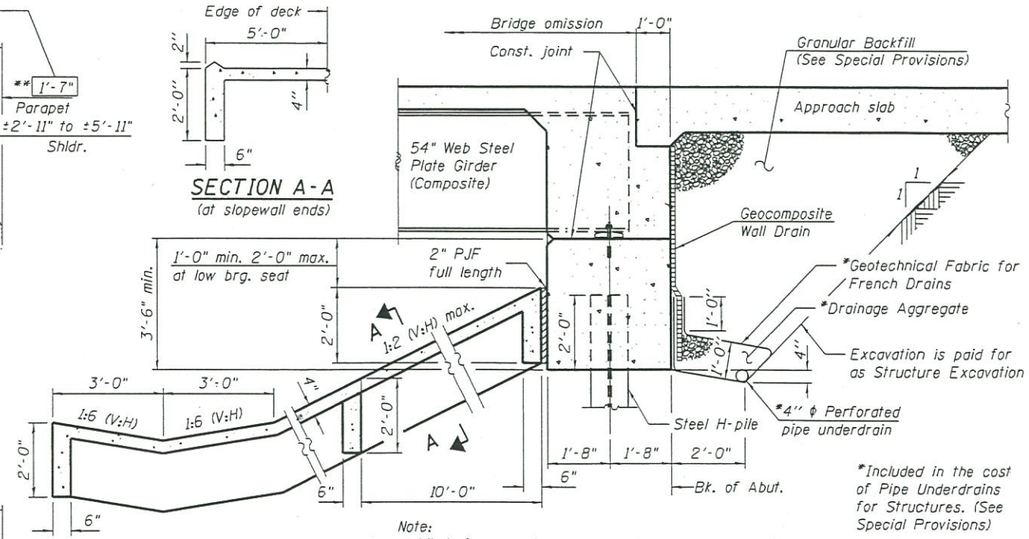

Note:
All drainage system components shall extend to 2'-0" from the end of each wingwall except an outlet pipe shall extend until intersecting with the side slopes. The pipes shall drain into concrete headwalls. (See Article 601.05 of the Standard Specifications and Highway Standard 601101).

SECTION A-A

(at slopewall ends)

SECTION THRU ABUTMENT AND SLOPEWALL

(Horiz. dim. & slopewall slope @ Rt. L's)

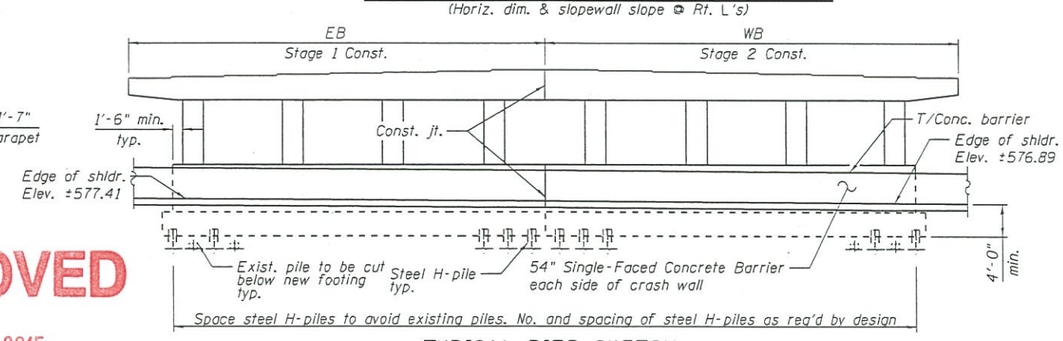

TYPICAL PIER SKETCH

(Looking East)

APPROVED

DEC 17 2015

AS A BASIS FOR PREPARATION OF DETAILED PLANS

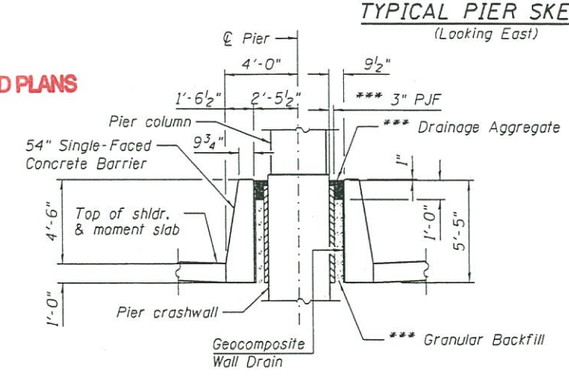

DETAIL A

LEGEND

Removal

*** Included in the cost of 54" Single-Faced Concrete Barrier

CROSS SECTIONS & DETAILS
ILLINOIS ROUTE 5 OVER I-74
F.A.P. ROUTE 595 SECTION 142-R
ROCK ISLAND COUNTY
STATION 250+02.98
STRUCTURE NO. 081-0175

ariec foster wheeler
8745 W. HIGGINS ROAD
SUITE 300
CHICAGO, IL 60631
(773) 693-6030

USER NAME =	DESIGNED - JY	REVISED -	
	CHECKED - MPB	REVISED -	
PLOT SCALE = N/A	DRAWN - JY	REVISED -	
PLOT DATE = 12/15/2015	CHECKED - MPB	REVISED -	

STATE OF ILLINOIS
DEPARTMENT OF TRANSPORTATION

SHEET NO. 2 OF 2 SHEETS

F.A.P. RTE.	SECTION	COUNTY	TOTAL SHEETS	SHEET NO.
595	142-R	ROCK ISLAND	2	2
		CONTRACT NO. 64H87		
		ILLINOIS FED. AID PROJECT		