Benchmark: Southeast bolt of east post on "Exit 241, 1 Mile" sign, Elev. 525.17.

Existing Structure: S.N. 099-0005 originally built in 1956 as F.A. Rte. 77, Section 87-B-1 at Station 1439+24 and reconstructed in 1993 as F.A.I. Rt. 55, Section 87(A, B-1&2, VB&VB-1)R at Station 648+62.79. Structure consists of a three span steel W36 beam superstructure supported by pile bent abutments founded on steel H-piles and concrete wall piers founded on spread footings. 177'-8" back-to-back abutments. 43'-2" out-to-out deck.

Concrete deck and approach slabs to be removed and replaced. The structure will not be stage constructed.

Traffic shifted using crossovers to adjacent S.N. 099-0286 will be used to maintain traffic.

No salvage.

Up to ¼" may be ground off the bridge deck, the bridge approach slabs, and the pavement connectors.

SCOPE OF WORK

1. Remove existing concrete deck, parapets, approach slabs, and expansion joints.
2. Remove tops of abutment backwalls and wingwall stems.
3. Install shear studs on existing steel beams.
4. Construct wingwalls.
5. Construct concrete deck, semi-integral diaphragms, parapets, and approach slabs.

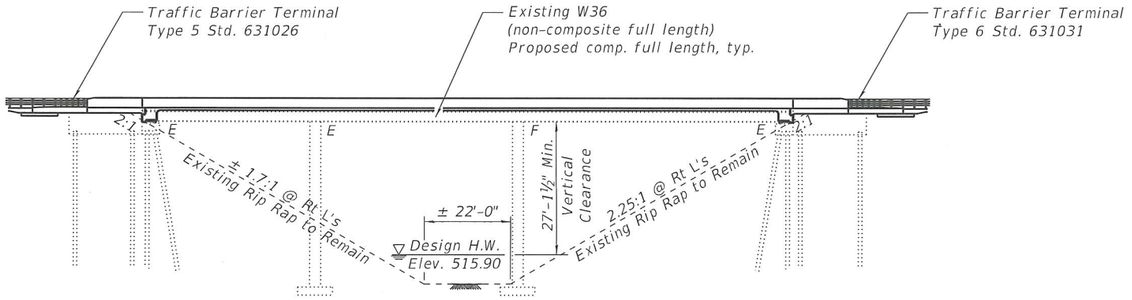

ELEVATION

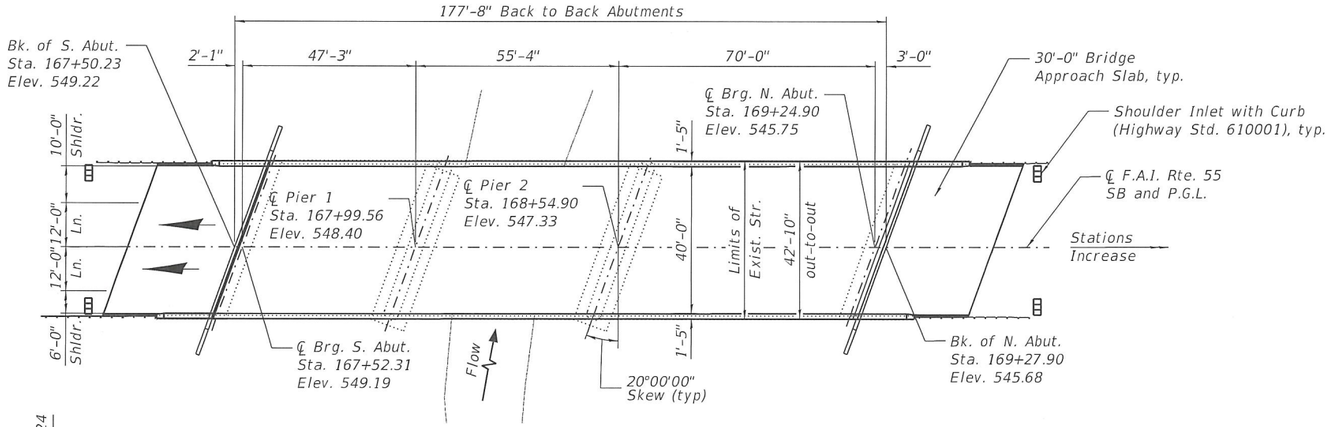

PLAN

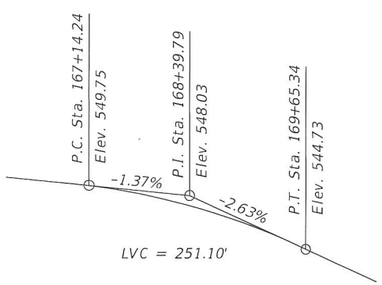

PROFILE GRADE
(along ℄ F.A.I. Rte. 55 SB)

APPROVED
AUG 20 2018
AS A BASIS FOR
PREPARATION OF DETAILED PLANS

LOADING HS20-44 & ALT (New Const.)

No allowance for future wearing surface.

DESIGN SPECIFICATIONS

2002 AASHTO Standard Specifications
for Highway Bridges, 17th Edition

DESIGN STRESSES

FIELD UNITS (New Const.)

f'c = 3,500 psi
f'c = 4,000 psi (Superstructure)
fy = 60,000 psi (Reinforcement)
fy = 50,000 psi (M270 Grade 50)

FIELD UNITS (Existing Const.)

f'c = 3,500 psi (Superstructure)
f'c = 3,500 psi (Piers)
f'c = 2,500 psi (Abutments)
fy = 60,000 psi (Reinforcement)
fy = 50,000 psi (M270 Grade 50)

SEISMIC DATA

Seismic Performance Category (SPC) = A
Horizontal Bedrock Acceleration Coefficient (A) = 0.040g
Site Coefficient (S) = 1.0

HIGHWAY CLASSIFICATION

F.A.I. Rte. 55 - I-55 SB
Functional Class: Interstate
ADT: 27,750 (2017); 36,073 (2032)
DHV: 3,607 (2032) ADTT: 5%
Design Speed: 65 m.p.h.
Posted Speed: 65 m.p.h.
One-Way Traffic
Directional Distribution: 100%

DESIGN SCOUR ELEVATION TABLE

Event / Limit State	Design Scour Elevations (ft.)		
	Pier 1	Pier 2	Item 113
Q100	507.15	507.15	8
Q200	507.15	507.15	
Design	507.15	507.15	

WATERWAY INFORMATION

Drainage Area = 7.3 sq. mi. Low Grade Elev. 533.6 @ Sta. 655+00

Flood	Freq. Yr.	Q C.F.S.	Opening Ft²		Nat. H.W.E.	Head - Ft.		Headwater El.	
			Exist.	Prop.		Exist.	Prop.	Exist.	Prop.
Design	50	1294	353	353	515.9	0.0	0.0	515.9	515.9
Base	100	1488	389	389	516.5	0.0	0.0	516.5	516.5
Overtopping									
Max. Calc.	500	1938	469	469	517.8	0.0	0.0	517.8	517.8

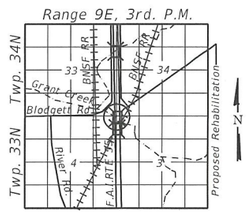

LOCATION SKETCH

GENERAL PLAN & ELEVATION
I-55 SB OVER GRANT CREEK
F.A.I. RTE. 55 - SEC. 2018-049-B
WILL COUNTY
STATION 168+39.79
STRUCTURE NO. 099-0005

MODEL: Default
FILE NAME: pw:\\DCPWAPP1.bkr.mbakercorp.com:prprod\Documents\Projects\ChicagoOffice\IDOT PTB 183-017\Work Order 06\Task 1.1 - 099-0005 TSL\CAD Sheets\099-0005-GENPLAN-SHT

Michael Baker INTERNATIONAL
200 W Adams St., Chicago, IL 60606
Phone: (312) 575-3900 - MBAKERINTL.COM

USER NAME = Joseph.Kauzlarich	DESIGNED - JMK	REVISED -
	DRAWN - DCL	REVISED -
PLOT SCALE = 2.0001 ' / in.	CHECKED - PAT	REVISED -
PLOT DATE = 8/20/2018	DATE - 7/13/2018	REVISED -

STATE OF ILLINOIS
DEPARTMENT OF TRANSPORTATION

GENERAL PLAN
STRUCTURE NO. 099-0005
SHEET 1 OF 2 SHEETS

F.A.I. RTE.	SECTION	COUNTY	TOTAL SHEETS	SHEET NO.
55	2018-049-B		2	1
		CONTRACT NO. 62G98		
	ILLINOIS FED. AID PROJECT			

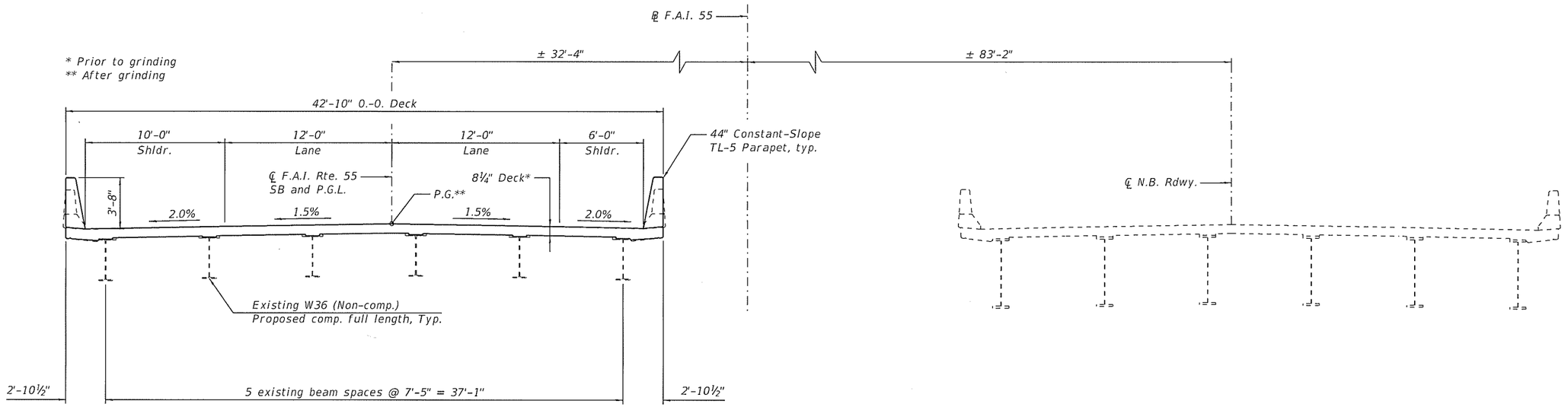

SOUTHBOUND
S.N. 099-0005

NORTHBOUND
S.N. 099-0286
Traffic diverted to this structure during construction on S.N. 099-0005 (using crossovers)

CROSS SECTION
(Looking North)

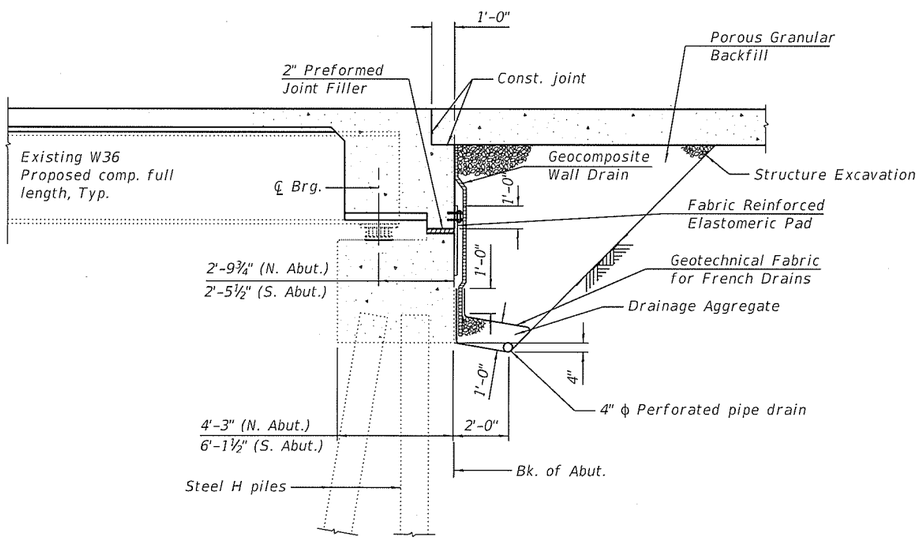

SECTION THRU SEMI-INTEGRAL ABUTMENT
North Abutment Shown, South Abutment Similar
(Horiz. Dimensions @ Rt. L's)

DETAILS
I-55 SB OVER GRANT CREEK
F.A.I. RTE. 55 - SEC. 2018-049-B
WILL COUNTY
STATION 168+39.79
STRUCTURE NO. 099-0005

MODEL: Default
FILE NAME: pw:\\DCPWAPP1.bkr.mbakercorp.com:pwprod\Documents\Projects\ChicagoOffice\IDOT_PTB_183-017\Work Order 06\Task 1.1 - 099-0005 TSL\CAD_Sheets\099-0005-CROSSECTION-SHT

Michael Baker INTERNATIONAL 200 W Adams St., Chicago, IL 60606 Phone: (312) 575-3900 · MBAKERINTL.COM	USER NAME = Joseph.Kauzlarich	DESIGNED - JMK	REVISED -	STATE OF ILLINOIS DEPARTMENT OF TRANSPORTATION	DETAILS STRUCTURE NO. 099-0005
		DRAWN - DCL	REVISED -		
	PLOT SCALE = 2.0000 ' / in.	CHECKED - PAT	REVISED -		
	PLOT DATE = 8/20/2018	DATE - 7/13/2018	REVISED -		SHEET 2 OF 2 SHEETS

F.A.I. RTE.	SECTION	COUNTY	TOTAL SHEETS	SHEET NO.
55	2018-049-B		2	2
		CONTRACT NO. 62G98		
		ILLINOIS FED. AID PROJECT		