Bench Mark: Square on S.E. wingwall of I-80 W.B. bridge S.N. 099-0061. Elev. 576.87

Existing Structure: S.N. 099-0060 (EB) and S.N. 099-0061 (WB) were built in 1964 under F.A.I. Route 80 Project I-IG-80-4(35)134, Section 99-4VB. The structures were repaired in 1990, 1998, 2001, and 2011. The work generally included repair of the concrete deck and substructure, replacement of the expansion joints, waterproofing membrane and bituminous overlay. Existing dual structures consist of a seven span structure composed of a three-span unit, single span, and three-span unit. The reinforced concrete deck is carried by W36 rolled steel beams (composite at the center span) supported by pile bent abutments and multi-column concrete piers founded on steel piles. The approach slabs are supported on timber piles. The Eastbound structure measures 483'-5" back to back of abutments and the Westbound structure measures 477'-1" back to back of abutments. The out to out deck width is 48'-0" at each structure. The entire structure will be removed and replaced.

Stage construction will be utilized to maintain traffic.

No salvage

APPROVED

OCT 01 2014

AS A BASIS FOR

PREPARATION OF DETAILED PLANS

HIGHWAY CLASSIFICATION

F.A.I. Rte. 80 EB	F.A.I. Rte. 80 WB	Gardner St.
Functional Class: Interstate	Functional Class: Interstate	Functional Class: Collector (Urban)
ADT: 43,770 (2009); 52,940 (2030)	ADT: 42,230 (2009); 51,060 (2030)	ADT: 1,750 (2012); 1,609(2032)
ADTT: 12.2% (2009); 12.2% (2030)	ADTT: 12.2% (2009); 12.2% (2030)	ADTT: 5.0% (2012); 5.0% (2032)
DHV: 4,470 (2030)	DHV: 4,470 (2030)	DHV: 195 (2032)
Design Speed: 60 m.p.h.	Design Speed: 60 m.p.h.	Design Speed: 30 m.p.h.
Posted Speed: 55 m.p.h.	Posted Speed: 55 m.p.h.	Posted Speed: 30 m.p.h.
One Way Traffic	One Way Traffic	Two Way Traffic
		Directional Distribution: 50:50

LOADING HL-93

Allow 50#/sq. ft. for future wearing surface.

DESIGN SPECIFICATIONS

2012 AASHTO LRFD Bridge Design Specifications, 6th Edition, with 2013 Interims

DESIGN STRESSES

FIELD UNITS

f'c = 3,500 psi
fy = 60,000 psi (Reinforcement)
fy = 50,000 psi (M270 Grade 50)

SEISMIC DATA

Seismic Performance Zone (SPZ) = 1
Design Spectral Acceleration at 1.0 sec. (S_{D1}) = 0.066g
Design Spectral Acceleration at 0.2 sec. (S_{DS}) = 0.125g
Soil Site Class = C

Notes:

1. Space to miss existing piles.
2. Dimensions @ Rt. L's to Track or Roadway.
3. No free fall drains will be permitted in the span over the tracks or within 10 ft. of cross arms of a railroad pole line.
4. Vertical clearance considers the future widening of I-80 structures.
5. 1:2 at Rt L's
6. Aggregate Column Ground Improvements quantity, diameter, and layout to be determined in design.
7. Roadway taper, Sta. 712+63.66, offset 49.5' Lt

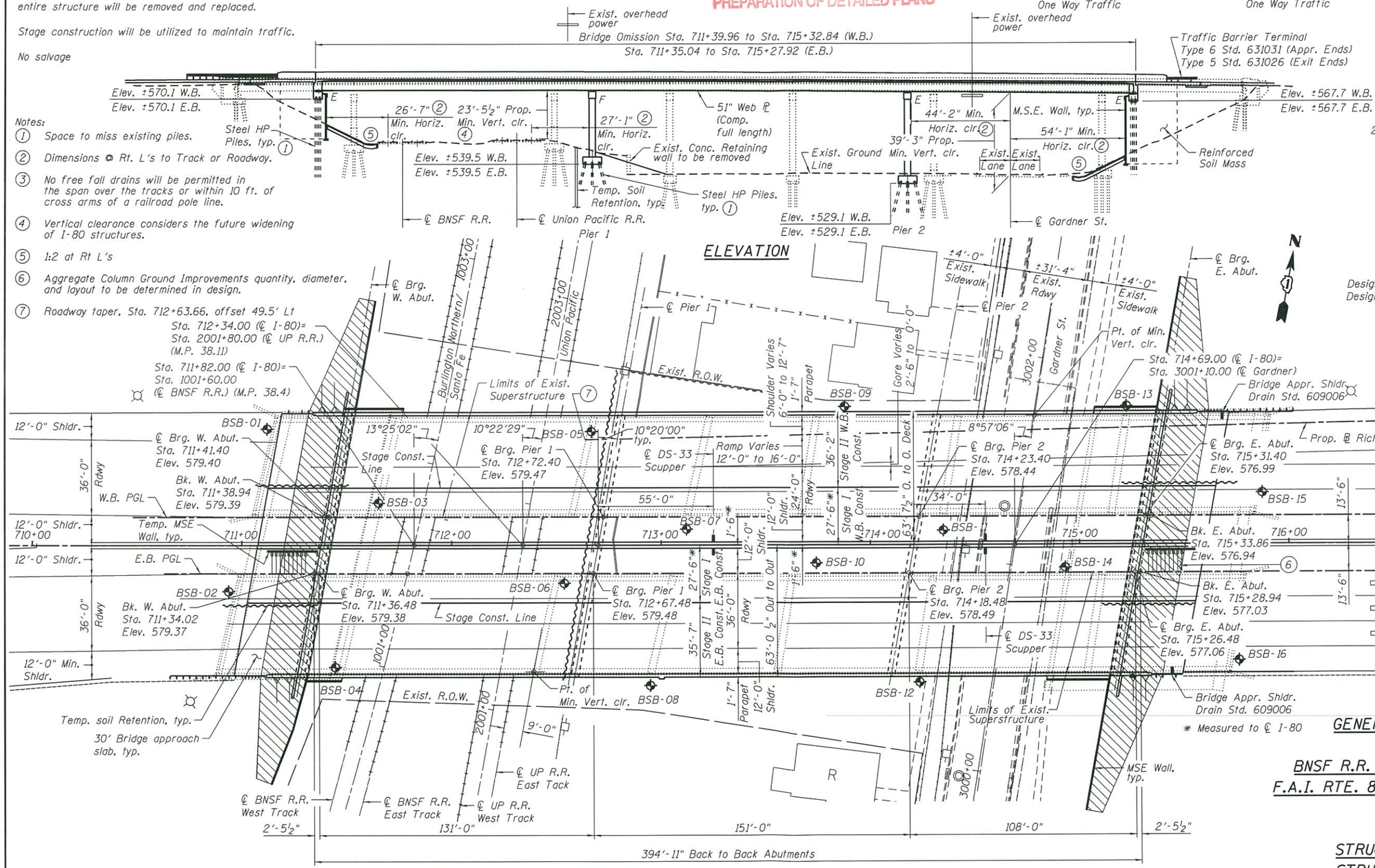

* Measured to ℄ I-80

LEGEND:

- Exist. Light Pole
- Boring
- Exist. Lighting Power Pole
- Approximate Limits of Aggregate Column Ground Improvements and Reinforced Soil Mass

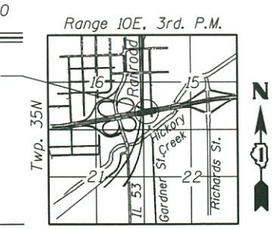

LOCATION SKETCH

GENERAL PLAN AND ELEVATION
I-80 OVER
BNSF R.R. AND UP R.R. AND GARDNER ST.
F.A.I. RTE. 80 - SEC. 2013-008B & 2013-009B
WILL COUNTY
STATION 714+69.01
STRUCTURE NO. 099-0902 (E.B.)
STRUCTURE NO. 099-0903 (W.B.)

HBP Illinois Partners	USER NAME = lkalita	DESIGNED - ACF	REVISED
		CHECKED - MRI	REVISED
	PLOT SCALE = 0.16667 ' / in.	DRAWN - LK	REVISED
	PLOT DATE = 9/17/2014	CHECKED - ACF	REVISED

STATE OF ILLINOIS
DEPARTMENT OF TRANSPORTATION

SHEET NO. 1 OF 5 SHEETS

F.A.I. RTE.	SECTION	COUNTY	TOTAL SHEETS	SHEET NO.
80	2013-008B & 2013-009B	WILL	5	
	CONTRACT NO. 60W34 & 60W35			
	ILLINOIS FED. AID PROJECT			

pw:\\hntbw356.hntb.org:P*Great_Lakes\Documents\Chicago Projects\46341 I-80\Phase II- Near Term Improvement (Group A)\Design\CADD\Structure (TS&L) Sheets\0990902-0990903-60W34-60W35-TSL.dgn

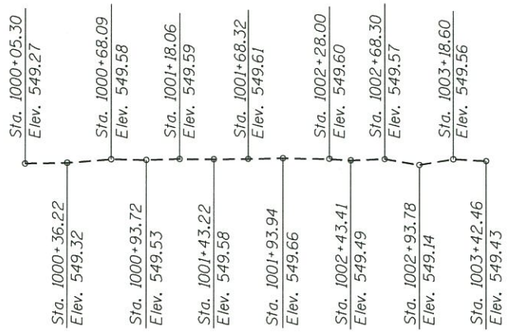

PROFILE GRADE EXIST. BNSF R.R.

(Top of Rail @ East Track)

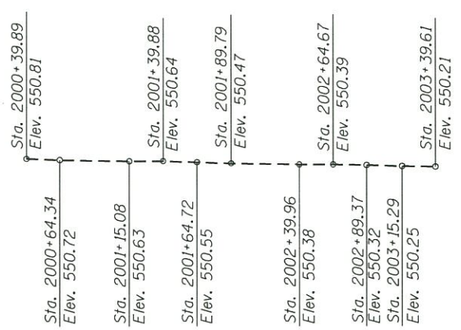

PROFILE GRADE EXIST. UNION PACIFIC R.R.

(Top of Rail @ East Track)

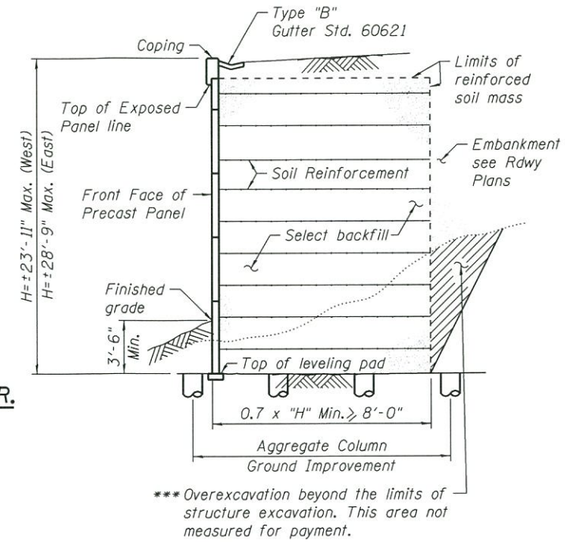

*** Overexcavation beyond the limits of structure excavation. This area not measured for payment.

SECTION THRU M.S.E. WALL

(Horiz. dim. @ Rt. L's)

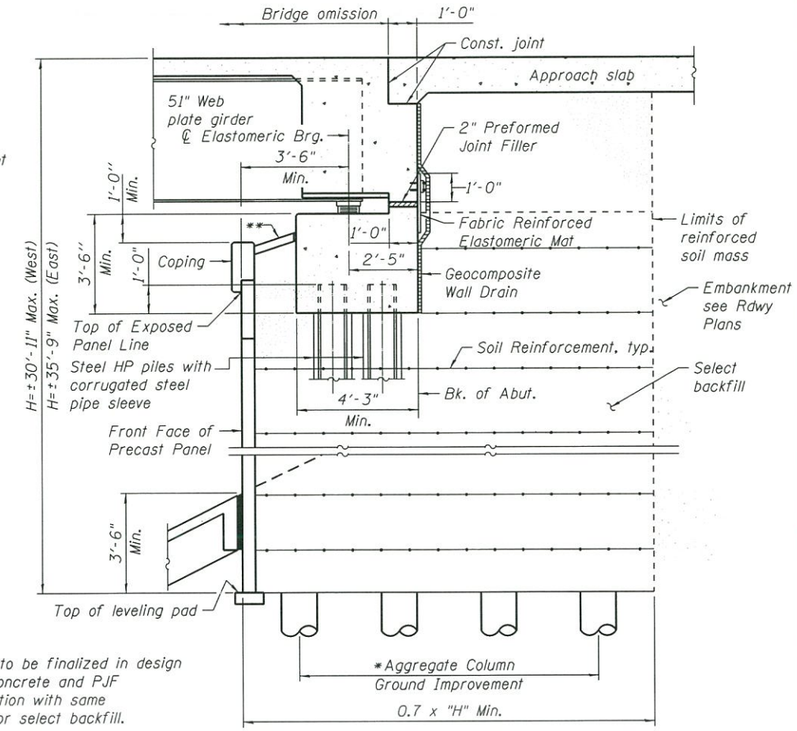

* Number & spacing to be finalized in design
** Seal coping with concrete and PJF
*** Backfill overexcavation with same material as used for select backfill.

SECTION THRU ABUTMENT

(Horiz. dim. @ Rt. L's)

APPROVED

OCT 01 2014

AS A BASIS FOR PREPARATION OF DETAILED PLANS

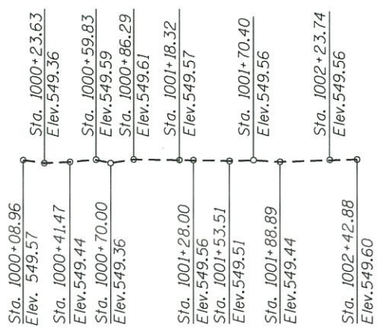

PROFILE GRADE EXIST. BNSF R.R.

(Top of Rail @ West Track)

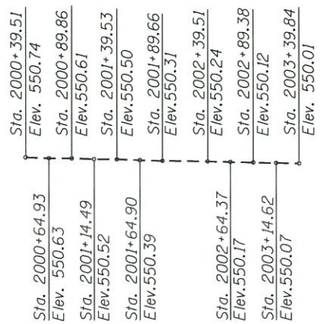

PROFILE GRADE EXIST. UNION PACIFIC R.R.

(Top of Rail @ West Track)

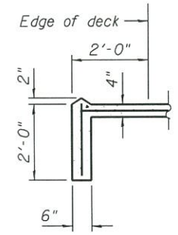

SECTION A-A

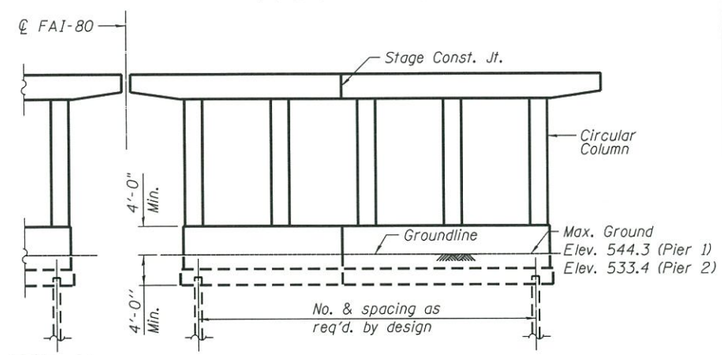

PIER SKETCH

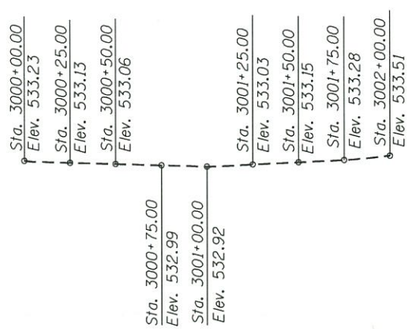

PROFILE GRADE EXIST. GARDNER ST.

(Along ℄ Roadway)

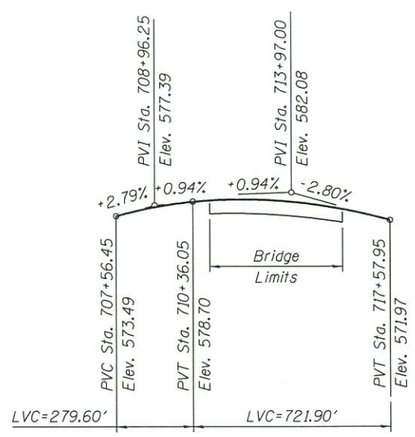

PROFILE GRADE PROP. I-80

(Along PGL of E.B. & W.B. Roadway)

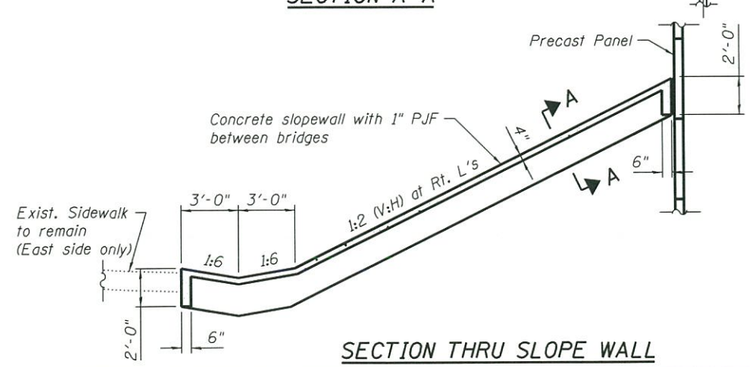

SECTION THRU SLOPE WALL

DETAILS
I-80 OVER
BNSF R.R. AND UP R.R. AND GARDNER ST.
F.A.I. RTE. 80 - SEC. 2013-008B & 2013-009B
WILL COUNTY
STATION 714+69.01
STRUCTURE NO. 099-0902 (E.B.)
STRUCTURE NO. 099-0903 (W.B.)

USER NAME = lkalita	DESIGNED - ACF	REVISED	
	CHECKED - MRI	REVISED	
PLOT SCALE = 0.16667 ' / in.	DRAWN - LK	REVISED	
PLOT DATE = 9/17/2014	CHECKED - ACF	REVISED	

STATE OF ILLINOIS
DEPARTMENT OF TRANSPORTATION

SHEET NO. 2 OF 5 SHEETS

F.A.I. RTE.	SECTION	COUNTY	TOTAL SHEETS	SHEET NO.
80	2013-008B & 2013-009B	WILL	5	
CONTRACT NO. 60W34 & 60W35				
ILLINOIS FED. AID PROJECT				

pw:\\hntbw356.hntb.org:PW\Great_Lakes\Documents\Chicago Projects\46314 I-80\Phase II- Near Term Improvement (Group A)\Design\CADD\Structure (TS&L) Sheets\0990902-0990903-60W34-60W35-TSL.dgn

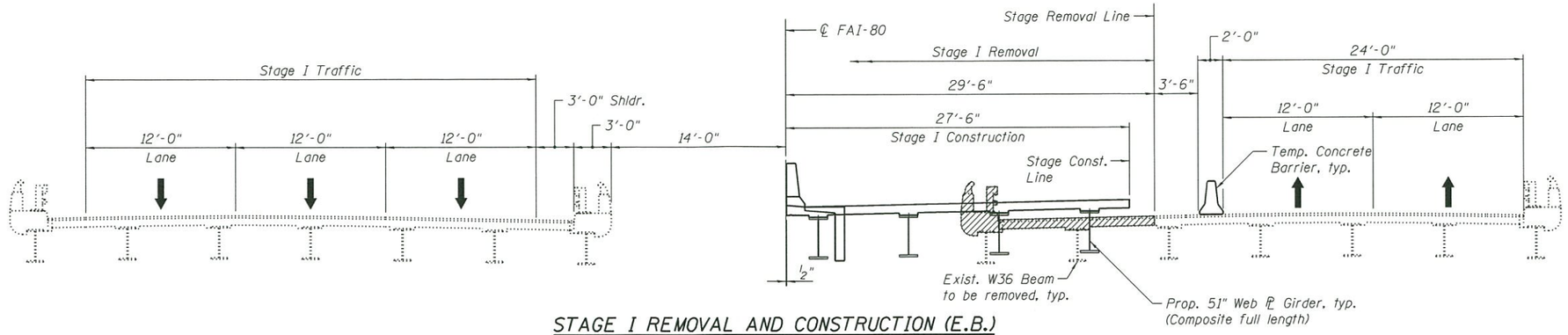

STAGE I REMOVAL AND CONSTRUCTION (E.B.)

(Looking East)

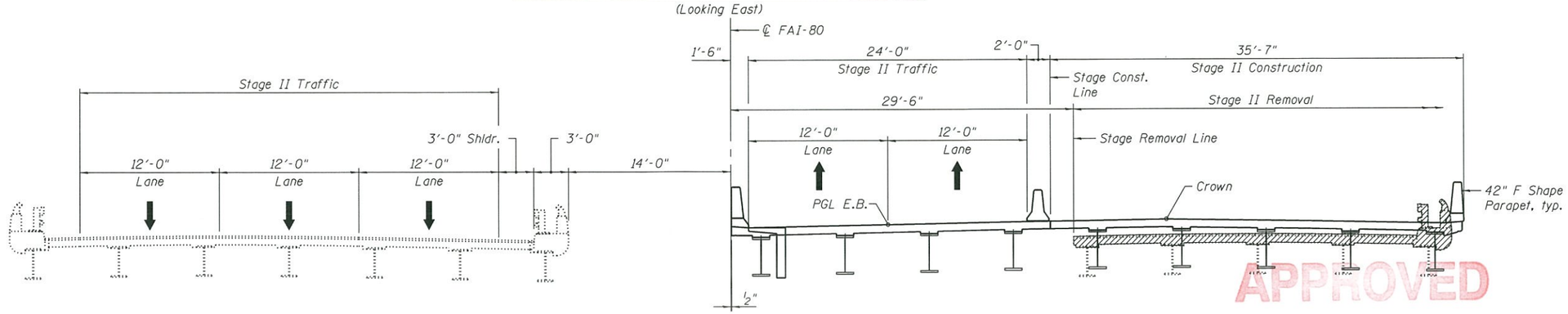

STAGE II & III REMOVAL AND CONSTRUCTION (E.B.)

(Looking East)

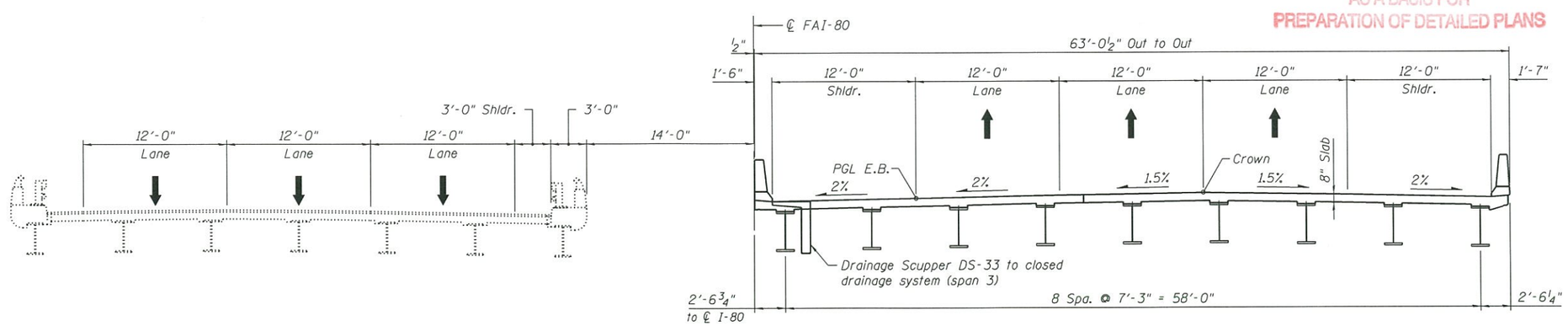

FINAL CONTRACT 60W34

(Looking East)

APPROVED

OCT 01 2014

AS A BASIS FOR PREPARATION OF DETAILED PLANS

DETAILS

I-80 OVER

BNSF R.R. AND UP R.R. AND GARDNER ST.

F.A.I. RTE. 80 - SEC. 2013-008B & 2013-009B

WILL COUNTY

STATION 714+69.01

STRUCTURE NO. 099-0902 (E.B.)

STRUCTURE NO. 099-0903 (W.B.)

HBP Illinois Partners	USER NAME = lkalita	DESIGNED - ACF	REVISED
		CHECKED - MRI	REVISED
	PLOT SCALE = 0.16667 ' / in.	DRAWN - LK	REVISED
	PLOT DATE = 9/17/2014	CHECKED - ACF	REVISED

STATE OF ILLINOIS
DEPARTMENT OF TRANSPORTATION

SHEET NO. 3 OF 5 SHEETS

F.A.I. RTE.	SECTION	COUNTY	TOTAL SHEETS	SHEET NO.
80	2013-008B & 2013-009B	WILL	5	
CONTRACT NO. 60W34 & 60W35				
ILLINOIS	FED. AID PROJECT			

pw:\\hntbw356.hntb.org:PWGreat_Lakes\Documents\Chicago Projects\46314 I-80\Phase II- Near Term Improvement (Group A)\Design\CADD\Structure (TS&L) Sheets\0990902-0990903-60W34-60W35-TSL.dgn

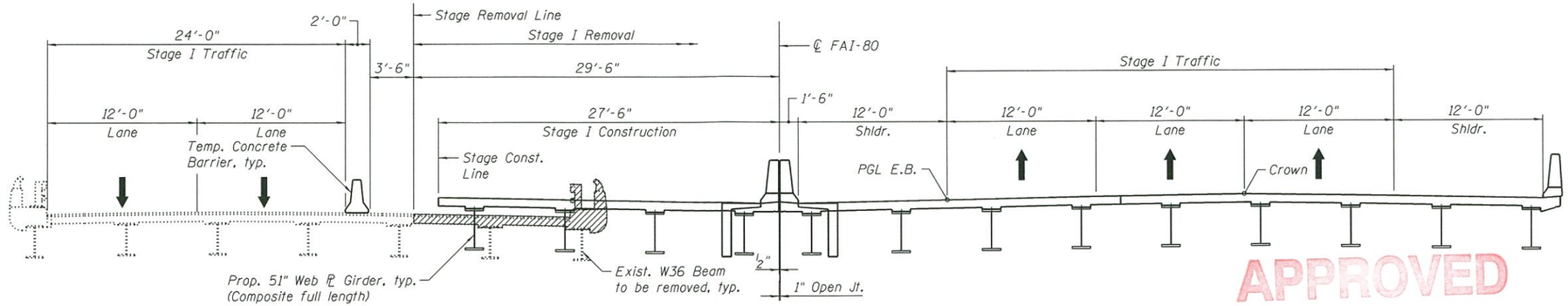

STAGE I REMOVAL AND CONSTRUCTION (W.B.)

(Looking East)

APPROVED

OCT 01 2014

AS A BASIS FOR PREPARATION OF DETAILED PLANS

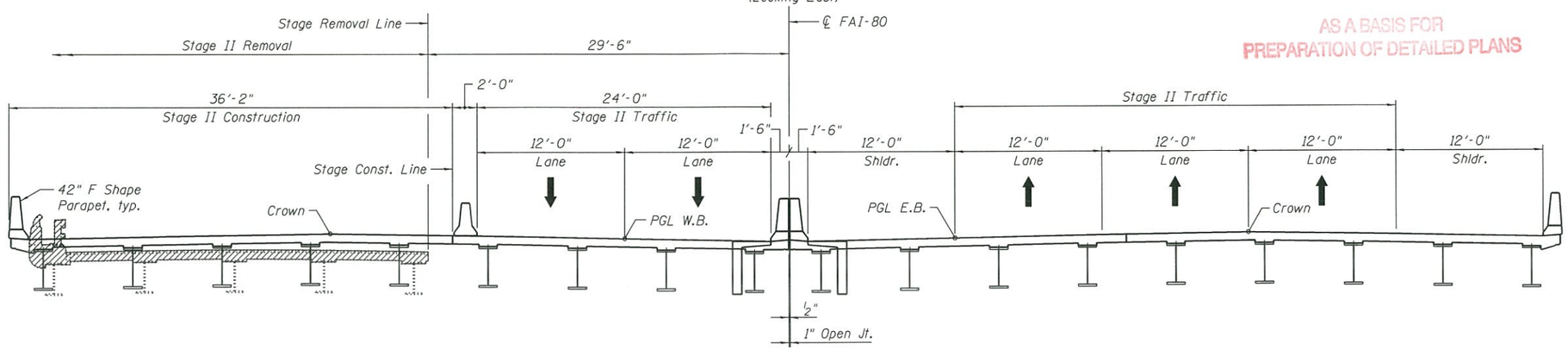

STAGE II & III REMOVAL AND CONSTRUCTION (W.B.)

(Looking East)

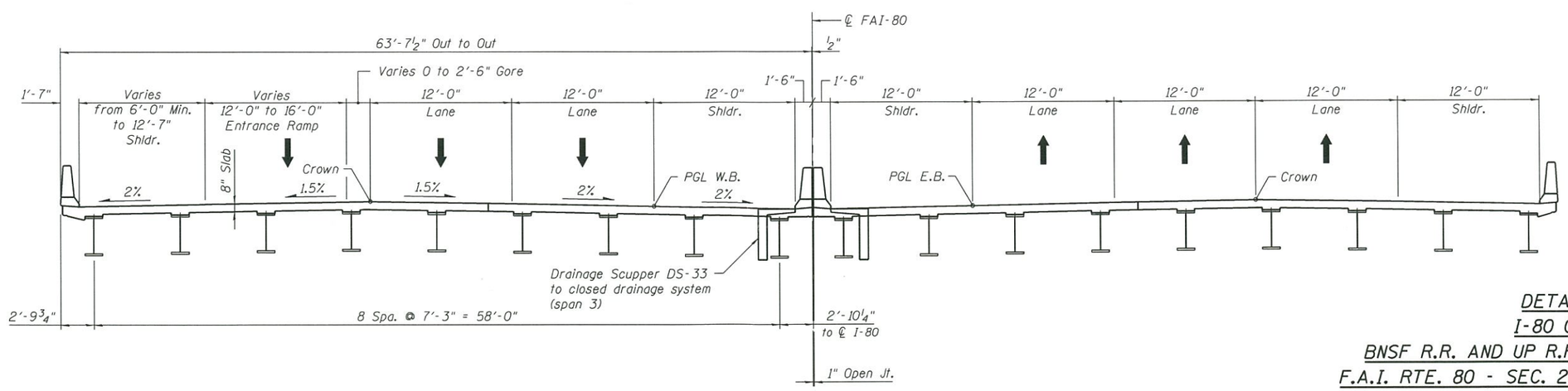

FINAL CONTRACT 60W35

(Looking East)

DETAILS
I-80 OVER
BNSF R.R. AND UP R.R. AND GARDNER ST.
F.A.I. RTE. 80 - SEC. 2013-008B & 2013-009B
WILL COUNTY
STATION 714+69.01
STRUCTURE NO. 099-0902 (E.B.)
STRUCTURE NO. 099-0903 (W.B.)

HBP Illinois Partners	USER NAME = lkalita	DESIGNED - ACF	REVISED
		CHECKED - MRI	REVISED
	PLOT SCALE = 0.16667 ' / in.	DRAWN - LK	REVISED
	PLOT DATE = 9/17/2014	CHECKED - ACF	REVISED

STATE OF ILLINOIS
DEPARTMENT OF TRANSPORTATION

SHEET NO. 4 OF 5 SHEETS

F.A.I. RTE.	SECTION	COUNTY	TOTAL SHEETS	SHEET NO.
80	2013-008B & 2013-009B	WILL	5	
CONTRACT NO. 60W34 & 60W35				
		ILLINOIS	FED. AID PROJECT	

pw:\\hntbw356.hntb.org:P#Great_Lakes\Documents\Chicago Projects\46314 I-80\Phase II- Near Term Improvement (Group A)\Design\CADD\Structure (TS&L) Sheets\0990902-0990903-60W34-60W35-TSL.dgn

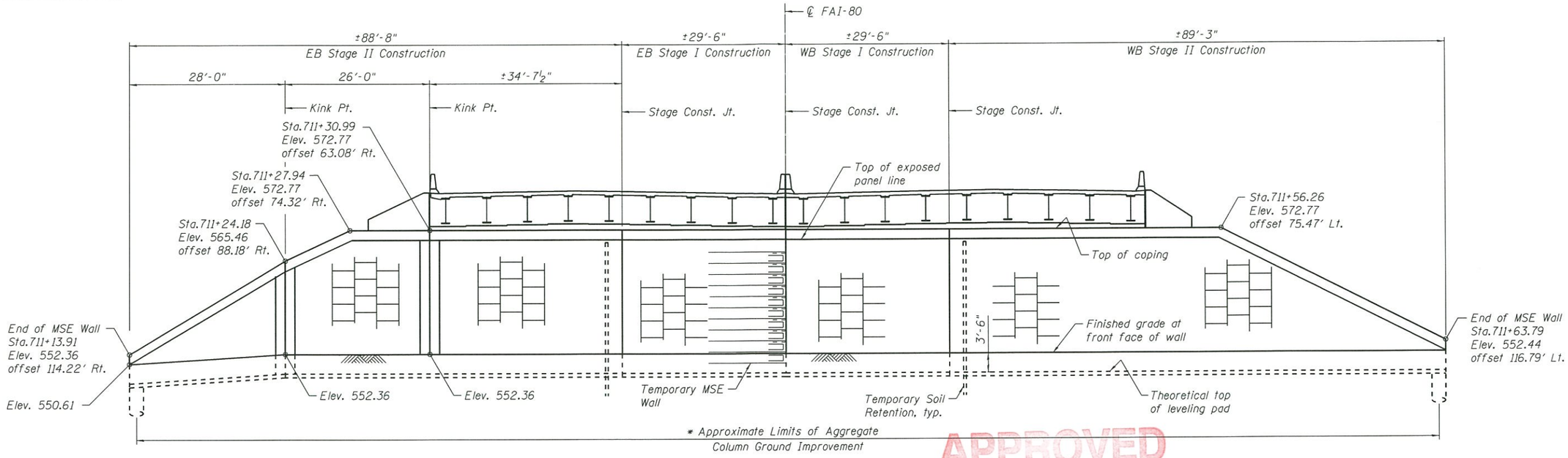

WEST ABUTMENT WALL

Developed elevation along front face

APPROVED
OCT 01 2014
AS A BASIS FOR
PREPARATION OF DETAILED PLANS

Notes:
1. Stations and offsets are measured from ℄ FAI-80 to the front face of precast panels.
2. Dimensions are measured along the front face of precast panels.

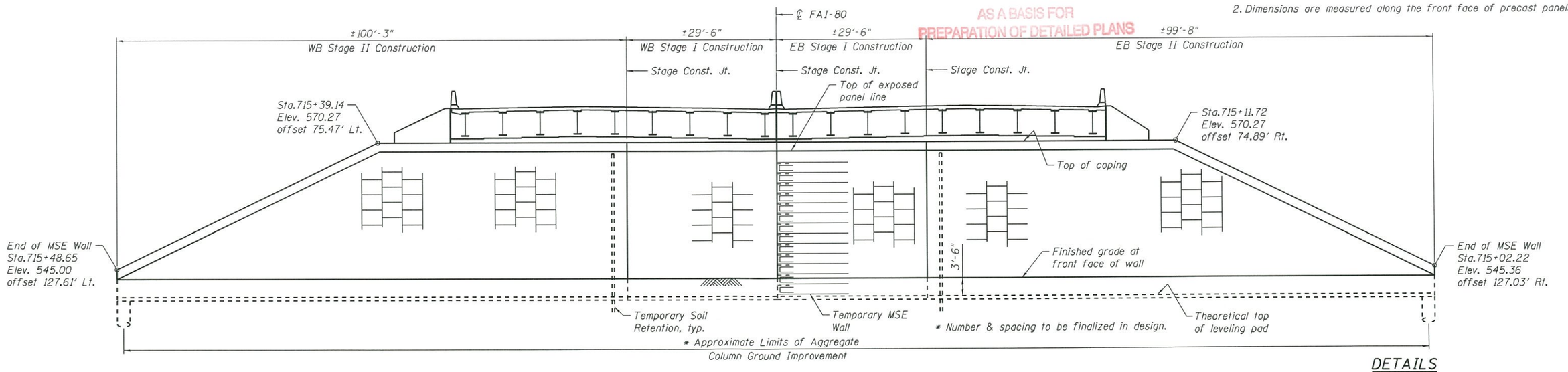

EAST ABUTMENT WALL

Developed elevation along front face

DETAILS
I-80 OVER
BNSF R.R. AND UP R.R. AND GARDNER ST.
F.A.I. RTE. 80 - SEC. 2013-008B & 2013-009B
WILL COUNTY
STATION 714+69.01
STRUCTURE NO. 099-0902 (E.B.)
STRUCTURE NO. 099-0903 (W.B.)

HBP Illinois Partners	USER NAME = lkalita	DESIGNED - ACF	REVISED
		CHECKED - MRI	REVISED
	PLOT SCALE = 0.16667 ' / in.	DRAWN - LK	REVISED
	PLOT DATE = 9/17/2014	CHECKED - ACF	REVISED

STATE OF ILLINOIS
DEPARTMENT OF TRANSPORTATION

SHEET NO. 5 OF 5 SHEETS

F.A.I. RTE.	SECTION	COUNTY	TOTAL SHEETS	SHEET NO.
80	2013-008B & 2013-009B	WILL	5	
CONTRACT NO. 60W34 & 60W35				
ILLINOIS FED. AID PROJECT				

pw:\\hntbw356.hntb.org:P#Great_Lakes\Documents\Chicago Projects\46314 I-80\Phase II - Near Term Improvement (Group A)\Design\CADD\Structure (TS&L) Sheets\0990902-0990903-60W34-60W35-TSL.dgn