Bench Mark: Set "X" on east barrier wall of I-90 at ℄ of Adams Street. Elev. 581.17.

Existing Structure: Existing Retaining Wall 17. Constructed in 1957 under F.A.I. Route 2, Section 0101.6-2P. Cast-in-place concrete retaining wall on timber piles and spread footing that measures 122'-0" from Adams Street NW Wingwall north to Monroe Street. Maximum height from top of wall to bottom of footing measures 11'-9 3/8". The existing retaining wall is to be removed and replaced.

Traffic on Adams Exit Ramp will be detoured during construction.

No Salvage.

Notes:

1.) Wall offsets are measured from the ℄ of Adams Exit Ramp to the front face of cast-in-place fascia panels.
2.) C denotes Construction Joint
3.) E denotes Expansion Joint
4.) F.F. denotes Front Face.
5.) B.F. denotes Back Face.
6.) Wall to be built along straight chords between kink points, construction joints, and expansion joints.
7.) Soldier Pile section, shaft diameter, spacing and tip elevation to be determined during final design.
8.) Proposed drainage information shown is conceptual and will be determined during final design.

SUGGESTED SEQUENCE OF CONSTRUCTION

1.) Install temporary soil retention system along ramp.
2.) Remove portion of Existing Retaining Wall 17 that is in conflict with the proposed drilled shafts.
3.) Drill shafts and install soldier piles.
4.) Remove portion of Existing Retaining Wall 17 in front of the proposed wall and excavate to install timber lagging.
5.) Construct concrete fascia panels, cap, and parapet.

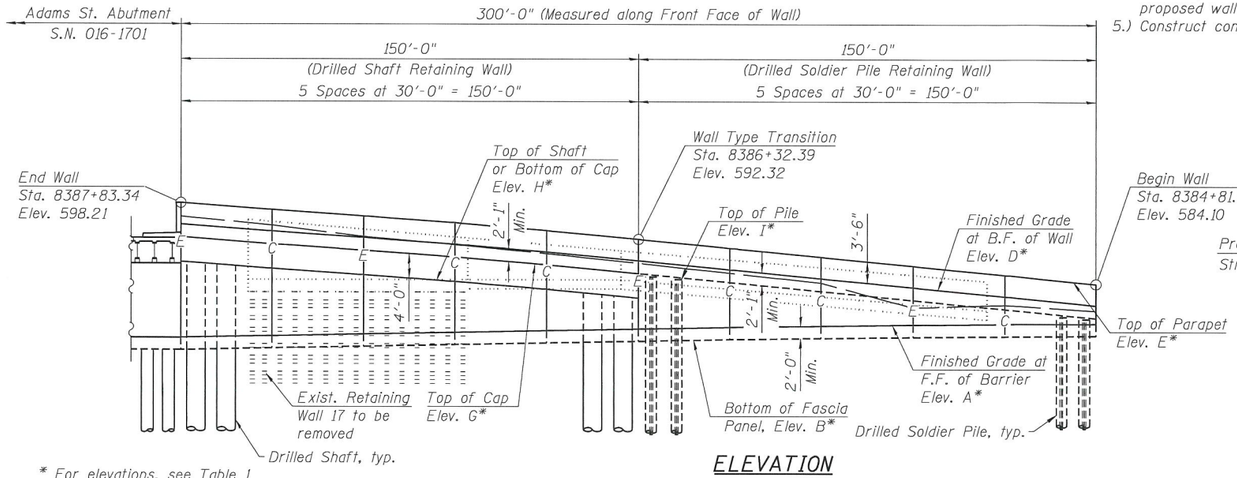

* For elevations, see Table 1 on Sheet 3 of 3.

ELEVATION

(Looking West at F.F. of Wall, Proposed Concrete Barrier not shown for clarity.)

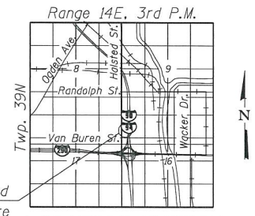

LOCATION SKETCH

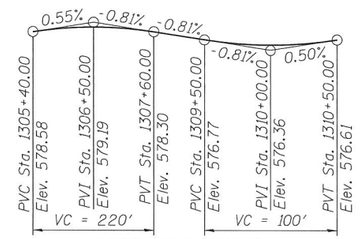

PROFILE GRADE

(℄ Ramp SW)

CURVE DATA

(Adams Exit Ramp)
Prop. Curve P-ADM-SX-1
P.I. Sta. = 8386+35.08
Δ = 6° 41' 46" (LT)
D = 1° 49' 39"
R = 3,135.00'
T = 183.40'
L = 366.39'
E = 5.36'
e = 2.00%
T.R. = 49'
S.E. Run = 97'
P.C. Sta. = 8384+51.68
P.T. Sta. = 8388+18.07

DESIGN STRESSES

FIELD UNITS

f'c = 7,000 psi (Drilled Shafts)**
f'c = 3,500 psi (All other concrete)
fy = 60,000 psi (Reinforcement)

SOLDIER PILES

fy = 50,000 psi (AASHTO M270 Gr. 50)

** Final concrete strength will be determined during final design

HIGHWAY CLASSIFICATION

Adams Exit Ramp
Functional Class: Interstate
ADT: 1,900 (2012); 5,000 (2040)
ADTT: 60 (2012); 0 (2040)
DHV: 360 (2040)
Design Speed: 30 m.p.h.
Posted Speed: 30 m.p.h.
One-Way Traffic
Directional Distribution: 100%

Ramp SW
Functional Class: Interstate
ADT: 24,500 (2012); 23,000 (2040)
ADTT: 907 (2012); 851 (2040)
DHV: 1,720 (2040)
Design Speed: 35 m.p.h.
Posted Speed: 35 m.p.h.
One-Way Traffic
Directional Distribution: 100%

DESIGN SPECIFICATIONS

2017 AASHTO LRFD Bridge Design Specifications 8th Edition

WALL DEFLECTION CRITERIA:

Maximum total lateral wall deflection at top of wall: 1 inch.

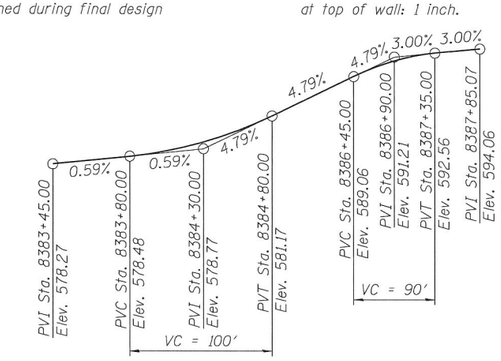

PROFILE GRADE

(℄ Adams Exit Ramp)

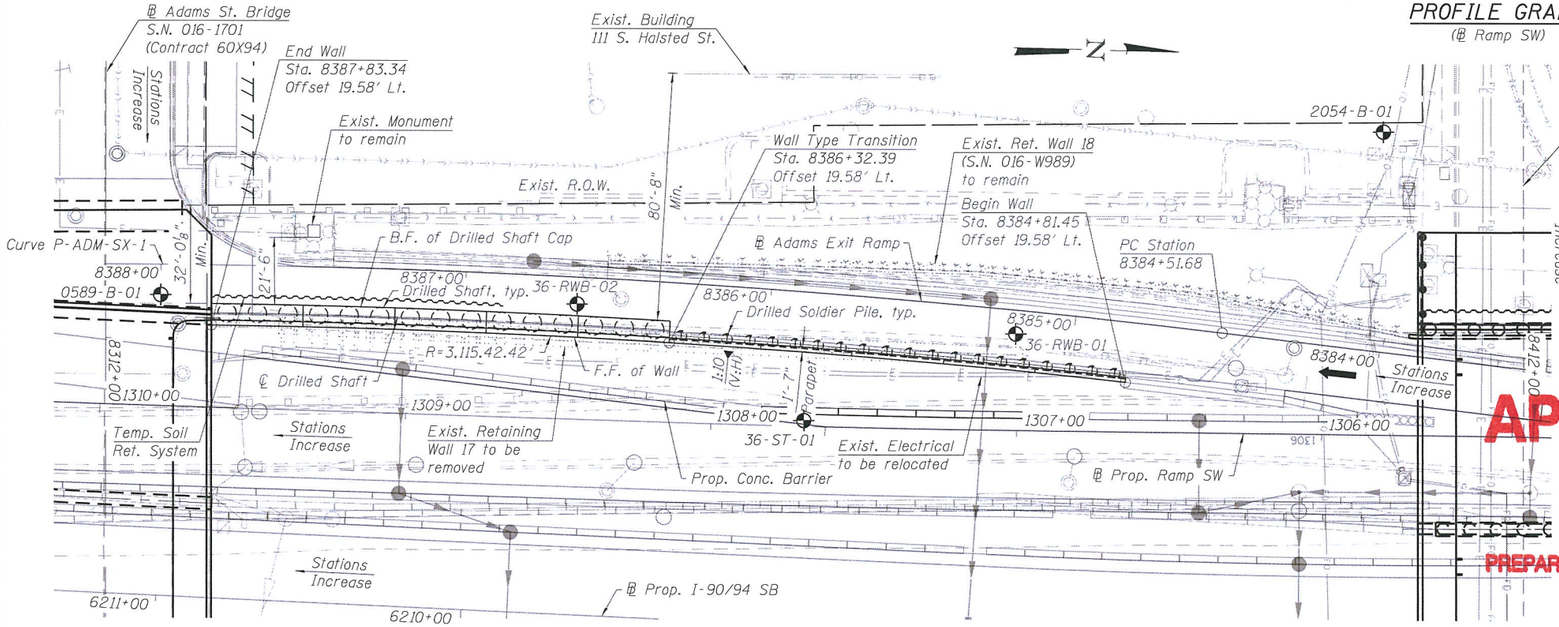

PLAN

LEGEND:

Ex. Chain Link Fence	— X — X —	Soil Boring	
Combined Sewer		Existing Catch Basin	
Electric	—E—	Proposed Catch Basin	
Ex. Storm Sewer		Existing Manhole	
Prop. Storm Sewer		Proposed Manhole	
Ex. Fiber Optic	—FO—	Proposed Inlet	
Ex. ITS Cable			

APPROVED
JUL 24 2019
AS A BASIS FOR PREPARATION OF DETAILED PLANS

GENERAL PLAN
RETAINING WALL 36 ALONG ADAMS EXIT RAMP
F.A.I. RTE. 90/94 (KENNEDY EXPRESSWAY)
SECTION 2014-015 R&B-R
COOK COUNTY
STATION 8384+81.45 TO STATION 8387+83.34
STRUCTURE NO. 016-1825

TranSystems

USER NAME = wjcolletti	DESIGNED - WJC	REVISED -
	CHECKED - JM/MDS	REVISED -
PLOT SCALE = 48.0000 ' / in.	DRAWN - WJC	REVISED -
PLOT DATE = 5/24/2019	CHECKED - JM/MDS	REVISED -

STATE OF ILLINOIS
DEPARTMENT OF TRANSPORTATION

SHEET NO. 1 OF 3 SHEETS

F.A.I. RTE.	SECTION	COUNTY	TOTAL SHEETS	SHEET NO.
90/94	2014-015 R&B-R	COOK	3	1
		CONTRACT NO. 60X94		
		ILLINOIS FED. AID PROJECT		

3:33:55 PM - pw:\\AECOM-NA-AWS\aecomonline.local:AECOM.DS02_NA\Documents\01 Americas\Transportation\60269338 Circle\Phase_I\000_CAD\008_Structural\Structure_016-1825\TSL\Sheets\016I825-60X94-SHT-TSL-001

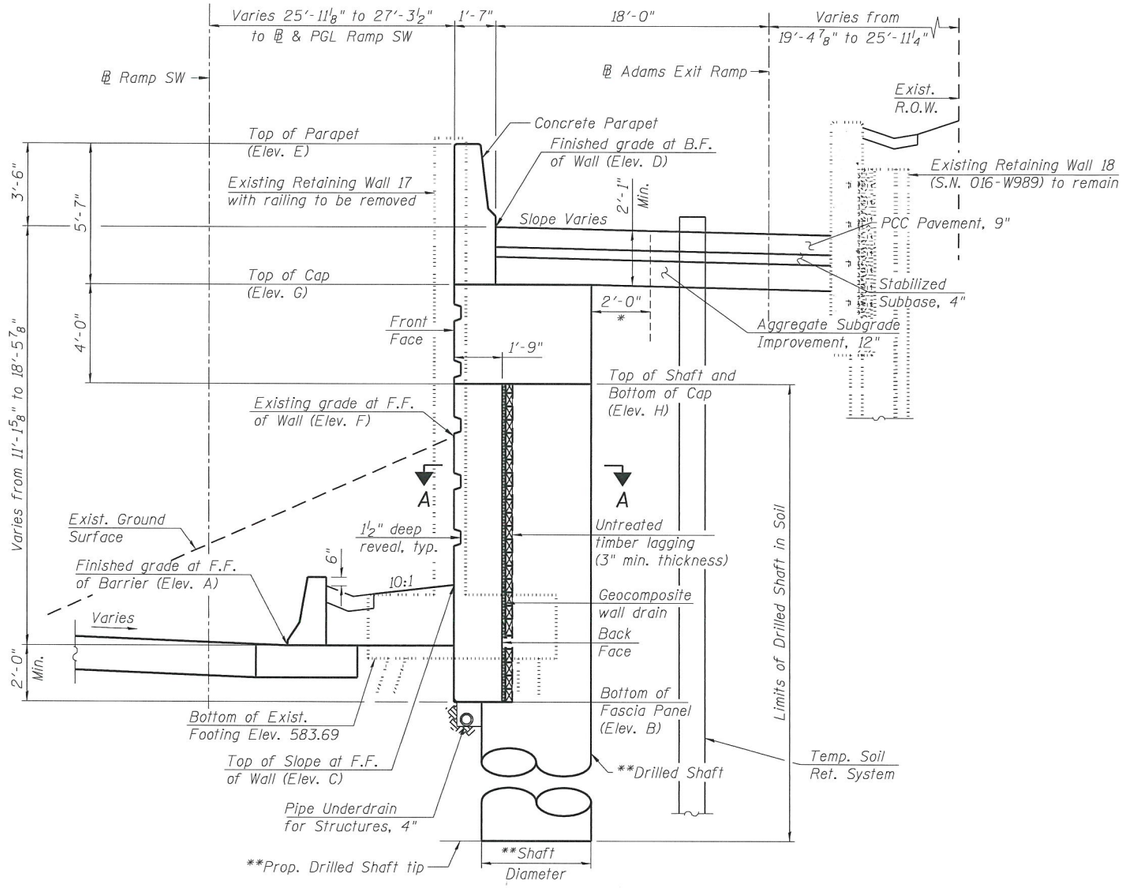

TYPICAL CROSS SECTION - DRILLED SHAFT WALL

(Looking Upstation)
(Sta. 8386+32.39 to Sta. 8387+83.34)

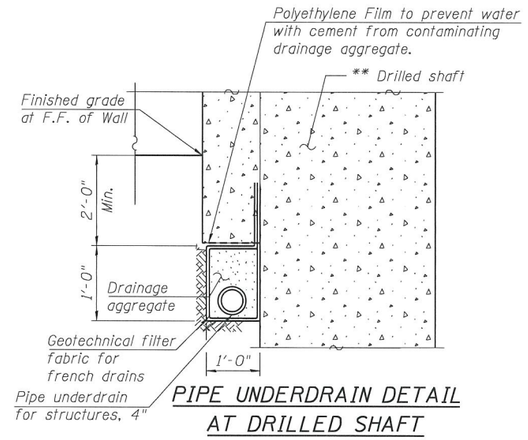

PIPE UNDERDRAIN DETAIL AT DRILLED SHAFT

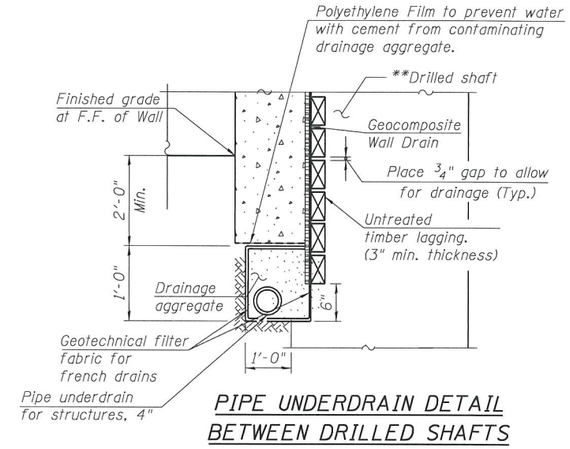

PIPE UNDERDRAIN DETAIL BETWEEN DRILLED SHAFTS

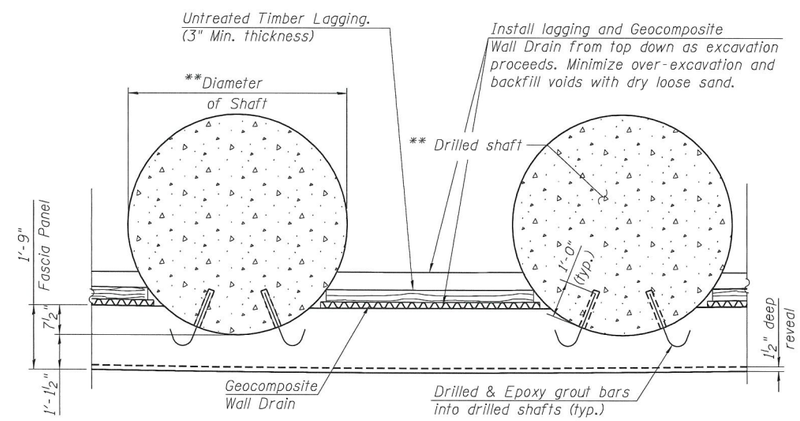

SECTION A-A

(Shaft Reinforcement not shown for clarity)

APPROVED

JUL 24 2019

AS A BASIS FOR PREPARATION OF DETAILED PLANS

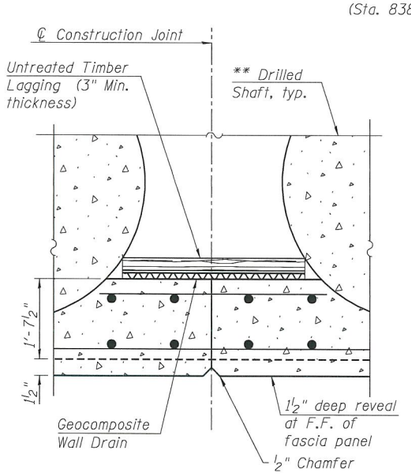

CONSTRUCTION JOINT DETAILS

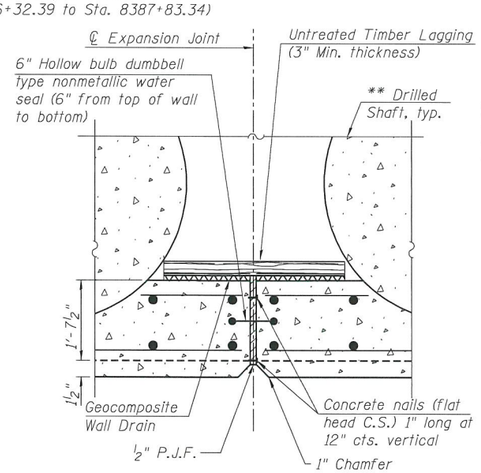

EXPANSION JOINT DETAILS

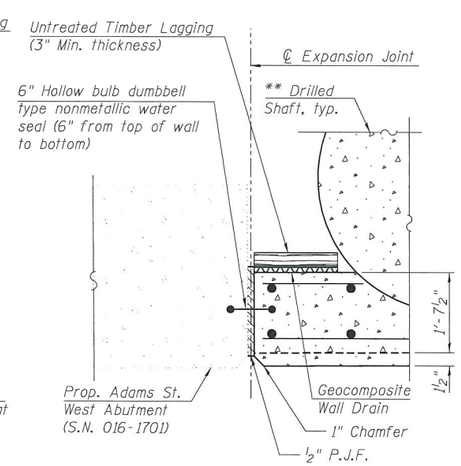

EXPANSION JOINT DETAILS

* Limits of Structure Excavation

** Drilled shaft diameter, spacing and tip elevation to be determined during final design.

LEGEND:

B.F. - denotes Back Face.
E.F. - denotes Each Face.
F.F. - denotes Front Face.

DRILLED SHAFT WALL DETAILS
RETAINING WALL 36 ALONG ADAMS EXIT RAMP
F.A.I. RTE. 90/94 (KENNEDY EXPRESSWAY)
SECTION 2014-015 R&B-R
COOK COUNTY
STATION 8384+81.45 TO STATION 8387+83.34
STRUCTURE NO. 016-1825

TranSystems

USER NAME = wjcolletti	DESIGNED - WJC	REVISED -	
	CHECKED - JM/MDS	REVISED -	
PLOT SCALE = 0.17 ' / in.	DRAWN - WJC	REVISED -	
PLOT DATE = 5/24/2019	CHECKED - JM/MDS	REVISED -	

STATE OF ILLINOIS
DEPARTMENT OF TRANSPORTATION

SHEET NO. 2 OF 3 SHEETS

F.A.I. RTE.	SECTION	COUNTY	TOTAL SHEETS	SHEET NO.
90/94	2014-015 R&B-R	COOK	3	2
		CONTRACT NO. 60X94		
		ILLINOIS FED. AID PROJECT		

3:32:16 PM - pw:\\AECOM-NA-AWS.aecomonline.local:AECOM_DS02_NA\Documents\Di Americas\Transportation\60269938 Circle\Phase_II\000_CAD\008_Structural\Structure_016-1825\TSL\Sheets\016825-60X94-SHT-TSL-002

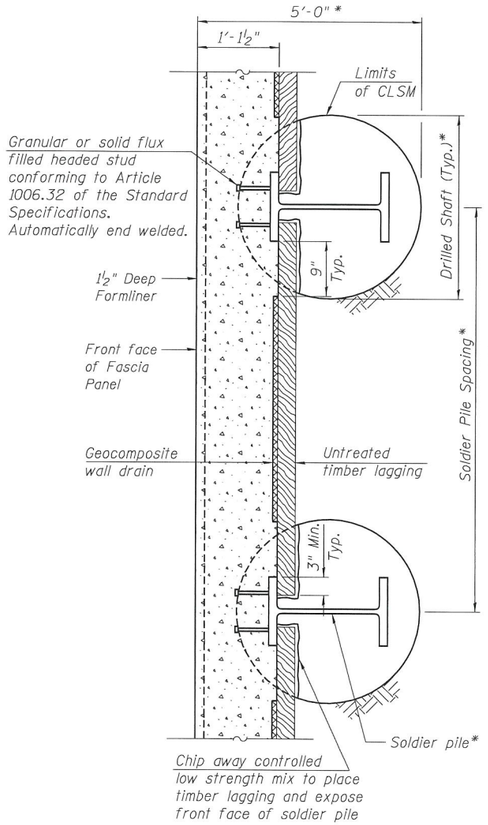

SECTION B-B

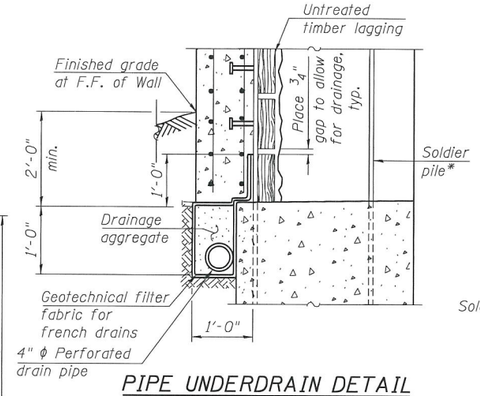

PIPE UNDERDRAIN DETAIL AT SOLDIER PILE

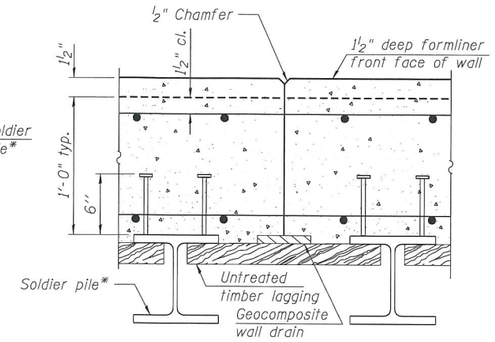

CONSTRUCTION JOINT DETAILS

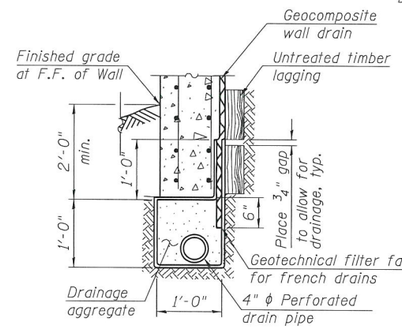

PIPE UNDERDRAIN DETAIL BETWEEN SOLDIER PILES

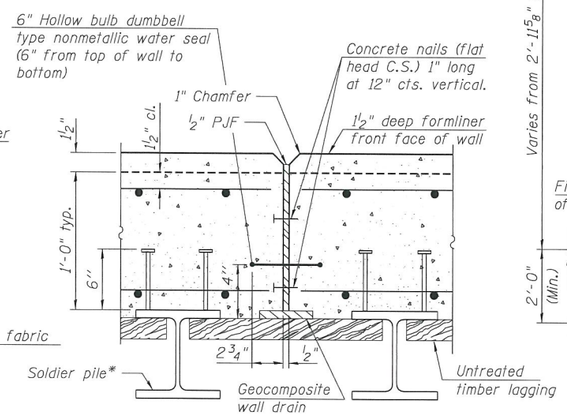

EXPANSION JOINT DETAILS

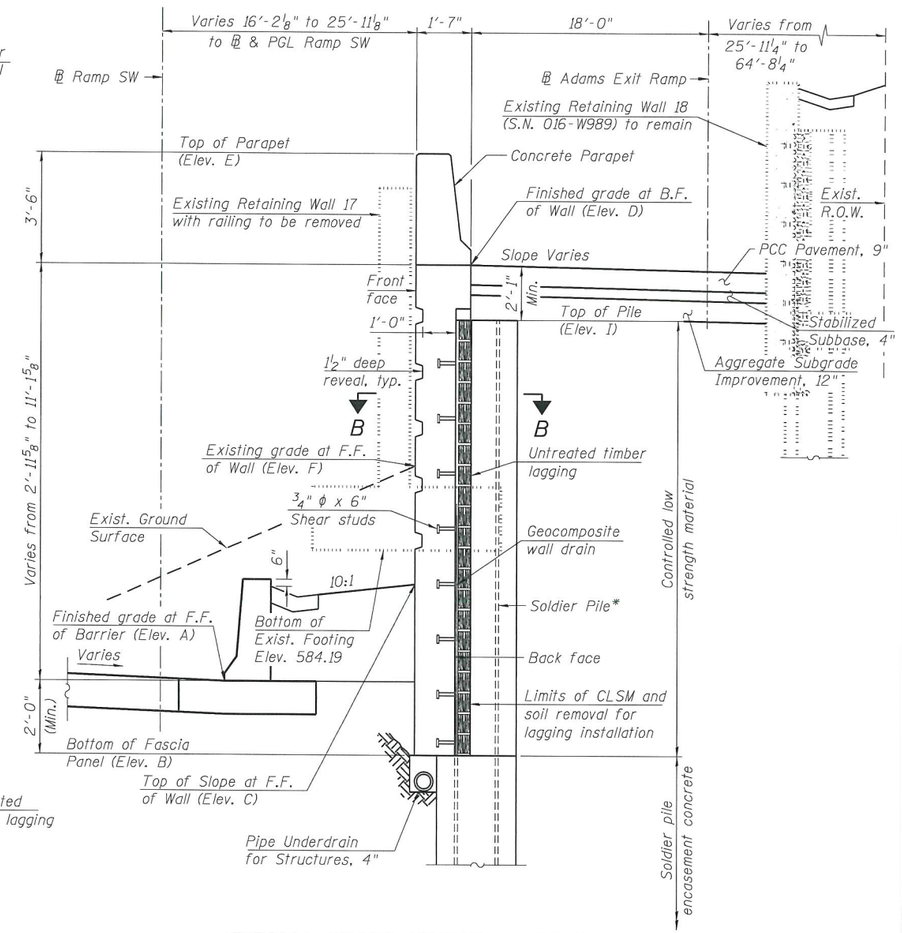

TYPICAL CROSS SECTION - SOLDIER PILE WALL

(Looking upstation)

(Sta. 8384+81.45 to Sta. 8386+32.39

TABLE 1 - WALL ELEVATIONS

	Station	Offset	Elevation A	Elevation B	Elevation C	Elevation D	Elevation E	Elevation F	Elevation G	Elevation H	Elevation I	Wall Type
	8384+81.45	19.58' Lt.	578.63	576.63	582.72	581.60	585.10	580.68	-	-	579.51	Drilled Soldier Pile Wall
	8385+11.64	19.58' Lt.	578.54	576.54	582.91	583.04	586.54	581.67	-	-	580.96	
	8385+41.83	19.58' Lt.	578.39	576.39	583.00	584.48	587.98	581.20	-	-	582.40	
	8385+72.02	19.58' Lt.	578.18	576.18	582.99	585.93	589.43	585.21	-	-	583.85	
	8386+02.20	19.58' Lt.	577.98	575.98	582.93	587.37	590.87	586.81	-	-	585.29	
*	8386+32.39	19.58' Lt.	577.68	575.68	582.48	588.82	592.32	588.41	-	-	586.73	
**	8386+32.39	19.58' Lt.	577.68	575.68	582.48	588.82	592.32	588.41	586.73	582.73	-	Drilled Shafts Wall
	8386+62.58	19.58' Lt.	577.39	575.39	581.99	590.23	593.73	589.96	588.15	584.15	-	
	8386+92.77	19.58' Lt.	577.10	575.10	581.48	591.48	594.98	591.40	589.40	585.40	-	
	8387+22.96	19.58' Lt.	576.80	574.80	580.94	592.55	596.05	592.72	590.46	586.46	-	
	8387+53.15	19.58' Lt.	576.51	574.51	580.37	593.59	597.09	594.55	591.50	587.50	-	
	8387+83.34	19.58' Lt.	576.23	574.23	579.79	594.71	598.21	595.98	592.63	588.63	-	

Elevation A- Finished Grade at Front Face of Barrier
Elevation B- Bottom of Fascia Panel
Elevation C- Top of Slope at Front Face of Wall
Elevation D- Finished Grade at Back Face of Wall
Elevation E- Top of Parapet
Elevation F- Existing Grade at Front Face of Wall
Elevation G- Top of Cap
Elevation H- Top of Shaft / Bottom of Cap
Elevation I- Top of Pile
* Elevations just to the right of joint
** Elevations just to the left of joint

* Soldier Pile section, shaft diameter, spacing, and tip elevation to be determined during final design.

APPROVED

JUL 24 2019

AS A BASIS FOR PREPARATION OF DETAILED PLANS

DRILLED SOLDIER PILE WALL DETAILS
RETAINING WALL 36 ALONG ADAMS EXIT RAMP
F.A.I. RTE. 90/94 (KENNEDY EXPRESSWAY)
SECTION 2014-015 R&B-R
COOK COUNTY
STATION 8384+81.45 TO STATION 8387+83.34
STRUCTURE NO. 016-1825

TranSystems

USER NAME = wjcolletti	DESIGNED - WJC	REVISED -	
	CHECKED - JM/MDS	REVISED -	
PLOT SCALE = 0:2 ':' / in.	DRAWN - WJC	REVISED -	
PLOT DATE = 5/24/2019	CHECKED - JM/MDS	REVISED -	

STATE OF ILLINOIS
DEPARTMENT OF TRANSPORTATION

SHEET NO. 3 OF 3 SHEETS

F.A.I. RTE.	SECTION	COUNTY	TOTAL SHEETS	SHEET NO.
90/94	2014-015 R&B-R	COOK	3	3
		CONTRACT NO. 60X94		
		ILLINOIS FED. AID PROJECT		

2:46:29 PM - pw:\\AECOM-NA-AWS.aecomonline.local:AECOM_DS02_NA\Documents\01 Americas\Transportation\60269938 Circle\Phase_II\000_CAD\008_Structure\Structure_016-1825\TSL\Sheets\061825-60X94-SHT-TSL-003