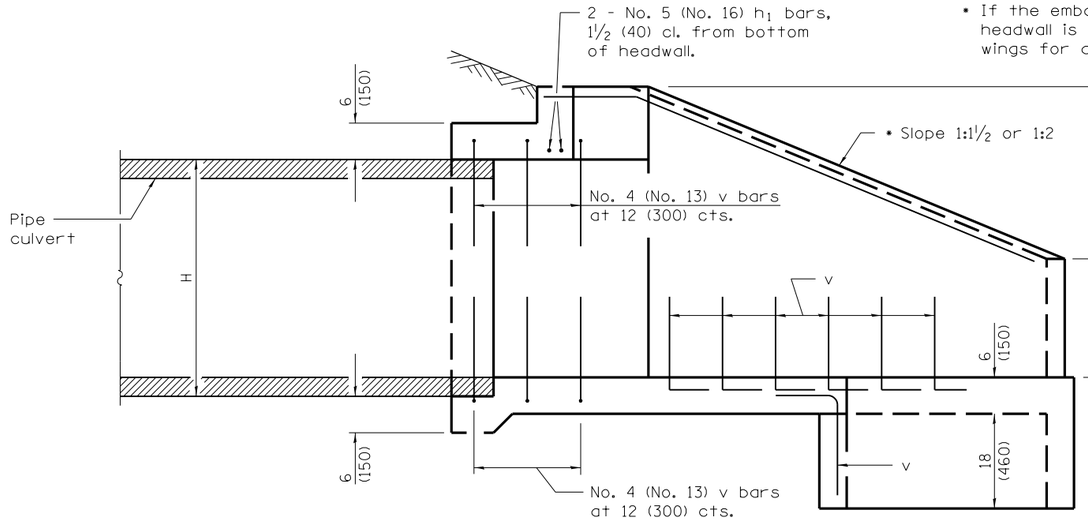

SECTION A–A

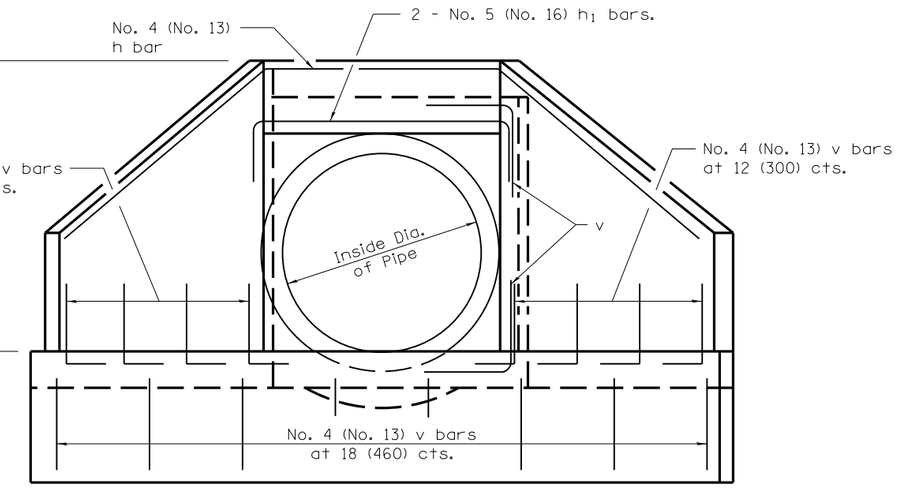

END VIEW

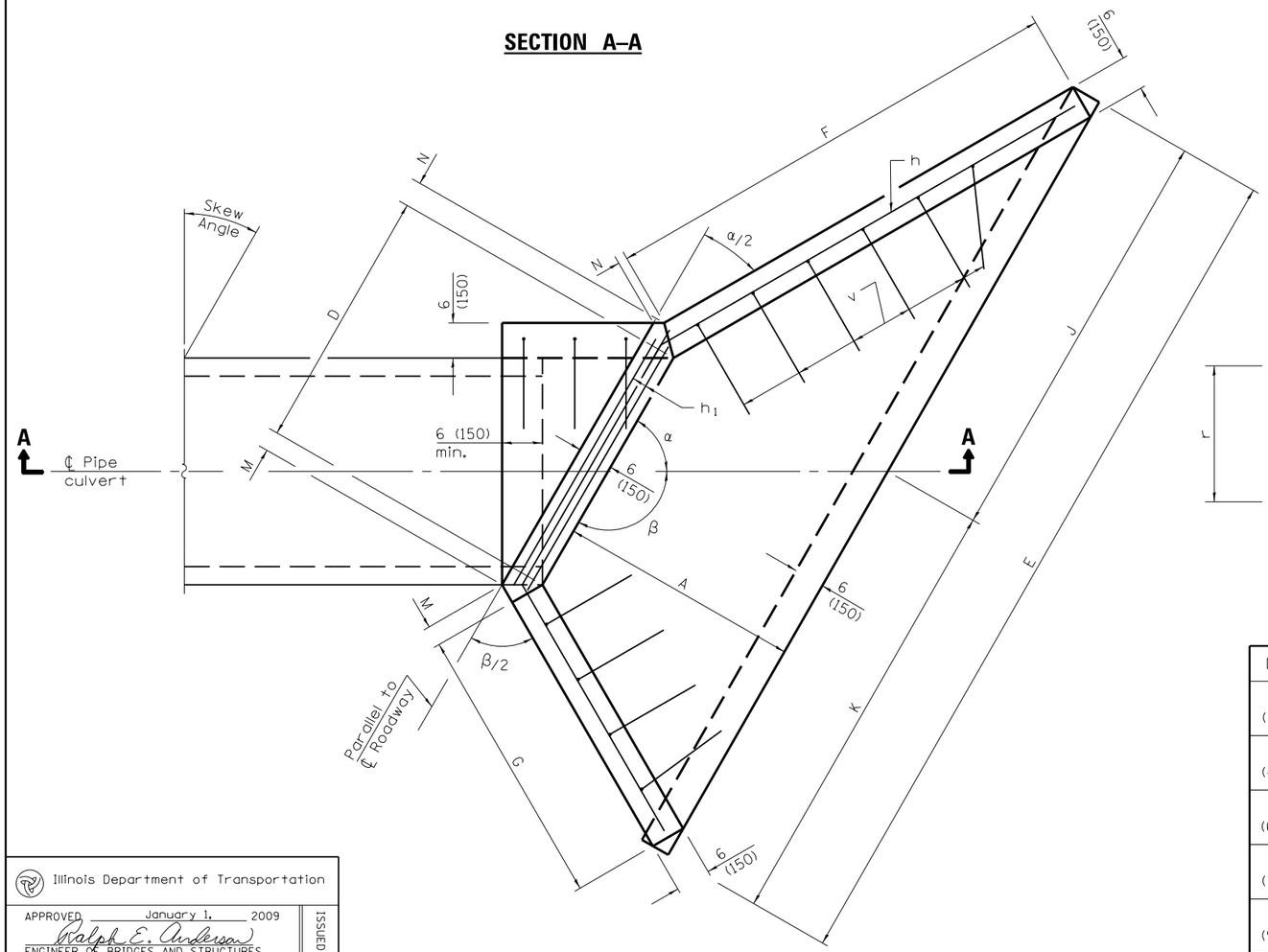

PLAN

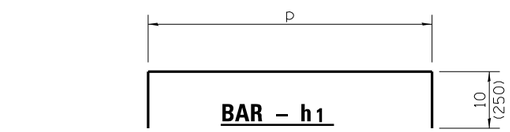

BAR – h_1

Bent in field, two req. for each headwall.

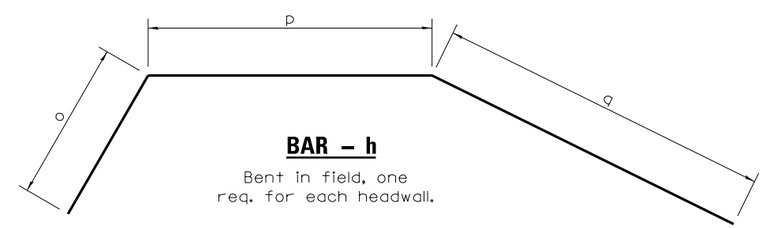

BAR – h

Bent in field, one req. for each headwall.

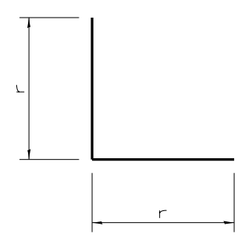

BAR – v

Dia.	r
15 (375)	21 (551)
18 (450)	24 (626)
24 (600)	30 (765)
30 (750)	36 (917)
36 (900)	3′-6″ (1.08 m)

GENERAL NOTES

Build tops of headwalls parallel to grade line.

All slope ratios are expressed as units of vertical displacement to units of horizontal displacement (V:H).

All dimensions are in inches (millimeters) unless otherwise shown.

Illinois Department of Transportation

APPROVED January 1, 2009
Ralph E. Anderson
ENGINEER OF BRIDGES AND STRUCTURES

APPROVED January 1, 2009
ENGINEER OF DESIGN AND ENVIRONMENT

ISSUED 1-1-97

DATE	REVISIONS
1-1-09	Switched units to
	English (metric).
1-1-07	Soft converted metric
	reinforcement bars.
	Added h_1 bars.

REINFORCED CONCRETE END SECTIONS FOR PIPE CULVERTS 15″ (375 mm) THRU 36″ (900 mm) DIA. SKEWED WITH ROADWAY

(Sheet 1 of 5)

STANDARD 542201–02

WINGS FOR 1:1½ SLOPE

Skew Angle	Design No.	Nominal Pipe Dia.	DIMENSIONS FOR CONCRETE													Concrete 2 End Sections yd³ (m³)	Reinf. Bars - 2 End Sections							Bars for 2 End Sections lbs. (kg)
			A	B	C	D	E	F	G	H	J	K	M	N	α		h - bars				h_1 - bars		v-bars No.	
																	o	p	q	Lgth.	p	Lgth.		
5°	DS 15-1½ (DS 375-1½)	15 (375)	28 (720)	10 (260)	29 (740)	19 (485)	6′-11¾″ (2.15 m)	3′-5½″ (1.07 m)	38 (980)	19 (483)	3′-5¾″ (1.07 m)	3′-6″ (1.08 m)	2¾ (70)	2¼ (60)	85°	1.4 (1.1)	3′-6″ (1.01 m)	21 (551)	3′-9″ (1.09 m)	9′-0″ (2.65 m)	21 (551)	3′-5″ (1.04 m)	28	90 (41)
	DS 18-1½ (DS 450-1½)	18 (450)	28 (720)	13 (330)	32 (810)	22 (561)	7′-2¾″ (2.22 m)	3′-5½″ (1.07 m)	38 (980)	22 (559)	3′-7¼″ (1.11 m)	3′-7½″ (1.11 m)	2¾ (70)	2¼ (60)	85°	1.6 (1.2)	3′-6″ (1.03 m)	24 (626)	3′-9″ (1.12 m)	9′-3″ (2.78 m)	24 (626)	3′-8″ (1.12 m)	28	100 (45)
	DS 24-1½ (DS 600-1½)	24 (600)	34 (870)	16 (410)	39 (990)	30 (765)	8′-10¾″ (2.73 m)	4′-2¼″ (1.29 m)	3′-10″ (1.18 m)	30 (762)	4′-5¼″ (1.36 m)	4′-5½″ (1.37 m)	2¾ (70)	2¼ (60)	85°	2.2 (1.7)	4′-3″ (1.23 m)	32 (832)	4′-7″ (1.33 m)	11′-6″ (3.39 m)	32 (832)	4′-4″ (1.32 m)	32	140 (63)
	DS 30-1½ (DS 750-1½)	30 (750)	39 (990)	19 (480)	3′-9″ (1140)	36 (917)	10′-3″ (3.12 m)	4′-9¾″ (1.47 m)	4′-5″ (1.35 m)	36 (914)	5′-1¼″ (1.56 m)	5′-1¾″ (1.56 m)	2¾ (70)	2¼ (60)	85°	2.7 (2.1)	4′-10″ (1.39 m)	39 (983)	5′-2″ (1.51 m)	13′-3″ (3.88 m)	39 (983)	4′-11″ (1.50 m)	36	180 (81)
	DS 36-1½ (DS 900-1½)	36 (900)	3′-9″ (1140)	22 (560)	4′-4″ (1320)	3′-8¼″ (1123)	11′-11″ (3.63 m)	5′-6½″ (1.69 m)	5′-1″ (1.55 m)	3′-8″ (1.119 m)	5′-11¼″ (1.81 m)	5′-11¾″ (1.82 m)	2¾ (70)	2¼ (60)	85°	3.3 (2.5)	5′-7″ (1.6 m)	3′-11″ (1.19 m)	6′-0″ (1.73 m)	15′-6″ (4.52 m)	3′-11″ (1.19 m)	5′-7″ (1.70 m)	42	240 (108)
10°	DS 15-1½ (DS 375-1½)	15 (375)	28 (720)	10 (260)	29 (740)	19¼ (490)	7′-0½″ (2.17 m)	3′-7½″ (1.12 m)	36½ (940)	19 (483)	3′-6″ (1.08 m)	3′-6½″ (1.09 m)	2¾ (70)	2¼ (60)	80°	1.5 (1.2)	3′-4″ (972)	22 (557)	3′-10″ (1.14 m)	9′-0″ (2.67 m)	22 (557)	3′-6″ (1.07 m)	28	90 (41)
	DS 18-1½ (DS 450-1½)	18 (450)	28 (720)	13 (330)	32 (810)	22¼ (568)	7′-3¾″ (2.24 m)	3′-7½″ (1.12 m)	36½ (940)	22 (559)	3′-7½″ (1.11 m)	3′-8¼″ (1.13 m)	2¾ (70)	2¼ (60)	80°	1.6 (1.2)	3′-4″ (990)	25 (633)	3′-10″ (1.17 m)	9′-3″ (2.8 m)	25 (633)	3′-9″ (1.14 m)	28	100 (45)
	DS 24-1½ (DS 600-1½)	24 (600)	34 (870)	16 (410)	39 (990)	30½ (774)	9′-0″ (2.76 m)	4′-5″ (1.36 m)	3′-8½″ (1.14 m)	30 (762)	4′-5¾″ (1.37 m)	4′-6¼″ (1.39 m)	2¾ (70)	2¼ (60)	80°	2.2 (1.7)	4′-1″ (1.18 m)	33 (841)	4′-8″ (1.4 m)	11′-6″ (3.42 m)	33 (841)	4′-5″ (1.35 m)	34	150 (68)
	DS 30-1½ (DS 750-1½)	30 (750)	39 (990)	19 (480)	3′-9″ (1140)	36½ (928)	10′-4½″ (3.15 m)	5′-0¾″ (1.54 m)	4′-3″ (1.3 m)	36 (914)	5′-1¾″ (1.57 m)	5′-2½″ (1.58 m)	2¾ (70)	2¼ (60)	80°	2.8 (2.1)	4′-9″ (1.34 m)	39 (993)	5′-6″ (1.58 m)	13′-6″ (3.92 m)	39 (993)	4′-11″ (1.50 m)	36	180 (81)
	DS 36-1½ (DS 900-1½)	36 (900)	3′-9″ (1140)	22 (560)	4′-4″ (1320)	3′-8¾″ (1136)	12′-0½″ (3.67 m)	5′-10″ (1.78 m)	4′-10¾″ (1.49 m)	3′-8″ (1.119 m)	6′-0″ (1.83 m)	6′-0½″ (1.84 m)	2¾ (70)	2¼ (60)	80°	3.5 (2.7)	5′-6″ (1.54 m)	3′-11″ (1.2 m)	6′-4″ (1.82 m)	15′-9″ (4.56 m)	3′-11″ (1.2 m)	5′-7″ (1.70 m)	42	240 (108)
15°	DS 15-1½ (DS 375-1½)	15 (375)	28 (720)	10 (260)	29 (740)	19¾ (500)	7′-2″ (2.2 m)	3′-10″ (1.19 m)	35¼ (910)	19 (483)	3′-6½″ (1.09 m)	3′-7½″ (1.11 m)	3 (80)	2 (50)	75°	1.5 (1.2)	3′-4″ (942)	22 (567)	4′-1″ (1.2 m)	9′-3″ (2.71 m)	22 (567)	3′-6″ (1.07 m)	28	90 (41)
	DS 18-1½ (DS 450-1½)	18 (450)	28 (720)	13 (330)	32 (810)	22¾ (579)	7′-5¼″ (2.28 m)	3′-10″ (1.19 m)	35¼ (910)	22 (559)	3′-8 ″ (1.13 m)	3′-9¼″ (1.15 m)	3 (80)	2 (50)	75°	1.7 (1.3)	3′-4″ (965)	25 (644)	4′-1″ (1.23 m)	9′-6″ (2.84 m)	25 (644)	3′-9″ (1.14 m)	28	100 (45)
	DS 24-1½ (DS 600-1½)	24 (600)	34 (870)	16 (410)	39 (990)	31 (789)	9′-2″ (2.8 m)	4′-7¾″ (1.43 m)	3′-6¾″ (1.1 m)	30 (762)	4′-6½″ (1.39 m)	4′-7½″ (1.41 m)	3 (80)	2 (50)	75°	2.3 (1.8)	4′-0″ (1.15 m)	34 (857)	4′-11″ (1.47 m)	11′-9″ (3.47 m)	34 (857)	4′-6″ 1.37 m)	34	150 (68)
	DS 30-1½ (DS 750-1½)	30 (750)	39 (990)	19 (480)	3′-9″ (1140)	37¼ (946)	10′-6½″ (3.21 m)	5′-4″ (1.63 m)	4′-1¼″ (1.25 m)	36 (914)	5′-2¾″ (1.59 m)	5′-3¾″ (1.62 m)	3 (80)	2 (50)	75°	2.9 (2.2)	4′-8″ (1.3 m)	3′-4″ (1.01 m)	5′-9″ (1.67 m)	13′-9″ (3.98 m)	3′-4″ (1.01 m)	5′-0″ (1.52 m)	40	200 (90)
	DS 36-1½ (DS 900-1½)	36 (900)	3′-9″ (1140)	22 (560)	4′-4″ (1320)	3′-9½″ (1158)	12′-3¼″ (3.73 m)	6′-2″ (1.87 m)	4′-8¾″ (1.44 m)	3′-8″ (1.119 m)	6′-1″ (1.85 m)	6′-2¼″ (1.88 m)	3 (80)	2 (50)	75°	3.8 (2.9)	5′-3″ (1.49 m)	4′-0″ (1.22 m)	6′-6″ (1.92 m)	15′-9″ (4.63 m)	4′-0″ (1.22 m)	5′-8″ (1.73 m)	46	260 (117)
20°	DS 15-1½ (DS 375-1½)	15 (375)	28 (720)	10 (260)	29 (740)	20¼ (514)	7′-4″ (2.26 m)	4′-0¾″ (1.26 m)	34¼ (880)	19 (483)	3′-7¼″ (1.11 m)	3′-8¾″ (1.15 m)	3 (80)	2 (50)	70°	1.6 (1.2)	39 (916)	23 (581)	4′-4″ (1.27 m)	9′-6″ (2.77 m)	23 (581)	3′-7″ (1.09 m)	28	90 (41)
	DS 18-1½ (DS 450-1½)	18 (450)	28 (720)	13 (330)	32 (810)	23½ (595)	7′-7½″ (2.34 m)	4′-0¾″ (1.26 m)	34¼ (880)	22 (559)	3′-9″ (1.15 m)	3′-10½″ (1.19 m)	3 (80)	2 (50)	70°	1.7 (1.3)	39 (938)	26 (661)	4′-4″ (1.31 m)	9′-9″ (2.9 m)	26 (661)	3′-10″ (1.17 m)	28	100 (45)
	DS 24-1½ (DS 600-1½)	24 (600)	34 (870)	16 (410)	39 (990)	32 (811)	9′-4½″ (2.87 m)	4′-11¼″ (1.52 m)	3′-5½″ (1.07 m)	30 (762)	4′-7½″ (1.42 m)	4′-9″ (1.45 m)	3 (80)	2 (50)	70°	2.4 (1.8)	3′-11″ (1.11 m)	35 (879)	5′-2″ (1.56 m)	12′-0″ (3.55 m)	35 (879)	4′-7″ (1.40 m)	38	160 (72)
	DS 30-1½ (DS 750-1½)	30 (750)	39 (990)	19 (480)	3′-9″ (1140)	28¼ (973)	10′-9¾″ (3.29 m)	5′-8″ (1.73 m)	3′-11½″ (1.21 m)	36 (914)	5′-4¼″ (1.63 m)	5′-5½″ (1.66 m)	3 (80)	2 (50)	70°	3.1 (2.4)	4′-5″ (1.26 m)	3′-5″ (1.04 m)	5′-11″ (1.77 m)	13′-9″ (4.07 m)	3′-5″ (1.04 m)	5′-1″ (1.55 m)	42	210 (95)
	DS 36-1½ (DS 900-1½)	36 (900)	3′-9″ (1140)	22 (560)	4′-4″ (1320)	3′-10¾″ (1191)	12′-7″ (3.86 m)	6′-6½″ (1.99 m)	4′-7″ (1.41 m)	3′-8″ (1.119 m)	6′-2¾″ (1.9 m)	6′-4¼″ (1.93 m)	3 (80)	2 (50)	70°	4.0 (3.1)	5′-3″ (1.45 m)	4′-1″ (1.26 m)	6′-11″ (2.03 m)	16′-3″ (4.73 m)	4′-1″ (1.26 m)	5′-9″ (1.75 m)	50	280 (126)
25°	DS 15-1½ (DS 375-1½)	15 (375)	28 (720)	10 (260)	29 (740)	21 (533)	7′-7″ (2.33 m)	4′-4″ (1.34 m)	33¼ (860)	19 (483)	3′-8½″ (1.14 m)	3′-10½″ (1.19 m)	3¼ (90)	1¾ (50)	65°	1.6 (1.2)	39 (893)	23 (600)	4′-7″ (1.36 m)	9′-9″ (2.85 m)	23 (600)	3′-7″ (1.09 m)	28	90 (41)
	DS 18-1½ (DS 450-1½)	18 (450)	28 (720)	13 (330)	32 (810)	24¼ (617)	7′-10¼″ (2.42 m)	4′-4″ (1.34 m)	33¼ (860)	22 (559)	3′-10¼″ (1.19 m)	4′-0″ (1.23 m)	3¼ (90)	1¾ (50)	65°	1.8 (1.4)	38 (914)	27 (683)	4′-7″ (1.39 m)	10′-0″ (2.99 m)	27 (683)	3′-11″ (1.19 m)	32	120 (54)
	DS 24-1½ (DS 600-1½)	24 (600)	34 (870)	16 (410)	39 (990)	33 (841)	9′-8½″ (2.97 m)	5′-3¼″ (1.62 m)	3′-4¼″ (1.04 m)	30 (762)	4′-9¼″ (1.46 m)	4′-11¼″ (1.51 m)	3¼ (90)	1¾ (50)	65°	2.5 (1.9)	3′-10″ (1.09 m)	35 (909)	5′-6″ (1.66 m)	12′-3″ (3.65 m)	35 (909)	4′-7″ (1.40 m)	38	160 (72)
	DS 30-1½ (DS 750-1½)	30 (750)	39 (990)	19 (480)	3′-9″ (1140)	3′-3¾″ (1008)	11′-2″ (3.4 m)	6′-0½″ (1.83 m)	3′-10¼″ (1.18 m)	36 (914)	5′-6″ (1.68 m)	5′-8″ (1.72 m)	3¼ (90)	1¾ (50)	65°	3.3 (2.5)	4′-5″ (1.23 m)	3′-6″ (1.08 m)	6′-4″ (1.88 m)	14′-3″ (4.18 m)	3′-6″ (1.08 m)	5′-2″ (1.58 m)	44	220 (99)
	DS 36-1½ (DS 900-1½)	36 (900)	3′-9″ (1140)	22 (560)	4′-4″ (1320)	4′-0½″ (1235)	13′-0¼″ (3.96 m)	6′-11¾″ (2.12 m)	4′-5¼″ (1.36 m)	3′-8″ (1.119 m)	6′-5¼″ (1.96 m)	6′-7″ (2 m)	3¼ (90)	1¾ (50)	65°	4.3 (3.3)	5′-0″ (1.41 m)	4′-3″ (1.3 m)	7′-3″ (2.16 m)	16′-6″ (4.87 m)	4′-3″ (1.3 m)	5′-11″ (1.80 m)	50	280 (126)
30°	DS 15-1½ (DS 375-1½)	15 (375)	28 (720)	10 (260)	29 (740)	22 (558)	7′-10¾″ (2.43 m)	4′-8″ (1.44 m)	32¼ (830)	19 (483)	3′-10¼″ (1.19 m)	4′-0½″ (1.24 m)	3¼ (90)	1½ (40)	60°	1.7 (1.3)	37 (873)	24 (626)	4′-11″ (1.46 m)	10′-0″ (2.95 m)	24 (626)	3′-8″ (1.12 m)	36	110 (50)
	DS 18-1½ (DS 450-1½)	18 (450)	28 (720)	13 (330)	32 (810)	25½ (645)	8′-2¼″ (2.52 m)	4′-8″ (1.44 m)	32¼ (830)	22 (559)	4′-0″ (1.23 m)	4′-2¼″ (1.29 m)	3¼ (90)	1½ (40)	60°	1.9 (1.5)	38 (893)	28 (712)	5′-0″ (1.49 m)	10′-6″ (3.1 m)	28 (712)	4′-0″ (1.22 m)	36	130 (59)
	DS 24-1½ (DS 600-1½)	24 (600)	34 (870)	16 (410)	39 (990)	34¾ (880)	10′-1¼″ (3.1 m)	5′-8″ (1.74 m)	3′-3¼″ (1.01 m)	30 (762)	4′-11½″ (1.52 m)	5′-1¾″ (1.58 m)	3¼ (90)	1½ (40)	60°	2.7 (2.1)	3′-9″ (1.06 m)	37 (949)	5′-11″ (1.78 m)	12′-9″ (3.79 m)	37 (949)	4′-9″ (1.45 m)	40	170 (77)
	DS 30-1½ (DS 750-1½)	30 (750)	39 (990)	19 (480)	3′-9″ (1140)	3′-5½″ (1055)	11′-7¾″ (3.55 m)	6′-6″ (1.98 m)	3′-9″ (1.15 m)	36 (914)	5′-8¾″ (1.75 m)	5′-11″ (1.8 m)	3¼ (90)	1½ (40)	60°	3.5 (2.7)	4′-4″ (1.2 m)	3′-8″ (1.12 m)	6′-9″ (2.02 m)	14′-9″ (4.34 m)	3′-8″ (1.12 m)	5′-4″ (1.63 m)	46	230 (104)
	DS 36-1½ (DS 900-1½)	36 (900)	3′-9″ (1140)	22 (560)	4′-4″ (1320)	4′-2¾″ (1292)	13′-7″ (4.13 m)	7′-6″ (2.28 m)	4′-4″ (1.32 m)	3′-8″ (1.119 m)	6′-8½″ (2.04 m)	6′-10½″ (2.09 m)	3¼ (90)	1½ (40)	60°	4.6 (3.5)	5′-0″ (1.37 m)	4′-5″ (1.36 m)	7′-10″ (2.32 m)	17′-3″ (5.05 m)	4′-5″ (1.36 m)	6′-1″ (1.86 m)	54	300 (135)

Illinois Department of Transportation

APPROVED January 1, 2009
Ralph E. Anderson
ENGINEER OF BRIDGES AND STRUCTURES

APPROVED January 1, 2009
Eric E. Harm
ENGINEER OF DESIGN AND ENVIRONMENT

ISSUED 1-1-97

REINFORCED CONCRETE END SECTIONS FOR PIPE CULVERTS
15″ (375 mm) THRU 36″ (900 mm) DIA.
SKEWED WITH ROADWAY

(Sheet 2 of 5)

STANDARD 542201–02

WINGS FOR 1:1½ SLOPE

Skew Angle	Design No.	Nominal Pipe Dia.	DIMENSIONS FOR CONCRETE													Concrete 2 End Sections yd³ (m³)	Reinf. Bars - 2 End Sections							Bars for 2 End Sections lbs. (kg)
			A	B	C	D	E	F	G	H	J	K	M	N	α		h - bars				h_1 - bars		v-bars No.	
																	o	p	q	Lgth.	p	Lgth.		
35°	DS 15-1½ (DS 375-1½)	15 (375)	28 (720)	10 (260)	29 (740)	23¼ (590)	8′-3¾″ (2.55 m)	5′-0¾″ (1.56 m)	31½ (820)	19 (483)	4′-0½″ (1.24 m)	4′-3″ (1.31 m)	3¾ (90)	1½ (40)	55°	1.8 (1.4)	37 (855)	26 (658)	5′-3″ (1.57 m)	10′-6″ (3.09 m)	26 (658)	3′-10″ (1.17 m)	36	110 (50)
	DS 18-1½ (DS 450-1½)	18 (450)	28 (720)	13 (330)	32 (810)	27 (682)	8′-7¼″ (2.65 m)	5′-0¾″ (1.56 m)	31½ (820)	22 (559)	4′-2¼″ (1.29 m)	4′-5″ (1.36 m)	3¾ (90)	1½ (40)	55°	2.0 (1.5)	37 (876)	29 (750)	5′-3″ (1.61 m)	10′-9″ (3.24 m)	29 (750)	4′-1″ (1.25 m)	36	130 (59)
	DS 24-1½ (DS 600-1½)	24 (600)	34 (870)	16 (410)	39 (990)	36½ (930)	10′-7¾″ (3.26 m)	6′-1¾″ (1.88 m)	38¼ (980)	30 (762)	5′-2½″ (1.6 m)	5′-5¼″ (1.66 m)	3¾ (90)	1½ (40)	55°	2.9 (2.2)	3′-8″ (1.04 m)	39 (1.0 m)	6′-4″ (1.92 m)	13′-3″ (3.96 m)	39 (1.0 m)	4′-11″ (1.50 m)	40	170 (77)
	DS 30-1½ (DS 750-1½)	30 (750)	39 (990)	19 (480)	3′-9″ (1140)	3′-8″ (1.116 m)	12′-3¼″ (3.74 m)	7′-0½″ (2.15 m)	3′-8″ (1.12 m)	36 (914)	6′-0¼″ (1.84 m)	6′-3″ (1.9 m)	3¾ (90)	1½ (40)	55°	3.7 (2.8)	4′-2″ (1.17 m)	3′-11″ (1.18 m)	7′-2″ (2.18 m)	15′-3″ (4.54 m)	3′-11″ (1.18 m)	5′-7″ (1.70 m)	50	240 (108)
	DS 36-1½ (DS 900-1½)	36 (900)	3′-9″ (1140)	22 (560)	4′-4″ (1320)	4′-5¾″ (1.366 m)	14′-3¾″ (4.35 m)	8′-1½″ (2.47 m)	4′-2¾″ (1.3 m)	3′-8″ (1.119 m)	7′-0½″ (2.14 m)	7′-3¼″ (2.21 m)	3¾ (90)	1½ (40)	55°	4.9 (3.8)	4′-11″ (1.34 m)	4′-8″ (1.43 m)	8′-5″ (2.51 m)	18′-0″ (5.29 m)	4′-8″ (1.43 m)	6′-4″ (1.93 m)	56	310 (140)
40°	DS 15-1½ (DS 375-1½)	15 (375)	28 (720)	10 (260)	29 (740)	24¾ (631)	8′-10″ (2.71 m)	5′-6¼″ (1.71 m)	31 (780)	19 (483)	4′-3½″ (1.32 m)	4′-6½″ (1.39 m)	3¾ (100)	1¼ (40)	50°	1.9 (1.5)	37 (840)	27 (700)	5′-8″ (1.71 m)	11′-0″ (3.25 m)	27 (700)	3′-11″ (1.19 m)	38	120 (54)
	DS 18-1½ (DS 450-1½)	18 (450)	28 (720)	13 (330)	32 (810)	28¾ (730)	9′-1¾″ (2.81 m)	5′-6¼″ (1.71 m)	31 (780)	22 (559)	4′-5½″ (1.37 m)	4′-8¼″ (1.44 m)	3¾ (100)	1¼ (40)	50°	2.2 (1.7)	36 (860)	31 (798)	5′-8″ (1.76 m)	11′-3″ (3.41 m)	31 (798)	4′-3″ (1.30 m)	38	130 (59)
	DS 24-1½ (DS 600-1½)	24 (600)	34 (870)	16 (410)	39 (990)	3′-3¼″ (995)	11′-4″ (3.47 m)	6′-8½″ (2.08 m)	37½ (960)	30 (762)	5′-6½″ (1.7 m)	5′-9½″ (1.77 m)	3¾ (100)	1¼ (40)	50°	3.1 (2.4)	3′-8″ (1.02 m)	3′-6″ (1.07 m)	6′-10″ (2.1 m)	14′-0″ (4.18 m)	3′-6″ (1.07 m)	5′-2″ (1.58 m)	48	200 (90)
	DS 30-1½ (DS 750-1½)	30 (750)	39 (990)	19 (480)	3′-9″ (1140)	3′-11″ (1.193 m)	13′-0¾″ (3.98 m)	7′-8¼″ (2.35 m)	3′-7″ (1.1 m)	36 (914)	6′-5″ (1.95 m)	6′-7¾″ (2.03 m)	3¾ (100)	1¼ (40)	50°	4.0 (3.1)	4′-2″ (1.15 m)	4′-2″ (1.26 m)	7′-11″ (2.38 m)	16′-3″ (4.79 m)	4′-2″ (1.26 m)	5′-10″ (1.78 m)	54	260 (117)
	DS 36-1½ (DS 900-1½)	36 (900)	3′-9″ (1140)	22 (560)	4′-4″ (1320)	4′-9½″ (1.461 m)	15′-3″ (4.64 m)	8′-10½″ (2.7 m)	4′-1¾″ (1.26 m)	3′-8″ (1.119 m)	7′-6″ (2.28 m)	7′-9″ (2.35 m)	3¾ (100)	1¼ (40)	50°	5.3 (4.1)	4′-10″ (1.32 m)	5′-0″ (1.53 m)	9′-2″ (2.74 m)	19′-0″ (5.59 m)	5′-0″ (1.53 m)	6′-8″ (2.03 m)	62	340 (153)
45°	DS 15-1½ (DS 375-1½)	15 (375)	28 (720)	10 (260)	29 (740)	27 (683)	9′-6″ (2.92 m)	6′-1¼″ (1.88 m)	30¼ (780)	19 (483)	4′-7½″ (1.42 m)	4′-10½″ (1.5 m)	4 (100)	1¼ (30)	45°	2.1 (1.6)	36 (829)	29 (753)	6′-1″ (1.89 m)	11′-6″ (3.47 m)	29 (753)	4′-1″ (1.25 m)	40	130 (59)
	DS 18-1½ (DS 450-1½)	18 (450)	28 (720)	13 (330)	32 (810)	31 (791)	9′-10¼″ (3.03 m)	6′-1¼″ (1.88 m)	30¼ (780)	22 (559)	4′-9½″ (1.47 m)	5′-0¾″ (1.56 m)	4 (100)	1¼ (30)	45°	2.4 (1.8)	36 (847)	34 (859)	6′-2″ (1.94 m)	12′-0″ (3.64 m)	34 (859)	4′-6″ (1.37 m)	44	150 (68)
	DS 24-1½ (DS 600-1½)	24 (600)	34 (870)	16 (410)	39 (990)	3′-6½″ (1.078 m)	12′-3½″ (3.74 m)	7′-4¾″ (2.28 m)	36¾ (950)	30 (762)	5′-11½″ (1.83 m)	6′-3″ (1.91 m)	4 (100)	1¼ (30)	45°	3.4 (2.6)	3′-8″ (1.0 m)	3′-9″ (1.15 m)	7′-7″ (2.31 m)	15′-0″ (4.47 m)	3′-9″ (1.15 m)	5′-5″ (1.65 m)	50	210 (95)
	DS 30-1½ (DS 750-1½)	30 (750)	39 (990)	19 (480)	3′-9″ (1140)	4′-3″ (1.293 m)	14′-1″ (4.29 m)	8′-6″ (2.59 m)	3′-6¼″ (1.08 m)	36 (914)	6′-11″ (2.1 m)	7′-2″ (2.19 m)	4 (100)	1¼ (30)	45°	4.4 (3.4)	4′-2″ (1.13 m)	4′-5″ (1.36 m)	8′-8″ (2.63 m)	17′-3″ (5.12 m)	4′-5″ (1.36 m)	6′-1″ (1.86 m)	62	300 (135)
	DS 36-1½ (DS 900-1½)	36 (900)	3′-9″ (1140)	22 (560)	4′-4″ (1320)	5′-2¼″ (1.583 m)	16′-5¼″ (5.01 m)	9′-9½″ (2.98 m)	4′-0¾″ (1.24 m)	3′-8″ (1.119 m)	8′-1″ (2.46 m)	8′-4¼″ (2.55 m)	4 (100)	1¼ (30)	45°	5.7 (4.4)	4′-10″ (1.3 m)	5′-5″ (1.65 m)	10′-0″ (3.02 m)	20′-3″ (5.97 m)	5′-5″ (1.65 m)	7′-1″ (2.16 m)	66	370 (167)
50°	DS 15-1½ (DS 375-1½)	15 (375)	28 (720)	10 (260)	29 (740)	29½ (751)	10′-4½″ (3.18 m)	6′-10″ (2.11 m)	29¾ (770)	19 (483)	5′-0½″ (1.55 m)	5′-4″ (1.64 m)	4¼ (110)	1 (30)	40°	2.3 (1.8)	35 (817)	32 (822)	6′-11″ (2.11 m)	12′-6″ (3.75 m)	32 (822)	4′-4″ (1.32 m)	46	140 (63)
	DS 18-1½ (DS 450-1½)	18 (450)	28 (720)	13 (330)	32 (810)	24¼ (870)	10′-9″ (3.31 m)	6′-10″ (2.11 m)	29¾ (770)	22 (559)	5′-2¾″ (1.61 m)	5′-6¼″ (1.7 m)	4¼ (110)	1 (30)	40°	2.6 (2.0)	36 (836)	37 (939)	6′-11″ (2.16 m)	13′-0″ (3.94 m)	37 (939)	4′-9″ (1.45 m)	46	160 (72)
	DS 24-1½ (DS 600-1½)	24 (600)	34 (870)	16 (410)	39 (990)	3′-10¾″ (1.185 m)	13′-4¼″ (4.08 m)	8′-3½″ (2.55 m)	36¼ (930)	30 (762)	6′-6¼″ (2 m)	6′-10″ (2.09 m)	4¼ (110)	1 (30)	40°	3.7 (2.8)	3′-7″ (990)	4′-1″ (1.26 m)	8′-4″ (2.58 m)	16′-0″ (4.83 m)	4′-1″ (1.26 m)	5′-9″ (1.75 m)	56	230 (104)
	DS 30-1½ (DS 750-1½)	30 (750)	39 (990)	19 (480)	3′-9″ (1140)	4′-8″ (1.422 m)	15′-5″ (4.7 m)	9′-6″ (2.9 m)	3′-5½″ (1.06 m)	36 (914)	7′-6¾″ (2.3 m)	7′-10¼″ (2.39 m)	4¼ (110)	1 (30)	40°	4.8 (3.7)	4′-1″ (1.12 m)	4′-10″ (1.49 m)	9′-7″ (2.94 m)	18′-6″ (5.54 m)	4′-10″ (1.49 m)	6′-6″ (1.98 m)	66	320 (144)
	DS 36-1½ (DS 900-1½)	36 (900)	3′-9″ (1140)	22 (560)	4′-4″ (1320)	5′-8½″ (1.741 m)	18′-0¼″ (5.48 m)	10′-11½″ (3.34 m)	4′-0″ (1.22 m)	3′-8″ (1.119 m)	8′-10¼″ (2.7 m)	9′-2″ (2.78 m)	4¼ (110)	1 (30)	40°	6.3 (4.8)	4′-9″ (1.28 m)	5′-11″ (1.81 m)	11′-1″ (3.38 m)	21′-9″ (6.47 m)	5′-11″ (1.81 m)	7′-7″ (2.31 m)	74	410 (185)
55°	DS 15-1½ (DS 375-1½)	15 (375)	28 (720)	10 (260)	29 (740)	33 (842)	11′-6¼″ (3.54 m)	7′-9″ (2.4 m)	29¼ (760)	19 (483)	5′-7¼″ (1.72 m)	5′-11″ (1.82 m)	4½ (110)	1 (30)	35°	2.6 (2.0)	35 (809)	36 (914)	7′-10″ (2.4 m)	13′-9″ (4.12 m)	36 (914)	4′-8″ (1.42 m)	50	150 (68)
	DS 18-1½ (DS 450-1½)	18 (450)	28 (720)	13 (330)	32 (810)	38¼ (975)	11′-11½″ (3.68 m)	7′-9″ (2.4 m)	29¼ (760)	22 (559)	5′-9¾″ (1.79 m)	6′-1¾″ (1,89 m)	4½ (110)	1 (30)	35°	2.9 (2.2)	36 (827)	3′-5″ (1.05 m)	7′-10″ (2.46 m)	14′-3″ (4.33 m)	3′-5″ (1.05 m)	5′-1″ (1.55 m)	50	170 (77)
	DS 24-1½ (DS 600-1½)	24 (600)	34 (870)	16 (410)	39 (990)	4′-4¼″ (1.329 m)	14′-10½″ (4.55 m)	9′-5″ (2.9 m)	35¾ (910)	30 (762)	7′-3¼″ (2.23 m)	7′-7¼″ (2.32 m)	4½ (110)	1 (30)	35°	4.2 (3.2)	3′-6″ (978)	4′-7″ (1.4 m)	9′-5″ (2.94 m)	17′-6″ (5.32 m)	4′-7″ (1.4 m)	6′-3″ (1.91 m)	62	260 (117)
	DS 30-1½ (DS 750-1½)	30 (750)	39 (990)	19 (480)	3′-9″ (1140)	5′-2¾″ (1.594 m)	17′-2¼″ (5.24 m)	10′-9¾″ (3.3 m)	3′-5″ (1.04 m)	36 (914)	8′-5¼″ (2.57 m)	8′-9″ (2.67 m)	4½ (110)	1 (30)	35°	5.4 (4.1)	4′-1″ (1.1 m)	5′-6″ (1.66 m)	10′-11″ (3.33 m)	20′-6″ (6.1 m)	5′-6″ (1.66 m)	7′-2″ (2.19 m)	74	350 (158)
	DS 36-1½ (DS 900-1½)	36 (900)	3′-9″ (1140)	22 (560)	4′-4″ (1320)	6′-4¾″ (1.951 m)	20′-1¼″ (6.12 m)	12′-5¾″ (3.79 m)	3′-11¼″ (1.2 m)	3′-8″ (1.119 m)	9′-10¾″ (3.01 m)	10′-2½″ (3.11 m)	4½ (110)	1 (30)	35°	7.1 (5.4)	4′-9″ (1.26 m)	6′-7″ (2.02 m)	12′-8″ (3.84 m)	24′-0″ (7.12 m)	6′-7″ (2.02 m)	8′-3″ (2.52 m)	86	212 (470)
60°	DS 15-1½ (DS 375-1½)	15 (375)	28 (720)	10 (260)	29 (740)	38 (966)	13′-1¼″ (4.03 m)	9′-0¼″ (2.78 m)	29 (750)	19 (483)	6′-4½″ (1.96 m)	6′-8¾″ (2.07 m)	4½ (120)	0¾ (20)	30°	2.9 (2.2)	34 (802)	3′-5″ (1.04 m)	9′-0″ (2.78 m)	15′-3″ (4.62 m)	3′-5″ (1.04 m)	5′-1″ (1.55 m)	54	170 (77)
	DS 18-1½ (DS 450-1½)	18 (450)	28 (720)	13 (330)	32 (810)	3′-8″ (1.118 m)	13′-7¼″ (4.18 m)	9′-0¼″ (2.78 m)	29 (750)	22 (559)	6′-7½″ (2.04 m)	6′-11¾″ (2.14 m)	4½ (120)	0¾ (20)	30°	3.2 (2.5)	34 (820)	3′-11″ (1.19 m)	9′-0″ (2.85 m)	15′-0″ (4.86 m)	3′-11″ (1.19 m)	5′-7″ (1.70 m)	58	200 (90)
	DS 24-1½ (DS 600-1½)	24 (600)	34 (870)	16 (410)	39 (990)	5′-0″ (1.524 m)	16′-11¼″ (5.19 m)	10′-11¼″ (3.36 m)	35¼ (900)	30 (762)	8′-3½″ (2.04 m)	8′-7¾″ (2.65 m)	4½ (120)	0¾ (20)	30°	4.7 (3.6)	3′-6″ (969)	5′-3″ (1.6 m)	11′-0″ (3.41 m)	19′-9″ (5.98 m)	5′-3″ (1.6 m)	6′-11″ (2.11 m)	72	300 (135)
	DS 30-1½ (DS 750-1½)	30 (750)	39 (990)	19 (480)	3′-9″ (1140)	6′-0″ (1.828 m)	19′-7¼″ (5.97 m)	12′-6¾″ (3.83 m)	3′-4½″ (1.03 m)	36 (914)	9′-7½″ (2.93 m)	9′-11¾″ (3.04 m)	4½ (120)	0¾ (20)	30°	6.1 (4.7)	4′-1″ (1.09 m)	6′-3″ (1.9 m)	12′-8″ (3.87 m)	23′-0″ (6.86 m)	6′-3″ (1.9 m)	7′-11″ (2.41 m)	82	390 (176)
	DS 36-1½ (DS 900-1½)	36 (900)	3′-9″ (1140)	22 (560)	4′-4″ (1320)	7′-4″ (2.238 m)	22′-11¼″ (6.98 m)	14′-5¾″ (4.41 m)	3′-10½″ (1.18 m)	3′-8″ (1.119 m)	11′-3½″ (3.44 m)	11′-7¾″ (3.54 m)	4½ (119)	0¾ (20)	30°	8.1 (6.2)	4′-7″ (1.25 m)	7′-7″ (2.31 m)	14′-7″ (4.46 m)	26′-9″ (8.02 m)	7′-7″ (2.31 m)	9′-3″ (2.82 m)	98	530 (239)

Illinois Department of Transportation

APPROVED January 1, 2009
Ralph E. Anderson
ENGINEER OF BRIDGES AND STRUCTURES

APPROVED January 1, 2009
ENGINEER OF DESIGN AND ENVIRONMENT

ISSUED 1-1-97

REINFORCED CONCRETE END SECTIONS FOR PIPE CULVERTS 15″ (375 mm) THRU 36″ (900 mm) DIA. SKEWED WITH ROADWAY

(Sheet 3 of 5)

STANDARD 542201–02

WINGS FOR 1:2 SLOPE

Skew Angle	Design No.	Nominal Pipe Dia.	DIMENSIONS FOR CONCRETE													Concrete 2 End Sections yd³ (m³)	Reinf. Bars - 2 End Sections							Bars for 2 End Sections lbs. (kg)
			A	B	C	D	E	F	G	H	J	K	M	N	α		h - bars				h_1 - bars		v-bars No.	
																	o	p	q	Lgth.	p	Lgth.		
5°	DS 15-2 (DS 375-2)	15 (375)	38 (960)	10 (260)	29 (740)	19 (485)	8′-7¾″ (2.63 m)	4′-8¼″ (1.42 m)	4′-3½″ (1.31 m)	19 (483)	4′-3¾″ (1.31 m)	4′-4″ (1.32 m)	2¾ (70)	2¼ (60)	85°	1.9 (1.5)	4′-7″ (1.33 m)	21 (551)	4′-11″ (1.45 m)	11′-3″ (3.33 m)	551 (551)	3′-5″ (1.04 m)	34	110 (50)
	DS 18-2 (DS 450-2)	18 (450)	38 (960)	13 (330)	32 (810)	22 (561)	8′-10¾″ (2.7 m)	4′-8¼″ (1.42 m)	4′-3½″ (1.31 m)	22 (559)	4′-5¼″ (1.35 m)	4′-5½″ (1.35 m)	2¾ (70)	2¼ (60)	85°	2.0 (1.5)	4′-7″ (1.36 m)	24 (626)	4′-11″ (1.48 m)	11′-6″ (4.47 m)	24 (626)	3′-8″ (1.12 m)	34	120 (54)
	DS 24-2 (DS 600-2)	24 (600)	3′-10″ (1.16 m)	16 (410)	39 (990)	30 (765)	10′-11″ (3.31 m)	5′-8″ (1.72 m)	5′-2½″ (1.58 m)	30 (762)	5′-5¼″ (1.65 m)	5′-5¾″ (1.66 m)	2¾ (70)	2¼ (60)	85°	2.9 (2.2)	5′-5″ (1.62 m)	32 (832)	5′-11″ (1.77 m)	14′-0″ (4.22 m)	32 (832)	4′-4″ (1.32 m)	42	180 (81)
	DS 30-2 (DS 750-2)	30 (750)	4′-4″ (1.32 m)	19 (480)	3′-9″ (1.14 m)	36 (917)	12′-5″ (3.78 m)	6′-5″ (1.96 m)	5′-10½″ (1.79 m)	36 (914)	6′-2¼″ (1.89 m)	6′-2¾″ (1.89 m)	2¾ (70)	2¼ (60)	85°	3.7 (2.8)	6′-3″ (1.84 m)	39 (983)	6′-9″ (2.0 m)	16′-3″ (4.83 m)	39 (983)	4′-11″ (1.50 m)	48	230 (104)
	DS 36-2 (DS 900-2)	36 (900)	5′-0″ (1.52 m)	22 (560)	4′-4″ (1.32 m)	3′-8¼″ (1.123 m)	14′-5″ (4.39 m)	7′-4¾″ (2.25 m)	6′-9¼″ (2.07 m)	3′-8″ (1.119 m)	7′-2¼″ (2.19 m)	7′-2¾″ (2.2 m)	2¾ (70)	2¼ (60)	85°	4.5 (3.4)	7′-2″ (2.12 m)	3′-11″ (1.19 m)	7′-8″ (2.3 m)	18′-9″ (5.6 m)	3′-11″ (1.19 m)	5′-7″ (1.70 m)	54	300 (135)
10°	DS 15-2 (DS 375-2)	15 (375)	38 (960)	10 (260)	29 (740)	19¼ (490)	8′-9″ (2.65 m)	4′-11″ 1.5 m)	4′-1½″ (1.26 m)	19 (483)	4′-4″ (1.32 m)	4′-5″ (1.33 m)	2¾ (70)	2¼ (60)	80°	2.0 (1.5)	4′-4″ (1.28 m)	22 (557)	5′-1″ (1.52 m)	22′-3″ (3.36 m)	22 (557)	3′-6″ (1.07 m)	34	110 (50)
	DS 18-2 (DS 450-2)	18 (450)	38 (960)	13 (330)	32 (810)	22¼ (568)	9′-0″ (2.73 m)	4′-11″ (1.5 m)	4′-1½″ (1.26 m)	22 (559)	4′-5¾″ (1.36 m)	4′-6¼″ (1.37 m)	2¾ (70)	2¼ (60)	80°	2.1 (1.6)	4′-4″ (1.32 m)	25 (633)	5′-1″ (1.55 m)	11′-6″ (3.5 m)	25 (633)	3′-9″ (1.14 m)	34	120 (54)
	DS 24-2 (DS 600-2)	24 (600)	3′-10″ (1.16 m)	16 (410)	39 (990)	30½ (774)	11′-0¼″ (3.34 m)	5′-11½″ (1.81 m)	5′-0″ (1.52 m)	30 (762)	5′-5¾″ (1.66 m)	5′-6½″ (1.68 m)	2¾ (70)	2¼ (60)	80°	3.0 (2.3)	5′-4″ (1.57 m)	33 (841)	6′-2″ (1.85 m)	14′-3″ (4.26 m)	33 (841)	4′-5″ (1.35 m)	42	180 (81)
	DS 30-2 (DS 750-2)	30 (750)	4′-4″ (1.32 m)	19 (480)	3′-9″ (1.14 m)	36½ (928)	12′-6¾″ (3.82 m)	6′-9″ (2.06 m)	5′-8″ (1.73 m)	36 (914)	6′-3″ (1.9 m)	6′-3¾″ (1.92 m)	2¾ (70)	2¼ (60)	80°	3.8 (2.9)	6′-0″ (1.78 m)	39 (993)	7′-0″ (2.1 m)	16′-3″ (4.87 m)	39 (993)	4′-11″ (1.50 m)	48	230 (104)
	DS 36-2 (DS 900-2)	36 (900)	5′-0″ (1.52 m)	22 (560)	4′-4″ (1.32 m)	3′-8¾″ (1.136 m)	14′-7″ (4.44 m)	7′-9¼″ (2.37 m)	6′-6¼″ (1.99 m)	3′-8″ (1.119 m)	7′-3″ (2.21 m)	7′-4″ (2.23 m)	2¾ (70)	2¼ (60)	80°	4.7 (3.6)	7′-0″ (2.04 m)	3′-11″ (1.2 m)	8′-1″ (2.42 m)	19′-0″ (5.66 m)	3′-11″ (1.2 m)	5′-7″ (1.70 m)	54	300 (135)
15°	DS 15-2 (DS 375-2)	15 (375)	38 (960)	10 (260)	29 (740)	19¾ (500)	8′-10¾″ (2.7 m)	5′-2½″ (1.58 m)	4′-0″ (1.21 m)	19 (483)	4′-4¾″ (1.34 m)	4′-6″ (1.36 m)	3 (80)	2 (50)	75°	2.0 (1.5)	4′-3″ (1.24 m)	22 (567)	5′-5″ (1.6 m)	11′-6″ (3.41 m)	22 (567)	3′-6″ (1.07 m)	34	110 (50)
	DS 18-2 (DS 450-2)	18 (450)	38 (960)	13 (330)	32 (810)	22¾ (579)	9′-2″ (2.78 m)	5′-2½″ (1.58 m)	4′-0″ (1.21 m)	22 (559)	4′-6½″ (1.38 m)	4′-7½″ (1.4 m)	3 (80)	2 (50)	75°	2.2 (1.7)	4′-3″ (1.27 m)	25 (644)	5′-5″ (1.64 m)	11′-9″ (3.55 m)	25 (644)	3′-9″ (1.14 m)	34	120 (54)
	DS 24-2 (DS 600-2)	24 (600)	3′-10″ (1.16 m)	16 (410)	39 (990)	31 (789)	11′-2¾″ (3.4 m)	6′-3½″ (1.91 m)	4′-10″ (1.47 m)	30 (762)	5′-6¾″ (1.69 m)	5′-8″ (1.72 m)	3 (80)	2 (50)	75°	3.1 (2.4)	5′-2″ (1.52 m)	34 (857)	6′-6″ (1.95 m)	14′-6″ (4.32 m)	34 (857)	4′-6″ (1.37 m)	42	180 (81)
	DS 30-2 (DS 750-2)	30 (750)	4′-4″ (1.32 m)	19 (480)	3′-9″ (1.14 m)	37¼ (946)	12′-9¼″ (3.89 m)	7′-1½″ (2.17 m)	5′-5½″ (1.67 m)	36 (914)	6′-4″ (1.93 m)	6′-5¼″ (1.96 m)	3 (80)	2 (50)	75°	3.9 (3.0)	5′-10″ (1.72 m)	3′-4″ (1.01 m)	7′-4″ (2.21 m)	16′-6″ (4.94 m)	3′-4″ (1.01 m)	5′-0″ (1.52 m)	52	250 (113)
	DS 36-2 (DS 900-2)	36 (900)	5′-0″ (1.52 m)	22 (560)	4′-4″ (1.32 m)	3′-9½ (1.158)	14′-10¼″ (4.52 m)	8′-2½″ (2.5 m)	6′-3½″ (1.92 m)	3′-8″ (1.119 m)	7′-4½″ (2.25 m)	7′-5¾″ (2.27 m)	3 (80)	2 (50)	75°	5.0 (3.8)	6′-9″ (1.97 m)	4′-0″ (1.22 m)	8′-6″ (2.55 m)	19′-3″ (5.74 m)	4′-0″ (1.22 m)	5′-8″ (1.73 m)	56	310 (140)
20°	DS 15-2 (DS 375-2)	15 (375)	38 (960)	10 (260)	29 (740)	20¼ (514)	9′-1½″ (2.77 m)	5′-6¼″ (1.68 m)	3′-10½″ (1.18 m)	19 (483)	4′-6″ (1.37 m)	4′-7½″ (1.4 m)	3 (80)	2 (50)	70°	2.1 (1.6)	4′-2″ (1.21 m)	23 (581)	5′-8″ (1.69 m)	11′-9″ (3.48 m)	23 (581)	3′-7″ (1.09 m)	36	110 (50)
	DS 18-2 (DS 450-2)	18 (450)	38 (960)	13 (330)	32 (810)	23½ (595)	9′-4½″ (2.85 m)	5′-6¼″ (1.68 m)	3′-10½″ (1.18 m)	22 (559)	4′-7½″ (1.41 m)	4′-9″ (1.44 m)	3 (80)	2 (50)	70°	2.3 (1.8)	4′-2″ (1.24 m)	26 (661)	5′-8″ (1.73 m)	12′-0″ (3.63 m)	26 (661)	3′-10″ (1.17 m)	36	130 (59)
	DS 24-2 (DS 600-2)	24 (600)	3′-10″ (1.16 m)	16 (410)	39 (990)	32 (811)	11′-6¼″ (3.49 m)	6′-8¼″ (2.03 m)	4′-8¼″ (1.42 m)	30 (762)	5′-8½″ (1.73 m)	5′-9¾″ (1.76 m)	3 (80)	2 (50)	70°	3.2 (2.4)	5′-0″ (1.47 m)	35 (879)	6′-10″ (2.07 m)	14′-9″ (4.42 m)	35 (879)	4′-7″ (1.40 m)	48	200 (90)
	DS 30-2 (DS 750-2)	30 (750)	4′-4″ (1.32 m)	19 (480)	3′-9″ (1.14 m)	38¼ (973)	13′-1¼″ (3.99 m)	7′-6¾″ (2.3 m)	5′-3½″ (1.61 m)	36 (914)	6′-6″ (1.98 m)	6′-7¼″ (2.01 m)	3 (80)	2 (50)	70°	4.1 (3.1)	5′-9″ (1.67 m)	3′-5″ (1.04 m)	7′-10″ (2.35 m)	17′-0″ (5.05 m)	3′-5″ (1.04 m)	5′-1″ (1.55 m)	52	250 (113)
	DS 36-2 (DS 900-2)	36 (900)	5′-0″ (1.52 m)	22 (560)	4′-4″ (1.32 m)	3′-10¾″ (1.191 m)	15′-3″ (4.64 m)	8′-8½″ (2.65 m)	6′-1¼″ (1.86 m)	3′-8″ (1.119 m)	7′-6¾″ (2.3 m)	7′-8¼″ (2.34 m)	3 (80)	2 (50)	70°	5.3 (4.1)	6′-6″ (1.91 m)	4′-1″ (1.26 m)	8′-11″ (2.7 m)	19′-6″ (5.87 m)	4′-1″ (1.26 m)	5′-9″ (1.75 m)	58	320 (144)
25°	DS 15-2 (DS 375-2)	15 (375)	38 (960)	10 (260)	29 (740)	21 (533)	9′-5″ (2.86 m)	5′-10¾″ (1.79 m)	3′-9″ (1.14 m)	19 (483)	4′-7½″ (1.41 m)	4′-9½″ (1.45 m)	3¼ (90)	1¾ (50)	65°	2.2 (1.7)	4′-1″ (1.12 m)	23 (600)	6′-0″ (1.8 m)	12′-0″ (3.58 m)	23 (600)	3′-7″ (1.09 m)	38	120 (54)
	DS 18-2 (DS 450-2)	18 (450)	38 (960)	13 (330)	32 (810)	24¼ (617)	9′-8½″ (2.95 m)	5′-10¾″ (1.79 m)	3′-9″ (1.14 m)	22 (559)	4′-9¼″ (1.45 m)	4′-11¼″ (1.5 m)	3¼ (90)	1¾ (50)	65°	2.4 (1.8)	4′-0″ (1.2 m)	27 (683)	6′-0″ (1.85 m)	12′-3″ (3.73 m)	27 (683)	3′-11″ (1.19 m)	42	140 (63)
	DS 24-2 (DS 600-2)	24 (600)	3′-10″ (1.16 m)	16 (410)	39 (990)	33 (841)	11′-11″ (3.61 m)	7′-1½″ (2.16 m)	4′-6½″ (1.38 m)	30 (762)	5′-10½″ (1.78 m)	6′-0½″ (1.83 m)	3¼ (90)	1¾ (50)	65°	3.4 (2.6)	4′-11″ (1.43 m)	35 (909)	7′-4″ (2.2 m)	15′-3″ (4.55 m)	35 (909)	4′-7″ (1.40 m)	48	200 (90)
	DS 30-2 (DS 750-2)	30 (750)	4′-4″ (1.32 m)	19 (480)	3′-9″ (1.14 m)	3′-3¼″ (1.008 m)	13′-6¾″ (4.13 m)	8′-0¾″ (2.46 m)	5′-1¾″ (1.57 m)	36 (914)	6′-8½″ (2.04 m)	6′-10¼″ (2.09 m)	3¼ (90)	1¾ (50)	65°	4.3 (3.3)	5′-6″ (1.62 m)	3′-6″ (1.08 m)	8′-3″ (2.5 m)	17′-3″ (5.2 m)	3′-6″ (1.08 m)	5′-2″ (1.58 m)	52	250 (113)
	DS 36-2 (DS 900-2)	36 (900)	5′-0″ (1.52 m)	22 (560)	4′-4″ (1.32 m)	4′-0½″ (1.235 m)	15′-9¼″ (4.8 m)	9′-3¾″ (2.83 m)	5′-11¼″ (1.81 m)	3′-8″ (1.119 m)	7′-9¾″ (2.38 m)	7′-11½″ (2.42 m)	3¼ (90)	1¾ (50)	65°	5.6 (4.3)	6′-5″ (1.86 m)	4′-3″ (1.3 m)	9′-7″ (2.88 m)	20′-3″ (6.04 m)	4′-3″ (1.3 m)	5′-11″ (1.80 m)	60	330 (149)
30°	DS 15-2 (DS 375-2)	15 (375)	38 (960)	10 (260)	29 (740)	22 (558)	9′-9¾″ (2.98 m)	6′-4″ (1.92 m)	3′-8″ (1.11 m)	19 (483)	4′-9¾″ (1.46 m)	5′-0″ (1.52 m)	3½ (90)	1½ (40)	60°	2.3 (1.8)	4′-0″ (1.15 m)	24 (626)	6′-6″ (1.93 m)	12′-6″ (3.71 m)	24 (626)	3′-8″ (1.12 m)	42	130 (59)
	DS 18-2 (DS 450-2)	18 (450)	38 (960)	13 (330)	32 (810)	25½ (645)	10′-1½″ (3.07 m)	6′-4″ (1.92 m)	3′-8″ (1.11 m)	22 (559)	4′-11½″ (1.51 m)	5′-2″ (1.56 m)	3½ (90)	1½ (40)	60°	2.5 (1.9)	4′-0″ (1.18 m)	28 (712)	6′-5″ (1.98 m)	3.87 m (12′-9″)	28 (712)	4′-0″ (1.22 m)	42	150 (68)
	DS 24-2 (DS 600-2)	24 (600)	3′-10″ (1.16 m)	16 (410)	39 (990)	34¾ (880)	12′-5″ (3.77 m)	7′-8″ (2.32 m)	4′-5″ (1.34 m)	30 (762)	6′-1½″ (1.86 m)	6′-3½″ (1.91 m)	3½ (90)	1½ (40)	60°	3.6 (2.8)	4′-10″ (1.4 m)	37 (949)	7′-10″ (2.37 m)	4.71 m (15′-9″)	37 (949)	4′-9″ (1.45 m)	52	210 (95)
	DS 30-2 (DS 750-2)	30 (750)	4′-4″ (1.32 m)	19 (480)	3′-9″ (1.14 m)	3′-5½″ (1.055 m)	14′-1¾″ (4.31 m)	8′-8″ (2.64 m)	5′-0″ (1.53 m)	36 (914)	6′-11¾″ (2.13 m)	7′-2″ (2.18 m)	3½ (90)	1½ (40)	60°	4.5 (3.4)	5′-6″ (1.58 m)	3′-8″ (1.12 m)	8′-10″ (2.69 m)	5.39 m (18′-0″)	3′-8″ (1.12 m)	5′-4″ (1.63 m)	56	270 (122)
	DS 36-2 (DS 900-2)	36 (900)	5′-0″ (1.52 m)	22 (560)	4′-4″ (1.32 m)	4′-2¾″ (1.292 m)	16′-5½″ (5.01 m)	10′-0″ (3.04 m)	5′-9¼″ (1.76 m)	3′-8″ (1.119 m)	8′1¾″ (2.48 m)	8′-3¾″ (2.53 m)	3½ (90)	1½ (40)	60°	5.9 (4.5)	6′-4″ (1.82 m)	4′-5″ (1.36 m)	10′-3″ (3.09 m)	6.26 m (21′-0″)	4′-5″ (1.36 m)	6′-1″ (1.86 m)	66	360 (162)

Illinois Department of Transportation

APPROVED January 1, 2009
Ralph E. Anderson
ENGINEER OF BRIDGES AND STRUCTURES

APPROVED January 1, 2009
ENGINEER OF DESIGN AND ENVIRONMENT

ISSUED 1-1-97

REINFORCED CONCRETE END SECTIONS FOR PIPE CULVERTS 15″ (375 mm) THRU 36″ (900 mm) DIA. SKEWED WITH ROADWAY

(Sheet 4 of 5)

STANDARD 542201–02

WINGS FOR 1:2 SLOPE

Skew Angle	Design No.	Nominal Pipe Dia.	DIMENSIONS FOR CONCRETE													Concrete 2 End Sections yd³ (m³)	Reinf. Bars - 2 End Sections							Bars for 2 End Sections lbs. (kg)
			A	B	C	D	E	F	G	H	J	K	M	N	α		h - bars				h_1 - bars		v-bars No.	
																	o	p	q	Lgth.	p	Lgth.		
35°	DS 15-2 (DS 375-2)	15 (375)	38 (960)	10 (260)	29 (740)	23¼ (590)	10'-4" (3.14 m)	6'-10¼" (2.08 m)	3'-6¾" (1.08 m)	19 (485)	5'-0¾" (1.54 m)	5'-3¼" (1.6 m)	3¾ (90)	1½ (40)	55°	2.4 (1.8)	3'-11" (1.13 m)	26 (658)	6'-11" (2.09 m)	13'-0" (3.87 m)	26 (658)	3'-10" (1.17 m)	44	140 (63)
	DS 18-2 (DS 450-2)	18 (450)	38 (960)	13 (330)	32 (810)	27 (683)	10'-7¾" (3.23 m)	6'-10¼" (2.08 m)	3'-6¾" (1.09 m)	22 (559)	5'-2½" (1.58 m)	5'-5¼" (1.65 m)	3¾ (90)	1½ (40)	55°	2.6 (2.0)	3'-11" (1.15 m)	29 (750)	6'-11" (2.14 m)	13'-3" (4.04 m)	29 (750)	4'-1" (1.25 m)	44	150 (68)
	DS 24-2 (DS 600-2)	24 (600)	3'-10" (1.16 m)	16 (410)	39 (990)	36½ (930)	13'-1" (3.97 m)	8'-3½" (2.52 m)	4'-3¾" (1.31 m)	30 (762)	6'-5¼" (1.95 m)	6'-7¾" (2.02 m)	3¾ (90)	1½ (40)	55°	3.8 (2.9)	4'-8" (1.37 m)	39 (1.0 m)	8'-4" (2.56 m)	16'-3" (4.93 m)	39 (1.0 m)	4'-11" (1.50 m)	52	220 (99)
	DS 30-2 (DS 750-2)	30 (750)	4'-4" (1.32 m)	19 (480)	3'-9" (1.14 m)	3'-8" (1.116 m)	14'-11" (4.54 m)	9'-4½" (2.86 m)	4'-10½" (1.49 m)	36 (914)	7'-4¼" (2.24 m)	7'-6¾" (2.3 m)	3¾ (90)	1½ (40)	55°	4.8 (3.7)	5'-4" (1.55 m)	3'-11" (1.18 m)	9'-6" (2.9 m)	18'-9" (5.64 m)	3'-11" (1.18 m)	5'-7" (1.70 m)	60	290 (131)
	DS 36-2 (DS 900-2)	36 (900)	5'-0" (1.52 m)	22 (560)	4'-4" (1.32 m)	4'-5¾" (1.366 m)	17'-4¼" (5.28 m)	10'-10" (3.29 m)	5'-7¾" (1.72 m)	3'-8" (1.119 m)	8'-6¾" (2.61 m)	8'-9½" (2.67 m)	3¾ (90)	1½ (40)	55°	6.3 (4.8)	6'-1" (1.78 m)	4'-8" (1.43 m)	11'-0" (3.34 m)	21'-9" (6.55 m)	4'-8" (1.43 m)	6'-4" (1.93 m)	70	380 (171)
40°	DS 15-2 (DS 375-2)	15 (375)	38 (960)	10 (260)	29 (740)	34¾ (631)	11'-0" (3.34 m)	7'-6" (2.27 m)	3'-6" (1.06 m)	19 (485)	5'-4½" (1.63 m)	5'-7½" (1.71 m)	3¾ (100)	1¼ (40)	50°	2.6 (2.0)	3'-10" (1.1 m)	28 (700)	7'-7" (2.28 m)	13'-9" (4.08 m)	28 (700)	3'-11" (1.19 m)	48	150 (68)
	DS 18-2 (DS 450-2)	18 (450)	38 (960)	13 (330)	32 (810)	28¾ (730)	11'-4" (3.44 m)	7'-6" (2.27 m)	3'-6" (1.08 m)	22 (559)	5'-6½" (1.68 m)	5'-9½" (1.76 m)	3¾ (100)	1¼ (40)	50°	2.8 (2.1)	3'-10" (1.13 m)	31 (798)	7'-7" (2.34 m)	14'-0" (4.26 m)	31 (798)	4'-3" (1.30 m)	48	160 (72)
	DS 24-2 (DS 600-2)	24 (600)	3'-10" (1.16 m)	16 (410)	39 (990)	3'-3¼" (995)	13'-11¼" (4.23 m)	9'-0¾" (2.75 m)	4'-2¾" (1.28 m)	30 (762)	6'-10¼" (2.08 m)	7'-1" (2.15 m)	3¾ (100)	1¼ (40)	50°	4.1 (3.1)	4'-7" (1.34 m)	3'-6" (1.07 m)	9'-2" (2.79 m)	17'-3" (5.2 m)	3'-6" (1.07 m)	5'-2" (1.58 m)	58	240 (108)
	DS 30-2 (DS 750-2)	30 (750)	4'-4" (1.32 m)	19 (480)	3'-9" (1.14 m)	3'-11" (1.193 m)	15'-10¾" (4.84 m)	10'-3" (3.12 m)	4'-9½" (1.46 m)	36 (914)	7'-10" (2.38 m)	8'-0¾" (2.46 m)	3¾ (100)	1¼ (40)	50°	5.2 (4.0)	5'-3" (1.52 m)	4'-2" (1.26 m)	10'-4" (3.17 m)	19'-9" (5.95 m)	4'-2" (1.26 m)	5'-10" (1.78 m)	64	310 (140)
	DS 36-2 (DS 900-2)	36 (900)	5'-0" (1.52 m)	22 (560)	4'-4" (1.32 m)	4'-9½" (1.461 m)	18'-6" (5.63 m)	11'-10" (3.6 m)	5'-6¼" (1.68 m)	3'-8" (1.119 m)	9'-1½" (2.78 m)	9'-4½" (2.85 m)	3¾ (100)	1¼ (40)	50°	6.8 (5.2)	6'-0" (1.74 m)	5'-0" (1.53 m)	12'-0" (3.65 m)	23'-0" (6.92 m)	5'-0" (1.53 m)	6'-3" (2.03 m)	78	420 (189)
45°	DS 15-2 (DS 375-2)	15 (375)	38 (960)	10 (260)	29 (740)	27 (683)	11'-10¼" (3.6 m)	8'-3¼" (2.51 m)	3'-5¼" (1.04 m)	19 (485)	5'-9½" (1.76 m)	6'-0¾" (1.84 m)	4 (100)	1¼ (30)	45°	2.8 (2.1)	3'-9" (1.09 m)	29 (753)	8'-4" (2.51 m)	14'-6" (4.35 m)	29 (753)	4'-1" (1.25 m)	48	150 (68)
	DS 18-2 (DS 450-2)	18 (450)	38 (960)	13 (330)	32 (810)	31 (791)	12'-2½" (3.7 m)	8'-3¼" (2.51 m)	3'-5¼" (1.04 m)	22 (559)	5'-11½" (1.81 m)	6'-3" (1.89 m)	4 (100)	1¼ (30)	45°	3.1 (2.4)	3'-10" (1.11 m)	34 (859)	8'-4" (2.58 m)	15'-0" (4.55 m)	34 (859)	4'-6" (1.37 m)	52	180 (81)
	DS 24-2 (DS 600-2)	24 (600)	3'-10" (1.16 m)	16 (410)	39 (990)	3'-6½" (1.078 m)	15'-0¼" (4.56 m)	10'-0¼" (3.03 m)	4'-1¾" (1.26 m)	30 (762)	7'-4½" (2.24 m)	7'-7¾" (2.32 m)	4 (100)	1¼ (30)	45°	4.4 (3.4)	4'-6" (1.32 m)	3'-9" (1.15 m)	10'-0" (3.08 m)	18'-3" (5.55 m)	3'-9" (1.15 m)	5'-5" (1.65 m)	60	250 (113)
	DS 30-2 (DS 750-2)	30 (750)	4'-4" (1.32 m)	19 (480)	3'-9" (1.14 m)	4'-3" (1.293 m)	17'-1¾" (5.23 m)	11'-4" (3.45 m)	4'-8¼" (1.43 m)	36 (914)	8'-5¼" (2.57 m)	8'-8½" (2.66 m)	4 (100)	1¼ (30)	45°	5.6 (4.3)	5'-2" (1.49 m)	4'-5" (1.36 m)	11'-5" (3.5 m)	21'-0" (6.35 m)	4'-5" (1.36 m)	6'-1" (1.86 m)	72	340 (153)
	DS 36-2 (DS 900-2)	36 (900)	5'-0" (1.52 m)	22 (560)	4'-4" (1.32 m)	5'-2¼" (1.583 m)	19'-11¾" (6.08 m)	13'-0¾" (3.97 m)	5'-5" (1.65 m)	3'-8" (1.119 m)	9'-10¼" (3.0 m)	10'-1½" (3.08 m)	4 (100)	1¼ (30)	45°	7.4 (5.7)	5'-11" (1.71 m)	5'-5" (1.65 m)	13'-2" (4.02 m)	24'-6" (7.39 m)	5'-5" (1.65 m)	7'-1" (2.16 m)	82	450 (203)
50°	DS 15-2 (DS 375-2)	15 (375)	38 (960)	10 (260)	29 (740)	29½ (751)	12'-11½" (3.93 m)	9'-3" (2.81 m)	3'-4½" (1.03 m)	19 (485)	6'-4" (1.92 m)	6'-7½" (2.01 m)	4¼ (110)	1 (30)	40°	3.1 (2.4)	3'-9" (1.07 m)	32 (822)	9'-4" (2.81 m)	15'-9" (4.7 m)	32 (822)	4'-4" (1.32 m)	54	170 (77)
	DS 18-2 (DS 450-2)	18 (450)	38 (960)	13 (330)	32 (810)	34¼ (870)	13'-4¼" (4.05 m)	9'-3" (2.81 m)	3'-4½" (1.03 m)	22 (559)	6'-6¼" (1.98 m)	6'-10" (2.07 m)	4¼ (110)	1 (30)	40°	3.4 (2.6)	3'-8" (1.1 m)	37 (939)	9'-3" (2.88 m)	16'-0" (4.92 m)	37 (939)	4'-9" (1.45 m)	54	190 (86)
	DS 24-2 (DS 600-2)	24 (600)	3'-10" (1.16 m)	16 (410)	39 (990)	3'-10¾" (1.185 m)	16'-5½" (4.99 m)	11'-2½" (3.39 m)	4'-1" (1.24 m)	30 (762)	8'-1" (2.45 m)	8'-4½" (2.54 m)	4¼ (110)	1 (30)	40°	4.8 (3.7)	4'-6" (1.3 m)	4'-1" (1.26 m)	11'-2" (3.44 m)	19'-9" (6.0 m)	4'-1" (1.26 m)	5'-9" (1.75 m)	68	280 (126)
	DS 30-2 (DS 750-2)	30 (750)	4'-4" (1.32 m)	19 (480)	3'-9" (1.14 m)	4'-8" (1.422 m)	18'-9½" (5.72 m)	12'-8" (3.86 m)	4'-7¼" (1.41 m)	36 (914)	9'-3" (2.82 m)	9'-6½" (2.92 m)	4¼ (110)	1 (30)	40°	6.2 (4.7)	5'-1" (1.47 m)	4'-10" (1.49 m)	12'-9" (3.91 m)	22'-9" (6.87 m)	4'-10" (1.49 m)	6'-6" (1.98 m)	78	370 (167)
	DS 36-2 (DS 900-2)	36 (900)	5'-0" (1.52 m)	22 (560)	4'-4" (1.32 m)	5'-8½" (1.741 m)	21'-10¾" (6.67 m)	14'-7½" (4.45 m)	5'-3¾" (1.62 m)	3'-8" (1.119 m)	10'-9½" (3.29 m)	11'-1¼" (3.38 m)	4¼ (110)	1 (30)	40°	8.1 (6.2)	5'-10" (1.69 m)	5'-11" (1.81 m)	14'-9" (4.5 m)	26'-6" (8.0 m)	5'-11" (1.81 m)	7'-7" (2.31 m)	90	490 (221)
55°	DS 15-2 (DS 375-2)	15 (375)	38 (960)	10 (260)	29 (740)	33 (842)	14'-5" (4.38 m)	10'-6¼" (3.2 m)	3'-4" (1.01 m)	19 (485)	7'-0½" (2.14 m)	7'-4½" (2.24 m)	4½ (110)	1 (30)	35°	3.4 (2.6)	3'-8" (1.06 m)	36 (914)	10'-7" (3.18 m)	17'-3" (5.17 m)	36 (914)	4'-8" (1.42 m)	60	180 (81)
	DS 18-2 (DS 450-2)	18 (450)	38 (960)	13 (330)	32 (810)	38¼ (975)	14'-10¼" (14'-10¼")	10'-6¼" (3.2 m)	3'-4" (1.01 m)	22 (559)	7'-3¼" (2.21 m)	7'-7" (2.3 m)	4½ (110)	1 (30)	35°	3.7 (2.8)	3'-9" (1.08 m)	3'-5" (1.05 m)	10'-7" (3.27 m)	17'-9" (5.4 m)	3'-5" (1.05 m)	5'-1" (1.55 m)	60	210 (95)
	DS 24-2 (DS 600-2)	24 (600)	3'-10" (1.16 m)	16 (410)	39 (990)	4'-4¼" (1.329 m)	14'-10¼" (5.56 m)	12'-9" (3.86 m)	4'-0¼" (1.22 m)	30 (762)	9'-0¼" (2.73 m)	9'-4" (2.83 m)	4½ (110)	1 (30)	35°	5.4 (4.1)	4'-5" (1.29 m)	4'-7" (1.4 m)	12'-9" (3.91 m)	21'-9" (6.6 m)	4'-7" (1.4 m)	6'-3" (1.91 m)	74	300 (135)
	DS 30-2 (DS 750-2)	30 (750)	4'-4" (1.32 m)	19 (480)	3'-9" (1.14 m)	5'-2¾" (1.594 m)	20'-11½" (6.39 m)	14'-5" (4.39 m)	4'-6½" (1.39 m)	36 (914)	10'-3¾" (3.15 m)	10'-7¾" (3.24 m)	4½ (110)	1 (30)	35°	6.9 (5.3)	5'-1" (1.45 m)	5'-6" (1.66 m)	14'-6" (4.44 m)	25'-0" (7.56 m)	5'-6" (1.66 m)	7'-2" (2.19 m)	88	420 (189)
	DS 36-2 (DS 900-2)	36 (900)	5'-0" (1.52 m)	22 (560)	4'-4" (1.32 m)	6'-4¾" (1.951 m)	24'-5¼" (7.44 m)	16'-7½" (5.06 m)	5'-3" (1.61 m)	3'-8" (1.119 m)	12'-0¾" (3.67 m)	12'-4¾" (3.77 m)	4½ (110)	1 (30)	35°	9.1 (7.0)	5'-10" (1.67 m)	6'-7" (2.02 m)	16'-7" (5.11 m)	29'-0" (8.8 m)	6'-7" (2.02 m)	8'-3" (2.52 m)	102	550 (248)
60°	DS 15-2 (DS 375-2)	15 (375)	38 (960)	10 (260)	29 (740)	38 (966)	16'-5¼" (4.99 m)	12'-2¾" (3.71 m)	3'-3¼" (1.0 m)	19 (485)	8'-0½" (2.44 m)	8'-4¾" (2.55 m)	4½ (120)	0¾ (20)	30°	3.9 (3.0)	3'-8" (1.05 m)	3'-5" (1.04 m)	12'-2" (3.7 m)	19'-3" (5.79 m)	3'-5" (1.04 m)	5'-1" (1.55 m)	64	200 (90)
	DS 18-2 (DS 450-2)	18 (450)	38 (960)	13 (330)	32 (810)	3'-8" (1.118 m)	16'-11¼" (5.15 m)	12'-2¾" (3.71 m)	3'-3¼" (1.0 m)	22 (559)	8'-3½" (2.52 m)	8'-7¾" (2.63 m)	4½ (120)	0¾ (20)	30°	4.2 (3.2)	3'-8" (1.07 m)	3'-11" (1.19 m)	12'-2" (3.8 m)	19'-9" (6.06 m)	3'-11" (1.19 m)	5'-7" (1.70 m)	70	240 (108)
	DS 24-2 (DS 600-2)	24 (600)	3'-10" (1.16 m)	16 (410)	39 (990)	5'-0" (1.524 m)	20'-11¼" (6.35 m)	14'-9¾" (4.48 m)	3'-11¾" (1.2 m)	30 (762)	10'-3½" (3.12 m)	10'-7¾" (3.23 m)	4½ (120)	0¾ (20)	30°	6.1 (4.7)	4'-5" (1.27 m)	5'-3" (1.6 m)	14'-10" (4.54 m)	24'-6" (7.41 m)	5'-3" (1.6 m)	6'-11" (2.11 m)	86	350 (158)
	DS 30-2 (DS 750-2)	30 (750)	4'-4" (1.32 m)	19 (480)	3'-9" (1.14 m)	6'-0" (1.828 m)	23'-11¼" (7.29 m)	16'-9" (5.1 m)	4'-5¾" (1.37 m)	36 (914)	11'-9½" (3.59 m)	12'-1¾" (3.7 m)	4½ (120)	0¾ (20)	30°	7.9 (6.0)	5'-0" (1.44 m)	6'-3" (1.9 m)	16'-9" (5.16 m)	28'-0" (8.5 m)	6'-3" (1.9 m)	7'-11" (2,41 m)	100	470 (212)
	DS 36-2 (DS 900-2)	36 (900)	5'-0" (1.52 m)	22 (560)	4'-4" (1.32 m)	7'-4" (2.238 m)	27'-11¼" (8.51 m)	19'-3¾" (5.88 m)	5'-2" (1.57 m)	3'-8" (1.119 m)	13'-9½" (4.2 m)	14'-1¾" (4.31 m)	4½ (120)	0¾ (20)	30°	10.4 (8.0)	5'-10" (1.65 m)	7'-7" (2.31 m)	19'-4" (5.94 m)	32'-9" (9.89 m)	7'-7" (2.31 m)	9'-3" (2.82 m)	114	620 (279)

Illinois Department of Transportation

APPROVED January 1, 2009
Ralph E. Anderson
ENGINEER OF BRIDGES AND STRUCTURES

APPROVED January 1, 2009
ENGINEER OF DESIGN AND ENVIRONMENT

ISSUED 1-1-97

REINFORCED CONCRETE END SECTIONS FOR PIPE CULVERTS 15" (375 mm) THRU 36" (900 mm) DIA. SKEWED WITH ROADWAY

(Sheet 5 of 5)

STANDARD 542201–02