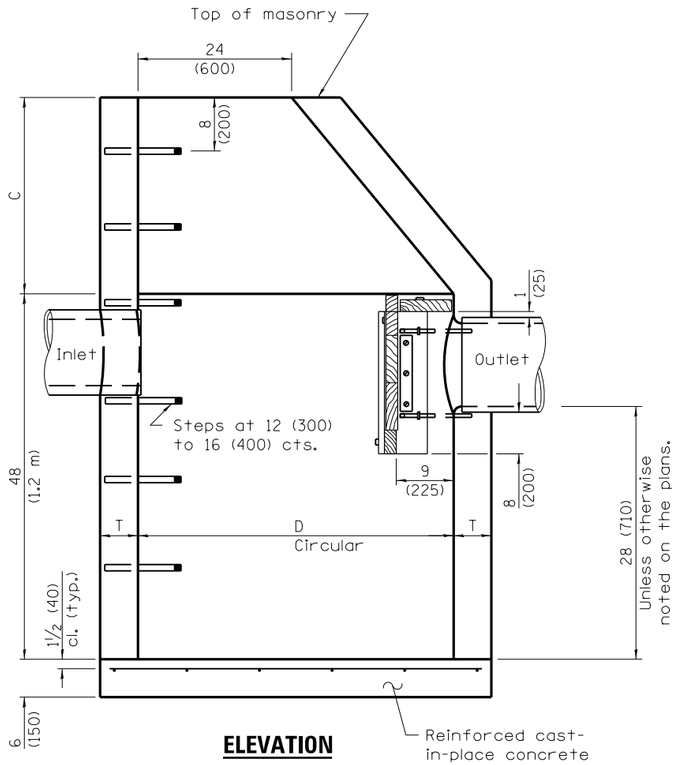

ELEVATION

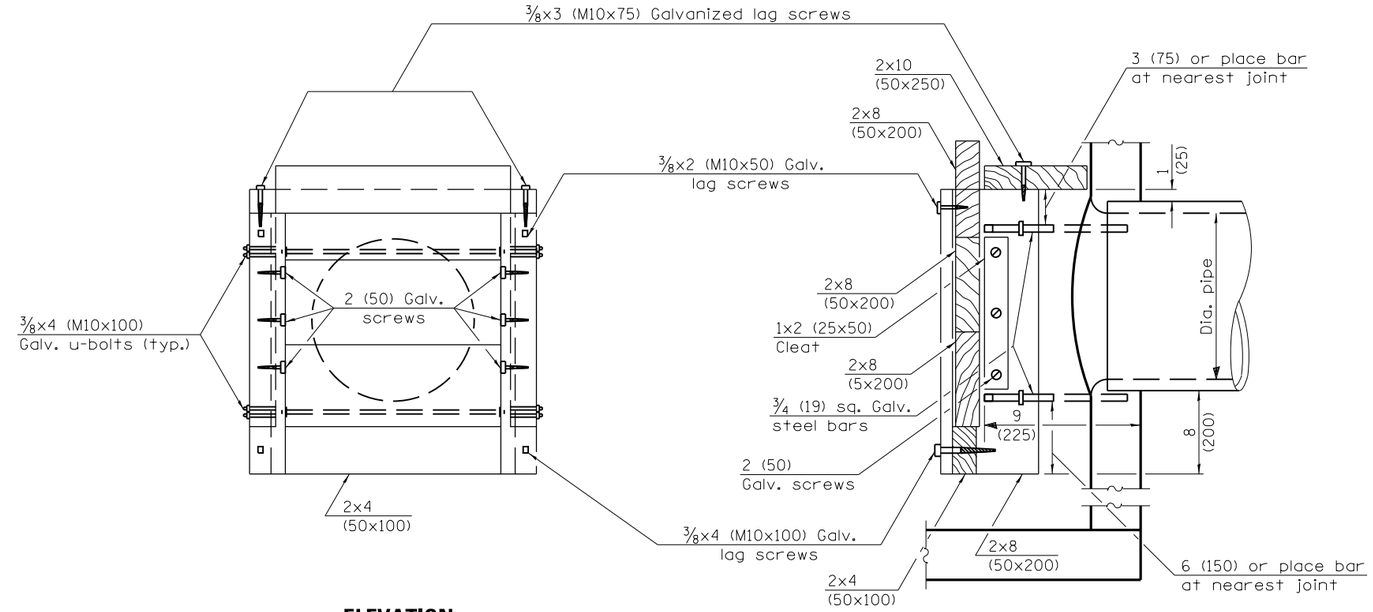

ELEVATION

SECTION A–A

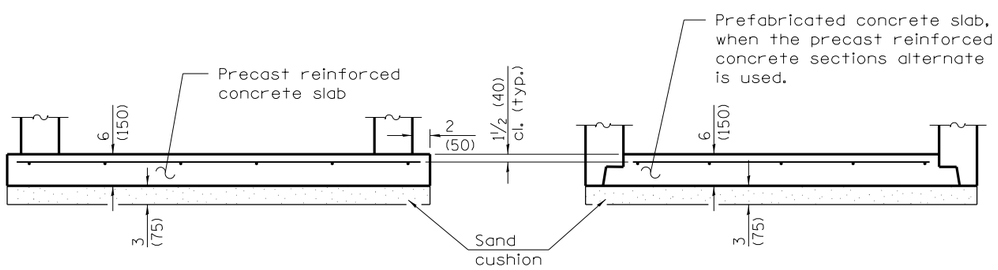

ALTERNATE BOTTOM SLAB

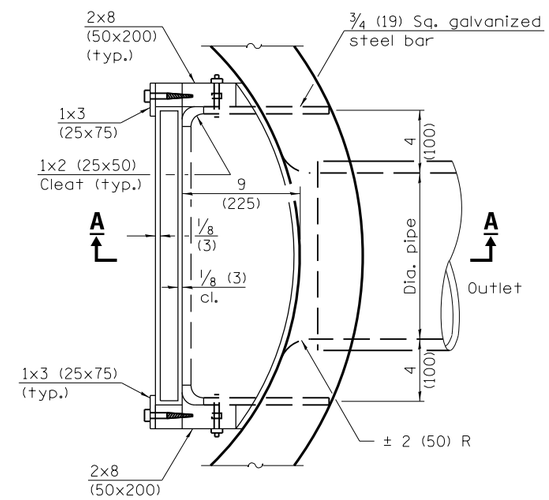

PLAN

ALTERNATE MATERIALS FOR WALLS	D	C*	T (min.)
Concrete Masonry Unit	36 (900) 4′-0″ (1.20 m)	15 (380) 30 (760)	5 (125) 5 (125)
Brick Masonry	36 (900) 4′-0″ (1.20 m)	15 (380) 30 (760)	8 (200) 8 (200)
Precast Reinforced Concrete Section	36 (900) 4′-0″ (1.20 m)	15 (380) 30 (760)	3 (75) 4 (100)
Cast-in-Place Concrete	36 (900) 4′-0″ (1.20 m)	15 (380) 30 (760)	6 (150) 6 (150)

* For precast reinforced concrete sections, dimension "C" may vary from the dimension given to plus 6 (150).

GENERAL NOTES

Bottom slabs shall be reinforced with a minimum of 0.20 sq. in./ft. (420 sq. mm/m) in both directions with a maximum spacing of 12 (300).

Bottom slabs may be connected to the riser as determined by the fabricator; however, only a single row of reinforcement around the perimeter may be utilized.

See Standard 602701 for details of steps.

See Standard 602601 for optional precast reinforced concrete flat slab top.

All dimensions are in inches (millimeters) unless otherwise shown.

Illinois Department of Transportation

PASSED January 1, 2011
Michael Brand
ENGINEER OF POLICY AND PROCEDURES

APPROVED January 1, 2011
Scott E. Stitt
ENGINEER OF DESIGN AND ENVIRONMENT

ISSUED 1-1-97

DATE	REVISIONS
1-1-11	Detailed reinforcement in
	slabs. Revised general
	notes.
1-1-09	Switched units to
	English (metric).

CATCH BASIN TYPE D

STANDARD 602016–02