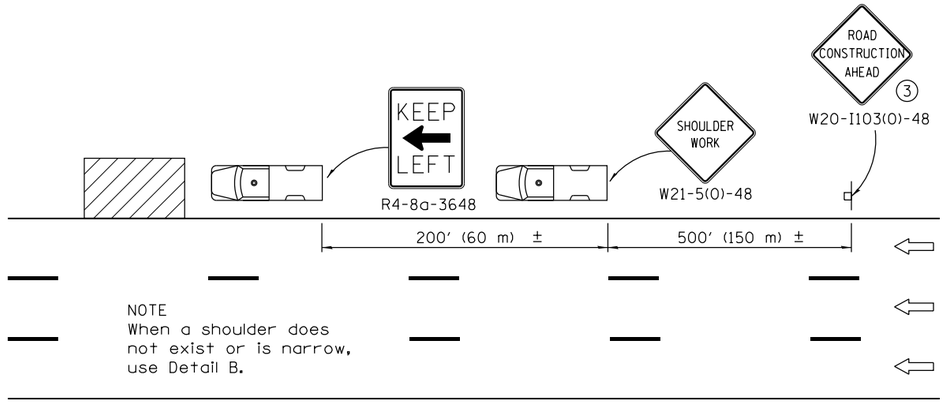

DETAIL A

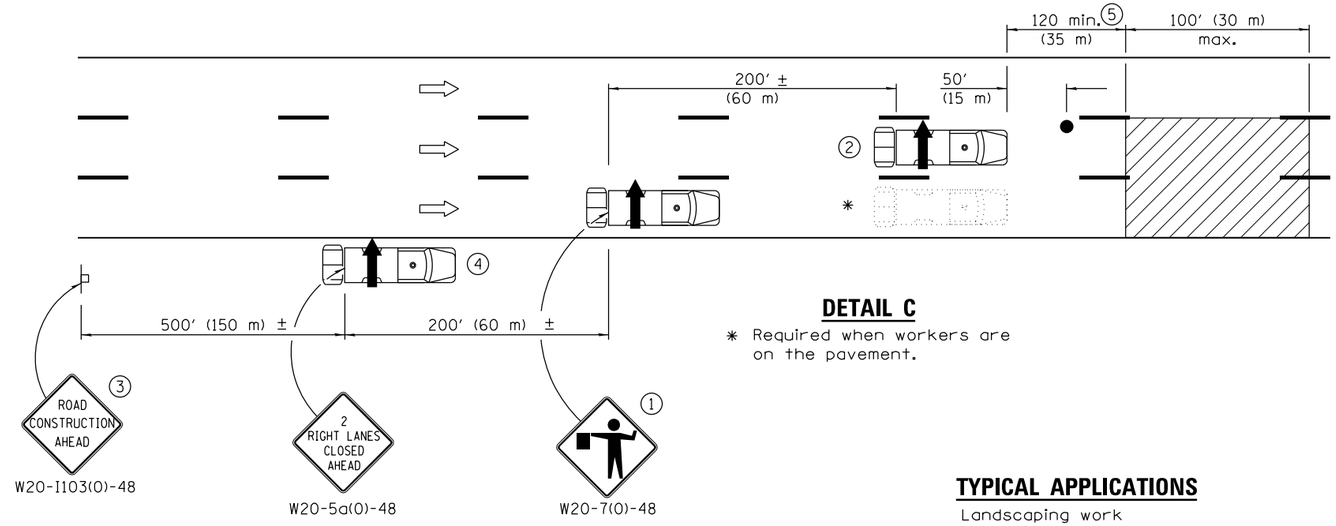

DETAIL C

* Required when workers are on the pavement.

TYPICAL APPLICATIONS

Landscaping work
Utility work
Pavement marking
Weed spraying
Roadometer measurements
Debris cleanup
Crack pouring

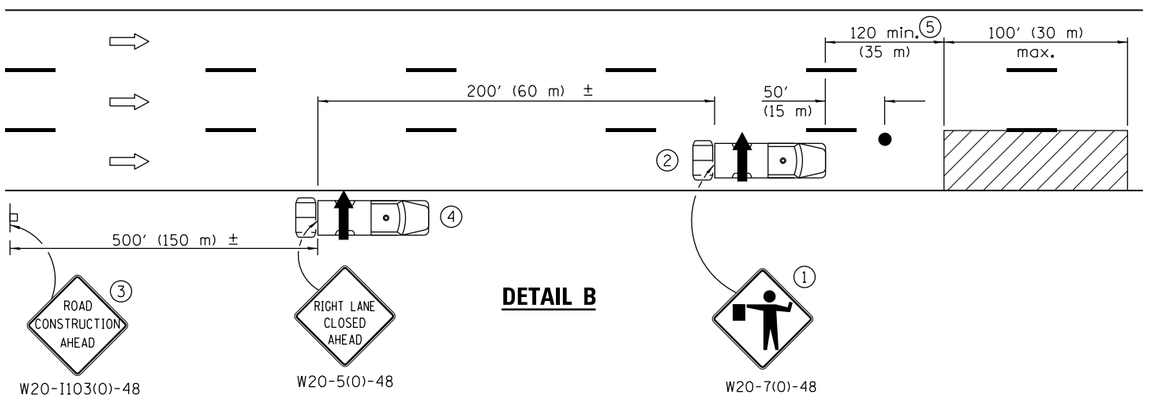

DETAIL B

1. Flaggers are required when workers are on the pavement.
2. For striping operations only. See sign arrow detail on this standard.
3. For stationary operations which are on the roadway or shoulder, greater than 15 minutes and up to 1 hour.
4. Omit truck, attenuator and arrow board when no shoulder exists due to curb and gutter.
5. The distance between the work and the lead truck may vary according to terrain or paint/crack sealing time.

G20-I101-2430
(appropriate arrow)
2 (when striping only)

GENERAL NOTES

This Standard is used where any vehicle, equipment, workers or their activities will require: 1) stationary operations up to 1 hour, or 2) a continuous or intermittent moving operation where the average speed of movement is greater than 1 mph (2 km/h).

This Standard is also applicable when work is being performed in the left lane(s) or on the median shoulder. Under these conditions, KEEP RIGHT signs shall be substituted for KEEP LEFT signs and arrow board indications shall be directed to the right.

All dimensions are in inches (millimeter) unless otherwise shown.

SYMBOLS

- Arrow board
- Work area
- Truck with flashing amber light
- Truck/Trailer mounted attenuator
- Flagger with traffic control sign
- Sign

Illinois Department of Transportation

APPROVED January 1, 2017
ENGINEER OF SAFETY PROG. AND ENGINEERING

APPROVED January 1, 2017
ENGINEER OF DESIGN AND ENVIRONMENT

ISSUED 1-1-11

DATE	REVISIONS
1-1-17	Revised 'NOTE' on DETAIL A
	to use DETAIL B in lieu of
	DETAIL C.
4-1-16	Rev. gen. notes. Added
	note 5. Rev. dist. between
	work and lead truck.

LANE CLOSURE, MULTILANE, INTERMITTENT OR MOVING OPER., FOR SPEEDS ≤ 40 MPH

STANDARD 701427–05