LIGHT POLE MOUNTING HEIGHT	BOLT CIRCLE DIAMETER	METAL FOUNDATION SHAFT DIAMETER	METAL FOUNDATION SHAFT DEPTH	METAL FOUNDATION TOP PLATE (min)	CONCRETE FOUNDATION SHAFT DIAMETER	CONCRETE FOUNDATION SHAFT DEPTH	CONCRETE FOUNDATION ANCHOR ROD LENGTH (1)
≤30′ (9.1 m)	11½ (292)	8⅝ (220)	6′ (1.83 m)	12 x 12 x 1 (300 x 300 x 25)	24 (610)	5′-0″ (1.52 m)	4′-9″ (1.45 m)
31′-35′ (9.4 m - 10.7 m)	11½ (292)	8⅝ (220)	6′ (1.83 m)	12 x 12 x 1 (300 x 300 x 25)	24 (610)	5′-6″ (1.67 m)	5′-3″ (1.60 m)
36′-40′ (10.9 m - 12.2 m)	15 (381) (3)	8⅝ (220)	6′ (1.83 m) (2)	15 x 15 x 1¼ (375 x 375 x 31)	30 (762)	6′-0″ (1.83 m)	5′-9″ (1.75 m)
41′-45′ (12.5 m - 13.7 m)	15 (381) (3)	8⅝ (220)	6′ (1.83 m) (2)	15 x 15 x 1¼ (375 x 375 x 31)	30 (762)	6′-6″ (1.98 m)	6′-3″ (1.90 m)
46′-50′ (14.0 m - 15.2 m)	15 (381) (3)	8⅝ (220)	8′ (2.44 m)	15 x 15 x 1¼ (375 x 375 x 31)	30 (762)	7′-0″ (2.13 m)	6′-9″ (2.00 m)

(1) Length does not include 4 (100) hook.

(2) 8⅝ x 8′-0″ (220 x 2.44 m) for twin luminaires.

(3) Bolt circle diam. shall be 17 (430) when a transformer base is used.

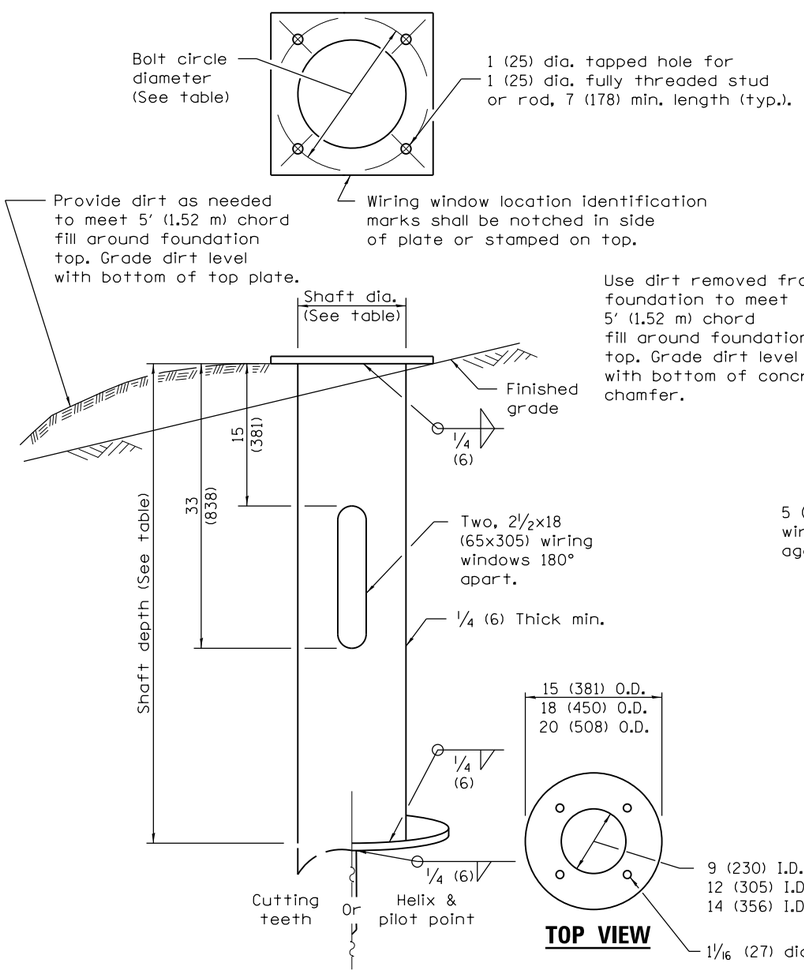

METAL FOUNDATION

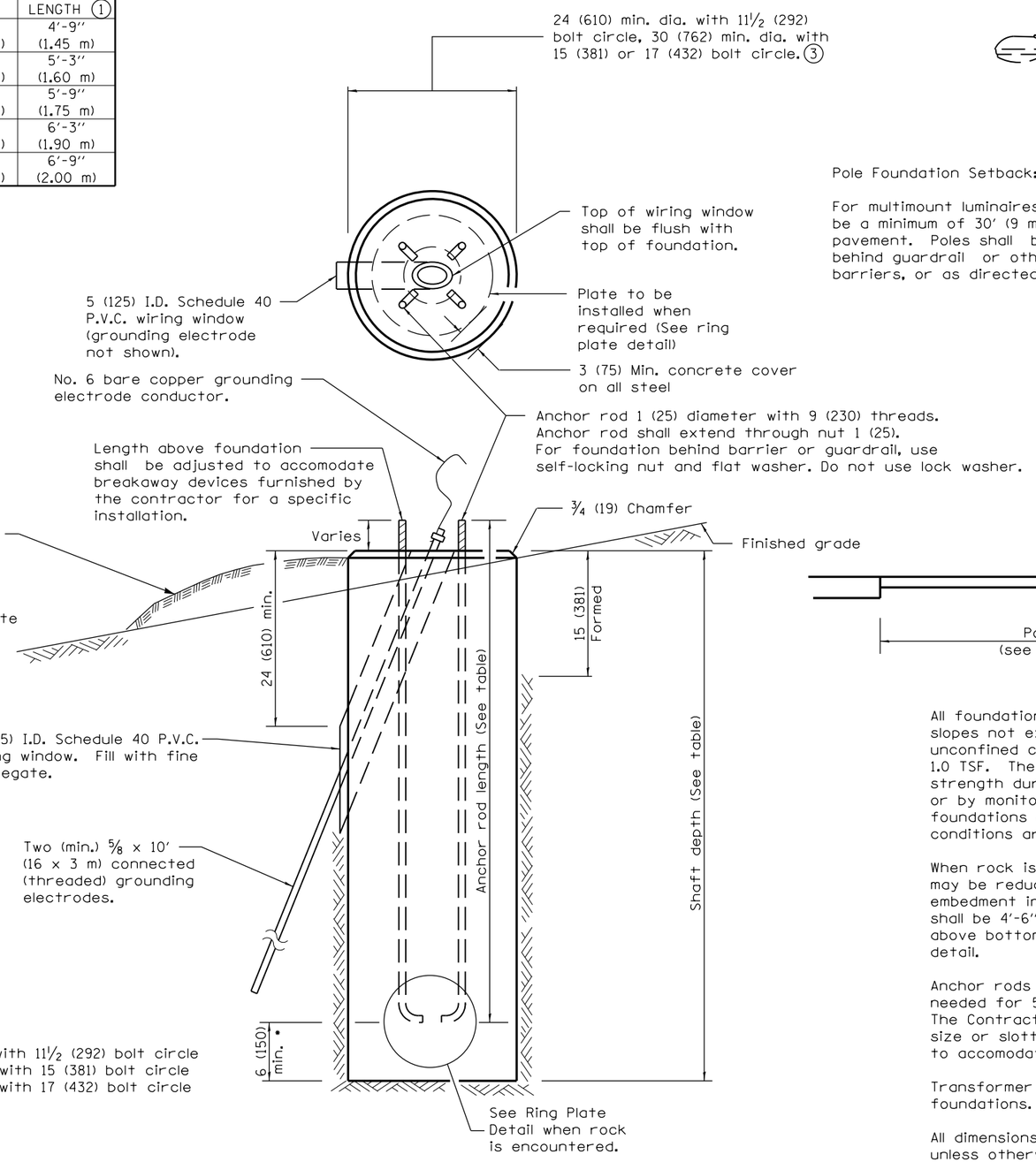

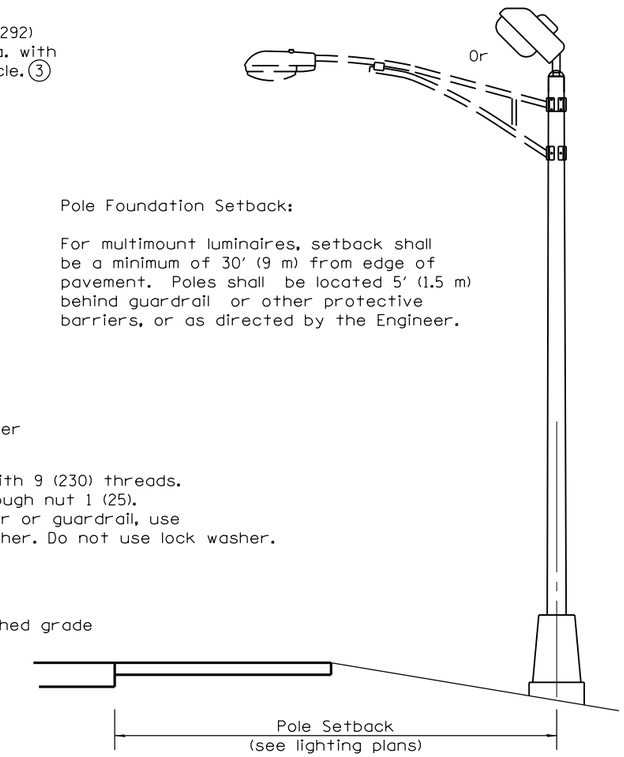

Pole Foundation Setback:

For multimount luminaires, setback shall be a minimum of 30′ (9 m) from edge of pavement. Poles shall be located 5′ (1.5 m) behind guardrail or other protective barriers, or as directed by the Engineer.

GENERAL NOTES

All foundations are designed to be located on slopes not exceeding 2:1 where soils have an unconfined compressive strength of at least 1.0 TSF. The Contractor shall verify the soil strength during drilling for concrete foundations or by monitoring installation resistance of metal foundations and notify the Engineer if other conditions are encountered.

When rock is encountered the foundation depth may be reduced 6 (150) for every 12 (300) of embedment in rock. The minimum foundation depth shall be 4′-6″ (1.37 m) with cut anchor rods 6 (150) above bottom of excavated hole. See ring plate detail.

Anchor rods shall be increased in diameter as needed for 50′ (15.2 m) mounting height or above. The Contractor shall match the breakaway device size or slotted hole size in the pole base plate to accomodate larger rod sizes.

Transformer bases shall not be used on metal foundations.

All dimensions are in inches (millimeters) unless otherwise shown.

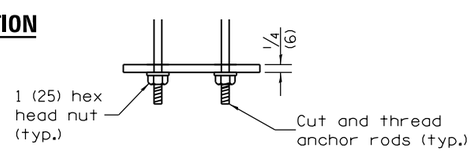

RING PLATE DETAIL

• If the required anchor rod length above top of foundation is less than 3 (75), anchor rods may be lowered below 6 (150).

CONCRETE FOUNDATION

DATE	REVISIONS
1-1-13	Revised concrete foundation
	notes, pole foundation set-
	back notes, ring plate det.
1-1-12	Revised metal foundation
	wiring window dimensions.

Illinois Department of Transportation

PASSED January 1, 2013
(Acting)
ENGINEER OF PRELIMINARY ENGINEERING

APPROVED January 1, 2013
ENGINEER OF DESIGN AND ENVIRONMENT

ISSUED 1-1-10

LIGHT POLE FOUNDATION

STANDARD 836001–02