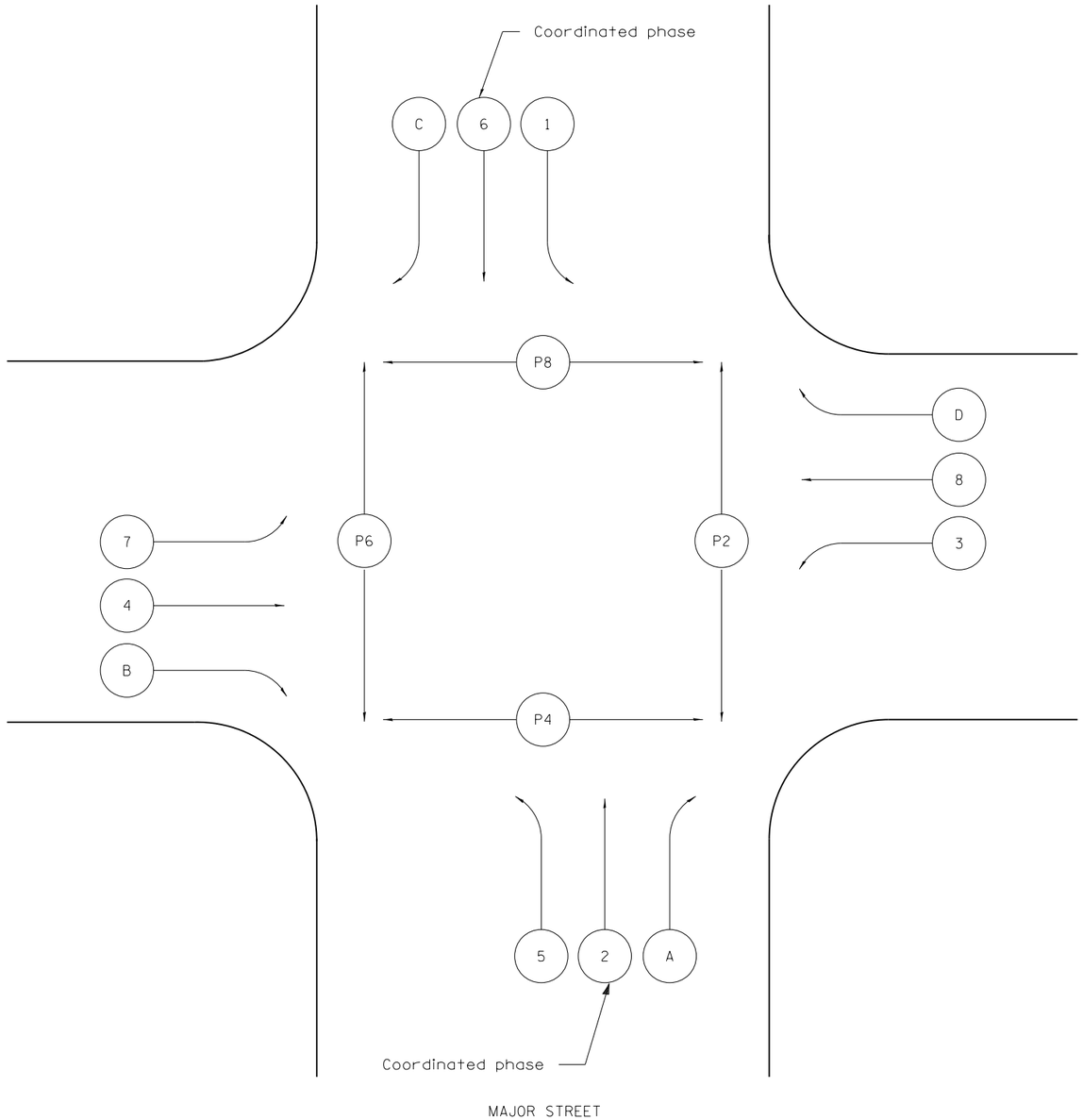

STANDARD PHASE DESIGNATION DIAGRAM (NEMA)

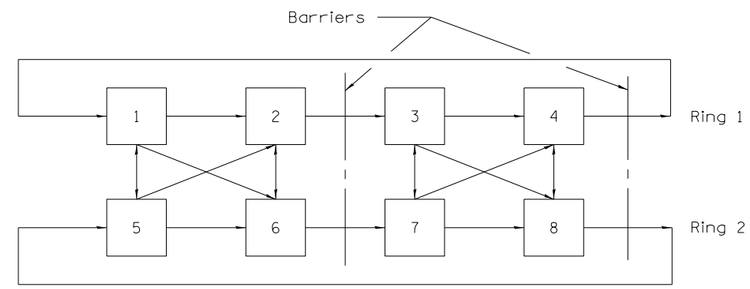

NEMA EIGHT PHASE DUAL RING ACTUATED CONFIGURATION

LEGEND

(X), [X]	Vehicular phase no. x
(PX)	Pedestrian phase no. x
(A), (B), (C), (D)	Right turn overlaps where:
(A) = (2) + (3)	
(B) = (4) + (5)	
(C) = (6) + (7)	
(D) = (8) + (1)	
NEMA	National Electrical Manufacturers Association

Illinois Department of Transportation

APPROVED January 1, 2009
ENGINEER OF OPERATIONS

APPROVED January 1, 2009
ENGINEER OF DESIGN AND ENVIRONMENT

ISSUED 1-1-97

DATE	REVISIONS
1-1-09	Omitted note regarding units of length.
1-1-97	Renum. Standard 2393-2.

STANDARD PHASE DESIGNATION DIAGRAMS AND PHASE SEQUENCES

(Sheet 1 of 2)

STANDARD 857001-01

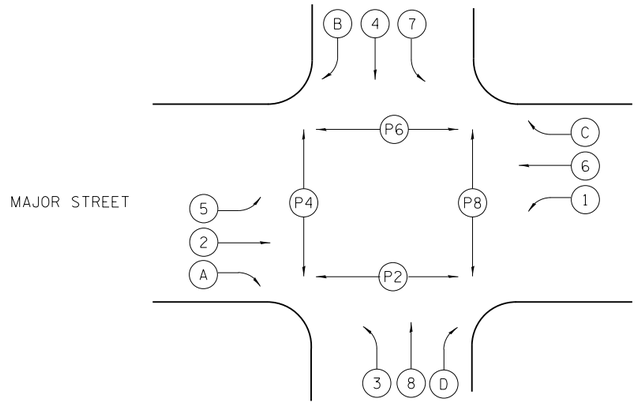

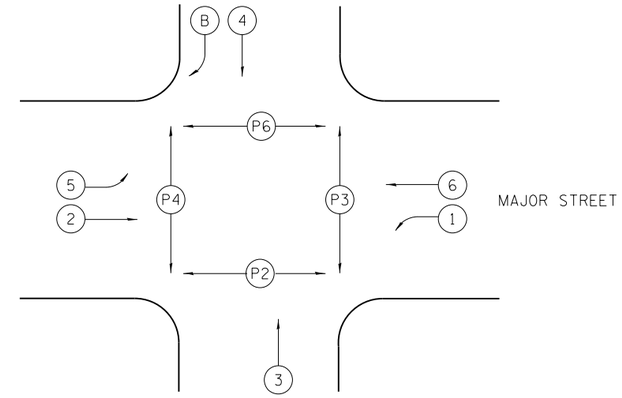

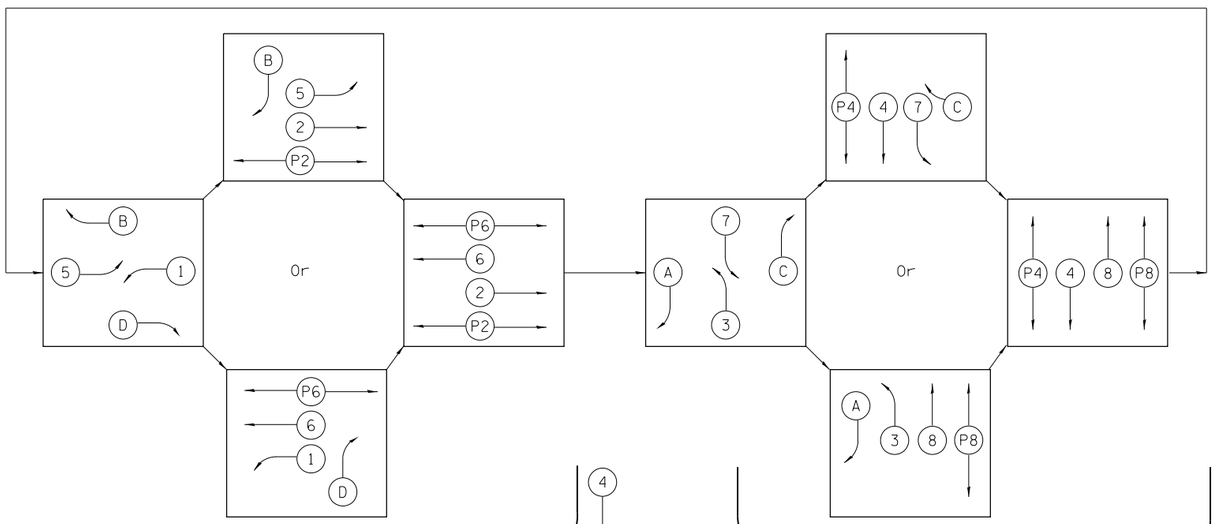

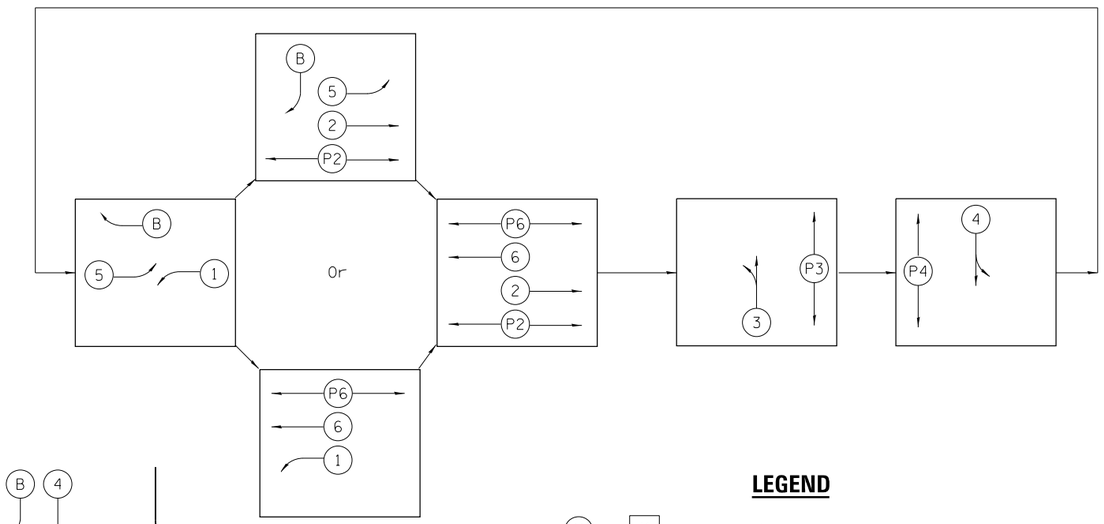

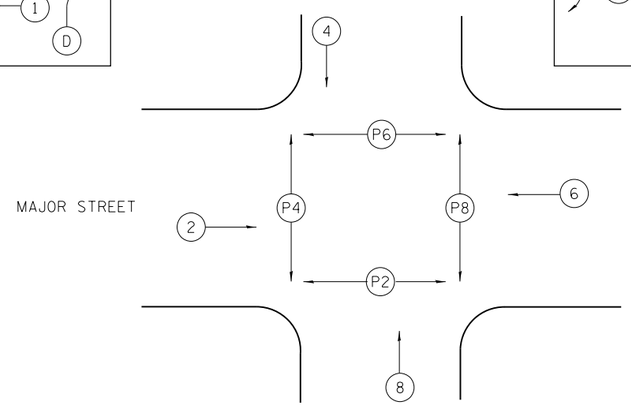

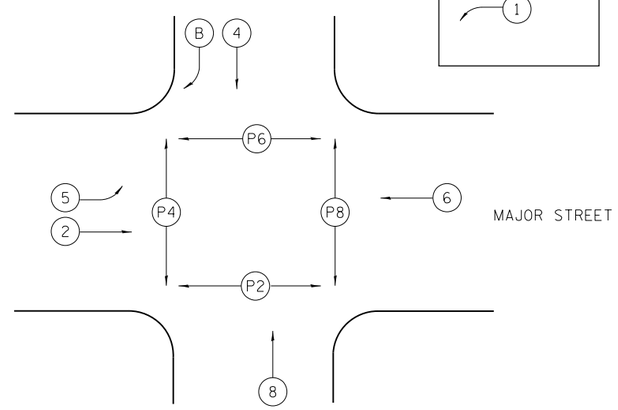

LEGEND

(X), [X]	Vehicular phase no. x
(PX)	Pedestrian phase no. x
(A), (B), (C), (D)	Right turn overlaps where:
(A) = (2) + (3)	
(B) = (4) + (5)	
(C) = (6) + (7)	
(D) = (8) + (1)	
NEMA	National Electrical Manufacturers Association

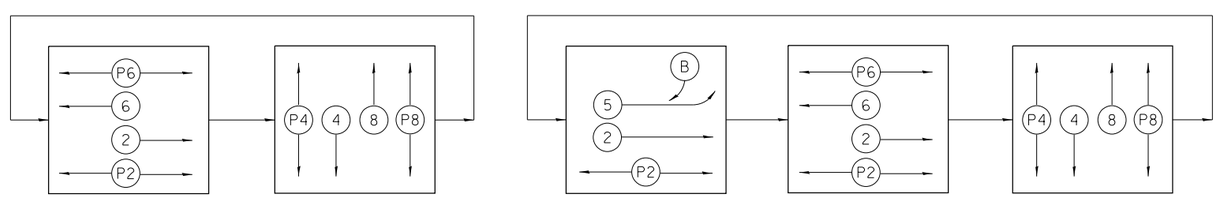

PHASE DESIGNATION DIAGRAMS AND CORRESPONDING PHASE SEQUENCES

Illinois Department of Transportation

APPROVED January 1, 2009
ENGINEER OF OPERATIONS

APPROVED January 1, 2009
ENGINEER OF DESIGN AND ENVIRONMENT

ISSUED 1-1-97

STANDARD PHASE DESIGNATION DIAGRAMS AND PHASE SEQUENCES

(Sheet 2 of 2)

STANDARD 857001-01