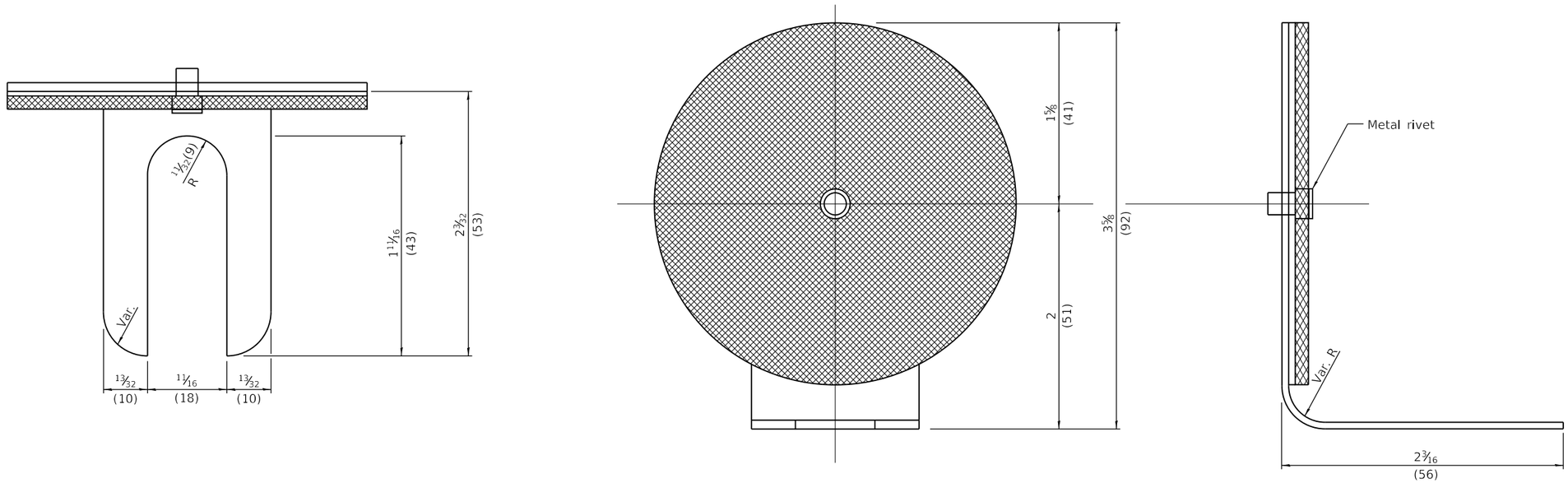


**REFLECTOR TYPE A**

(monodirectional shown)

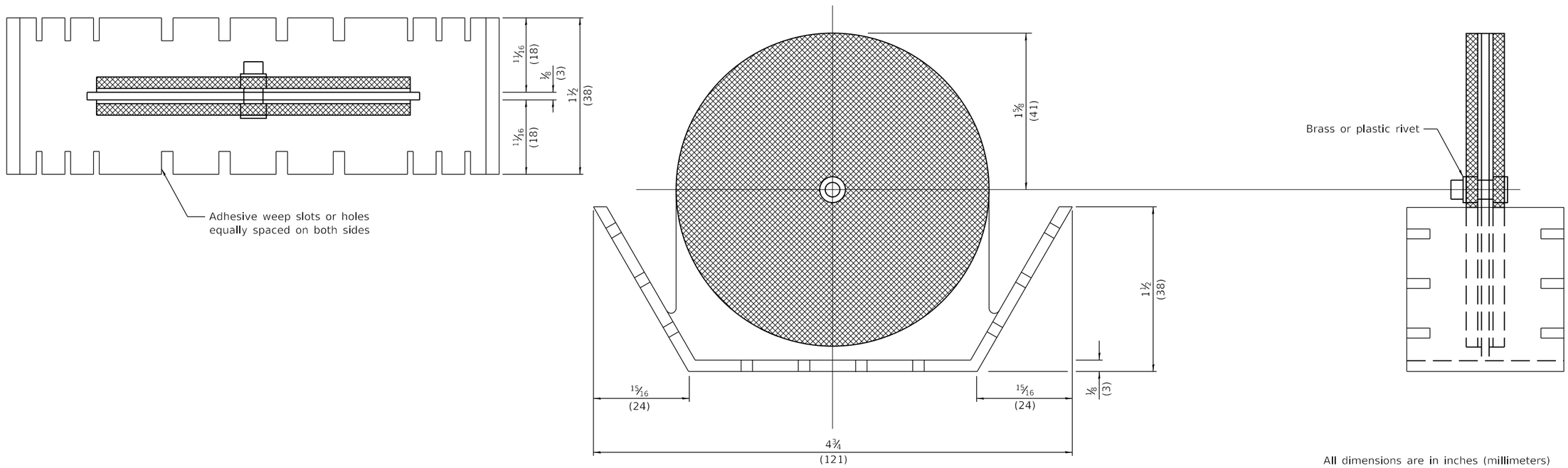


**REFLECTOR TYPE B**

(bidirectional shown)

All dimensions are in inches (millimeters) unless otherwise shown.

Illinois Department of Transportation

PASSED January 1, 2020

ENGINEER OF OPERATIONS

APPROVED January 1, 2020

ENGINEER OF DESIGN AND ENVIRONMENT

ISSUED 1-1-2000

| DATE | REVISIONS |
|---|---|
| 1-1-20 | Revised from F-shape to constant |
| | slope parapet, revised note 3 on |
| | sht. 3, and fixed typo. |
| 4-1-16 | Added reflector spacing |
| | detail. Moved TERMINAL |
| | MARKER to std. 725001. |

# GUARDRAIL AND BARRIER WALL REFLECTOR MOUNTING DETAILS

(Sheet 1 of 3)

## STANDARD 782006-01

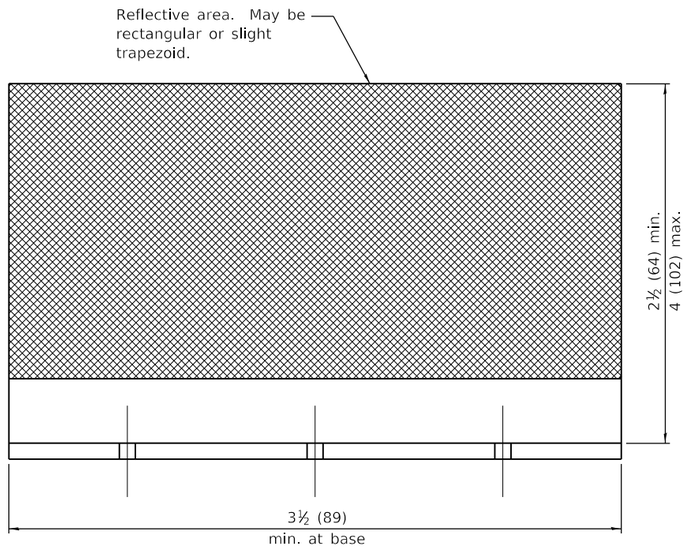


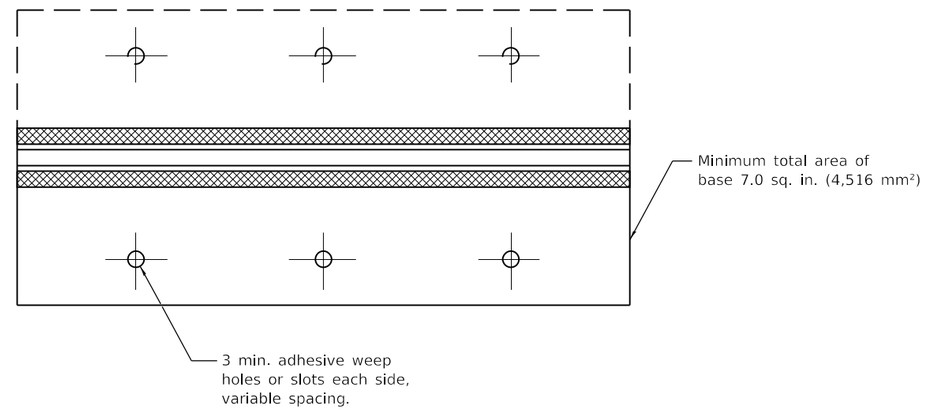


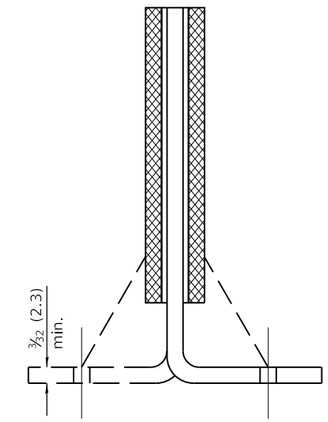


Cross section may be "T" or "L" shaped and may have side supports at ends.

**REFLECTOR TYPE C**

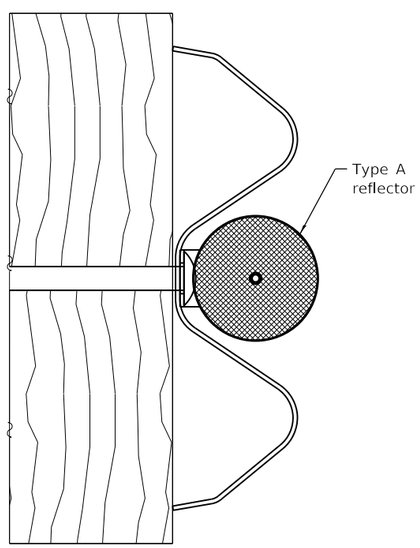


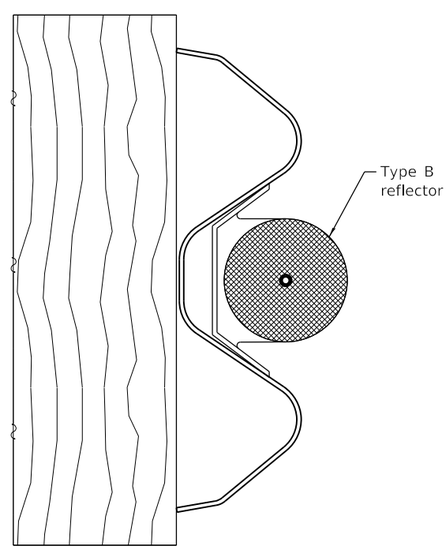


**TYPICAL MOUNTING DETAIL FOR GUARDRAIL REFLECTOR**

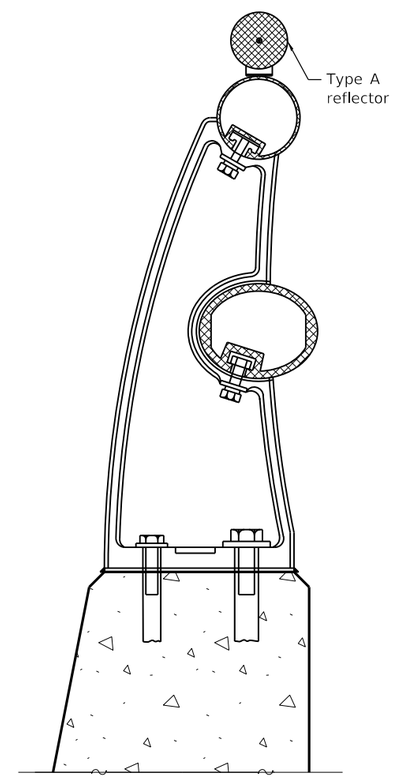


**TYPICAL MOUNTING DETAIL FOR BRIDGE RAIL REFLECTOR**

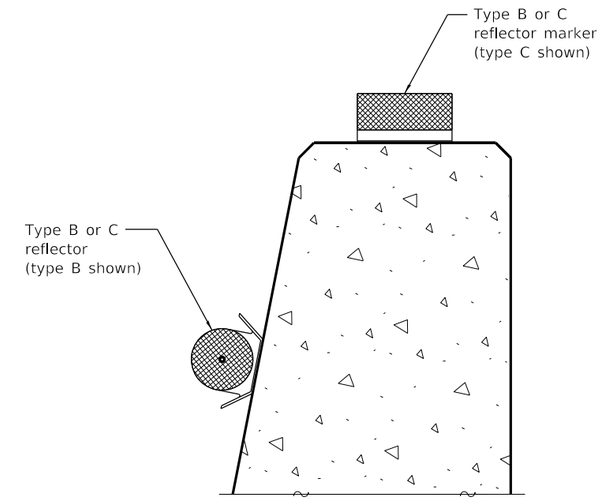


**TYPICAL MOUNTING DETAIL FOR BARRIER WALL REFLECTOR**

Illinois Department of Transportation

PASSED January 1, 2020
ENGINEER OF OPERATIONS

APPROVED January 1, 2020
ENGINEER OF DESIGN AND ENVIRONMENT

ISSUED 1-1-2000

# GUARDRAIL AND BARRIER WALL REFLECTOR MOUNTING DETAILS

(Sheet 2 of 3)

**STANDARD 782006-01**

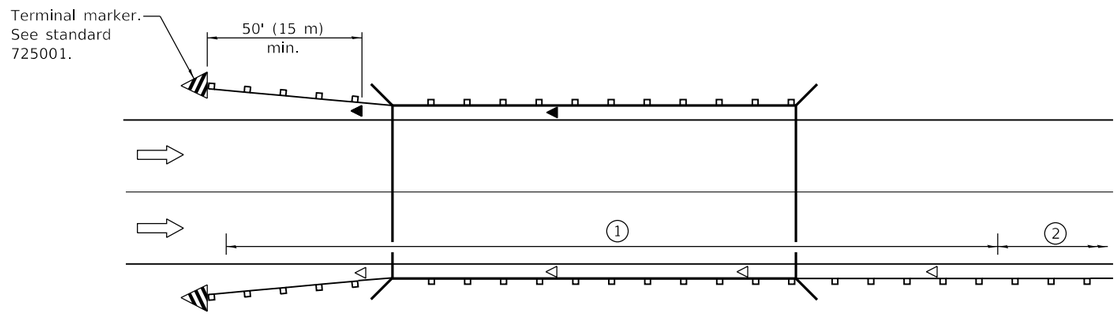


1 Spacing 80 ft. (24 m) max. for first 400 ft. (122 m) or curve spacing shown in Standard 635001, whichever is less (min. 4 reflectors regardless of length).

2 After 400 ft. (122 m), transition to normal delineator spacing shown in Standard 635001, and continue as required.

ONE-WAY TRAFFIC

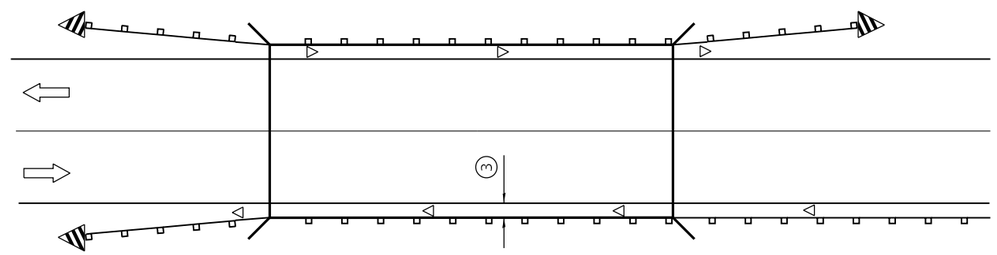


3 Where the shoulder width is reduced to less than 24 (610), use bidirectional crystal/crystal in lieu of monodirectional crystal.

◁ Monodirectional crystal

◀ Monodirectional amber

TWO-WAY TRAFFIC

## GUARDRAIL / BARRIER WALL REFLECTOR PLACEMENT DETAIL

Illinois Department of Transportation

PASSED January 1, 2020
ENGINEER OF OPERATIONS

APPROVED January 1, 2020
ENGINEER OF DESIGN AND ENVIRONMENT

ISSUED 1-1-2000

# GUARDRAIL AND BARRIER WALL REFLECTOR MOUNTING DETAILS

(Sheet 3 of 3)

STANDARD 782006-01