Illinois Highway Information System

Structure Information and Procedure Manual

State of Illinois
Illinois Department of Transportation

Illinois Department of Transportation

Printed by authority of the State of Illinois, 0553-16, 05/16

Structure Information & Procedure Manual

Prepared by:

Office of Programming

Agency:

Illinois Department of Transportation

Springfield Illinois

November 1, 2018

Hard Copies Uncontrolled

Hard Copies Uncontrolled

Illinois Highway Information System

Structure Information and Procedure Manual

July 1, 2016

Table of Contents

Page

Table of Contents i

Revisions ii

Preface iv

Introduction v

Definition of Terms xi

Data Item List by Item Name xii

Data Item List by Item Number xviii

Using the ISIS Manual Items xxiv

Data Item Descriptions and Purpose of Items ..... Item Number – Sheet Number

Appendix A - Municipality List A-1

Appendix B - Township/Road District List B-1

Appendix C - Clarification of Data Items C-1

Hard Copies Uncontrolled

Hard Copies Uncontrolled

Revisions

Date	Item #	Item Name	Action
11/1/2018	N/A	Introduction	Update Description
11/1/2018	5B	Inventory Route Kind	Update Title Block
11/1/2018	5C	Inventory Route Designation	Update Title Block
11/1/2018	5D	Inventory Route Number	Update Title Block
11/1/2018	25	Urban Area	Update Code Description
11/1/2018	34A	Skew Angle	Update Item Description
11/1/2018	41	Bridge Status	Update Item Footnote
11/1/2018	42A/B	Type of Service On/Under	Update Code Description
11/1/2018	43A	Main Structure Material	Update Code Description
11/1/2018	51	Total Bridge Roadway Width On	Update Item Description
11/1/2018	58	Deck Condition (1 of 5)	Update Title Block
11/1/2018	58	Deck Condition (2 of 5)	Update Code Description
11/1/2018	59	Superstructure Condition (1 of 9)	Update Title Block
11/1/2018	59	Superstructure Condition (3 of 9)	Update Code Description
11/1/2018	59	Superstructure Condition (4 of 9)	Update Code Description
11/1/2018	59	Superstructure Condition (5 of 9)	Update Code Description
11/1/2018	60A/B	Substructure Material	Update Item Description
11/1/2018	62E	Structure Fill Depth	Update Item Description
11/1/2018	70	Bridge Posting Level (1 of 2)	Update Item Description
11/1/2018	70	Bridge Posting Level (2 of 2)	Update Item Footnote
11/1/2018	70A2	Posted Single Unit Weight Limit	Update Code Description
11/1/2018	90B	Routine Inspection Remarks	Update Item Description
11/1/2018	94	Bridge Improvement Cost	Update Item Description
11/1/2018	100	Special Systems	Update Code Description
11/1/2018	107	Deck Structure Type	Update Item Footnote
11/1/2018	108D	Total Deck Thickness	Update Item Description
11/1/2018	113	Scour Critical Evaluation (1 of 3)	Update Code Description
11/1/2018	133	Structurally Deficient	Update Item Description
11/1/2018	135	Structure Square Footage	New Item
2/1/2017	32	Approach Roadway Width	Update Item Description
2/1/2017	51	Total Bridge Roadway Width On	Update Item Description
2/1/2017	58	Deck Condition	Update Code Description
2/1/2017	60	Substructure Condition	Update Code Description
2/1/2017	60A/B	Substructure Material	Update Code Description
2/1/2017	70	Bridge Posting Level	Update Code Description
7/1/2016	COMPLETE MANUAL UPGRADE		
7/1/2011	31A	Structural Steel Weight	Update Screen Location
7/1/2011	34	Skew Direction	Update Screen Location
7/1/2011	47	Maximum Single Roadway Width	Update Item Description
7/1/2011	58	Deck Condition	Update Code Description
7/1/2011	59B	Last Paint Type	Update Code Description
7/1/2011	59B	Last Paint Type	Update Code Description
7/1/2011	60	Substructure Condition	Update Item Description
7/1/2011	60	Substructure Condition	Update Code Description

Hard Copies Uncontrolled

Revisions

Date	Item #	Item Name	Action
7/1/2011	60	Substructure Condition	Update Code Description
7/1/2011	60	Substructure Condition	Update Code Description
7/1/2011	62D	Culvert Opening Area (Sq. Ft.)	Update Code Description
7/1/2011	63	Method Used To Determine Opr. Rating	Update Code Description
7/1/2011	65	Method Used To Determine Inv. Rating	Update Code Description
7/1/2011	71	Waterway Adequacy Appraisal	Update Code Description
7/1/2011	92A	Fracture Critical Inspection Interval	Update Item Description
7/1/2011	93A	Fracture Critical Inspection Date	Update Item Description
7/1/2011	100	Special Systems	Update Code Description
7/1/2011	108A	Type Of Wearing Surface	Update Code Description
7/1/2011	131	HBP Eligibility	Update Item Footnote
1/1/2009	131	Name Index	Update Item Name
1/1/2009	131	Numerical Index	Update Item Name
1/1/2009	6	Feature Crossed	Update Item Description
1/1/2009	6A	Designated Critical Facility List	Remove Manual Page
1/1/2009	58	Deck Condition	Update Item Description
1/1/2009	58	Deck Condition	Update Code Description
1/1/2009	59	Superstructure Condition	Update Item Description
1/1/2009	59	Superstructure Condition	Update Code Description
1/1/2009	92A1	Fracture Critical Bridge Type	Update Code Description
1/1/2009	92C1	Special Feature Type	Update Code Description
1/1/2009	93A1	Fracture Critical Appraisal Rating	Update Code Description
1/1/2009	93A6	Fracture Critical Inspection Method	New Item
1/1/2009	93B5	Underwater Inspection Category	Update Code Description
1/1/2009	93B8	Underwater Inspected Substr. Units	New Item
1/1/2009	93C4	Special Feature Inspection Remarks	Update Code Description
1/1/2009	123	Microfilm Done By	Update Item Name
1/1/2009	124	Microfilm Type	Update Item Name
1/1/2009	125	Microfilm Remarks	Update Item Name
1/1/2009	126	Microfilm Beginning Frame Number	Update Item Name
1/1/2009	127	Microfilm Ending Frame Number	Update Item Name
1/1/2009	133	Structurally Deficient	New Item
1/1/2009	134	Functionally Obsolete	New Item
1/1/2009	135-199	Not Used; Reserved For IDOT	Update Item Number
1/1/2009	Form	Fracture Critical Inspection Form	Updated Form

Hard Copies Uncontrolled

PREFACE

The Illinois Department of Transportation has prepared this manual in cooperation with the U.S. Department of Transportation, Federal Highway Administration (FHWA). It provides for the collection and management of all information needed to satisfy the requirements of the National Bridge Inspection Standards (NBIS) as outlined in the Federal Highway Administration's Recording and Coding Guide for the Structure Inventory and Appraisal of the Nation's Bridges, December 1995. As a word of caution to holders of the FHWA guide: the format, scheme and coding directions differ considerably from this manual. The FHWA guide should be used only as a reference. The Illinois Structure Information and Procedures manual (a.k.a. SIP or ISIS manual) should be used exclusively for entering and interpreting codes to represent Illinois' structure data. For reports generated to meet FHWA requirements (such as the federal Structure Inventory and Appraisal (SI&A) sheet), interpretation should be made from codes in the FHWA guide.

The SIP manual has been developed through a cooperative effort within the Department between the Division of Highways and the Office of Planning and Programming. IDOT and its Divisions and Offices are committed to maintaining the structure information system at a high level. This commitment is not only to satisfy NBIS requirements, but also to provide an excellent working tool in managing the bridges and other structures as they relate to the overall transportation system in Illinois. In the interest of the traveling public's safety and convenience, this commitment remains a high priority for the Department.

** Note: The FHWA Guide can be found at the following Internet website: http://www.fhwa.dot.gov/bridge/mtguide.pdf

Hard Copies Uncontrolled

Hard Copies Uncontrolled

INTRODUCTION

The SIP manual can be downloaded from the IDOT web site: SIP Manual

A. PURPOSE

The purpose of this manual is to provide an instrument that will enable designated offices within the Illinois Department of Transportation and local highway agencies to monitor and manage the vast amount of structure data contained in the Illinois Structure Information System. The manual will allow interpretation of various reports and formatted data generated by the systems for users of such data in addition to interpretation of specific up-to-date items by viewing computer inquiry screens. A third group to whom the manual or parts of it could serve to be beneficial would be that group not familiar with the systems that use such data, such as the media. For them, an understanding of the depth and completeness, in addition to explanation of specific data, would be enhanced.

B. BACKGROUND

Highway inventory operations began during the winter of 1935-1936 with the inventory of rural roads in a federally sponsored Highway Planning Survey. State and county municipal sections were added shortly thereafter. A re-inventory program of selected counties was started in 1940 and resumed in the late 1940's after having been curtailed during the World War II years. This planning function continued relatively unchanged until the early 1970's. The State District Highway offices had full field inventory responsibility for both state and local highways. Local agencies participated only to the extent of making construction plan data, etc., available.

Included in the highway inventory process was an effort that inventoried and evaluated structures having a greater than 20 foot opening, face to face of abutments. For each structure, a Highway Structure Sheet was kept and updated during the re-inventory cycle or as certain revisions became known. Recorded on the structure sheet, in addition to inventory items, were a description of the bridge type, span lengths, width, clearances, material, load limits, and a cursory "good, fair or poor" condition evaluation for superstructure, substructure, surface, arches and culvert elements. The evaluations were often made by persons in the field, having limited or no structural background, during the inventory of the roadway. However, the structure sheet provided a fairly good record for each major structure serving public highways, roads and streets in the state and provided a base from which statistical data were prepared to satisfy federal requirements.

Hard Copies Uncontrolled

Today's structures reflect the technical advances in design, construction, and safety features that have evolved over the years. However, many structures serving today's highways and roads were built before or soon after the turn of the century. Because of the advancing age (in excess of 50 years) of these and many other structures, and in spite of the technological advances made over the years, the adequacy of the structure system as it relates to the overall highway network demands close scrutiny and continual attention.

Tragic occurrences of bridge failures raise public concern and cause public agencies and persons in the industry to consider the entire nationwide situation.

The collapse of the Silver Bridge at Point Pleasant, West Virginia in 1967 aroused public interest in the inspection and maintenance of bridges. The United States Congress added a section to the Federal Aid Highway Act of 1968 that required the Secretary of the U.S. Department of Transportation to establish national bridge inspection standards. As a result, the Federal Highway Administration (FHWA) developed requirements for a program of inventory and appraisal of the nation's bridges. This has become known as the National Bridge Inspection Program (NBIP).

The original Act pertained to only those structures on the Federal-Aid system, but on November 6, 1978, the President signed into law the Surface Transportation Assistance Act of 1978. The Highway Bridge Replacement and Rehabilitation portion of the law provides that by December 31, 1980, all public bridges not on the Federal-Aid system should also be inspected and inventoried in accordance with the National Bridge Inspection Standards (NBIS).

The NBIP in Illinois was developed as a cooperative effort. Several bureaus within the Illinois Department of Transportation (IDOT) worked together to establish inspection and reporting procedures. Realizing that bridges under the jurisdiction of IDOT constitute only part of the total number of bridges used by the public, local agency participation was solicited by the Bureau of Local Roads and Streets through the Association of County Highway Superintendents and the Municipal League. Recognizing the importance of the NBIP for public safety, the organizations urged their membership to voluntarily participate in the program. Thus, in 1971, the IDOT Bureaus of Design, Maintenance, Traffic, Construction, Local Roads and Streets, and Planning, and the County Highway Superintendents and City Engineers officially launched the NBIP in Illinois.

Realizing that much of the information required for the NBIP would be of value to many agencies in Illinois (including some not directly involved in the program), a centralized

Hard Copies Uncontrolled

information repository was established. This was made an integral part of the computerized Highway Record Data Bank (HRDB) maintained by the IDOT Office of Planning and Programming, Planning Services Section. Integrating NBIP data with the HRDB enabled a structure to be examined not only as a separate entity, but also as a vital part of an existing road network. This duality of function was equally important in terms of developing short-term projects and long-range plans. At the same time, the impetus provided by the NBIP served to elevate the status of the structure. It was no longer just part of a road, but a unit in itself that could be improved without reference to the roadway. This facilitated improvements to unsafe structures.

The National Bridge Inspection Program consists of two inseparable parts: (a) inventory; and (b) inspection and appraisal. The inventory is an accounting of what is there, where it is, and to whom it belongs. The inspection and appraisal measures how safe and useful it is. The two portions together provide an indicator of how well the structure is functioning to serve the public. The extensive data base provides a useful tool to identify problem areas and to quantify the degree of the problem. Measures can then be developed to rectify the problem areas.

Increasingly over the years, IDOT has recognized the need to restructure the existing structure computer system to better address developing needs. With the advent of more sophisticated computer capabilities, it seemed timely to redesign the structure file to enhance the update process and to include additional data items to meet the continually increasing needs of the data users. The goal was (and still is) to provide an information system to better serve the Department as well as the local agencies throughout the state.

C. COMPUTER SYSTEMS

The Illinois Structure Information System (ISIS) was developed to replace the structure file in the HRDB. It utilized "mainframe" computer equipment and consolidated several structure-related files, expanded the old system and provided more opportunities for expansion and flexibility. This system assigned update responsibility to various Central Bureaus (as well as all District offices) through a series of update screens accessed by computer terminals and PC's. Any update became effective immediately and was accessible for viewing on a set of inquiry screens. Reports could be requested from and generated by the computer system.

In the mid 1990's, IDOT developed a PC version of the ISIS database to be used for the viewing, querying, and report generation of structure information that is still in use today. Known as the "Structure Information and Management System" (SIMS), it provides users with a Microsoft Access database that is copied nightly from the ISIS database. Users can query

Hard Copies Uncontrolled

structure information (information is presented in the same format as the ISIS inquiry screens), generate standard reports, and create their own reports. All users of the SIMS database and its data must follow the following IDOT approved protocol:

> *Excerpt from SIMS User Guide Page 2, Revised 08/20/1998:*
> *"The data in SIMS is intended to be used for the preparation of internal documents and reports. Specific inquiries for information, from outside the department, should be referred to either the Office of Public Affairs or the Office of Planning and Programming. Official departmental response to data inquiries should be prepared by or reviewed by these offices."*

On July 3, 2012, the mainframe ISIS database was replaced with a new web browser database. While the “new” ISIS database includes all of the data fields from the mainframe ISIS database update screens, these data fields have been consolidated and reorganized into fewer data entry screens. These new data entry screens are organized in a directory tree fashion and they utilize dropdown data fields.

For State Jurisdiction structures only, an upload program is in place that sends inspection data to ISIS. This PC based upload program, BIS (Bridge Inspection Program), is available to all District Bridge Maintenance Engineers for use in entering State Jurisdiction bridge inspections in to ISIS.

D. STRUCTURE DATA BASE

The term "structure" is broad and in the context of this manual includes bridges, culverts, pedestrian overpasses, pipeline structures, tollway restaurant overheads and other structures that accommodate or limit the continuity of highways.

A bridge is generally defined as a structure carrying a roadway over a stream, railroad, another roadway or depression. A culvert is generally defined as a structure that carries a stream under the roadway.

The ISIS database contains data for all structures that meet or exceed the minimum length specified to be designated as a bridge for NBIS. There are also structures of lesser lengths recorded in the data base to satisfy various tracking needs.

The following definition is used by AASHTO, and is given in the NBIS:

Hard Copies Uncontrolled

A structure including supports erected over a depression or an obstruction, such as water, highway, or railway, and having a track or passageway for carrying traffic or other moving loads, and having an opening measured along the center of the roadway of more than twenty feet between undercopings* of abutments or spring lines of arches, or extreme ends of openings for multiple boxes; it may also include multiple pipes, where the clear distance between openings is less than half of the smaller contiguous opening.

** The undercoping of an abutment is the point where the bridge bearing seat intersects the front face (usually nearly vertical) of the abutment. Where there is a distinct abutment pile cap, it is the point of intersection on the abutment wall or piling with the cap.*

All structures involving a highway, and having an opening length as described above (greater than twenty feet) are required to be included regardless of the highway systems on which they are located. This measurement is recorded in Item 112 - AASHTO BRIDGE LENGTH. All other structures having an opening length of less than or equal to twenty feet and involving a highway, will be accepted into the system.

E. IDENTIFICATION BY STRUCTURE NUMBER

Each structure is identified by the 7-digit Structure Number composed of a 3-digit Structure County Number (Item 3) and a 4-digit structure sequence number (Item 8A). Once the Structure Number has been assigned, it is permanent and will not be changed even though a change in maintenance responsibility may occur. Data for the old number will be retained in a historical file. Similarly, a bridge constructed using any visible portion of the same substructure will keep its same number. A completely new bridge erected at the same location on the same or new alignment, that does not use any visible part of the old bridge will be assigned a new number. New structures are to be assigned numbers using the next available number by district scheme.

NOTE: THERE IS NO STATEWIDE SCHEME TO CATEGORIZE STRUCTURES BY NUMBER.

ASSIGNMENT OF STRUCTURE NUMBERS FOR STATE MAINTAINED STRUCTURES

The Structure Number will be assigned by the District Bureau of Program Development and entered into ISIS within 90 days of project initiation.

ASSIGNMENT OF STRUCTURE NUMBERS FOR LOCAL MAINTAINED STRUCTURES

Hard Copies Uncontrolled

The Structure Number is issued by the District Bureau of Program Development and assigned by the maintaining agency. For new bridges, the Structure Number is to be issued, assigned and entered into ISIS no later than submittal of preliminary Bridge Design; or Type, Size and Location (TS&L) plans for Central Office approval.

The Structure Number must be shown on the bridge plans, preferably in the title block of each structural sheet, as well as on the structure nameplate.

As coordinators for structure number reporting, the District Bureau of Program Development should continue its monitoring efforts to avoid duplicating a Structure Number, including any used prior to the establishment of ISIS in 1988. It should also maintain sufficient records to assure that the appropriate Structure Number is used for the first time record creation for the structure.

F. WHEN TO REPORT CHANGES

Inventory and inspection changes to existing structures, including proposed new structures, are required by IDOT to be entered into the data base within 90 days of occurrence for both state maintained structures and local agency maintained structures. When adding a new structure to the file, the following items are the minimum needed to make the addition:

Number	Description
3 & 8A	Structure Number
3B & 3B1	Maintenance County, Maintenance Township
21	Maintenance Responsibility
22A	Reporting Agency
42A&B	Type of Service On & Under

All other data items applicable to the structure must be entered into the data base within the time frame as previously discussed.

Hard Copies Uncontrolled

DEFINITION OF TERMS

For clarity, the definitions of some terms and abbreviations as used in the context of this manual are provided below:

Bridge - See Introduction - Section D - Structure Data Base.

History - Any data base item where all past values for that item are stored in the database.

Illinois Highway Information System (IHIS) - The master data base resulting from the combining of the individual IRIS and ISIS databases.

Illinois Roadway Information System (IRIS) - The computer system and data base which accommodates the entry and retrieval of pertinent information in relation to all highways open to public travel.

Illinois Structure Information System (ISIS) - The computer database which accommodates the entry and retrieval of inventory and inspection data for all structures open to public travel.

Inventory Route or Key Route - Both terms sometimes used interchangeably. Technically, the two descriptions pertain to the same section of highway. "Inventory Route" (also called Marked or Unmarked Route) refers to the highway identified in Items 5A-5E, and whose highway designation terminology can be most familiar to the travelling pubic. "Key Route" is defined in Items 1A-1H and is used by IDOT to uniquely identify roadway that typically can cross county and township borders, sometimes starting at one end of the state and continuing to the opposite end. Key route may be viewed as the most basic unit of identification for the Illinois highway system. Example: For an identified section of highway, there may be many Inventory Route designations assigned to the section, but only one key route designation.

Key Route data is recorded for the highway(s) on and under the structure. Inventory Route Data is computer generated from the Key Route information and stored in the ISIS database. The Illinois Structure Information System will accommodate the entry of an unlimited number of routes per structure. Individual data items located on Key Route computer screens are therefore recorded individually for each route.

Bridge Inspection System (BIS) - The PC based, ISIS upload application, that's used to enter State bridge inspection data in to ISIS.

National Bridge Inspection Program (NBIP) - The program developed by the Federal Highway Administration (FHWA) as a result of the Federal-Aid Highway Act of 1968, which requires the inventory and inspection of the nation's bridges.

National Bridge Inspection Standards (NBIS) - The federal regulations establishing requirements for inspection procedures, frequency of inspections, qualification of personnel, inspection reports and preparation and maintenance of a state bridge inventory.

Structure Information Management System (SIMS) – A version of the ISIS database information in a PC Microsoft Access database format. Information is copied nightly from the ISIS database to the SIMS Access database where users can view data and generate reports.

Hard Copies Uncontrolled

Hard Copies Uncontrolled

NAME INDEX

DATA ITEMS

Number	Name
29	AADT
30	AADT Year
112	AASHTO Bridge Length
90A	Agency Program Manager
70B1	Allowable Combination Type 3S-1 Weight Limit
70C1	Allowable Combination Type 3S-2 Weight Limit
70D1	Allowable One Truck At A Time
70A1	Allowable Single Unit Weight Limit
67-72	Appraisal Ratings - General
72	Approach Roadway Alignment
32	Approach Roadway Width
98A	Border Bridge Adjacent State
98B	Border Bridge Adjacent State % Responsibility
99	Border Bridge Adjacent Structure Number
94	Bridge Improvement Cost
33	Bridge Median Type
33A	Bridge Median Width
7A	Bridge Name
70	Bridge Posting Level
8A1	Bridge Remarks (General)
8D	Bridge Replaces Number
41	Bridge Status
41A	Bridge Status Date
41B	Bridge Status Remarks
27G	Built By Agency
19	Bypass Length
61	Channel Condition
58-62	Condition Ratings - General
27E	Construction Contract Number
27A-H	Construction Information (Composite - Item 27 thru 27H)
27H	Construction Remarks
27B	Construction Route Number
27C	Construction Section Number
27D	Construction Station Number
27	Construction Type Indicator
27A	Construction Year
90A3	Consultant Program Manager
62C	Culvert Cell Height
62B	Culvert Cell Width
62A	Culvert Cells (Count)
62	Culvert Condition
62E	Culvert Fill Depth

Hard Copies Uncontrolled

NAME INDEX

DATA ITEMS

Number	Name
62D	Culvert Opening Area
58	Deck Condition
68	Deck Geometry
108C	Deck Protection
107A	Deck Structure Thickness
107	Deck Structure Type
512	Deck Waterproofing Type
31	Design Load
6A	Designated Critical Facility
110	Designated Truck Route
2	District
109	Estimated Truck Percentage
7	Facility Carried
6	Feature Crossed
27F	Federal Aid Project Number
93A1	Fracture Critical Appraisal Rating
92A1	Fracture Critical Bridge Type
93A	Fracture Critical Inspection Date
92A	Fracture Critical Inspection Interval
93A6	Fracture Critical Inspection Method
93A2	Fracture Critical Inspection Remarks
93A4	Fracture Critical Inspection Temperature
93A5	Fracture Critical Inspector
92A3	Fracture Critical Number Of Members
92A2	Fracture Critical Number Of Spans
93A3	Fracture Critical Team Leader
26	Functional Classification
134	Functionally Obsolete
114	Future AADT
115	Future AADT Year
36E-F	Guardrail Type On
37	Historical Significance
47A-B	Horizontal Clearance
75A-B	Improvement (Type/Done By)
97	Improvement Cost Estimate Year
96	Improvement Total Project Cost
515	Inspection Route
3A	Inventory County
66B-B1	Inventory Rating
65	Inventory Rating Method
5A-E	Inventory Route (Composite - Item 5A thru 5E)
5C	Inventory Route Designation

Hard Copies Uncontrolled

NAME INDEX

DATA ITEMS

Number	Name
5E	Inventory Route Directional Suffix
5B	Inventory Route Kind
11	Inventory Route Milepoint
5D	Inventory Route Number
5A	Inventory Route Record Type
1A-G	Key Route (Composite - Item 1A thru 1G)
1F	Key Route Appurtenance Number
1D	Key Route Appurtenance Type
1B	Key Route Number
1E	Key Route Segment
1G	Key Route Station
1C	Key Route Suffix
1A	Key Route Type
59A	Last Paint Date
59B	Last Paint Type
66C	Last Rating Date
132	Last Update Date
16	Latitude
76	Length Of Improvement
48	Length Of Longest Span
116	Lift Bridge Minimum Navigational Vertical Clearance
12	Link Indicator
9	Location Description
17	Longitude
43A	Main Structure Material
43B	Main Structure Type
3B	Maintenance County
4A	Maintenance Municipality
21	Maintenance Responsibility
500-500A	Maintenance Team Section-Subsection Over
501-501A	Maintenance Team Section-Subsection Under
3B1	Maintenance Township
47	Maximum Single Roadway Width
126	Microfilm Beginning Frame Number
121	Microfilm Date & Time
123A-B	Microfilm Done By
127	Microfilm Ending Frame Number
122	Microfilm Number
125	Microfilm Remarks
124	Microfilm Type
56	Minimum Lateral Highway Underclearance (Left)
55B	Minimum Lateral Highway Underclearance (Right)

Hard Copies Uncontrolled

NAME INDEX

DATA ITEMS

Number	Name
55A	Minimum Lateral Underclearance Reference Feature
53A-B	Minimum Vertical Clearance On
54B1-B2	Minimum Vertical Highway Underclearance
54A	Minimum Vertical Underclearance Reference Feature
522	MMI Remarks
8B	Multi-Level Structure Number
4	Municipality
104	National Highway System
38	Navigation Control
40	Navigation Horizontal Clearance
39	Navigation Vertical Clearance
44A	Near/Far Approach Span Material
44B	Near/Far Approach Span Type
520	Number Of Impact Attenuators
28	Number Of Lanes
519	Number Of Navigational Lights
521	Number Of Pier Protection Cells
102	One Or Two Way Traffic
64B-B1	Operating Rating
63	Operating Rating Method
64D	Operating/Inventory Remarks
502	Over/Only Maintenance By
22	Owner
101	Parallel Structure Designation
111	Pier Navigation Protection
70B2	Posted Combination Type 3S-1 Weight Limit
70C2	Posted Combination Type 3S-2 Weight Limit
70D2	Posted One Truck At A Time
70A2	Posted Single Unit Weight Limit
8E	Proposed Bridge Number
36B-D	Railing Appraisal (Approach)
36A	Railing Appraisal (Bridge)
36A-D	Railing Appraisals (Composite Item 36A thru 36D)
8C	Railroad Crossing Numbers
55B1	Railroad Lateral Underclearance
54B3	Railroad Vertical Underclearance
106	Reconstruction Year
22A	Reporting Agency
95	Roadway Improvement Cost
90	Routine Inspection Date
91	Routine Inspection Interval
90B	Routine Inspection Remarks

Hard Copies Uncontrolled

NAME INDEX

DATA ITEMS

Number	Name
90A1	Routine Inspection Team Leader
90C	Routine Inspection Temperature
90A2	Routine Inspector
113C	Scour Critical Analysis By
113A	Scour Critical Analysis Date
113	Scour Critical Evaluation
113B	Scour Critical Evaluation Method
113D	Scour Critical Remarks
50A-B	Sidewalk Width On (Right/Left)
50C	Sidewalks Under Structure Indicator
34A	Skew Angle
34	Skew Direction
92C3	Special Inspection Close Date
93C1	Special Inspection Condition Status
93C	Special Inspection Date
92C6	Special Inspection Determination Date
92C4	Special Inspection Initiated By
92C7	Special Inspection Inspect By Date
93C2B	Special Inspection Inspector
92C	Special Inspection Interval
92C5	Special Inspection Remarks
93C4	Special Inspection Remarks
92C2	Special Inspection Start Date
93C2A	Special Inspection Team Leader
92C1	Special Inspection Type
100	Special Systems
1	State Code
131	STP-Bridge Eligibility
67	Structural Evaluation
31A	Structural Steel Weight
133	Structurally Deficient
3	Structure County
35	Structure Flared Indicator
49	Structure Length
64C	Structure Rated By (Agency)
8A	Structure Sequence Number
60	Substructure Condition
60A-B	Substructure Material
130	Sufficiency Rating
59	Superstructure Condition
103	Temporary Structure Designation
10A-B	Ten-Foot Vertical Clearance

Hard Copies Uncontrolled

NAME INDEX

DATA ITEMS

Number	Name
20	Toll Facility Indicator
51	Total Bridge Roadway Width On
108D	Total Deck Thickness
52	Total Deck Width
46	Total Number Of Approach Spans
45	Total Number Of Main Spans
3A1	Township/Road District (Inventory)
108B	Type Of Membrane
42A-B	Type Of Service On/Under
108A	Type Of Wearing Surface
69	Underclearance Appraisal
93B1	Underwater Appraisal Rating
93B	Underwater Inspection Date
92B	Underwater Inspection Interval
93B4	Underwater Inspection Method
93B2	Underwater Inspection Remarks
93B8	Underwater Inspection Substructure Units
93B6	Underwater Inspection Temperature
93B7	Underwater Inspector
93B3	Underwater Team Leader
25	Urban Area
59C	Utilities Attached
71	Waterway Adequacy Appraisal
108A-C	Wearing Surface / Protective System

Hard Copies Uncontrolled

NUMERICAL INDEX

DATA ITEMS

Number	Name
1	State Code
1A-G	Key Route (Composite - Item 1A thru 1G)
1A	Key Route Type
1B	Key Route Number
1C	Key Route Suffix
1D	Key Route Appurtenance Type
1E	Key Route Segment
1F	Key Route Appurtenance Number
1G	Key Route Station
2	District
3	Structure County
3A	Inventory County
3A1	Township/Road District (Inventory)
3B	Maintenance County
3B1	Maintenance Township
4	Municipality
4A	Maintenance Municipality
5A-E	Inventory Route (Composite - Item 5A thru 5E)
5A	Inventory Route Record Type
5B	Inventory Route Kind
5C	Inventory Route Designation
5D	Inventory Route Number
5E	Inventory Route Directional Suffix
6	Feature Crossed
6A	Designated Critical Facility
7	Facility Carried
7A	Bridge Name
8A	Structure Sequence Number
8A1	Bridge Remarks (General)
8B	Multi-Level Structure Number
8C	Railroad Crossing Numbers
8D	Bridge Replaces Number
8E	Proposed Bridge Number
9	Location Description
10A-B	Ten-Foot Vertical Clearance
11	Inventory Route Milepoint
12	Link Indicator
16	Latitude
17	Longitude
19	Bypass Length
20	Toll Facility Indicator
21	Maintenance Responsibility

Hard Copies Uncontrolled

NUMERICAL INDEX

DATA ITEMS

Number	Name
22	Owner
22A	Reporting Agency
25	Urban Area
26	Functional Classification
27A-H	Construction Information (Composite - Item 27 thru 27H)
27	Construction Type Indicator
27A	Construction Year
27B	Construction Route Number
27C	Construction Section Number
27D	Construction Station Number
27E	Construction Contract Number
27F	Federal Aid Project Number
27G	Built By Agency
27H	Construction Remarks
28	Number Of Lanes
29	AADT
30	AADT Year
31	Design Load
31A	Structural Steel Weight
32	Approach Roadway Width
33	Bridge Median Type
33A	Bridge Median Width
34	Skew Direction
34A	Skew Angle
35	Structure Flared Indicator
36A-D	Railing Appraisals (Composite Item 36A thru 36D)
36A	Railing Appraisal (Bridge)
36B-D	Railing Appraisal (Approach)
36E-F	Guardrail Type On
37	Historical Significance
38	Navigation Control
39	Navigation Vertical Clearance
40	Navigation Horizontal Clearance
41	Bridge Status
41A	Bridge Status Date
41B	Bridge Status Remarks
42A-B	Type Of Service On/Under
43A	Main Structure Material
43B	Main Structure Type
44A	Near/Far Approach Span Material
44B	Near/Far Approach Span Type
45	Total Number Of Main Spans

Hard Copies Uncontrolled

NUMERICAL INDEX

DATA ITEMS

Number	Name
46	Total Number Of Approach Spans
47	Maximum Single Roadway Width
47A-B	Horizontal Clearance
48	Length Of Longest Span
49	Structure Length
50A-B	Sidewalk Width On (Right/Left)
50C	Sidewalks Under Structure Indicator
51	Total Bridge Roadway Width On
52	Total Deck Width
53A-B	Minimum Vertical Clearance On
54A	Minimum Vertical Underclearance Reference Feature
54B1-B2	Minimum Vertical Highway Underclearance
54B3	Railroad Vertical Underclearance
55A	Minimum Lateral Underclearance Reference Feature
55B	Minimum Lateral Highway Underclearance (Right)
55B1	Railroad Lateral Underclearance
56	Minimum Lateral Highway Underclearance (Left)
58-62	Condition Ratings - General
58	Deck Condition
59	Superstructure Condition
59A	Last Paint Date
59B	Last Paint Type
59C	Utilities Attached
60	Substructure Condition
60A-B	Substructure Material
61	Channel Condition
62	Culvert Condition
62A	Culvert Cells (Count)
62B	Culvert Cell Width
62C	Culvert Cell Height
62D	Culvert Opening Area
62E	Culvert Fill Depth
63	Operating Rating Method
64B-B1	Operating Rating
64C	Structure Rated By (Agency)
64D	Operating/Inventory Remarks
65	Inventory Rating Method
66B-B1	Inventory Rating
66C	Last Rating Date
67-72	Appraisal Ratings - General
67	Structural Evaluation
68	Deck Geometry

Hard Copies Uncontrolled

NUMERICAL INDEX

DATA ITEMS

Number	Name
69	Underclearance Appraisal
70	Bridge Posting Level
70A1	Allowable Single Unit Weight Limit
70A2	Posted Single Unit Weight Limit
70B1	Allowable Combination Type 3S-1 Weight Limit
70B2	Posted Combination Type 3S-1 Weight Limit
70C1	Allowable Combination Type 3S-2 Weight Limit
70C2	Posted Combination Type 3S-2 Weight Limit
70D1	Allowable One Truck At A Time
70D2	Posted One Truck At A Time
71	Waterway Adequacy Appraisal
72	Approach Roadway Alignment
75A-B	Improvement (Type/Done By)
76	Length Of Improvement
90	Routine Inspection Date
90A	Agency Program Manager
90A1	Routine Inspection Team Leader
90A2	Routine Inspector
90A3	Consultant Program Manager
90B	Routine Inspection Remarks
90C	Routine Inspection Temperature
91	Routine Inspection Interval
92A	Fracture Critical Inspection Interval
92A1	Fracture Critical Bridge Type
92A2	Fracture Critical Number Of Spans
92A3	Fracture Critical Number Of Members
92B	Underwater Inspection Interval
92C	Special Inspection Interval
92C1	Special Inspection Type
92C2	Special Inspection Start Date
92C3	Special Inspection Close Date
92C4	Special Inspection Initiated By
92C5	Special Inspection Remarks
92C6	Special Inspection Determination Date
92C7	Special Inspection Inspect By Date
93A	Fracture Critical Inspection Date
93A1	Fracture Critical Appraisal Rating
93A2	Fracture Critical Inspection Remarks
93A3	Fracture Critical Team Leader
93A4	Fracture Critical Inspection Temperature
93A5	Fracture Critical Inspector
93A6	Fracture Critical Inspection Method

Hard Copies Uncontrolled

NUMERICAL INDEX

DATA ITEMS

Number	Name
93B	Underwater Inspection Date
93B1	Underwater Appraisal Rating
93B2	Underwater Inspection Remarks
93B3	Underwater Team Leader
93B4	Underwater Inspection Method
93B6	Underwater Inspection Temperature
93B7	Underwater Inspector
93B8	Underwater Inspection Substructure Units
93C	Special Inspection Date
93C1	Special Inspection Condition Status
93C2A	Special Inspection Team Leader
93C2B	Special Inspection Inspector
93C4	Special Inspection Remarks
94	Bridge Improvement Cost
95	Roadway Improvement Cost
96	Improvement Total Project Cost
97	Improvement Cost Estimate Year
98A	Border Bridge Adjacent State
98B	Border Bridge Adjacent State % Responsibility
99	Border Bridge Adjacent Structure Number
100	Special Systems
101	Parallel Structure Designation
102	One Or Two Way Traffic
103	Temporary Structure Designation
104	National Highway System
106	Reconstruction Year
107	Deck Structure Type
107A	Deck Structure Thickness
108A-C	Wearing Surface / Protective System
108A	Type Of Wearing Surface
108B	Type Of Membrane
108C	Deck Protection
108D	Total Deck Thickness
109	Estimated Truck Percentage
110	Designated Truck Route
111	Pier Navigation Protection
112	AASHTO Bridge Length
113	Scour Critical Evaluation
113A	Scour Critical Analysis Date
113B	Scour Critical Evaluation Method
113C	Scour Critical Analysis By
113D	Scour Critical Remarks

Hard Copies Uncontrolled

NUMERICAL INDEX

DATA ITEMS

Number	Name
114	Future AADT
115	Future AADT Year
116	Lift Bridge Minimum Navigational Vertical Clearance
121	Microfilm Date & Time
122	Microfilm Number
123A-B	Microfilm Done By
124	Microfilm Type
125	Microfilm Remarks
126	Microfilm Beginning Frame Number
127	Microfilm Ending Frame Number
130	Sufficiency Rating
131	STP-Bridge Eligibility
132	Last Update Date
133	Structurally Deficient
134	Functionally Obsolete
500-500A	Maintenance Team Section-Subsection Over
501-501A	Maintenance Team Section-Subsection Under
502	Over/Only Maintenance By
512	Deck Waterproofing Type
515	Inspection Route
519	Number Of Navigational Lights
520	Number Of Impact Attenuators
521	Number Of Pier Protection Cells
522	MMI Remarks

Hard Copies Uncontrolled

Effective Date: 1/1/2015	ILLINOIS HIGHWAY INFORMATION SYSTEM Structure Information and Procedure Manual			
NBIS Required: **(4)**	Item Name	**(1)**	Item No.	**(2)**
History Kept: **(3)**			Sheet	**(5)**
Structures	**(6)**			
Update Screen	**(7)**		SIMS Field Name	
SIMS Table(s)	**(8)**		**(9)**	

ITEM DESCRIPTION

(10)

CODING INSTRUCTIONS

(11)

Figure: Data Item Description Page

Hard Copies Uncontrolled

SIP MANUAL PAGE – DEFINITIONS

(1)	**Item Name**	Data item name that is displayed on the ISIS database update screens.
(2)	**Item Number**	Data item number that is displayed on the ISIS database update screens and corresponds with the Item Name.
(3)	**History Kept**	Indicates if historical data is available in the ISIS database. Example: Routine Inspections
(4)	**NBIS Required**	Indicates if the data item is required as outlined in the FHWA's "The Recording and Coding Guide for the Structure Inventory and Appraisal of the Nation's Bridges".
(5)	**Sheet**	Page number within each Item Name/Number.
(6)	**Structures**	Indicates which structures the data item pertains to.
(7)	**Update Screen**	Update screen name in the ISIS database.
(8)	**SIMS Table(s)**	Table(s) where the data item resides in the SIMS Microsoft Access database.
(9)	**SIMS Field Name**	Field name of the data item in the SIMS database table(s).
(10)	**Item Description**	A description and purpose of the data item is provided here.
(11)	**Coding Instructions**	This area lists the codes to be used and gives instructions for entering the data item on the ISIS Update Screens.

Hard Copies Uncontrolled

Effective Date: 7/1/2016	ILLINOIS HIGHWAY INFORMATION SYSTEM Structure Information and Procedure Manual			
NBIS Required: Yes	Item Name	**STATE CODE**	Item No.	**1**
History Kept: No			Sheet	1 of 1
Structures	NBI Only			
Update Screen	COMPUTER GENERATED			
SIMS Table(s)	N/A			

ITEM DESCRIPTION

This item is a three-digit code used to identify the State and FHWA region in which a bridge is located. The first 2 digits are the Federal Information Processing Standards (FIPS) code for states and the third digit is the code for FHWA region.

CODING INSTRUCTIONS

Do Not Enter

Code	State	Code	State
014	Alabama	308	Montana
020	Alaska	317	Nebraska
049	Arizona	329	Nevada
056	Arkansas	331	New Hampshire
069	California	342	New Jersey
088	Colorado	356	New Mexico
091	Connecticut	362	New York
103	Delaware	374	North Carolina
113	District of Columbia	388	North Dakota
124	Florida	395	Ohio
134	Georgia	406	Oklahoma
159	Hawaii	410	Oregon
160	Idaho	423	Pennsylvania
175	Illinois	441	Rhode Island
185	Indiana	454	South Carolina
197	Iowa	468	South Dakota
207	Kansas	474	Tennessee
214	Kentucky	486	Texas
226	Louisiana	498	Utah
231	Maine	501	Vermont
243	Maryland	513	Virginia
251	Massachusetts	530	Washington
265	Michigan	543	West Virginia
275	Minnesota	555	Wisconsin
284	Mississippi	568	Wyoming
297	Missouri	721	Puerto Rico

ITEM DESCRIPTION

The Key Route is made up of eight data items that require twenty digits to report:

Data Item	Description	Length
1A	Type	1 digit
1B	Number	4 digits
1C	Suffix	1 digit
1D	Appurtenance Type	1 digit
1E	Segment	2 digits
1F	Appurtenance Number	5 digits
1G	Station	5 digits

All of the data items located on the ISIS Key Route screens are route orientated and should be recorded for each of the Key Routes on or under the structure.

ISIS can accommodate information for all Key Routes either on or under a structure. Therefore, the information listed above should be reported for all Key Routes according to the instructions for the individual items.

CODING INSTRUCTIONS

Reference the individual Data Item Description pages for a detailed discussion of each item.

Additional information may be found in the Illinois Highway Information System - Roadway Information and Procedure Manual (IRIS) concerning Key Route Identification.

ITEM DESCRIPTION

This item indicates the type of route(s) that will be identified by number(s) in Item Key Route Number (Item 1B). The Key Route(s) are entered for the highway(s) carried by the structure (Key Route On) and for the highway(s) crossed over by the structure (Key Route Under). This designation must be compatible with the Key Route information in the roadway file (IRIS).

CODING INSTRUCTIONS

A one-digit field.

The hierarchy of routes is in the order listed below:

Code	Key Route Type
1	Federal-aid Interstate
2	Federal-aid Primary
3	Federal-aid Secondary
9	Federal-aid Urban
4	State Bond Issue
5	County Highway
6	House or Senate Bill
8	Other Road - Including Toll Road
7	Township or Road District Road
0	Municipal Street

If either "on" or "under" is not applicable, leave blank.

NOTE: Enter the code(s) for all Key Routes on / under the structure - not just the one of most importance. The ISIS database will accept an unlimited number of routes

Effective Date: 7/1/2016	ILLINOIS HIGHWAY INFORMATION SYSTEM Structure Information and Procedure Manual			
NBIS Required: No	Item Name	**KEY ROUTE NUMBER**	Item No.	**1B**
History Kept: No			Sheet	1 of 1
Structures	Highway On/Under			
Update Screen	Key Routes		SIMS Field Name	
SIMS Table(s)	SIMD003/SIMD004 & ISISSummaryStateandLocal		KRNbrOn/KRNbrUn	

ITEM DESCRIPTION

This item indicates the Key Route Number of each respective Key Route Type reported in Key Route Type (Item 1A). The Key Route is entered for the highway(s) carried by the structure (Key Route On) and for the highway(s) crossed over by the structure (Key Route Under). This designation must be compatible with the Key Route information in the Illinois Roadway Information System (IRIS) database.

CODING INSTRUCTIONS

A four-digit field, following the one-digit Key Route Type (Item 1A).

Enter the appropriate route number, filling leading spaces with zeros.

Examples:

Key Route	Enter
FAI 55	0055
FAP 4	0004
TR 3	0003
CH 23	0023
Municipal Street #7130	7130

NOTE: Enter the code(s) for all Key Routes on / under the structure - not just the one of most importance. The ISIS database will accept an unlimited number of routes

ITEM DESCRIPTION

This item identifies the letter suffix that is sometimes used in conjunction with the route number when additional route identification is required.

CODING INSTRUCTIONS

A one-digit field following the Key Route Number (Item 1B).

Enter the appropriate alphabetic code (A-Z).

Leave blank if there is no alphabetic suffix.

Examples:

Route Number	Enter
County Highway 23A	A
County Highway 23	(blank)
FAP 6A	A

NOTE: Enter the code(s) for all Key Routes on / under the structure - not just the one of most importance. The ISIS database will accept an unlimited number of routes

ITEM DESCRIPTION

This item identifies each Key Route as the main route or an appurtenance thereof.

CODING INSTRUCTIONS

A one-digit field.

Enter the appropriate code for the designation type listed below.

Examples:

Code	Type
0	Mainline
1	Alternate Route
2	Spur
3	Wye
4	Ramp
5	Frontage Road
6	Temporary Connection
7	Collector-Distributor

NOTE: Enter the code(s) for all Key Routes on / under the structure - not just the one of most importance. The ISIS database will accept an unlimited number of routes

CODING INSTRUCTIONS

Appurtenance Type	Description
Mainline	The principal (through) highway carrying traffic in the direction of inventory of the Key Route.
Alternate	The principal (through) highway, separated from the mainline by land dedicated to non-highway use, for a Key Route carrying traffic in the direction opposing the mainline traffic.
Spur	A section of highway, having a direct connection to a Key Route, constructed as an extension to connect to another Key Route or as part of the original Key Route that was left in place after a realignment.
Wye	A short (generally between 0.04 and 0.15 miles) separate section of highway which provides for a turning movement at an intersection.
Ramp	A highway designed to provide access from one route to another within an interchange. Ramps are assigned to the most important (using the hierarchy for Key Route Type) Key Route. If two Key Routes of the same type intersect, use the one with the lowest Key Route Number.
Frontage Road	A roadway appurtenant to a main highway that serves as a means of indirect access to the main highway from adjacent property where right of direct access to the main highway has been extinguished. In addition, intersecting roads or streets relocated as a result of the improvement of the main highway will also be classified as frontage roads when they are: (1) Located outside the right-of-way limits of the main highway and their principal function is that of providing property adjacent to the main highway with indirect access to such highway. (2) Located within the right-of-way limits of the main highway, regardless of whether or not service is provided for adjacent property.

CODING INSTRUCTIONS

Appurtenance Type	Description
Temporary Connector	A highway provided during construction for routing of traffic from one roadway to another. Once construction is complete the temporary connector designation is removed.
Collector-Distributor	An auxiliary roadway, separated laterally but generally parallel to the main highway, which serves to collect and distribute traffic from several access connections between selected points of ingress and egress from the main highway.

ITEM DESCRIPTION

This item indicates, for Cook County only, the township in which the township road (Key Route Type = 7) is located.

CODING INSTRUCTIONS

A two-digit field.

Enter the appropriate Cook County Township code as specified for Item Township/Road District (Item 3A1).

Township/Road District codes are identified in Appendix B.

Leave blank if not a Cook County Township Road.

NOTE: Enter the code(s) for all Key Routes on / under the structure - not just the one of most importance. The ISIS database will accept an unlimited number of routes

ITEM DESCRIPTION

This item identifies an appurtenance by its relationship to the Main Route. The Route Station for the main through highway where the appurtenance initially intersects becomes the appurtenance number. In the case where an alternate route intersects the main route more than once, the main route station at the first point of intersection becomes the appurtenance number.

CODING INSTRUCTIONS

A five-digit number, right justified, representing the main route station in thousandths (thousandth position is always zero).

Enter the station in the appropriate spaces, filling any unused spaces with zeros.

Leave this item blank if the Key Route is identified as a main route – not an appurtenance.

Examples:

Main Route Station	Enter
5.16	05160
23.95	23950

Note: If Key Route Appurtenance Type (Item 1D) is a zero, Key Route Appurtenance Number is always all zeros.

NOTE: Enter the code(s) for all Key Routes on / under the structure - not just the one of most importance. The ISIS database will accept an unlimited number of routes

ITEM DESCRIPTION

This item corresponds to the log mile along the key route(s) at which the structure begins in the direction of increasing mileage.

For the highway(s) ON, record the route station representing the beginning of the structure. For parallel structures with identical stationing, offset either one by 0.01 of a mile.

For the highway(s) UNDER, record the route station where the centerline of the structure intersects the centerline of the highway(s) under.

CODING INSTRUCTIONS

A five-digit number, with two positions to the right of the decimal.

Enter the value to the hundredths of a mile, filling leading spaces with zeros.

Examples:

Stationing	Enter
12.34 Miles	012.34
1.84 Miles	001.84
100.99 Miles	100.99

NOTE: Enter the code(s) for all Key Routes on / under the structure - not just the one of most importance. The ISIS database will accept an unlimited number of routes

ITEM DESCRIPTION

This item is the number of the State Highway District which has the maintenance responsibility for the structure, as identified by the Maintenance County (Item 3B).

CODING INSTRUCTIONS

DO NOT ENTER

This item is computer generated from Item 3B.

District Office	District
Schaumburg	1
Dixon	2
Ottawa	3
Peoria	4
Paris	5
Springfield	6
Effingham	7
Collinsville	8
Carbondale	9

ITEM DESCRIPTION

This item indicates the county in which the structure is physically located. Structures located on a county line can be assigned to either county.

The code number constitutes the first three digits of the 7-digit structure identification number. All history is kept by this number and it appears at the top of all data screens.

This item cannot be updated after it has been added to the file. See Item 3A for changes in Inventory County or Item 3B for changes in Maintenance County.

CODING INSTRUCTIONS

A three-digit field.

Enter the appropriate code in the first three positions of the seven-digit structure number.

(See County Codes on next page)

County	Dist-Code	County	Dist-Code	County	Dist-Code
Adams	6-001	Hardin	9-035	Morgan	6-069
Alexander	9-002	Henderson	4-036	Moultrie	7-070
Bond	8-003	Henry	2-037	Ogle	2-071
Boone	2-004	Iroquois	3-038	Peoria	4-072
Brown	6-005	Jackson	9-039	Perry	9-073
Bureau	3-006	Jasper	7-040	Piatt	5-074
Calhoun	8-007	Jefferson	9-041	Pike	6-075
Carroll	2-008	Jersey	8-042	Pope	9-076
Cass	6-009	JoDaviess	2-043	Pulaski	9-077
Champaign	5-010	Johnson	9-044	Putnam	4-078
Christian	6-011	Kane	1-045	Randolph	8-079
Clark	7-012	Kankakee	3-046	Richland	7-080
Clay	7-013	Kendall	3-047	Rock Island	2-081
Clinton	8-014	Knox	4-048	St. Clair	8-082
Coles	7-015	Lake	1-049	Saline	9-083
Cook	1-016	LaSalle	3-050	Sangamon	6-084
Crawford	7-017	Lawrence	7-051	Schuyler	6-085
Cumberland	7-018	Lee	2-052	Scott	6-086
DeKalb	3-019	Livingston	3-053	Shelby	7-087
DeWitt	5-020	Logan	6-054	Stark	4-088
Douglas	5-021	McDonough	4-055	Stephenson	2-089
DuPage	1-022	McHenry	1-056	Tazewell	4-090
Edgar	5-023	McLean	5-057	Union	9-091
Edwards	7-024	Macon	7-058	Vermilion	5-092
Effingham	7-025	Macoupin	6-059	Wabash	7-093
Fayette	7-026	Madison	8-060	Warren	4-094
Ford	3-027	Marion	8-061	Washington	8-095
Franklin	9-028	Marshall	4-062	Wayne	7-096
Fulton	4-029	Mason	6-063	White	9-097
Gallatin	9-030	Massac	9-064	Whiteside	2-098
Greene	8-031	Menard	6-065	Will	1-099
Grundy	3-032	Mercer	4-066	Williamson	9-100
Hamilton	9-033	Monroe	8-067	Winnebago	2-101
Hancock	6-034	Montgomery	6-068	Woodford	4-102

Hard Copies Uncontrolled

District 1

Cook	016
DuPage	022
Kane	045
Lake	049
McHenry	056
Will	099

District 2

Boone	004
Carroll	008
Henry	037
JoDaviess	043
Lee	052
Ogle	071
Rock Island	081
Stephenson	089
Whiteside	098
Winnebago	101

District 3

Bureau	006
DeKalb	019
Ford	027
Grundy	032
Iroquois	038
Kankakee	046
Kendall	047
LaSalle	050
Livingston	053

District 4

Fulton	029
Henderson	036
Knox	048
McDonough	055
Marshall	062
Mercer	066
Peoria	072
Putnam	078
Stark	088
Tazewell	090
Warren	094
Woodford	102

District 5

Champaign	010
DeWitt	020
Douglas	021
Edgar	023
McLean	057
Piatt	074
Vermilion	092

District 6

Adams	001
Brown	005
Cass	009
Christian	011
Hancock	034
Logan	054
Macoupin	059
Mason	063
Menard	065
Montgomery	068
Morgan	069
Pike	075
Sangamon	084
Schuyler	085
Scott	086

District 7

Clark	012
Clay	013
Coles	015
Crawford	017
Cumberland	018
Edwards	024
Effingham	025
Fayette	026
Jasper	040
Lawrence	051
Macon	058
Moultrie	070
Richland	080
Shelby	087
Wabash	093
Wayne	096

District 8

Bond	003
Calhoun	007
Clinton	014
Greene	031
Jersey	042
Madison	060
Marion	061
Monroe	067
Randolph	079
St. Clair	082
Washington	095

District 9

Alexander	002
Franklin	028
Gallatin	030
Hamilton	033
Hardin	035
Jackson	039
Jefferson	041
Johnson	044
Massac	064
Perry	073
Pope	076
Pulaski	077
Saline	083
Union	091
White	097
Williamson	100

Hard Copies Uncontrolled

Effective Date: 7/1/2016	ILLINOIS HIGHWAY INFORMATION SYSTEM Structure Information and Procedure Manual			
NBIS Required: No	Item Name	**INVENTORY COUNTY**	Item No.	**3A**
History Kept: No			Sheet	1 of 1
Structures	Highway On/Under			
Update Screen	Key Routes		SIMS Field Name	
SIMS Table(s)	SIMD003/SIMD004 & ISISSummaryStateandLocal		InvCountyOn/InvCountyUn	

ITEM DESCRIPTION

This item indicates the county in which the Key Route(s) on and/or under the structure are inventoried.

CODING INSTRUCTIONS

This item is entered as part of Key Route linking process. It makes up the first three positions of the Key Route "composite" (Inventory County plus Items 1A-1G) number that is used to link a structure (ISIS) to a roadway (IRIS).

A three-digit field.

NOTE: See the list of county codes for Item 3

ITEM DESCRIPTION

This item identifies the Township or Road District of the Inventory County (Item 3A) for each Key Route linked to a structure.

CODING INSTRUCTIONS

DO NOT ENTER

This item is computer generated based on the roadway data at the point of Key Route linkage.

A two-digit field.

NOTE: See the list of Township/Road District codes in Appendix B

Effective Date: 7/1/2016	ILLINOIS HIGHWAY INFORMATION SYSTEM Structure Information and Procedure Manual			
NBIS Required: Yes	Item Name	**MAINTENANCE COUNTY**	Item No.	**3B**
History Kept: No			Sheet	1 of 1
Structures	All			
Update Screen	Inventory		SIMS Field Name	
SIMS Table(s)	SIMD001 & ISISSummaryStateandLocal		MaintCountyNumber	

ITEM DESCRIPTION

This item identifies the county where the maintenance responsibility resides. The number entered here is used to computer generate Item 2 - Highway District.

State Maintained: In most cases enter the number for the county in which the structure is physically located. In cases where a Highway District has maintenance responsibility for a structure outside its boundaries, this number should reflect the county within the responsible District that is nearest to the structure in order that the District assignment can be adequately made.

County Maintained: Enter the county that has maintenance responsibility.

Township, Municipal or Other Maintenance: Enter the county in which the agency having maintenance responsibility is located.

CODING INSTRUCTIONS

A three-digit field.

Enter the appropriate county code (See the list of county codes for Item 3).

NOTE: This item is required when adding a new structure to the ISIS database

Effective Date: 7/1/2016	ILLINOIS HIGHWAY INFORMATION SYSTEM Structure Information and Procedure Manual			
NBIS Required: No	Item Name	**MAINTENANCE TOWNSHIP**	Item No.	**3B1**
History Kept: No			Sheet	1 of 1
Structures	All			
Update Screen	Inventory		SIMS Field Name	
SIMS Table(s)	SIMD001 & ISISSummaryStateandLocal		MaintTwspCode	

ITEM DESCRIPTION

This item identifies the township responsible for maintenance. The Maintenance Township must always be located within the Maintenance County.

Township or Municipality Maintained: Enter the number for the township or road district with maintenance responsibility for the structure.

State, County or Other Agency Maintained: If Maintenance County (Item 3B) and Inventory County (Item 3A) are the same, enter the same number as the Inventory Township. In cases where the Inventory County and Maintenance County differ, enter the township number for the township within the Maintenance County.

CODING INSTRUCTIONS

A two-digit field.

Enter the appropriate township or road district code (See the list of Township/Road District codes in Appendix B).

NOTE: This item is required when adding a new structure to the ISIS database

ITEM DESCRIPTION

This item indicates the Municipality in which the Key Route on / under the structure is physically located.

If newly incorporated areas are not listed, the District Bureau of Program Development should be contacted to obtain a new code number.

CODING INSTRUCTIONS

DO NOT ENTER

This item is computer generated based on the roadway data at the point of Key Route linkage.

A four-digit field.

NOTE: See the list of Municipality codes in Appendix A

ITEM DESCRIPTION

This item identifies the municipality with the maintenance responsibility for the structure. The municipality that is responsible for maintenance is not always the same municipality where the structure is physically located (i.e., Item 4 – Municipality).

CODING INSTRUCTIONS

A four-digit field.

Enter the appropriate code from Appendix A – Municipality Codes.

If the structure is not maintained by an incorporated city, town, or village, code 0000 (all zeroes).

ITEM DESCRIPTION

The Inventory Route is made up of four data items that require eight digits to report:

Data Item	Description	Length
5A	Record Type	1 digit
5B	Route Signing Prefix	1 digit
5C	Designated Level of Service	1 digit
5D	Route Number	4 digits
5E	Directional Suffix	1 digit

CODING INSTRUCTIONS

DO NOT ENTER – COMPUTER GENERATED

These items are computer generated based on the roadway data at the point of Key Route linkage.

See item descriptions for data items 5A through 5E.

ITEM DESCRIPTION

This item identifies whether the Inventory Route is carried “on” the structure or goes “under” the structure.

CODING INSTRUCTIONS

DO NOT ENTER (This item is computer generated for NBIS purposes only).

All Key Routes associated a structure will have one of the following codes generated for each Key Route.

Code	Description
1	Key Route carried “on” the structure
2	Single Key Route goes “under” the structure
A through Z	Multiple Key Routes go “under” the structure

Effective Date: 11/1/2018	ILLINOIS HIGHWAY INFORMATION SYSTEM Structure Information and Procedure Manual			
NBIS Required: Yes	Item Name	**INVENTORY ROUTE KIND**	Item No.	**5B**
History Kept: No			Sheet	1 of 1
Structures	Highway On/Under			
Update Screen	COMPUTER GENERATED – Key Routes		SIMS Field Name	
SIMS Table(s)	SIMD003/SIMD004		InvRteKindOn/Un (1,2,3)	

ITEM DESCRIPTION

This item identifies the type of Marked Route or Unmarked Route "on" or "under" a structure. The ISIS database will accommodate up to three Marked Routes per Key Route.

CODING INSTRUCTIONS

DO NOT ENTER

This item is computer generated based on the roadway data at the point of Key Route linkage.

A one-digit field.

	Code	Designation
MARKED HIGHWAYS	1	Interstate highways, marked Interstate
	2	U.S. Numbered highways, marked U.S.
	3	State highways, marked Illinois
UNMARKED HIGHWAYS	4	FAS, CH, or TR's unmarked
	5	Municipal Streets
	6	Federal Lands roads
	7	State Lands roads
	8	Other (includes toll roads)

ITEM DESCRIPTION

This item identifies each Marked or Unmarked Route as a mainline route or an appurtenance thereof.

CODING INSTRUCTIONS

DO NOT ENTER

This item is computer generated based on the roadway data at the point of Key Route linkage.

A one-digit field.

Code	Designation
1	Mainline
2	Alternate Route
3	Bypass (marked routes only)
4	Spur (unmarked routes only)
6	Business or Loop (marked routes only)
7	Ramp or Wye (unmarked routes only)
8	Service Road or Frontage Road (unmarked routes only)

Effective Date: 11/1/2018	ILLINOIS HIGHWAY INFORMATION SYSTEM Structure Information and Procedure Manual			
NBIS Required: Yes	Item Name	**INVENTORY ROUTE NUMBER**	Item No.	**5D**
History Kept: No			Sheet	1 of 1
Structures	Highway On/Under			
Update Screen	COMPUTER GENERATED – Key Routes		SIMS Field Name	
SIMS Table(s)	SIMD003/SIMD004		InvRteNbrOn/Un (1,2,3)	

ITEM DESCRIPTION

This item indicates the Marked Route number(s) of each Key Route linked to a structure. For Unmarked Routes, the Key Route number is shown.

CODING INSTRUCTIONS

DO NOT ENTER

This item is computer generated based on the roadway data at the point of Key Route linkage.

A four-digit field.

ITEM DESCRIPTION

This item is the directional suffix to the Marked Route Number. There are no directional suffixes to marked routes in Illinois. All Illinois Marked Routes have a directional suffix of “0”.

CODING INSTRUCTIONS

DO NOT ENTER (This item is computer generated for NBIS purposes only).

Code	Designation
0	Not applicable
1	North
2	East
3	South
4	West

ITEM DESCRIPTION

This item indicates the name or description of the natural or man-made feature being crossed over by a structure. The description should be as distinguishable as possible to allow accuracy in locating the structure.

Local road, street names, or colloquial names should also include route numbers if applicable.

CODING INSTRUCTIONS

A twenty-digit field that includes letters, numbers, spaces between words and special characters.

Abbreviations may be used if they are not ambiguous. Refer to Appendix C page C-1 for a list of suggested abbreviations for descriptive items. Leave all unused spaces blank.

ITEM DESCRIPTION

This item identifies structures on designated defense highways considered to be a critical facilities as defined in the Federal Aid Policy Guide (FAPG).

CODING INSTRUCTIONS

A check box.

ITEM DESCRIPTION

This item indicates the name or description of the facility being carried on a structure. The description should be as distinguishable as possible to allow accuracy in locating the structure.

Local road, street names, or colloquial names should also include route numbers if applicable.

CODING INSTRUCTIONS

A twenty-digit field that includes letters, numbers, spaces between words and special characters.

Abbreviations may be used if they are not ambiguous. Refer to Appendix C page C-1 for a list of suggested abbreviations for descriptive items. Leave all unused spaces blank.

For parallel structures, indicate the direction of traffic flow carried on each structure being inventoried.

ITEM DESCRIPTION

This item indicates the posted name of a bridge. The posted name may be erected at the entrance to a bridge or on a bridge nameplate

CODING INSTRUCTIONS

A twenty-digit field that includes letters, numbers, spaces between words and special characters.

Enter the full name of the bridge, as complete as possible, beginning in the first available space.

Abbreviations may be used if they are not ambiguous. Refer to Appendix C page C-1 for a list of suggested abbreviations for descriptive items. Leave all unused spaces blank.

ITEM DESCRIPTION

This item is a PERMANENT four-digit number assigned to each structure which, when combined with Item 3 - Structure County - forms a unique number for each structure in the state. This number facilitates data management and interagency communications concerning structures.

Twin or parallel structures are numbered individually. A structure with a closed median is considered as one structure, not two.

CODING INSTRUCTIONS

A four-digit field.

Enter the appropriate number in the last four digits of the seven-digit structure number.

The structure numbers allotted to each district range from 0001 through 9999.

Districts may arrange blocks of numbers to identify categories of bridges at their discretion. However, there is no required statewide scheme for this purpose. Specific bridge maintenance categories will be indicated only by Maintenance Responsibility (Item 21).

Once a number has been assigned, it is a permanent identification number and will not be changed to reflect future changes in any categorical scheme.

New structures are to be assigned numbers using the next available number in the appropriate category by district scheme.

Refer to Section E, Identification by Structure Number, in the Introduction for additional instructions regarding the assignment of numbers.

ITEM DESCRIPTION

This item provides general comments about the bridge. Operational "status remarks" should not be recorded here, but should be recorded in Item 41B, Bridge Status Remarks.

CODING INSTRUCTIONS

A unlimited text field.

Enter appropriate comments beginning at the first space available using any combination of letters, numbers, symbols and spaces. Abbreviations can be used as long as they are not ambiguous.

Effective Date: 7/1/2016	ILLINOIS HIGHWAY INFORMATION SYSTEM Structure Information and Procedure Manual			
NBIS Required: No	Item Name	**MULTI-LEVEL STRUCTURE NUMBER**	Item No.	**8B**
History Kept: No			Sheet	1 of 1
Structures	Highway On/Under			
Update Screen	Inventory		SIMS Field Name	
SIMS Table(s)	SIMD001 & ISISSummaryStateandLocal		SNMultiLevel	

ITEM DESCRIPTION

This item indicates the structure number of the bridge immediately over the one being inventoried at multi-level structure locations.

CODING INSTRUCTIONS

A four-digit field.

Enter the four-digit sequence number (Item 8A – Structure Sequence Number) of the 7-digit structure number assigned to the structure immediately overhead. The first three digits of the 7-digit structure number (Item 3-Structure County) are not recorded, since both structures are in the same county. This item is associated with multi-level interchanges.

EXAMPLE:

Structure 012-3456 crosses over structure 012-3457. Structure 012-3457 is being inventoried.

Enter: 3456 in Item 8B for the inventory record of 3457

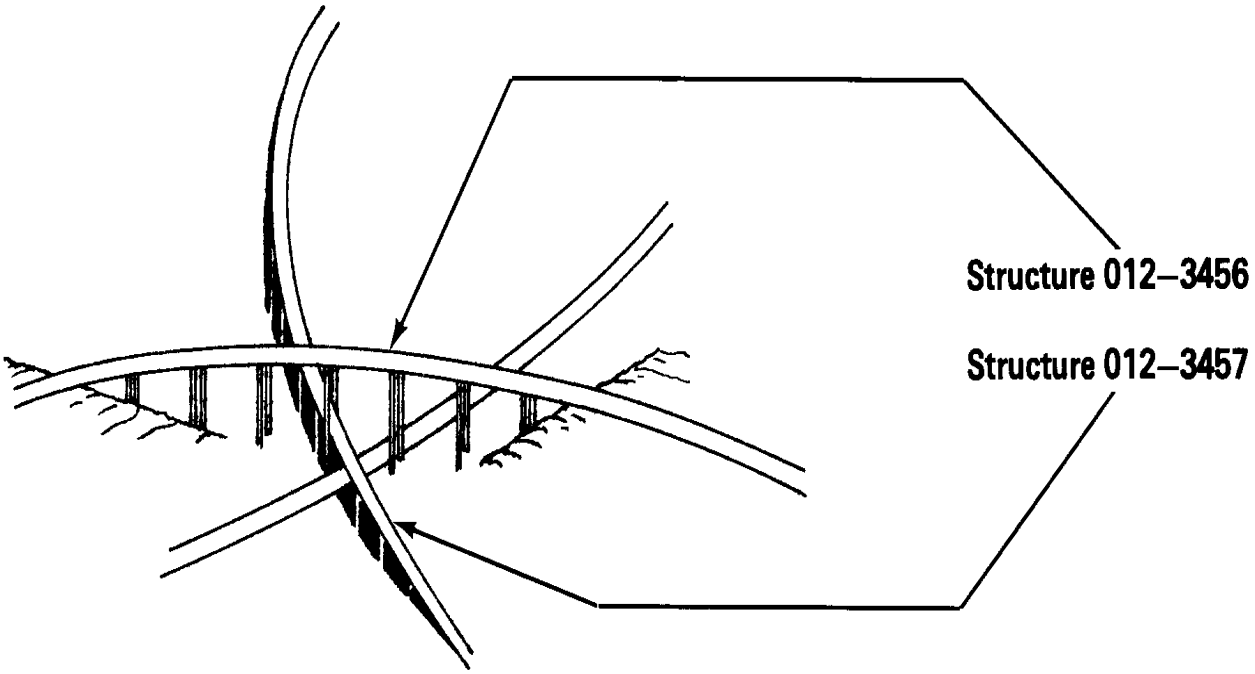

ITEM DESCRIPTION

This item indicates the unique permanent number assigned to each railroad crossing by the railroad company. It is used for referencing purposes.

CODING INSTRUCTIONS

Two seven-digit fields are provided for identification of a maximum of two railroad lines crossing at the bridge.

Enter the appropriate seven-digit number(s) in the field(s) provided.

Leave blank if not applicable.

EXAMPLES:

260632Y
260799K
069891N

Effective Date: 7/1/2016	ILLINOIS HIGHWAY INFORMATION SYSTEM Structure Information and Procedure Manual			
NBIS Required: No	Item Name	**BRIDGE REPLACES NUMBER**	Item No.	**8D**
History Kept: Yes			Sheet	1 of 1
Structures	All			
Update Screen	Inventory		SIMS Field Name	
SIMS Table(s)	SIMD001 & ISISSummaryStateandLocal		SNReplaced	

ITEM DESCRIPTION

This item is used to cross-reference a new (or proposed) structure with the structure that it replaces (or will replace). It aids in maintaining history of the crossing that is accommodated at this location.

CODING INSTRUCTIONS

A seven-digit field.

Enter the structure number of the structure being replaced in the spaces allocated.

This item should be entered into the ISIS database at the same time a new structure's record is added.

Leave blank if not applicable.

EXAMPLE:

New bridge being added is replacing old bridge #011-3002.

Enter: 0113002

ITEM DESCRIPTION

This item is used to cross-reference a structure being replaced with the structure number that replaces it or will replace it. It aids in maintaining history of the crossing that is accommodated at this location.

CODING INSTRUCTIONS

A seven-digit field.

Enter the new structure number in the spaces allocated.

Enter the new structure number into the ISIS database as soon as it is assigned for a proposed structure during a bridge replacement project.

Leave blank if not applicable.

If an existing stucture is replaced by a grade crossing, enter the appropriate three-digit county number followed by four zeros.

If an existing structure is not replaced and the crossing is closed, leave blank.

EXAMPLE:

A structure in Adams County is replaced with a grade crossing, enter: 0010000 .

A structure in Cook County is taken out and barricaded: do not enter a value; leave blank .

A structure in Christian County is being replaced by structure number 011-0199,

Enter: 0110199

ITEM DESCRIPTION

This item is a description of the structure location as it appears on the General Highway Map. It is used to assist in locating the structure in the field or from the office. This description should be keyed to distinguishable map features such as route junctions, Rural Reference Coordinates, township - range sections, street names, rivers, railroads, etc. Reference to features that are known primarily only in the locality of the structure (e.g. "Jones Corner") should be avoided in the location description.

Local agency structures in rural areas on roads not numbered on the General Highway Map (i.e. Township Roads) in counties where the "Rural Reference Coordinates" grid system is used, should use that system in the location description. As an alternative, the relative location within a given section number of a township and range may be used.

CODING INSTRUCTIONS

A 20-digit field, left justified, including letters, numbers, special characters and spaces. All unused spaces are to be left blank.

Abbreviations may be made as long as they are not ambiguous. Punctuation can be omitted if not needed for clarity.

EXAMPLES:

1) A structure on U.S. Route 30 crosses Pisgah Creek 1.5 miles west of the intersection with Illinois Route 7:

   (Item 9)-LOCATION DESCRIPTION: 1.5 MI W ILL 7

2). A structure on a township road in Coles County 11.00 miles north and 14.25 miles west of the origin (000N,000E) of the county's Rural Reference Coordinates grid system:

   (Item 9)-LOCATION DESCRIPTION: 1100N 1425W

3). The location description of the structure described in "2." may also be by its relative location in the southwest corner of Section 26, Township 13 North and Range 7 East:

   (Item 9)-LOCATION DESCRIPTION: SW SEC 26 T13N R7E

(Continued on Next Page)

ITEM DESCRIPTION

4). A structure on a FAS Route 1256 crosses a creek 3.3. miles south of County Highway W235.

(Item 9)-LOCATION DESCRIPTION: 3.3 MI S CH W235

5). Oak Street in Redbud crosses a creek between 7th and 8th Streets:

(Item 9)-LOCATION DESCRIPTION: ON OAK ST W OF 8TH

ITEM DESCRIPTION

This item indicates the practical unobstructed vertical clearance provided for free passage of vehicular traffic along a route without regard to lane markings. The minimum vertical clearance for a 10-foot width of the pavement or traveled part of the roadway where the clearance is greatest shall be recorded and coded in feet and inches. (See Appendix C Figure 7.1)

This information is not used to route vehicles with loads that exceed legal size limitations. This information is used for NBIP reporting purposes.

This item can be obtained through field measurement only.

CODING INSTRUCTIONS

A four-digit field.

Record the appropriate measurement in feet and inches. The first two digits indicate feet and the second two digits indicate inches.

Round dimension measurements down to the nearest inch.

For structures with one roadway either on or under the structure, enter the 10-foot minimum vertical clearance over the inventory route (without regard to where it occurs across the pavement) in Item 10A, “South/East” column of the 10 Ft Vertical field on the update screens.

For structures with two roadways either on or under the structure, enter the 10-foot minimum vertical clearance over the inventory route (without regard to where it occurs across the pavement):

- In Item 10A for the southbound or eastbound direction of traffic
  (“South/East” column of the 10 Ft Vertical field on the update screens)

- In Item 10B for the northbound or westbound direction of traffic
  (“North/West” column of the 10 Ft Vertical field on the update screens)

When no restriction exists over the roadway, enter 9911.

NOTE: “Direction of traffic” refers to cardinal compass direction of traffic at the structure and correlates to neither IRIS Route Direction – Compass nor Route Station.

EXAMPLES:

	ITEM 10A		ITEM 10B	
	South/East Minimum	Vertical 10 ft Min	North/West Minimum	Vertical 10 ft Min
One Roadway 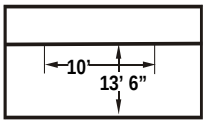		13' 06"		
Two Roadways 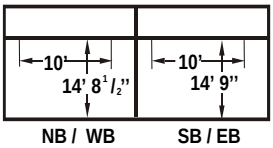		14' 09"		14' 08"
More Than Two Roadways 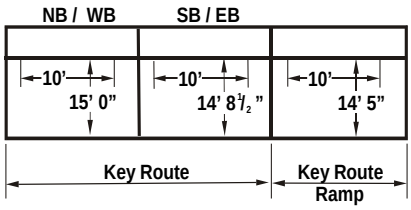		Key Route ----------> 14' 08" Ramp ----------> 14' 05"		15' 00"
No Overhead Restriction		99' 11"		
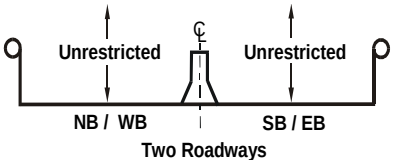		99' 11"		99' 11"

ITEM DESCRIPTION

This item indicates the milepoint referenced at the beginning of the structure in the direction of increasing mileage of the inventory route.

CODING INSTRUCTIONS

DO NOT ENTER

Recorded to the thousandth's position, this item will be computer generated for NBIS purposes using key route stationing. See Item 1G for information regarding Key Route Station.

A six-digit field.

ITEM DESCRIPTION

This item provides the method whereby the route specific data items can be extracted from the IRIS file and thus eliminates a duplication of entry. When the Key Route and station on ISIS match a Key Route and station on IRIS and the link indicator is set to 'Y' (YES); the following data items will automatically transfer from IRIS to ISIS:

ISIS Item numbers: 3A, 3A1, 4, 25, 26, 29, 30, 100, 104, 109, 110, 135, and 136.

CODING INSTRUCTIONS

A one-digit field.

Code	Description
Y	Key Route 'is Linked' to IRIS file
N	Key Route 'is not Linked' to IRIS file
X	Key Route 'is not Linked' because IRIS file indicates that the road is not open to public travel. This may be due to the route does not exist or the stationing is beyond the end of the

Linking should be accomplished using either the manual or map based linking tool on the Key Routes screen. Use the relink tool on the Key Routes screen to move or change the point of linkage. For both linking tools, follow the on screen prompts to and code the following data items to complete linkage.

ISIS Item numbers: 19, 28, 47, 47A/B, 53A/54B1, 53B/54B2, 55B, 56, 102, 114, and 115.

NOTE: The code 'X' will appear whenever attempting to link an IRIS Key Route that is coded 'NOT OPEN TO PUBLIC TRAVEL'. This indicates that linking should not occur. The 'not open' status on the IRIS file will have to be changed to allow for linking, or the link indicator on ISIS should be changed to 'N'. An indicator of 'X' is not considered valid and should always be changed.

ITEM DESCRIPTION

This item identifies the structure's latitude and it is displayed in decimal degrees.

The latitude is computer generated following the entry of valid Key Route/On or Key Route/Under information into the ISIS database. It is calculated using the point of linkage (Key Route Station – Item 1G) on the Key Route.

CODING INSTRUCTIONS

DO NOT ENTER

A ten-digit number, with eight positions to the right of the decimal.

ITEM DESCRIPTION

This item identifies the structure's longitude and it is displayed in decimal degrees.

The longitude is computer generated following the entry of valid Key Route/On or Key Route/Under information into the ISIS database. It is calculated using the point of linkage (Key Route Station – Item 1G) on the Key Route.

CODING INSTRUCTIONS

DO NOT ENTER

A ten-digit number, with eight positions to the right of the decimal.

Effective Date: 7/1/2016	ILLINOIS HIGHWAY INFORMATION SYSTEM Structure Information and Procedure Manual			
NBIS Required: Yes	Item Name	**BYPASS LENGTH**	Item No.	**19**
History Kept: No			Sheet	1 of 1
Structures	Highway On/Under			
Update Screen	Key Routes		SIMS Field Name	
SIMS Table(s)	SIMD003/SIMD004 & ISISSummaryStateandLocal		BypassLengthOn/Un	

ITEM DESCRIPTION

This item considers the length of bypass required if the structure is closed to traffic. The additional travel distance required, following a designated detour over a road or bridge of equal or greater quality, is reported in Bypass Length. Consider the potential for moving the volume and type of traffic being served when making this judgment.

CODING INSTRUCTIONS

A two-digit field. Enter the additional travel length required to the nearest mile.

EXAMPLES:

Situation	Enter
Temporary ground level bypass available	00
Structure bypassable utilizing interchange ramps	00
Structure over wide river, not bypassable, 21.4 miles additional travel	21
Structure (not an interchange) bypassable using parallel structure	01
Structure not bypassable,108 miles additional travel required.	99
Structure not bypassable, dead end	99

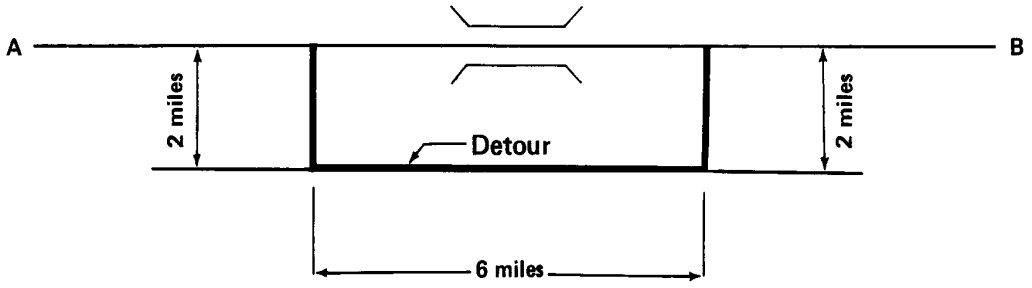

Additional travel from A to B = 4 miles 04

ITEM DESCRIPTION

This item indicates the toll status of the structure.

The Toll Facility Indicator is used to associate needs with toll and non-toll facilities.

CODING INSTRUCTIONS

A one-digit field.

Enter the appropriate code as listed below:

Code	Designation
Free Road - (The bridge is toll free and carries a toll free highway):	
0	No toll
Toll Bridges - (Tolls are paid specifically to use the structure):	
1	State owned
2	County owned
3	City owned
4	Other publicly owned
5	Privately owned
Toll Roads - (Tolls are paid to use the toll road facility which includes use of the bridge):	
6	Toll road
7	On Interstate toll segment under Secretarial Agreement. Structure functions as a part of the toll segment.
8	Toll bridge is a segment under Secretarial Agreement. Structure is separate agreement from highway segment.

ITEM DESCRIPTION

This two-digit code identifies the agency(s) responsible for assuring that the maintenance and needed repairs are made to the structure.

If more than one agency are jointly responsible, report the agencies in the order of primary and secondary responsibility. If equally responsible, report the agencies in the order of hierarchy as listed below. If only one agency is responsible, code "0" (zero) in the first position and the agency code in the second.

CODING INSTRUCTIONS

A two-digit field.

Enter the appropriate code(s) as listed below.

Code	Description
0	Unknown, or a placeholder code for the first position if only one agency is responsible
1	Illinois Department of Transportation
2	Illinois State Toll Highway Authority
3	County
4	Municipality
5	Other Federal Agencies (Not listed below)
6	Railroad
7	Other or Private (Not listed below)
8	Adjacent state
9	Township or Road District

Code	Description
A	State Park, Forest or Reservation (excludes IL Dept. of Natural Resources)
B	Local Park, Forest, or Reservation
C	Other State Agency (Not listed)
D	Other Local Agency (Not listed)
E	Local Toll Authority
F	US Forest Service
G	National Park Service
H	Corps of Engineers/Military Base
I	IL Dept. of Natural Resources

NOTE: This item is required when adding a new structure to the ISIS database

EXAMPLES:

Designation	Enter
Township	09
IDOT, County (Equal Responsibility)	13
IDOT, County, Township (IDOT Primary)	13
RR-Other Local Agency (Other Local Agency Primary)	D6
Unknown	00

Hard Copies Uncontrolled

ITEM DESCRIPTION

This item indicates the actual owner(s) of the bridge. This item is required for the NBIS. However, for the purposes of the Illinois structure system, ownership is interpreted to mean the same as maintenance responsibility.

CODING INSTRUCTIONS

DO NOT ENTER (This item is computer generated for NBIS purposes only).

Calculation of this data item is based on Maintenance Responsibility (Item 21).

ITEM DESCRIPTION

This item indicates the agency that is responsible for submitting inventory and inspection data for the structure.

Those structures which have a value of "1" (IDOT Bureau of Maintenance) are the only structures whose inspections can be updated through both the ISIS and the BIS system. All other codes (0 and 2-9) are considered "Local" in this context and can only be updated through ISIS.

CODING INSTRUCTIONS

A one-digit field.

Enter the appropriate code for each structure.

Code	Agency
1	Illinois Department of Transportation-Bureau of Operations
2	Illinois Department of Transportation-Bureau of Local Roads
3	County
4	Municipality
5	Federal
6	Railroad
7	Illinois Department of Natural Resources
8	Illinois State Toll Highway Authority
9	Township or Road District
0	Other or Private

NOTE: This item is required when adding a new structure to the ISIS database

Effective Date: 11/1/2018	ILLINOIS HIGHWAY INFORMATION SYSTEM Structure Information and Procedure Manual			
NBIS Required: No	Item Name	**URBAN AREA**	Item No.	**25**
History Kept: No			Sheet	1 of 1
Structures	Highway On/Under			
Update Screen	COMPUTER GENERATED – Key Routes		SIMS Field Name	
SIMS Table(s)	SIMD003/SIMD004 & ISISSummaryStateandLocal		UrbanAreaCodeOn/Un	

ITEM DESCRIPTION

This item indicates the urban area, if any, in which the structure is located. An urban designation identifies an area as having a population of 5,000 or more.

CODING INSTRUCTIONS

DO NOT ENTER

This item is computer generated based on the roadway data at the point of Key Route linkage.

A four-digit field.

Code	Description	Code	Description	Code	Description
0150	Anna	2070	Freeport	3945	Mount Vernon
0375	Beardstown	2100	Galesburg	3980	Murphysboro
0480	Benton	2130	Geneseo	4385	Olney
0540	Bloomington	2140	Genoa	4450	Ottawa
0605	Braidwood	2175	Gillespie	4500	Pana
0610	Breese	2365	Greenville	4520	Paris
0775	Byron	2460	Harrisburg	4590	Peoria
0845	Canton	2475	Harvard	4650	Pinckneyville
0865	Carbondale	2590	Highland	4720	Pontiac
0875	Carlinville	2610	Hillsboro	4760	Princeton
0885	Carmi	2675	Hoopeston	4780	Quincy
0965	Centralia	2825	Jacksonville	4810	Rantoul
0990	Champaign	2845	Jerseyville	4930	Robinson
1010	Charleston	2915	Kankakee	4935	Rochelle
1045	Chester	2980	Kewanee	4965	Rockford
1051	Chicago	3145	LaSalle	4970	Rock Island
1145	Clinton	3155	Lawrenceville	5140	St. Joseph
1395	Danville	3240	Lincoln	5160	Salem
1410	Decatur	3270	Litchfield	5390	Somonauk
1435	DeKalb	3435	Macomb	5400	South Beloit
1500	Dixon	3460	Mahomet	5480	Springfield
1570	Du Quoin	3525	Marengo	5510	Staunton
1580	Dwight	3625	Mattoon	5525	Sterling
1603	East Cape Girardeau	3675	Mendota	5590	Streator
1615	East Dubuque	3705	Metropolis	5680	Taylorville
1660	East St. Louis	3820	Monmouth	5870	Vandalia
1690	Effingham	3835	Monticello	6050	Waterloo
1840	Eureka	3845	Morris	6060	Watseka
1875	Fairfield	3900	Mount Carmel	6155	West Frankfort

ITEM DESCRIPTION

This item indicates the level of service provided by the route on and/or under the structure in relation to the complete highway network.

This information is used to group highway data by character of service for funding purposes.

CODING INSTRUCTIONS

DO NOT ENTER

This item is computer generated based on the roadway data at the point of Key Route linkage.

A one-digit field.

Code	Classification
1	Interstate
2	Other Freeways & Expressways
3	Other Principal Arterials
4	Minor Arterial
5	Major Collector
6	Minor Collector
7	Local

ITEM DESCRIPTION

The Construction information is made up of nine items:

Data Item	Description	Length
27	Construction Type	1 digit
27A	Construction Year	4 digits
27B	Construction Route Number	7 digits
27C	Construction Section Number	25 digits
27D	Construction Station Number	10 digits
27E	Construction Contract Number	6 digits
27F	Federal Aid Project Number	14 digits
27G	Built By (Agency)	1 digits
27H	Construction Remarks	79 digit

CODING INSTRUCTIONS

Reference the individual Data Item Description pages for a detailed discussion of each item.

ITEM DESCRIPTION

This item indicates whether the type of construction history information is for the Original construction (O) (note: an alpha “O”, not a numeric zero), Reconstruction (R), or Maintenance/Repairs (M) of the structure. Code “X” is reserved for unique situations.

Original construction (O) pertains to the original building of the structure. A single structure number should never have more than one Construction Type Indicator record coded “O”.

Reconstruction (R) is defined as the work necessary to bring the structure up to acceptable standards for the system on which it is located. Normally, this would eliminate all structural deficiencies and safety defects of the structure.

Maintenance/Repairs (M) is defined as any work that does not meet the definition of Reconstruction.

As a guide to determine if the construction should be recorded as Reconstruction or Maintenance/Repairs, inquire on the inspection report recorded after the construction was completed (Menu Selection # 4). The condition rating items should all have a value of '7' or greater and the appraisal items should all be '6' or greater to qualify as Reconstruction. Any construction that does not meet these criteria should be considered as Maintenance/Repairs. An exception can be made for the rehabilitation of through trusses. If the extent of the construction removes all the deficiencies except for its geometry, this should be considered as Reconstruction in as much as this type of structure cannot be widened to eliminate its geometric deficiency.

If the final inspection is not available prior to the recording of this item, use your best engineering judgment. This item can easily be changed when the final inspection becomes available.

Code “X” is reserved for use with structures whose structure numbers have been inadvertently reused.

Example: a structure 000-1234 was originally built in 1924 (Item 27 coded “O”), completely removed in 1968 and a new structure erected 1200 feet from the original. However, the same structure number 000-1234 was given to the replacement structure (when a new structure number should have been assigned). Because the error was not detected within a reasonable amount of time, the same structure number has been recording information in ISIS for two totally different structures. The “X” code will be used to differentiate between the old and the new structures’ history, inventory and inspection information on the ISIS database and in the stored archive records of ISIS data. The 1924 Construction Type record’s code “O” will be changed to “X” with a notation made in the Remarks field as to the date the structure was replaced. The 1968 Construction Type’s record will be given the “O” code. Contact the Central Office, Data Management Unit, prior to assigning the “X” code.

CODING INSTRUCTIONS

A one-digit field.

Enter a value for all structures.

Code	Construction Type Indicator
O (alpha O, not zero)	Original
R	Reconstruction
M	Maintenance/Repairs
X	Used only in unique situations. Contact the Central Office, Bureau of Urban Program Planning, Data Management Unit, prior to use.

ITEM DESCRIPTION

This item is to record the calendar year of the construction, reconstruction, or maintenance/repair of the structure as indicated by Item 27, Construction Type Indicator.

CODING INSTRUCTIONS

A four-digit field.

This field must be coded for the Construction/Reconstruction record to be accepted into the ISIS database.

Code all four digits of the calendar year in which the construction, reconstruction or maintenance/repair of the structure was 90% or more completed.

If the year is unknown, provide a best estimate.

ITEM DESCRIPTION

This item identifies the FAI, FAP, FAS, SBI, CH or other route designation that was part of the structure's construction identity.

CODING INSTRUCTIONS

A unlimited text field.

Left justify and leave unused positions blank.

Code the actual route designation appearing on the construction plans.

EXAMPLE:

A structure constructed on FAI 55 & 70.

CONSTRUCTION ROUTE ENTER: FAI 55

A structure on County Highway 15 for which all deficiencies have been eliminated in order to bring it to currently acceptable standards (reconstruction).

CONSTRUCTION ROUTE ENTER: CH 15.

ITEM DESCRIPTION

This item identifies a code that is applied to each improvement to indicate the type of work being done and the continuity of work along the route.

The Construction Section Number, along with the Construction Route, forms a unique identification of the structure. It allows distinct reference to actual construction plans and records.

CODING INSTRUCTIONS

A 25-digit field.

Omit the word "Section" and begin entry in the first position provided. Enter the number exactly as it appears on construction plans, utilizing numbers, letters, symbols and punctuation.

EXAMPLE:

Designation	Enter
Section 102, 103 (VB-1)	102, 103 (VB-1)
Section 10-00156-01-BR	10-00156-01-BR

ITEM DESCRIPTION

This item identifies the construction station number for the structure, as indicated on the design plans.

Record the construction route station number for the midpoint of the structure along its longitudinal centerline.

When a structure crossing a highway has been assigned a construction section according to the construction route designation for the highway that it crosses, the number of the construction route station for the intersection of the center lines of the two highways is to be used.

CODING INSTRUCTIONS

A ten-digit field.

Enter the station number beginning in the first available position. Include the plus sign and decimal point as individual characters occupying their own positions.

Leave unused positions blank.

ITEM DESCRIPTION

This field identifies the contract number assigned for a construction contract.

CODING INSTRUCTIONS

A six-digit field.

Enter the contract number, beginning in the first available position.

Leave unused positions blank.

ITEM DESCRIPTION

This item identifies, by project number, a construction or reconstruction project in which Federal funds have been used.

CODING INSTRUCTIONS

A fourteen digit field, usually subdivided as follows:

(a) Designation - Four digits are provided for a four-character code to represent project designation. This field is left justified, leaving unused spaces blank.

(b) Route - The fifth, sixth and seventh positions are provided for route identification. Right justify and fill unused positions with zeros.

(c) Section - The eighth position is provided for a 1-digit section number code.

(d) Agreement - The ninth, tenth and eleventh positions are provided for the three-digit agreement number. Right justify and fill unused positions with zeros.

(e) Milepost - The last three positions are provided for the milepost number as used for interstate project numbers. Code zeros when not applicable.

EXAMPLE: Federal Aid Project Number F-81-1(1)

	Enter
FEDERAL AID PROJECT DESIGNATION	F ---
ROUTE and SECTION NUMBER	0811
AGREEMENT NUMBER	001
MILEPOST	000
-OR-	F---0811001000

(where "---" signifies 3 blank spaces)

The Federal Aid Project Number has historically assumed many different forms. Therefore, the FA Project Number being coded may not conform to the format specified for this item, making identification of the separate elements difficult. In this case, the following procedures may be used for coding:

Designation - Code the alphabetic prefix into the four-position field specified for this item. Some examples of designations are: S, SG, SF, SI, SU, SFG and US. (This is only a partial listing of possible combinations.) Left-Justify and leave unused positions blank.

Route/Section Number/Agreement Number/Milepost - Whenever these separate categories cannot be determined, use the entire 10 positions provided and code the project number (other than the prefix coded into Designation) without regard to item. Code the parentheses, hyphens, etc., which are part of the project number. In this case, leave unused positions blank.

EXAMPLES:

a. Project Number NRS-28(3)-B

	Enter
FEDERAL AID PROJECT DESIGNATION	NRS-
ROUTE/SECTION NUMBER	28(3
AGREEMENT NUMBER	)-B
MILEPOST	---
-OR-	NRS-28(3)-B

(where "---" signifies 3 blank spaces)

b. Interstate 70 Project Number I-70-3(8)116

FEDERAL AID PROJECT DESIGNATION	I ---
ROUTE/SECTION NUMBER	0703
AGREEMENT NUMBER	(8)
MILEPOST	116
-OR-	I ---0703(8)116

(where "---" signifies 3 blank spaces)

ITEM DESCRIPTION

This item identifies the agency that originally built, reconstructed or repaired the structure.

CODING INSTRUCTIONS

A one-digit field.

Enter the code number for the agency that built, reconstructed, or was responsible for the maintenance/repair of the structure.

Code	Agency
0	Unknown
1	Illinois Department of Transportation
2	Other State Agency
3	County Agency
4	City
5	Federal Agency
6	Railroad
7	Other or Private
8	Combination
9	Township or Road District

ITEM DESCRIPTION

Any pertinent remarks about the construction or reconstruction of the structure may be entered in this field. It is recommended that the scope of work be identified.

CODING INSTRUCTIONS

A unlimited text field.

Abbreviations may be used as long as they are not ambiguous. Punctuation can be omitted if not needed for clarity.

ITEM DESCRIPTION

This item indicates the number of lanes being carried by the key route on or under the structure. Include all lanes carrying highway traffic which are striped or otherwise operate as a full width traffic lane for the entire length on or under the structure. This shall include any full width merge lanes or turn lanes. Ramp lanes shall be included only if they do not have a separate Key Route designated on/under the structure.

An aggregate number of lanes on or under the structure can be obtained by totaling the individual number of lanes for each key route utilizing the structure.

CODING INSTRUCTIONS

A one-digit field.

Enter the number of key route lanes carried on or under the structure.

Fill leading spaces with zeros when applicable.

SPECIAL NOTE: Per the Manual for Uniform Traffic Control Devices (MUTCD), a structure with a bridge roadway width (ISIS Item 51) of less than 16 feet is considered 1 lane.

EXAMPLES:

For Structure 000-0012:

I-55 has 2 lanes on the structure
I-55 has a partial merge lane on the structure

Code: 2 in Item 28 for the Key Route/On record of I-55. The aggregate number of lanes is 2.

EXAMPLES: (Continued)

For Structure 000-0092:

FAP 10	has 4 lanes under the structure
SBI-3	has 2 lanes under the structure
Main Street	has 3 lanes under the structure
Pine Street	has 3 lanes under the structure

Code: 4, 2, 3, 3 in Item 28 respectively for each of the Key Route/Under records described above. The aggregate number of lanes is twelve.

NOTE: Discussion regarding aggregate number of lanes is used for clarification only. The aggregate number of lanes is not to be entered into the ISIS database.

ITEM DESCRIPTION

This item indicates the Annual Average Daily Traffic (AADT) for the Key Route at the structure's location. It is to reflect the most recent traffic data available and must be compatible with other items reported for the structure. For instance, Item 29 includes truck traffic reported in Item 109. For parallel structures, the traffic is to be reported for each separately - not the total for both directions.

CODING INSTRUCTIONS

DO NOT ENTER

This item is computer generated based on the roadway data at the point of Key Route linkage.

A six-digit field.

NOTE: For linked structures, the IRIS file's AADT for the key route station at which a structure resides is automatically halved in the ISIS database when the structure's number of lanes (ISIS Item 28) is less than the IRIS file's number of lanes (IRIS Item 16) recorded at that same key route station.

ITEM DESCRIPTION

This item records the year of the Annual Average Daily Traffic reported for the Key Route as indicated in Item 29.

CODING INSTRUCTIONS

DO NOT ENTER

This item is computer generated based on the roadway data at the point of Key Route linkage.

A four-digit field.

ITEM DESCRIPTION

This item indicates the live load for which the structure was designed.

CODING INSTRUCTIONS

A two-digit field.

Enter the appropriate code from the following list:

Code	Design Load
01	HS20+MOD
02	HS20 or MS18
03	HS15
04	H20
05	H15
06	H10
07	I20
08	I15
09	I10
10	24-T Roller or 125# Sq. Ft. Roadway
11	15-T Roller
12	12-T Roller
13	50 Ton Street Car, Steam Eng. Road Roller
14	Cooper E-60
15	Cooper E-72
16	Cooper E-80
20	HS25
21	HS25+MOD
80	Pedestrian
93	HL93
99	Unknown

ITEM DESCRIPTION

This item indicates the total weight of all structural steel shapes and plates, steel and iron castings, steel forging, wrought iron and miscellaneous metals. It includes cables, anchor bolts, cast bronze plates, lead plates and rolled copper-alloy plates, but does not include shear connectors, reinforcement or prestress steel for concrete, drainage systems, light standards, overhead sign structures, mast arms, sign posts, elastomeric bearings and joints. This weight is indicated on the bridge plans.

CODING INSTRUCTIONS

A nine-digit field.

Enter the weight of the items described above in pounds.

Effective Date: 2/1/2017	ILLINOIS HIGHWAY INFORMATION SYSTEM Structure Information and Procedure Manual			
NBIS Required: Yes	Item Name	**APPROACH ROADWAY WIDTH**	Item No.	**32**
History Kept: No			Sheet	1 of 2
Structures	Highway On			
Update Screen	Inventory		SIMS Field Name	
SIMS Table(s)	SIMD001 & ISISSummaryStateandLocal		ApprRdwyWidth	

ITEM DESCRIPTION

This item provides a number that represents the normal width of usable roadway approaching the structure. Usable roadway width will include the width of traffic lanes and the widths of shoulders where shoulders are defined as follows:

Shoulders must be constructed and normally maintained flush with the adjacent traffic lane, and must be structurally adequate for all weather and traffic conditions consistent with the facility carried.

Unstabilized grass or dirt, with no base course, flush with and beside the traffic lane is not to be considered a shoulder for this item. When there is a variation between the approaches at either end of the structure, record and code the most restrictive of the approach conditions.

This item is to be recorded for the highway on the structure only.

CODING INSTRUCTIONS

A four-digit field, composed of feet and tenths of feet.

Enter the value filling leading spaces with zeros.

Enter 0.0’ if there is no highway on the structure.

For structures with medians of any type and double-decked structures, this item should be coded as the sum of the usable roadway widths for the approach roadways (i.e., all median widths that do not qualify as shoulders should not be included in this dimension).

EXAMPLES:

Left Shoulder	Left Roadway	Median Shoulders	Right Roadway	Right Shoulder	Enter
4.0	-	-	16	6.0	26.0
6.0	-	-	36	12.0	54.0
12.0	48	30	48	12.0	150.0
10.0	24	16	36	10.0	96.0

The last example above represents the coding method for a structure in which the most restrictive approach has the cross-section shown below:

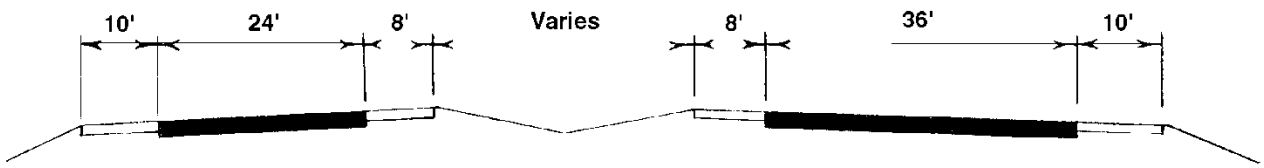

Regardless of whether the median is open or closed, the data coded must be compatible with the other related route and bridge data (i.e., if Item 51 - Bridge Roadway Width, Curb-to-Curb is for traffic in one direction only, then Items 28, 29, 32, etc. must be for traffic in one direction only).

If a ramp is adjacent to the through lanes approaching the structure, it shall be included in the approach roadway width. The total approach roadway width for the example below is 94 feet (a code of 0940).

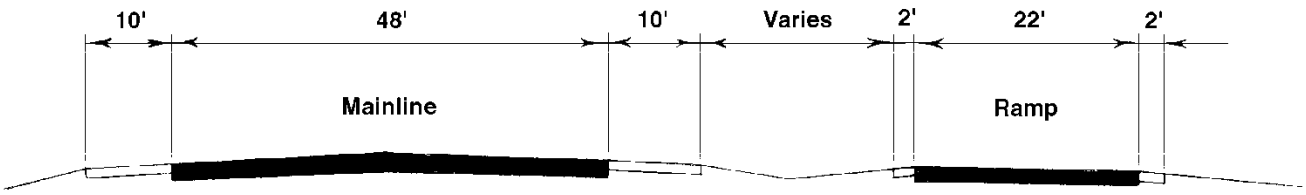

Effective Date: 7/1/2016	ILLINOIS HIGHWAY INFORMATION SYSTEM Structure Information and Procedure Manual			
NBIS Required: Yes	Item Name	**BRIDGE MEDIAN TYPE**	Item No.	**33**
History Kept: No			Sheet	1 of 1
Structures	Highway On			
Update Screen	Inventory		SIMS Field Name	
SIMS Table(s)	SIMD001 & ISISSummaryStateandLocal		MedianType	

ITEM DESCRIPTION

This item indicates the type of median employed to physically divide the traveled way on the structure into separate roadways, usually to provide safety for opposite directions of traffic.

CODING INSTRUCTIONS

A one-digit field.

Enter the most applicable code listed below. All structures that carry either one-way or two-way traffic separated only by a centerline will be coded “0” (zero) for no median. Medians denoted only by striping or a rumble strip with no curb should be coded as “2” – Mountable, all types”.

Code	Median Type
0	None
1	Open Median
2	Closed Median, Mountable, all types
3	Closed Median, Curb
4	Closed Median, Wall
5	Closed Median, Guardrail
6	Closed Median, Fence
7	Closed Median, Other, greater than 18” high
8	Closed Median, Other, equal to or less than 18” high

EXAMPLES:

Code

1

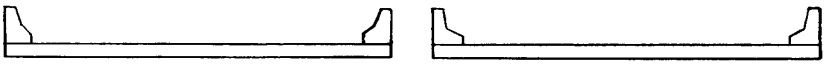

Open Median

2

Closed Median

7 or 8
(Depending on
height of parapet wall)

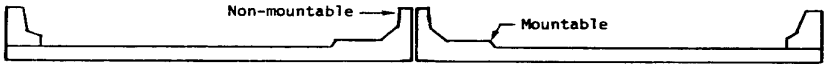

Closed Median with Non-mountable Barrier

ITEM DESCRIPTION

This item provides the total median width for the structure to the nearest foot. This measurement is the total width between outside edges for mountable types (such as rumble-strips) and between outside faces of curbs, walls, guardrails, etc. For variable width medians code the largest measurement.

CODING INSTRUCTIONS

A two-digit field.

Enter the total width to the nearest foot.

Leave blank if there is no median.

Effective Date: 7/1/2016	ILLINOIS HIGHWAY INFORMATION SYSTEM Structure Information and Procedure Manual			
NBIS Required: No	Item Name	**SKEW DIRECTION**	Item No.	**34**
History Kept: No			Sheet	1 of 1
Structures	All			
Update Screen	Inventory		SIMS Field Name	
SIMS Table(s)	SIMD001 & ISISSummaryStateandLocal		SkewDirection	

ITEM DESCRIPTION

This item indicates the skew direction of the structure, i.e., which end of a pier is ahead of the other with respect to the centerline of the roadway.

CODING INSTRUCTIONS

A one-digit field.

Enter the appropriate code for each structure.

Code	Direction
N	No Angle
R	Right Ahead
L	Left Ahead

EXAMPLE:

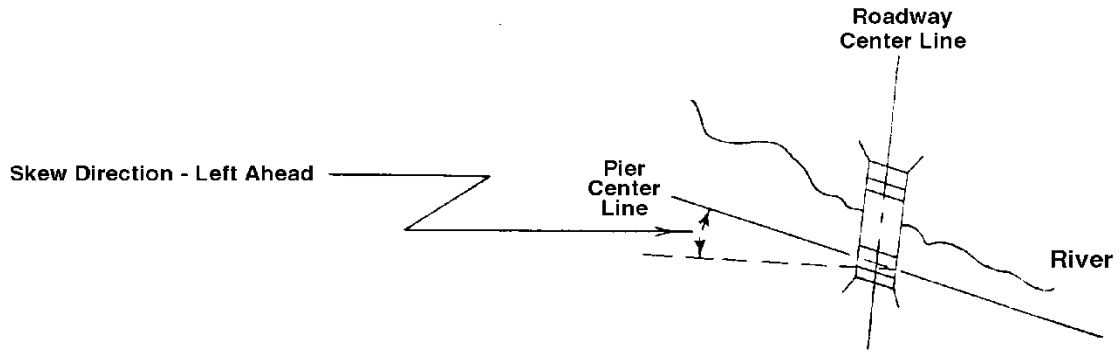

ITEM DESCRIPTION

This item indicates the skew angle of the structure. This is the angle between the centerline of a pier and a line perpendicular to the roadway centerline.

This measurement is in whole degrees and can be taken directly from plans. If no plans are available, the angle is to be field measured, if possible. If the skew varies, record the approximate average. If there is a major variation in skew, check the “Varying” checkbox.

CODING INSTRUCTIONS

A two-digit field.

If there is no skew angle, leave blank.

EXAMPLE:

Skew Angle	Enter
5° 10’ 30”	5
35° 40’ 55”	36

ITEM DESCRIPTION

This item indicates if the structure is flared (i.e., the width of the structure varies). Generally, such variance will result from ramps converging with or diverging from the through lanes on the structure, but there may be other causes. Minor flares at ends of structures should be ignored.

CODING INSTRUCTIONS

A one-digit field.

Enter the appropriate code for each structure.

Code	Description
1	Yes, flared
0	No flare

ITEM DESCRIPTION

These items appraise the adequacy of traffic safety features and include the following data elements for the inventory route on the structure:

Data Item	Description	Length
36A	Bridge Railings	1 digit
36B	Transitions	1 digit
36C	Approach Guardrail	1 digit
36D	Approach Guardrail Ends	1 digit

History is retained for this item based on each Inspection Data (Item 90).

CODING INSTRUCTIONS

Reference the individual Data Item Description pages for a detailed discussion of each item.

ITEM DESCRIPTION

This is a traffic safety feature item. The bridge rail is to be appraised to evaluate its adequacy in relation to current standards for the highway facility carried by the structure.

Factors that affect the proper functioning of bridge railings are material, strength and geometric features. Railings should be capable of retaining and smoothly redirecting an errant vehicle. Bridge railings that have been successfully crash tested for the speed limit of the highway being served are always considered as adequate. The standards for crash testing are published in the National Cooperative Highway Research Program (NCHRP) Report 350 published by the Transportation Research Board (TRB).

Crash tested rails are required for all bridges on designated NHS routes as indicated by Item 104 – National Highway System. They are also required on non-NHS routes except in the following cases:

- Bridges with current ADT (Item 29) less than 1,000 vehicles per day.
- Bridges in urban areas where the regulatory speed limit is less than 40 mph and the roadway cross-section is a curb and gutter design ("curb and gutter design" is described as a bridge with raised sidewalks or having a non-mountable curb between the roadway and the bridge rail).

When a crash tested bridge rail is not required, it must meet the requirements of the current AASHTO Standard Specifications for Highway Bridges. All standard bridge railings currently detailed in the IDOT Bridge Manual conform at least to the AASHTO Standard Specifications.

The following table provides the applicable criteria for appraising a crash tested rail with regard to the speed limit of the facility being served.

Crash Testing Criteria	
Crash Testing Level	Maximum Speed
TL1	30 mph
TL2	40 mph
TL3 – TL6	65 mph

Diagrams of various rails in common usage in Illinois, including all currently standard rails, are provided on pages following.

NOTE: History is retained for this item based on each Inspection Date (Item 90)

CODING INSTRUCTIONS

A one-digit field.

Enter the appropriate code listed below.

Code	Description
N	Not applicable or safety feature not required
1	No bridge railing
2	Bridge railing does not meet currently acceptable standards
3	Bridge railing meets currently acceptable standards

EXAMPLES:

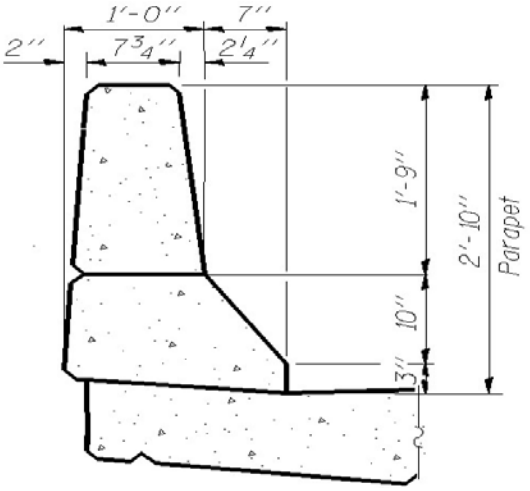

"New Jersey" Parapet
Item 36A = 3
Crash Test: TL4

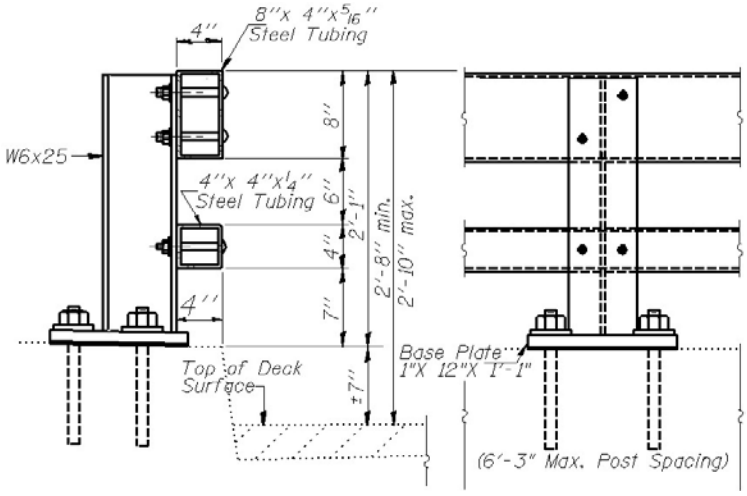

Curb Mounted Steel
Retrofit Rail, "2399" (Std. R-31)
Item 36A = 3 – Crash Test: TL4

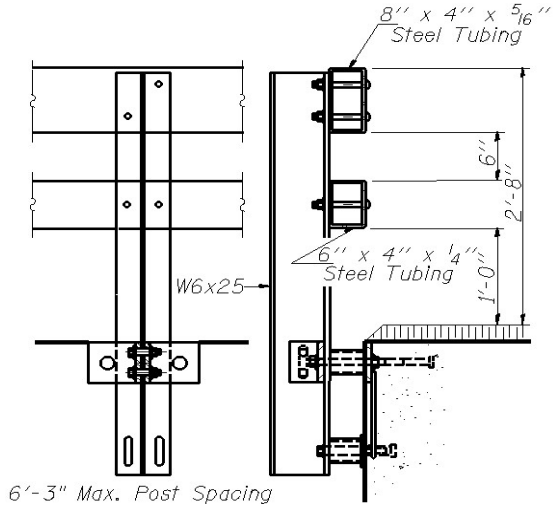

Type "SM" Steel Rail (Std. R-34)
Item 36A = 3
Crash Test: TL4

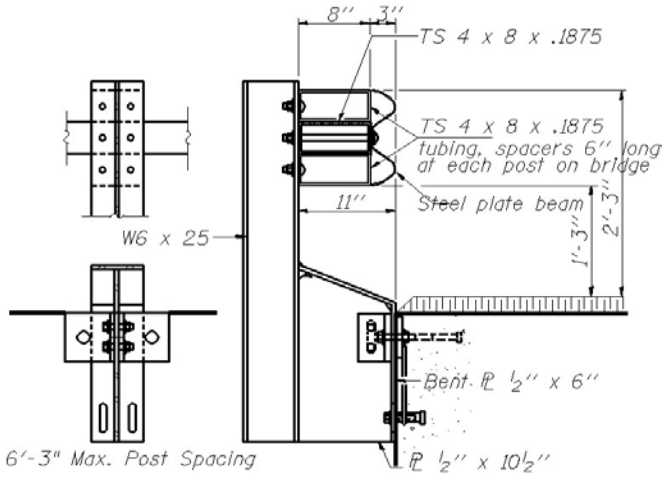

Type WT Steel Rail (Std. R-30)
Item 36A = 3
Crash Test: TL4

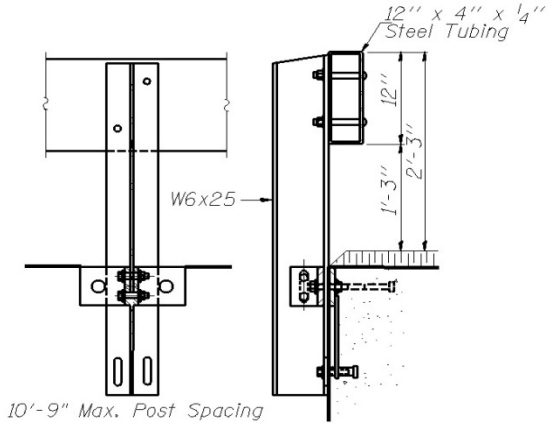

Type "S-1" Steel Rail (Std. R-23A)
Item 36A*
Not crash tested

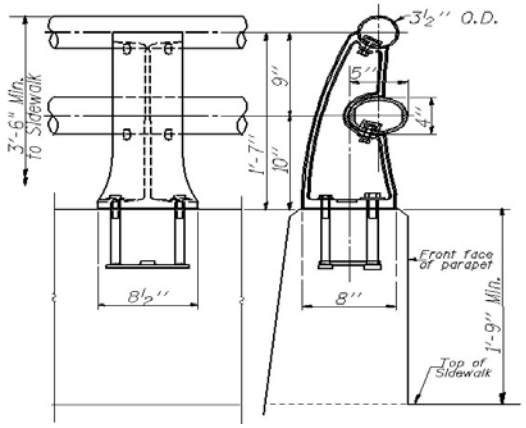

Parapet w/Type L (Alum.) or M (Steel)
Combination Rail (Std. R-20)
Item 36A*
Not crash tested

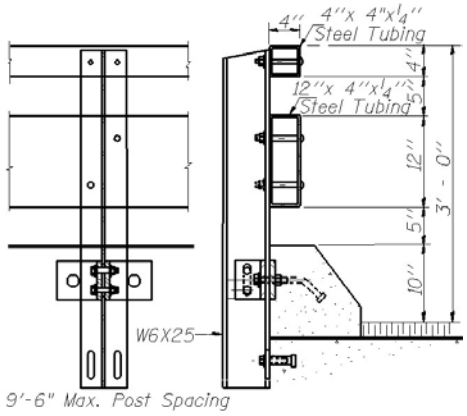

Type "T-1" Steel Rail (Std. R-24A)
Item 36A*
Not crash tested

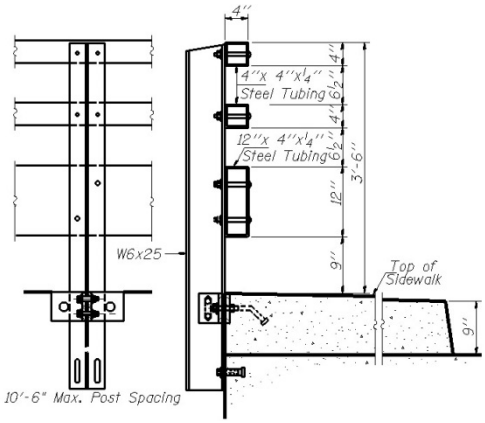

Type "TP-1" Steel Rail (Std. R-26)
Item 36A*
Not crash tested

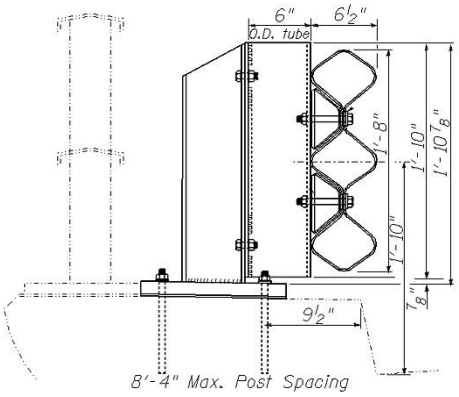

Tubular Thrie Retrofit Rail
Item 36A*
Crash test: TL3

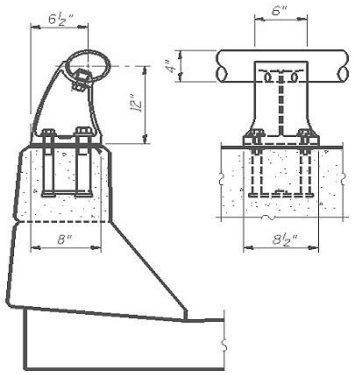

Aluminum Oval on GM Parapet (Std. R-17&17A)
Item 36A*
Not crash tested

NOTE: * Code Item 36A as "2" for bridges where current design specifications require a crash tested rail. Code as "3" when crash tested Rail is not required. (See "Item Description")

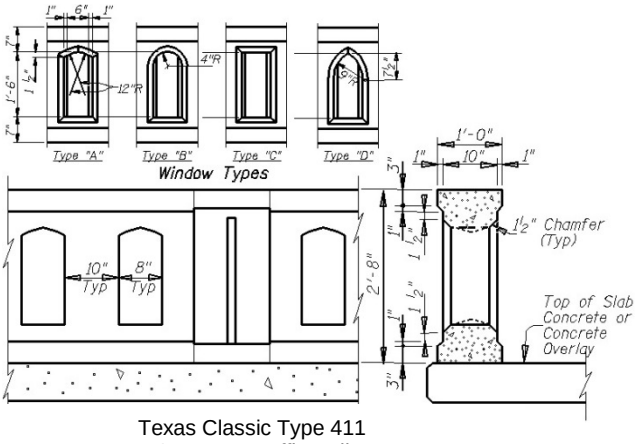

Texas Classic Type 411
Concrete Traffic Rail
Item 36A = 3
Crash test: TL2

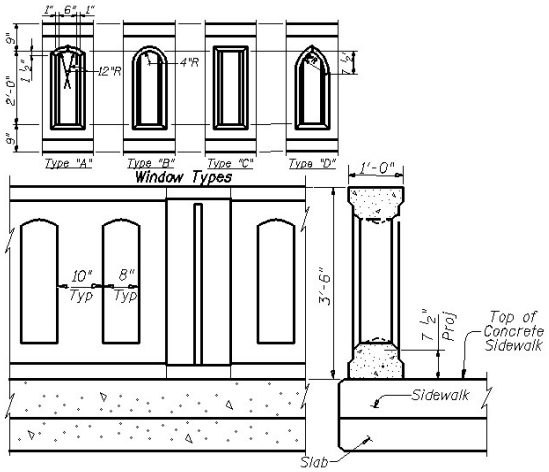

Texas Classic Type C411
Concrete Combination Rail
Item 36A = 3
Crash test: Tl2

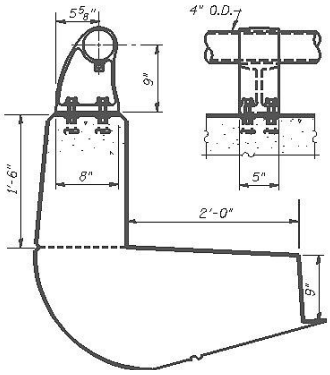

Alum./Steel Pipe on Conc. Parapet
(Std. R-10 & R-14)
Item 36A = 2

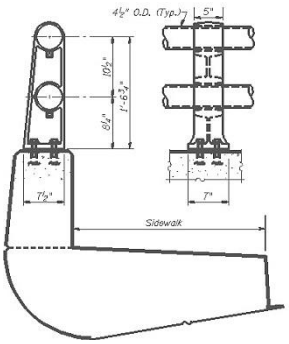

2 Alum./Steel Pipes on Conc. Parapet
w / Sidewalk (Std. R-11 & R-16)
Item 36A = 2

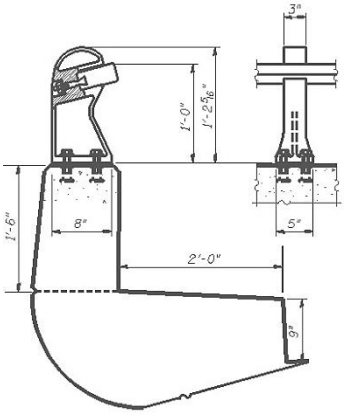

Steel Tube on Conc. Parapet
(Std. R-15)
Item 36A = 2

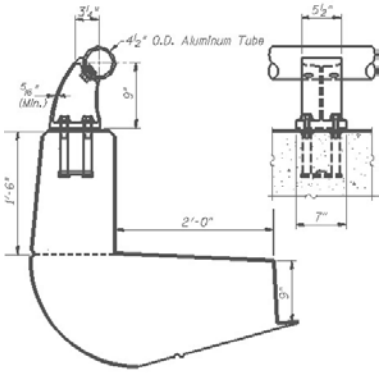

Alum. Pipe on Conc. Parapet
(Std. R-19)
Item 36A = 2

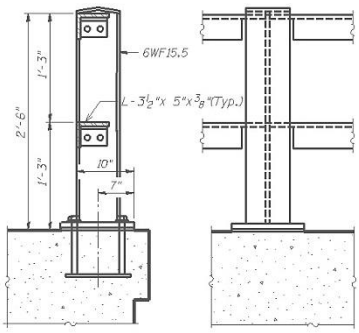

2 Steel Angles
(Std. R-1 & R-5)
Item 36A = 2

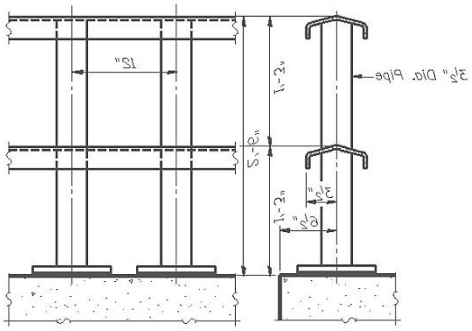

2 Steel Channels on Pipe-Post
(Std. R-2 & R-6 & R-12)
Item 36A = 2

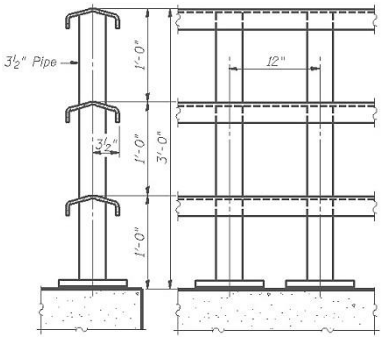

3 Steel Channels on Pipe-Post
(Std. R-3 & R-7 & R-13
Item 36A = 2

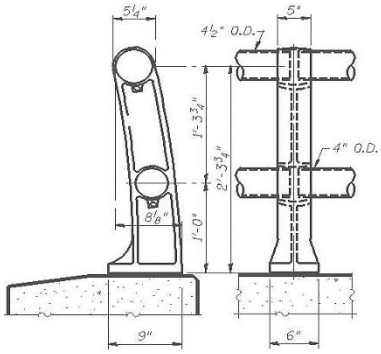

2 Aluminum Pipes
(Std. R-4 & R-8
Item 36A = 2

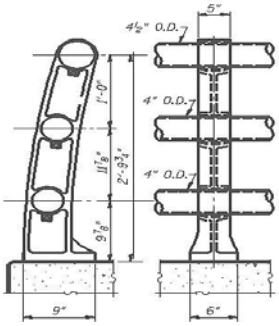

3 Aluminum Pipes
(Std. R-9)
Item 36A = 2

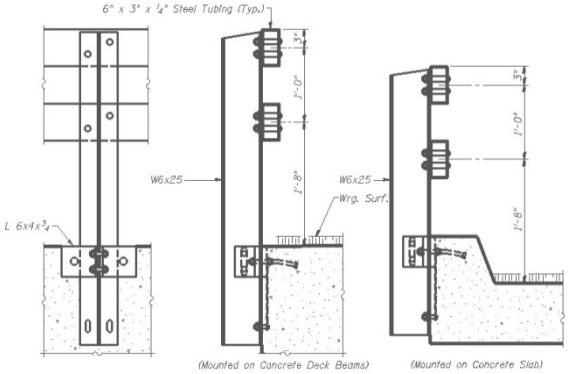

2 Steel Rect. Tubes on Side-Mounted
I-Post, Type "N" (Std. R-22)
Item 36A*

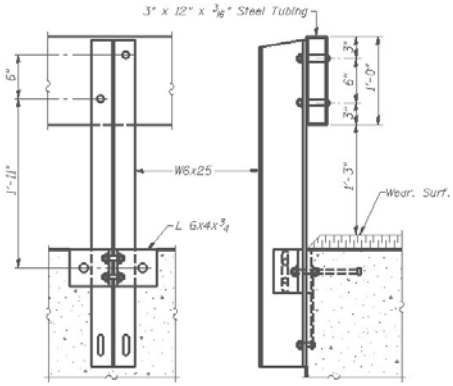

1 Steel Rect. Tubes on Side-Mounted
I-Post, Type "S" (Std. R-23)
Item 36A = 2*

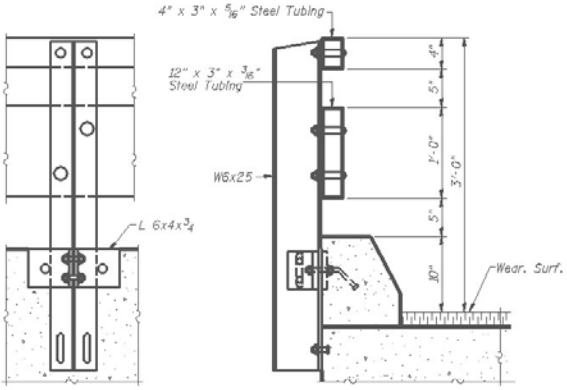

2 Steel Rect. Tubes (12x3-B, 4x3-T) on
Side-Mounted I-Post, Type "T" (Std. R-224)
Item 36A*

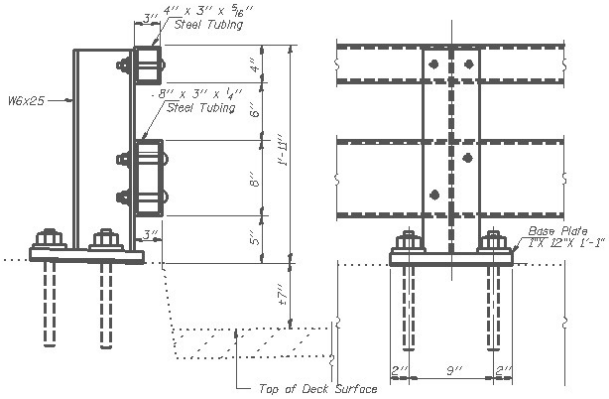

Curb Mounted Steel Retrofit Rail
(BDE Std. 2399) (Std. R-31)
Item 36A*

NOTE: * Code Item 36A as "2" for bridges where current design specifications require a crash tested rail. Code as "3" when crash tested Rail is not required. (See "Item Description")

ITEM DESCRIPTION

These items are components of the approach guardrail and are traffic safety features which are to be evaluated for their ability to safely redirect errant vehicles.

36B Transitions: The transition from approach guardrail to bridge railing requires that the approach guardrail be firmly attached to the bridge railing. It also requires that the approach guardrail be gradually stiffened as it comes closer to the bridge railing. The ends of curbs and safety walks need to be gradually tapered out or shielded.

36C Approach guardrail: The structural adequacy and compatibility of approach guardrail with transition designs should be determined. Rarely does the need for a barrier stop at the end of a bridge. Thus, an approach guardrail with adequate length and structural qualities to shield motorists from the hazards at the bridge site needs to be installed. In addition to being capable of safely redirecting an impacting vehicle, the approach guardrail must also facilitate a transition to the bridge railing that will not cause snagging or pocketing of an impacting vehicle.

36D Approach guardrail ends: As with guardrail ends in general, the ends of approach guardrails to bridges should be flared, buried, made breakaway or shielded.

Guardrails shall be evaluated in reference to the route on the bridge. Collision damage or deterioration of the elements are not considered when coding this item. The IDOT Highway Standards Manual should be referred to for satisfactory guardrail details. Acceptable guardrail design criteria are contained in the current AASHTO Guide for Selecting, Locating and Designing Traffic Barriers and in the current AASHTO Roadside Design Guide.

History is retained for these items based on each Item 90 – Inspection Date.

CODING INSTRUCTIONS

Three, one-digit fields: One for each Item 36B, 36C, and 36D.

Code	Description
N	Not applicable or safety feature not required
1	No guardrail
2	Guardrail does not meet currently acceptable IDOT standards
3	Guardrail meets currently acceptable IDOT standards

ITEM DESCRIPTION

This item identifies the type of guardrails on the structure. These are in addition to the structure railing or parapet and are continuous with the guardrails located on the approaches.

CODING INSTRUCTIONS

Two, one-digit fields.

Enter the appropriate code as selected from the list below for both sides of the structure.

Code	Description
0	None
1	Steel Plate Beam
2	Cable
3	Chain Link
4	Curved Beam
5	Woven Wire
6	Flat Plate
7	Timber
8	(Unused)
9	Any Other Type

EXAMPLES:

Type of Guardrail	Right Code (Item 36E)	Left Code (Item 36F)
Steel plate beam left and right	1	1
Steel plate beam right side only	1	0
No guardrails	0	0

ITEM DESCRIPTION

This item identifies bridges that are historically significant, either through structural design or through association with important events or circumstances.

CODING INSTRUCTIONS

The updating of this item is the responsibility of the Central Office Bureau of Program Planning, Data Management Unit (Structures), in cooperation with the Bureau of Design and Environment, Historic Structures. Any additions should be directed to either office.

A one-digit field.

Enter the appropriate code for all structures.

Code	Description
0	Bridge has been determined ineligible for inclusion on the National Register of Historic Places.
1	Bridge is listed individually on the National Register of Historic Places.
2	Bridge is listed on the National Register of Historic Places as contributing to an historic district so listed.
3	Bridge has been determined eligible for inclusion on the National Register of Historic Places (on the primary list of bridges on the Illinois Historic Bridge Survey).
4	Bridge has been determined eligible for inclusion on the National Register of Historic Places (on the alternate list of bridges on the Illinois Historic Bridge Survey).
5	Bridge is of historic interest but too recent to be eligible for inclusion on the National Register of Historic Places; will be determined eligible when it becomes 50 years old (on primary list of bridges on the Illinois Historic Bridge Survey).
6	Bridge is of historic interest but too recent to be eligible for inclusion on the National Register of Historic Places; will be determined eligible when it becomes 50 years old (on alternate the alternate list of bridges on the Illinois Historic Bridge Survey).
7	Bridge has been determined eligible for inclusion on the National Register of Historic Places and is located in a National Register Historic District but not mentioned in the District nomination.

ITEM DESCRIPTION

This item indicates whether or not the structure controls or limits navigation by crossing a navigable stream.

Navigable waterways in Illinois are defined on the following page.

CODING INSTRUCTIONS

A one-digit field. Valid entries are 1, 0 (zero), or N.

Item 38 is required when Item 42B has been coded = 5, 6, 7, or 8.

If the structure crosses any of the listed waterways below the upstream limit, use the "Yes" code to indicate that navigation control exists.

Navigable Stream	Code	FHWA Description
Yes	1	Navigation control on waterway (bridge permit required)
No	0 (zero)	No navigation control on waterway (bridge permit not required)
Not a water crossing	N	Not applicable, no waterway

NOTE: If Navigation Control (Item 38) is coded “0” (zero) or “N”, code Pier Navigation Protection (Item 111) as an “N” on the “Routine” Inspection screen. If Navigation Control (Item 38) is coded “1”, then Navigation Vertical Clearance (Item 39) and Navigation Horizontal Clearance (Item 40) must be coded.

NAVIGABLE WATERWAYS IN ILLINOIS

WATERWAY	UPSTREAM LIMIT
Big Muddy River	Murphysboro, IL, Mile 37.5
Chain of Rocks Canal	In its entirety
Des Plaines River	Lockport Lock, Mile 291.1
Illinois and Mississippi Canal	In its entirety
Illinois River	Confluence Kankakee and Des Plaines River, Mile 273.0
Kaskaskia River	Fayetteville, IL, Mile 36.2
Ohio River	In its entirety
Mississippi River	Wisconsin State Line
Wabash River	In its entirety
Rock River	Fort Atkinson, WI, Mile 162.0
Galena River	Galena, IL, Mile 4.0
Waukegan Harbor	In its entirety
Chicago River	
Main Branch	In its entirety
North Branch & North Branch Canal	To but not including Addison Street Bridge in Chicago, IL
South Branch & South Fork	In its entirety
Chicago Sanitary and Ship Canal	In its entirety
Calumet-Sag Channel	In its entirety
Little Calumet River	Confluence of Calumet and Grand Calumet River to junction with Calumet-Sag Channel
Calumet River	In its entirety
Lake Calumet	In its entirety
Grand Calumet River	To Indiana State Line

Hard Copies Uncontrolled

ITEM DESCRIPTION

This item gives the minimum vertical clearance, or "clear headway," for water traffic under a structure crossing a navigable stream. The clearance is the minimum vertical distance between the 2% flow line elevation and the lowest part of the superstructure of the main navigation span, measured at the channel-ward face of each pier. This distance is normally available from plans or permits on file in the Bureau of Bridges and Structures.

In the case of a swing or bascule bridge, the vertical clearance shall be measured with the bridge in the closed position (i.e., open to vehicular traffic). The vertical clearance of a vertical lift bridge shall be measured with the bridge in the raised or open position. Also, Item 116 (Verticle Lift Bridge, Minimum Navigation Vertical Clearance) will be generated, in part, based on this item.

CODING INSTRUCTIONS

A three-digit, recorded in whole feet and rounded down to the nearest foot.

Item 39 is required when Item 38 (Navigation Control) has been coded a "1".

For all bridges where navigation control exists (Item 38 = 1), enter into the Item 39 field the last full foot measurement (disregarding any inches or tenths of foot measurements), filling all leading positions with zeros.

EXAMPLES:

Clearance (Ft.)	Code
123.0’	123
23.7	24
Non-Navigable	Leave Blank

ITEM DESCRIPTION

This item gives the horizontal clearance for water traffic under a structure crossing a navigable stream. The clearance is the minimum horizontal distance between substructure units that bracket the main navigation channel and is measured normal to the axis of the navigation channel. This distance is normally available from plans or permits on file in the Bureau of Bridges and Structures.

CODING INSTRUCTIONS

A four-digit field, recorded in whole feet and rounded down to the nearest foot.

Item 40, Navigation Horizontal Clearance, is required when Item 38 has been coded a "1".

For all bridges where navigation control exists, enter the measurement, in feet (rounded down to the nearest whole foot), into the Item 40 data field, filling leading positions with zeros.

EXAMPLES:

Clearance (Ft.)	Code
123	123
23	23
1000	1000
Non-navigable	Leave Blank

Effective Date: 11/1/2018	ILLINOIS HIGHWAY INFORMATION SYSTEM Structure Information and Procedure Manual			
NBIS Required: Yes	Item Name	**BRIDGE STATUS**	Item No.	**41**
History Kept: Yes			Sheet	1 of 1
Structures	All			
Update Screen	Structure Status		SIMS Field Name	
SIMS Table(s)	All		Status	

ITEM DESCRIPTION

This item describes the operational status of the structure. It is one of the most essential items on the database. Since all structures remain accessible on the database, it is a key field when selecting structures that are open to public travel.

When a new Bridge Status record is added, the previous status record is automatically transferred to history. History records are accessible in the "tree", in the ISIS database. Status history records are stored in the database sequenced by their Bridge Status Dates (Item 41A). Entry of Bridge Status codes requires the entry of a valid Bridge Status Date. The ISIS database will not allow the addition of Bridge Status Dates or changing of Bridge Status Dates to a value greater than the current calendar year.

CODING INSTRUCTIONS

A one-digit field.

Code	Description
D	Structure has been removed in the field
1	Open, no restrictions
2	Open, load posted (excluding Legal Loads Only)
3	Open, posted OTAT or speed limit posted, but no posted load limit restriction
4	Open, posting/closure required, but not legally implemented
5	Open, temporary measures in place to allow traffic and having no load or speed restrictions
6	Open, temporary measures in place to allow traffic but has load or speed restrictions
7	Open, staged construction
8	Open, new structure, not yet inspected
9	New or proposed structure, not open yet
A	Closed, replacement/repairs under contract
B	Closed, replacement/repairs anticipated within the next 5 years
C	Road closed, closure not related to the condition of the structure
E	Closed, permanent closure due to the structure condition, replacement/repairs not anticipated within the next 5 years or closed for more than 5 years
Z	Structure cannot be linked to a roadway because no "open to public" roadway on/under (E.g. historical or pedestrian no longer carrying vehicular traffic)

NOTE: Bridge Status codes 1 thru 8 and A, B, C should be linked to a Key Route in the ISIS database. Bridge Status codes D, E, Z, and 9 should not be linked to a Key Route in the ISIS database. Reference Link Indicator (Item 12) for further explanation.

ITEM DESCRIPTION

This item indicates the date that the operational status of the bridge became effective. Status history records are kept by the date entered for this item. The ISIS database will not allow the addition of Bridge Status Dates or changing of Bridge Status Dates to a value greater than the current calendar year.

CODING INSTRUCTIONS

A ten-digit field (standard date format xx/xx/xxxx).

ITEM DESCRIPTION

This item provides for general comments or remarks about the operational status of a bridge. This item is used in conjunction with Bridge Status (Item 41) and Bridge Status Date (Item 41A).

CODING INSTRUCTIONS

A unlimited text field.

Enter appropriate comments beginning at the first space available using any combination of letters, numbers, symbols and spaces. Abbreviations can be used as long as they are not ambiguous.

ITEM DESCRIPTION

This item indicates the transportation facilities or features accommodated both on and under the structure.

CODING INSTRUCTIONS

Two, one-digit fields. Item 42A indicates the service on the structure and Item 42B indicates the service under the structure.

Service ON Structure		Service Under Structure	
Code	Service	Code	Service
		0	Relief for waterway
1	Highway	1	Highway
2	Railroad	2	Railroad
3	Pedestrian-Bicycle	3	Pedestrian-Bicycle
4	Highway-Railroad	4	Highway-Railroad
5	Second Level Interchange	5	Waterway
6	Third Level Interchange	6	Highway-Waterway
7	Fourth Level Interchange	7	Railroad-Waterway
8	Building or Plaza	8	Highway-Railroad-Waterway
9	Other	9	Other

EXAMPLES:

	Item 42A	Item 42B
Highway over stream	1	5
Railroad over highway & waterway	2	6
FAI 55 and FAI 70	5	1

NOTE: This item is required when adding a new structure to the ISIS database

ITEM DESCRIPTION

This item identifies the material predominantly used in construction of the main structure (superstructure). The main structure is all spans of most bridges (but the major unit only of sizable structures) or a unit of the structure with a different design and/or material from the approach spans. The major unit is usually the portion that spans the obstruction being crossed and may consist of multiple spans with only one design and material type. Refer to Appendix C, Figures 2.01 - 2.15.

CODING INSTRUCTIONS

A one-digit field.

Enter the code for the predominant material type for the main structure for all structures.

Code	Predominant Material Type
1	Concrete
2	Concrete continuous
3	Steel
4	Steel continuous
5	Prestressed concrete
6	Prestressed concrete continuous
7	Timber
8	Masonry
9	Aluminum, wrought iron or cast iron
0	Other or varied
A	Precast concrete – Not prestressed
B	Post tension concrete
C	Fiber reinforced polymer

ITEM DESCRIPTION

This item identifies the predominant type of structure used in the main structure. This includes all spans of most bridges (but the major unit only of sizable structures), or a unit of the structure with a different design and/or material from the approach spans. The major unit is usually the portion that spans the obstruction being crossed over and may consist of multiple spans with only one design and material type. Refer to Appendix C, Figures 2.01 - 2.15.

CODING INSTRUCTIONS

A two-digit field.

Enter the code for the predominant structure type of the main structure.

Code	Description	Code	Description
01	Slab	17	Movable - Swing
02	Multi-beam	18	Tunnel
03	Deck Girder (Load Path Non-Redundant System)	19	Culvert
		20	Pipeline
04	Tee Beam	21	Toll Plaza
05	Box beam - Multiple Adjacent	22	Tollway Restaurant (Overhead)
06	Box beam - Single or Spread	23	Pedestrian Overpass
07	Rigid Frame & 3-Sided Structure	24	Thru Girder
08	Orthotropic	25	Arch-Deck, Open Spandrel
09 *	Truss - Deck (non-specific)	26	Low Water Crossing
10 *	Truss - Thru & Pony (non-specific)	27	Retaining Wall
11	Arch - Deck, Filled Spandrel	28	Segmental Box Girder
12	Arch - Thru	29	Channel Beam
13	Suspension	30-70	Specific Truss Types. See descriptions on sheet 2 of 2
14	Cable Stayed (formerly Stayed Girder)		
15	Movable - Lift	91	Culvert – Rigid Frame
16	Movable – Bascule	00	Other

NOTE: Use codes 30 thru 70 in place of codes 09 and 10. Codes 09 and 10 are obsolete and are shown only for historical reference. Code “00” requires a text description to be entered.

Specific Truss Types

Code	Type
	*** Pony Trusses ***
30	Pratt Pony – Eyebar
31	Pratt Pony – Riveted
32	Pratt Half-Hip Pony
33	Truss Leg Bedstead – Eyebar
34	Truss Leg Bedstead – Riveted
35	Warren Pony
36	Modified Warren Pony
37	Quadrangular Warren (Lattice, Double Intersection Warren)
38	King Post or Queen Post
	*** Thru Trusses ***
50	Pratt Through – Eyebar
51	Pratt Through – Riveted
52	Parker – Eyebar
53	Parker – Riveted
54	Camelback – Eyebar
55	Camelback – Riveted
56	Double Intersection Pratt (Whipple)
57	Pennsylvania (Petit)
58	Continuous
59	Cantilever (Suspended Span)
	*** Deck Trusses ***
60	Pratt Deck – Eyebar
61	Pratt Deck – Riveted
62	Warren
63	Continuous
64	Cantilever (Suspended Span)
70	Other Unclassified Trusses

NOTE: Refer to Appendix C, Figures 2.13 thru 2.15, for illustrations. Code “70” requires a text description to be entered.

ITEM DESCRIPTION

This item identifies the most predominant materials used in the construction of the near / far approach spans of the structure. The ISIS database will accommodate two different bridge approach materials for each of the near and far approaches to the structure. Near and far are relative to the direction of inventory. The first approach span(s), either near or far, is identified as the span(s) nearest the roadway. The second would therefore be the span(s) nearest the main span. The approach spans are those spans that connect the main structure with the road, or the spans with design and material different from that of the main structure. Refer to Appendix C, Figures 2.01 - 2.15.

CODING INSTRUCTIONS

One-digit fields for each of two occurrences of near and far approach spans.

Only enter a code if the approach span material is different from the main structure's material (Item 43A). Otherwise, leave approach span material blank.

Leave blank if there are no approach spans.

Enter the code for the most predominant type of material both for near and far approach spans.

When either the near or far spans are of three or more different material types, enter "0" (zero) for the second occurrence to represent the material type "Varied".

Code	Material
1	Concrete
2	Concrete continuous
3	Steel
4	Steel continuous
5	Prestress concrete
6	Prestress concrete continuous
7	Timber
8	Masonry
9	Aluminum, wrought iron or cast iron
0	Other or varied
A	Precast concrete – not prestressed
B	Post tensioned concrete
C	Fiber reinforced polymer

ITEM DESCRIPTION

This item identifies the predominant structure types used for near / far approach spans. The ISIS database will accommodate two different approach spans for each of the near and far approaches to the structure. Near and far are defined in the direction of inventory. The first approach span(s), either near or far, is identified as the span(s) nearest the roadway. The second would therefore be the span(s) nearest the main span. The approach span(s) are those spans that connect the main structure with the road, or the spans with design and material different from that of the main structure. Refer to Appendix C, Figures 2.01 - 2.15.

CODING INSTRUCTIONS

A two-digit field.

Enter the code for the predominant structure type(s) both for near and far approach spans.

Code	Description	Code	Description
01	Slab	17	Movable - Swing
02	Multi-beam	18	Tunnel
03	Deck Girder (Load Path Non-Redundant System)	19	Culvert
		20	Pipeline
04	Tee Beam	21	Toll Plaza
05	Box beam - Multiple Adjacent	22	Tollway Restaurant (Overhead)
06	Box beam - Single or Spread	23	Pedestrian Overpass
07	Rigid Frame & 3-Sided Structure	24	Thru Girder
08	Orthotropic	25	Arch-Deck, Open Spandrel
09 *	Truss - Deck (non-specific)	26	Low Water Crossing
10 *	Truss - Thru & Pony (non-specific)	27	Retaining Wall
11	Arch - Deck, Filled Spandrel	28	Segmental Box Girder
12	Arch - Thru	29	Channel Beam
13	Suspension	30-70	Specific Truss Types. See descriptions on sheet 2 of 2
14	Cable Stayed (formerly Stayed Girder)		
15	Movable - Lift	91	Culvert – Rigid Frame
16	Movable - Bascule	00	Other

NOTE: Use codes 30 thru 70 in place of codes 09 and 10. Codes 09 and 10 are obsolete and are shown only for historical reference. Code “00” requires a text description to be entered.

Specific Truss Types

Code	Type
	*** Pony Trusses ***
30	Pratt Pony – Eyebar
31	Pratt Pony – Riveted
32	Pratt Half-Hip Pony
33	Truss Leg Bedstead – Eyebar
34	Truss Leg Bedstead – Riveted
35	Warren Pony
36	Modified Warren Pony
37	Quadrangular Warren (Lattice, Double Intersection Warren)
38	King Post or Queen Post
	*** Thru Trusses ***
50	Pratt Through – Eyebar
51	Pratt Through – Riveted
52	Parker – Eyebar
53	Parker – Riveted
54	Camelback – Eyebar
55	Camelback – Riveted
56	Double Intersection Pratt (Whipple)
57	Pennsylvania (Petit)
58	Continuous
59	Cantilever (Suspended Span)
	*** Deck Trusses ***
60	Pratt Deck – Eyebar
61	Pratt Deck – Riveted
62	Warren
63	Continuous
64	Cantilever (Suspended Span)
70	Other Unclassified Trusses

NOTE: Refer to Appendix C, Figures 2.13 thru 2.15, for illustrations. Code “70” requires a text description to be entered.

Effective Date: 7/1/2016	ILLINOIS HIGHWAY INFORMATION SYSTEM Structure Information and Procedure Manual			
NBIS Required: Yes	Item Name	**TOTAL NUMBER OF MAIN SPANS**	Item No.	**45**
History Kept: No			Sheet	1 of 1
Structures	All			
Update Screen	Inventory		SIMS Field Name	
SIMS Table(s)	SIMD001 & ISISSummaryStateandLocal		NbrOfSpans	

ITEM DESCRIPTION

This item indicates the total number of spans in the main structure. The main structure is all spans of most bridges and culverts (but the major unit only of sizable structures), or a unit of the structure with a different design and/or material from the approach spans. The major unit is usually the portion that spans the obstruction being crossed and may consist of multiple spans with only one design and material type.

CODING INSTRUCTIONS

A two-digit field.

For structures with 100 or more total main spans, enter “99”.

EXAMPLES:

A bridge has 3 main spans and 4 approach spans. Enter: 3

A bridge has 103 main spans. Enter: 99

ITEM DESCRIPTION

This item indicates the total number of spans in the approaches to the main structure. The approach spans are those that connect the main structure with the road, or an adjacent structure. This includes the total of both near and far approaches (See Items 44AN/AF for descriptions of near and far approaches).

CODING INSTRUCTIONS

A two-digit field.

Leave blank when there no approach spans.

EXAMPLES:

A bridge has 3 main spans, 3 near approach spans, and 3 far approach spans. Enter: 6

A bridge has 1 main span, 4 near approach spans, and 5 far approach spans. Enter: 9

NOTE: Vaulted abutments are considered to be approach slabs

ITEM DESCRIPTION

This item indicates the largest single vehicle width that can be accommodated by the KEY ROUTE ON / UNDER the structure. The purpose of this item is to give the largest available clearance for the movement of wide loads.

For structures with only one roadway on, this measurement will be the same as recorded for Total Bridge Roadway Width (Item 51) except for culverts under fill.

For those structures with only one roadway, on or under, this measurement can be no larger than the measurement recorded for Item Horizontal Clearance (Item 47A), but may be smaller if the roadway width is restricted by non-mountable vertical elements that are less than 18 inches high.

Record this measurement for all culverts, even those where the culvert is under fill.

Refer to Appendix C, Figure 4.3.

CODING INSTRUCTIONS

A four-digit field, with one decimal position.

Enter the measurement in feet and tenths of a foot.

ITEM DESCRIPTION

This item indicates the horizontal clearance of the KEY ROUTE ON / UNDER for the RIGHT / LEFT roadways of the structure. RIGHT (Item 47A) is defined as the only roadway, or the southbound / eastbound travel lanes of dual roadways. LEFT (Item 47B) is defined as the northbound / westbound travel lanes for dual roadways.

The measurement should represent the unobstructed distance (measured at right angles to the centerline) between vertical elements of the structure extending more than 18 inches from the pavement surface. The vertical elements include (but are not limited to) handrails, posts, guardrails, trusses or median barriers. For roadways beneath a structure, the measurement is between units of the substructure (or other vertical elements) or toe of slope greater than 3:1.

Refer to Appendix C, Figure 4.3.

CODING INSTRUCTIONS

A four-digit field, with one decimal position.

Enter the measurement in feet and tenths of a foot.

Enter the value for each Key Route filling leading spaces with zeros.

Leave Item 47B blank for single roadways.

For structures with more than two roadways, record the greatest in each direction.

When there are only two roadways, both in the same direction, record the main through lanes in Item 47A and the other in Item 47B.

When the roadway is on a fill over a pipe or box culvert and the culvert headwalls do not affect the flow of traffic, enter 999.9.

ITEM DESCRIPTION

This item indicates the longest span in the structure, including approaches and main structure. The span lengths are the center-to-center distances between support bearings measured along the structure roadway centerline.

For curved structures located on a horizontal curve, the spans are to be measured using the arc length along the centerline of the structure roadway. These distances can be taken from design plans and verified in the field. If design plans are not available, the measurements will have to be determined in the field.

For culverts, record the distance from center to center of culvert walls for the largest cell, measured parallel to centerline of roadway.

Refer to Appendix C, Figure 3.1.

CODING INSTRUCTIONS

A five-digit field, with one decimal position.

Enter the measurement in feet and tenths of a foot.

EXAMPLE:

The main span lengths for a three span bridge are 36.0 feet, 51.4 feet, and 36.6 feet.

Enter: 51.4

ITEM DESCRIPTION

This item indicates the overall length of roadway supported by the structure, measured along the centerline of the structure roadway. The length should be measured back to back of backwalls of abutments or from paving notch to paving notch (vaulted abutments are included).

For all structures, the preferred length measurement is the distance between backfaces of the backwalls measured along the centerline of the structure roadway. For curved structures located on a horizontal curve, record the arc length between backfaces of the backwalls measured along the centerline of the structure roadway. Box culverts are measured along the centerline, including those that are skewed, regardless of their depth below grade, along inside face to inside face of exterior walls.

This dimension can be taken from design plans and can usually be verified in the field. If design plans are not available and this dimension cannot be determined in the field, record the measurement from along the centerline of the road, measured from paving notch to paving notch.

Refer to Appendix C, Figure 3.1.

CODING INSTRUCTIONS

A six-digit field, with one decimal position.

Enter the measurement in feet and tenths of a foot.

ITEM DESCRIPTION

This item applies to sidewalks on a structure. A sidewalk is that portion of a bridge floor, usually elevated above the roadway, which is provided for the convenient and safe passage of pedestrians. Brush or safety curbs less than 18 inches in width are not to be considered sidewalks.

The sidewalk width is the clear width measured at right angles to the longitudinal centerline of the structure. This is the horizontal distance measured from the inside face of the structure railing, parapet, truss or girder to the bottom edge of the sidewalk curb or, if present, to the sidewalk face of a railing separating the sidewalk from the roadway.

"Right" is defined as the sidewalk adjacent to the traffic lanes in the southbound or eastbound directions. This is represented by Item 50A. "Left" is defined as the sidewalk adjacent to the traffic lanes in the northbound or westbound directions. This is represented by Item 50B.

Refer to Appendix C, Figure 4.1 & 8.1.

CODING INSTRUCTIONS

A three-digit field, with one decimal position.

Enter the measurement in feet and tenths of a foot.

The sidewalk width entered must be at least 1.5 feet.

Leave blank if no sidewalk exists.

ITEM DESCRIPTION

This item indicates whether or not sidewalks exist under the structure. Brush or safety curbs less than 18 inches in width are not to be considered sidewalks.

CODING INSTRUCTIONS

A one-digit field.

Enter the appropriate code for all structures.

Code	Sidewalks Under Structure
0	None
1	On one side, not separated from roadway
2	On both sides, not separated from roadway
3	On one side, separated from roadway
4	On both sides, separated from roadway

Effective Date: 11/1/2018	ILLINOIS HIGHWAY INFORMATION SYSTEM Structure Information and Procedure Manual			
NBIS Required: Yes	Item Name	**TOTAL BRIDGE ROADWAY WIDTH ON**	Item No.	**51**
History Kept: No			Sheet	1 of 1
Structures	Highway On			
Update Screen	Inventory		SIMS Field Name	
SIMS Table(s)	SIMD001 & ISISSummaryStateandLocal		BridgeRdwyWidth	

ITEM DESCRIPTION

This item records the most restrictive minimum distance between curbs or rails on the structure roadway. For structures with closed medians and usually for double decked structures, recorded data will be the sum of the most restrictive minimum distances for all roadways of the inventory routes carried on the structure*. The measurement should be exclusive of flared areas for ramps.

* Raised or non-mountable medians, open medians and barrier widths are to be excluded from the summation along with barrier-protected bicycle and equestrian lanes.

Refer to Appendix C, Figure 4.1

CODING INSTRUCTIONS

A four-digit field, with one decimal position.

Enter the measurement in feet and tenths of a foot.

Where traffic runs directly on the top slab (or wearing surface) of a culvert, code the actual roadway width (curb-to-curb or rail-to-rail). This will also apply where the fill is minimal and headwalls or parapets affect the flow of traffic.

Where the roadway is on fill carried across a culvert or structure under fill, and the headwalls or parapets do not affect the flow of traffic, enter 000.0. This is considered proper inasmuch as a filled section simply maintains the roadway cross-section.

EXAMPLE:

Total Bridge Roadway Width from below: 110.13' (Enter 110.1)

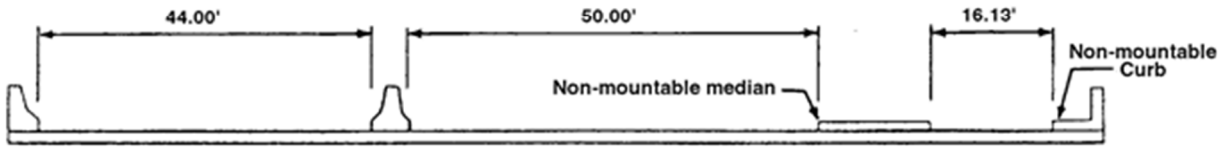

ITEM DESCRIPTION

This item indicates the out-to-out width of the deck measured at right angles to the structure centerline.

Refer to Appendix C, Figures 4.1 and 4.2.

CODING INSTRUCTIONS

A four-digit field, with one decimal position.

Enter the measurement in feet and tenths, filling unused positions with zeros.

If the structure is a through structure, the number to be entered will represent the lateral clearance between superstructure members. The measurement should be exclusive of flared areas for ramps, i.e., it should be the minimum width.

Where traffic runs directly on the top slab (or wearing surface) of a culvert, enter the out-to-out distance of headwalls measured perpendicular to the centerline of the roadway. This also applies where the fill is minimal and the headwalls or parapets of the culvert or structure under fill affect the flow of traffic.

Where the roadway is on a fill over a pipe culvert, box culvert, or structure under fill, and the culvert headwalls or parapets do not affect the flow of traffic, enter 000.0.

EXAMPLES:

Deck Width	Enter
34 ft. 6 in.	34.5
34 ft. 4 in.	34.3
34 ft. 0 in.	34.0
Pipe or box culvert/roadway not affected by headwalls	0.0
Structure not carrying a highway	0.0

ITEM DESCRIPTION

This item reports the minimum unobstructed vertical space provided for the free passage of vehicular traffic. This is the perpendicular distance between the pavement or rail surface (including shoulders) and the lowest part of the superstructure or other structure directly overhead. Refer to Appendix C, Figure 5.1.

CODING INSTRUCTIONS

A four-digit field (two digits for feet and two digits for inches).

"Right" is defined as southbound or eastbound direction of travel.
"Left" is defined as northbound or westbound direction of travel.

For undivided structures with one roadway on, report the minimum vertical clearance in the "Right" field (Item 53A) and leave the "Left" field (Item 53B) blank. Refer to Example "a".

For divided structures with two roadways on, report "Right" and "Left" vertical clearances (Items 53A and 53B respectively). Refer to Example "b".

For structures with more than two roadways on, record the right and left vertical clearances for those roadways as identified in Item 47A/B. Refer to Example "c".

For structures with no overhead restriction on, as in an open deck bridge, enter 9911 into "Right" (Item 53A). Leave the "Left" field (Item 53B) blank. Refer to Example "d".

EXAMPLES:

	Item No.		Enter
a. One Roadway On:	53A	(Min. Vert. Clear. SB/EB Rdwy.)	15 06
	53B	(Min. Vert. Clear. NB/WB Rdwy.)	BLANK

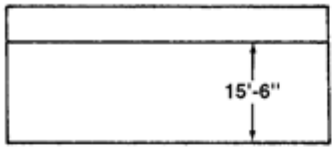

b. Two Roadways On:	53A	(Min. Vert. Clear. SB/EB Rdwy.)	14 09
	53B	(Min. Vert. Clear. NB/WB Rdwy.)	14 08

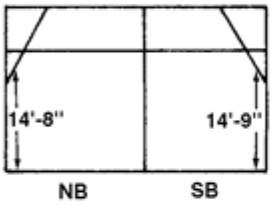

c. More than two Roadways On:	53A	(Min. Vert. Clear. SB/EB Rdwy.)	14 05
	53B	(Min. Vert. Clear. NB/WB Rdwy.)	15 00

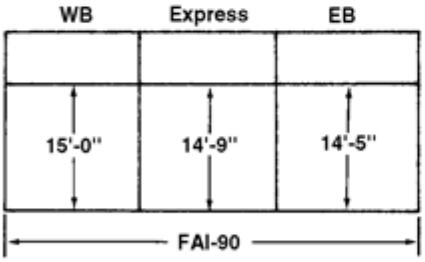

d. No Overhead Restriction:	53A	(Min. Vert. Clear. SB/EB Rdwy.)	99 11
	53B	(Min. Vert. Clear. NB/WB Rdwy.)	BLANK

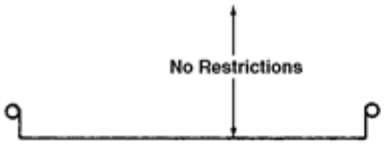

ITEM DESCRIPTION

This item indicates which feature – highway or railroad – has the least vertical underclearance.

CODING INSTRUCTIONS

DO NOT ENTER (This item is computer generated for NBIS purposes only).

All structures will have one of the following codes generated based on Minimum Vertical Highway Underclearance (Item 54B1/B2) and Railroad Vertical Underclearance (Item 54B3).

Code	Description
H	Highway beneath structure
R	Railroad beneath structure
N	Feature not a highway or railroad

ITEM DESCRIPTION

This is the minimum vertical underclearance between a roadway beneath the structure and the underside of the bridge superstructure (travel lanes only – no shoulders).

CODING INSTRUCTIONS

A four-digit field (two digits for feet and two digits for inches).

"Right" is defined as southbound or eastbound direction of travel.
"Left" is defined as northbound or westbound direction of travel.

For structures with one roadway carried by the Key Route under, report the minimum vertical underclearance in the "Right" field (Item 54B1) and leave the "Left" field (Item 54B2) blank. Refer to Appendix C, Figure 6.1.

For structures with two roadways carried by the Key Route under, report the "Right and Left" minimum vertical underclearances (Items 54B1, 54B2, respectively). Refer to Appendix C, Figure 6.1.

For structures with a highway/railroad combination under, report the vertical underclearance(s) for the highway in Items 54B1/B2 and report the measurement for the railroad in Item 54B3. Refer to Appendix C, Figure 6.1.

For structures with more than two roadways carried by the Key Route under, report the Right and Left minimum underclearances for those roadways as identified in Items 47A/B.

Effective Date: 7/1/2016	ILLINOIS HIGHWAY INFORMATION SYSTEM Structure Information and Procedure Manual			
NBIS Required: Yes	Item Name	**RAILROAD VERT. UNDERCLEARANCE**	Item No.	**54B3**
History Kept: No			Sheet	1 of 1
Structures	Railroad Under			
Update Screen	Inventory		SIMS Field Name	
SIMS Table(s)	SIMD001 & ISISSummaryStateandLocal		RRVertUnderclear	

ITEM DESCRIPTION

This is the minimum vertical underclearance between a railroad beneath the structure and the underside of the bridge superstructure.

Refer to Appendix C, Figure 6.1.

CODING INSTRUCTIONS

A four-digit field (two digits for feet and two digits for inches).

Leave blank when structure does not pass over a railroad.

EXAMPLE:

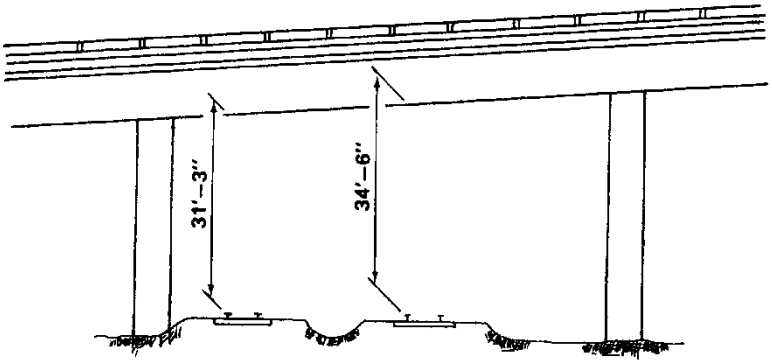

Railroad 31' 3" beneath structure Enter: 31 03

ITEM DESCRIPTION

This item indicates which feature – highway or railroad – has the least lateral underclearance.

CODING INSTRUCTIONS

DO NOT ENTER (This item is computer generated for NBIS purposes only).

All structures will have one of the following codes generated based on Minimum Lateral Highway Underclearance Right (Item 55B), Railroad Lateral Underclearance (Item 55B1), and Minimum Lateral Underclearance Left (Item 56).

Code	Description
H	Highway beneath structure
R	Railroad beneath structure
N	Feature not a highway or railroad

Effective Date: 7/1/2016	ILLINOIS HIGHWAY INFORMATION SYSTEM Structure Information and Procedure Manual			
NBIS Required: Yes	Item Name	MIN. LAT. HWY. UNDERCLEAR. (RIGHT)	Item No.	**55B**
History Kept: No			Sheet	1 of 1
Structures	Highway Under			
Update Screen	Key Routes		SIMS Field Name	
SIMS Table(s)	SIMD004 & ISISSummaryStateandLocal		MinLatHwyUnderclearUn	

ITEM DESCRIPTION

This item indicates the minimum lateral clearance beneath a structure measured from the right edge of the pavement to the nearest substructure unit such as a pier or abutment, or to the toe of a slope steeper than 3:1. This item applies only to structures over a highway.

Measure the minimum lateral clearance from the right pavement edge for both directions of travel and record the lesser measurement. In the case of dual roadways carried by the Key Route, measure the right (outside) clearances for both roadways and record the lesser measurement.

The right edge of the pavement is the right edge of that portion of the roadway provided for (and intended to support) the passage of through traffic. Pavement does not include shoulders.

For highways with curb and gutter, measure from the face of the curb to the nearest obstruction.

For structures over a highway-railroad combination, describe the highway in Item 55B and record the railroad clearance in Item 55B1.

Refer to Appendix C, Figure 9.1.

CODING INSTRUCTIONS

A three-digit field, with one decimal position.

Enter the measurement in feet and tenths of a foot.

For those pavements that are immediately adjacent to a subway wall (no curb), record 0.0.

For those clearances greater than 99.8 feet, code 99.8.

EXAMPLES:

Lateral Underclearance Right	Enter
12.6 feet	12.6
2.6 feet	2.6
No clearance	0.0

Effective Date: 7/1/2016	ILLINOIS HIGHWAY INFORMATION SYSTEM Structure Information and Procedure Manual			
NBIS Required: Yes	Item Name	**RAILROAD LATERAL UNDERCLEAR.**	Item No.	**55B1**
History Kept: No			Sheet	1 of 1
Structures	Railroad Under			
Update Screen	Inventory		SIMS Field Name	
SIMS Table(s)	SIMD001 & ISISSummaryStateandLocal		RRLatUnderclear	

ITEM DESCRIPTION

This item indicates the minimum lateral clearance for a railroad passing beneath a structure. The clearance is measured from the centerline of the tracks to the nearest substructure unit, such as a pier or abutment, to the toe of a slope greater than 3:1.

Refer to Appendix C, Figure 9.1.

CODING INSTRUCTIONS

A three-digit field, with one decimal position.

Enter the measurement in feet and tenths of a foot.

For those clearances greater than 99.8 feet, code 99.8.

Leave blank when structure does not pass over a railroad.

EXAMPLE:

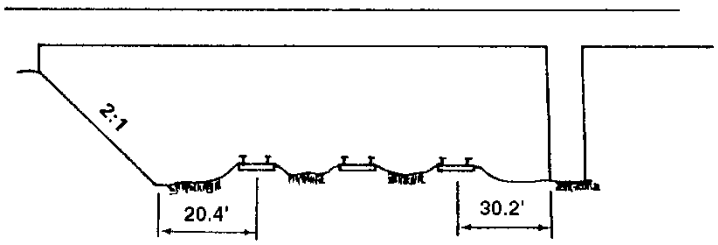

Minimum lateral clearance from the centerline of the tracks is 20.4’

Enter: 20.4

ITEM DESCRIPTION

This item indicates the minimum lateral clearance beneath a structure measured from the left (median) edge of the pavement to the nearest substructure unit or median barrier. This item applies only to a structure over a divided highway or an undivided highway with center obstruction separating the traffic lanes.

The clearance is to be measured from the left (median) edge of the pavement to the nearest substructure unit or median barrier for each direction of travel. Report the smaller distance to the nearest tenth of a foot.

The left edge of the pavement is the left edge of that portion of the roadway provided for (and intended to support) the passage of through traffic. The pavement does not include shoulders.

For highways with curb and gutter, measure from the face of the curb to the nearest obstruction.

Refer to Appendix C, Figure 9.1.

CODING INSTRUCTIONS

A three-digit field, with one decimal position.

Enter the measurement in feet and tenths of a foot.

For those clearances greater than 99.8 feet, code 99.8.

EXAMPLE:

A bridge crossing a divided highway has lateral underclearances, on the left, of 5.6 feet and 4.3 feet.

Enter: 4.3

Evaluation is based on the physical condition of the materials included in the deck, superstructure, substructure and culvert components. The condition evaluation of channels and channel protection is based on the natural elements in the channel. Condition ratings are intended to provide a basis for assessing the safety of in-service bridges and not as a direct determinant for bridge maintenance.

Condition ratings are used to describe existing, in-place bridge components as compared to their as-built conditions. These components include: Deck, Superstructure, Substructure, Channel and Channel Protection and Culverts. Typically, condition codes are properly used when they provide an overall characterization of the general condition of the entire component being rated. Conversely, they are improperly used if they attempt to describe localized or nominally occurring instances of deterioration or disrepair. Condition ratings “5” thru “8” should be rated for the overall condition of the bridge. A condition rating of “4” can be caused by deterioration on one primary member. However, the inspector should recognize, for locally occurring deficiencies as well as for general conditions, that greater than 10% section loss in a critical area of a primary member does not necessarily drop the condition rating of the bridge to a “4” or lower. For steel members where it can be shown that the Inventory Rating Factor (Item 66B1) is equal to or greater than 1.000 and the area has been cleaned and painted to stop further corrosion, the condition rating may be raised to reflect the overall condition of the structure when approved by the Bureau of Bridges and Structures.

The Bureau of Bridges and Structures or a Licensed Structural Engineer is to be notified to perform an evaluation of the load carrying capacity of the bridge when condition ratings warrant in accordance with the requirements of IDOT bridge rating policy. Condition ratings assigned during a Routine NBIS Inspection should take into account structural condition findings of a recent load rating evaluation, especially if that evaluation was performed since the last NBIS inspection. Inspection notes that outline these findings should be included with the structure information documents used by the inspector. However, the fact that a bridge was designed for less than current legal loads has no influence on condition ratings. Therefore, the load carrying capacity, in and of itself, is not to be used in evaluating condition items.

The condition ratings of portions of bridges that are being supported, replaced or eliminated by temporary measures are based on the actual condition as if the temporary measures were not present. However, when a temporary member has been in place more than five (5) years, for the purposes of the NBIS inspection, it is considered as a permanent integral part of the structure and will be accounted for in the condition rating.

Bridge inspections should be accomplished using the Bridge Inspector's Reference Manual (Publication FHWA NHI 16-013) and the most recent edition of the AASHTO Manual for Bridge Evaluation as reference. Findings of the NBIS Inspections must be recorded and coded on the Bridge Inspection Report (Form BBS-BIR).

History is retained in the ISIS for each of these items based on each Inspection Date (Item 90).

CODING INSTRUCTIONS

The following general condition ratings should be used as the authoritative guide for assigning condition ratings when evaluating Items 58, 59, 60, 61 and 62. The specific component condition rating guides on the following pages, along with the Bridge Inspector's Reference Manual may be used to assist the inspector in recognizing and evaluating deficiencies which may be present in decks, superstructures, substructures or culverts.

Code	Description
N	**Not Applicable**
9	**Excellent Condition (New)**
8	**Very Good Condition** - No problems noted.
7	**Good Condition** - Some minor problems (No section loss).
6	**Satisfactory Condition** - Structural elements show some minor deterioration (Up to 2% section loss on primary member(s) in critical areas).
5	**Fair Condition** - All primary structural elements are sound but may have minor section loss, cracking, spalling or scour (Up to 10% section loss on primary member(s)).
4	**Poor Condition** - Advanced section loss, deterioration, spalling or scour (Up to 30% section loss on primary member(s) in critical areas). A drop in Item 59, 60 or 62 to a rating of 4 or lower or Item 58 to a 3 or lower will require a load rating inspection by the Bureau of Bridges and Structure to determine any change in the inventory and operating ratings, items 66 and 64.
3	**Serious Condition** - Loss of section, deterioration, spalling or scour have seriously affected primary structural components (Up to 50% section loss on primary member(s)). Local failures are possible. Fatigue cracks in steel or shear cracks in concrete may be present.
2	**Critical Condition** - Advanced deterioration of primary structural elements (Greater than 50% section loss on primary member(s) in critical areas). Fatigue cracks in steel or shear cracks in concrete may be present or scour may have removed substructure support. It may be necessary to close the bridge until corrective action is taken. When a bridge component is appraised at this level, a special inspection of that component is required at intervals not to exceed 6 months as directed by the Bureau of Bridges and Structures.***** The Bureau of Bridges and Structures must be notified immediately.
1	**"Imminent" Failure Condition** - Major deterioration or section loss present in critical structural components or obvious vertical or horizontal movement affecting structure stability. Bridge is closed to traffic but corrective action may put it back in service with load restrictions.
0	**Failed Condition** - Out of service; beyond corrective action.

NOTES: A description must be included in the "Inspection (Routine NBIS) Remarks" (Item 90B) concerning the reason for a rating of 4 or less.

Revising a condition rating to or from “2”, “3” or “4” by the inspector indicates that a structural evaluation should be requested for a final determination of whether application or relaxation of loading restrictions is warranted. This evaluation must be performed by or reviewed by the Bureau of Bridges and Structures. The inspector should also be aware of a load rating performed within 5 years prior to the inspection and apply the condition ratings with due consideration of the findings of that evaluation.

Percent section loss on primary members is based on the design parameters of the member.

ITEM DESCRIPTION

This item describes the overall condition rating of the Deck.

Concrete decks should be inspected for cracking, scaling, spalling, leaching, potholing, delamination, and full or partial depth failures. Aggregate pop-outs on bare concrete decks should be considered primarily as a wearing surface and riding quality problem with only a minor effect on the Deck Condition Rating. Steel grid decks should be inspected for broken welds or grids, section loss, and growth of filled grids from corrosion. Timber decks should be inspected for splitting, crushing, fastener failure, and deterioration from rot.

The condition evaluation should be primarily based on the appearance of the underside of the deck (deck soffit). The condition of the wearing surface, parapets / bridge railings, curbs, median, sidewalks, drain system, light standards and expansion joints may be recorded on the inspection form. These component conditions should not be considered in the overall deck condition.

On bridges where the deck is integral with the superstructure, the superstructure condition rating may be affected by the deck condition rating. However, the deck condition rating will not be affected by the superstructure condition rating, except as noted for slab and PPC deck beam bridges. The deck carries the wheel loads to the superstructure beams. The superstructure, in conjunction with the deck carries the loads to the substructure units. The stress planes are perpendicular to each other. It should be noted, however, that the superstructure condition rating differs from the deck condition rating in that it is more related to the ability to carry overall vehicular loading rather than the individual wheel loads for which the deck is designed. For example, an integral deck may have instances of full depth failures which have little or no effect on the ability of the superstructure to perform its function.

Needed repairs should be recorded on designated forms and reported to appropriate personnel in accordance with the policies of the maintaining agency.

History is retained for this item based on each Inspection Date (Item 90).

“Section loss” refers to the loss of section properties used for design.

CODING INSTRUCTIONS

A one-digit field.

Rate and code the structure's condition in accordance with the ”Condition Ratings - General” described on the preceding pages (Item No. 58-62 discussion, pages 1 of 2 and 2 of 2).

The Condition Rating Guides for Specific Deck Types on the following pages (pages 3 of 5 through 5 of 5) are intended only to provide some assistance in recognizing typical kinds of deck deficiencies and relating them to an appropriate Deck Condition Rating.

All Deck Types will use the same coding guidelines as described below for deck rating codes of N, 9, 1, and 0 (zero).

FOR ALL DECK MATERIAL TYPES

CONDITION RATING GUIDES FOR CODES N, 9, 1 AND 0

Code	Description
N	Culverts, structures without decks (e.g. Items 43A/B coded A07, 107, or 111) or structures under 2 feet or more of fill.
9	New deck.
1	Deck in “imminent failure” condition requiring bridge closure or temporary measures to allow structure to remain open.
0	Deck that has failed and is beyond repair, requiring bridge closure.

Condition Rating Guides for codes 2 through 8 pertaining to specific deck material types are described on the following pages.

CONDITION RATING GUIDES FOR SPECIFIC DECK MATERIALS

CONCRETE BRIDGE DECKS

General Note: For slab and precast prestressed concrete (PPC) deck beam bridges, the deck condition rating (Item 58) shall be rated the same as the superstructure (Item 59) using the superstructure criteria, except for PPC deck beam with 4” or more of reinforced concrete overlay, in which case the overlay shall be rated as the deck.

Code	Description
8	VERY GOOD. Transverse cracks < 0.06” at > 15’ intervals may be present but no spalling, scaling, pop-outs or delamination.
7	GOOD. Some transverse cracks < 0.06” at > 5’ intervals over the majority of the deck, light scaling (less than 1/4" depth) or pop-outs may be present, no spalling.
6	SATISFACTORY. Transverse cracks < 0.06” at < 5’ or > 0.06” at > 5’ intervals over a majority of the deck, isolated longitudinal cracks, spalls and delaminations may be present on up to 5% of the deck riding surface or soffit area, up to 10% of the deck soffit may be spalled, delaminated, and map cracked.
5	FAIR. Transverse cracks > 0.06” at < 5’ intervals with or without leaching in the majority of the deck, longitudinal cracks < 0.06” in majority of deck, spalls and delaminations may be present on up to 10% of the deck surface or soffit area, up to 25% of the deck surface or soffit may be spalled, delaminated and map cracked, up to 10% loss of primary reinforcement in any 6’ bay length.
4	POOR. Longitudinal cracks > 0.06” in majority of deck, spalls and delaminations may be present on up to 25% of the deck surface or soffit area, up to 50% of the deck surface or soffit may be spalled, delaminated and map cracked, up to 30% loss of primary reinforcement in any 6’ bay length.
3	SERIOUS. Condition is similar to the description for a condition rating of “4”, though more extensive full depth failures are evident to the point that wheel loads may need restricted or temporary measures implemented.
2	CRITICAL. Full depth failures needing patching over much of the deck on a regular basis which requires special inspections to keep the bridge open, possibly with reduced load limits, temporary measures may be needed to allow continued use of the structure. The Bureau of Bridges and Structures shall be notified immediately.

NOTE: For codes N, 9, 1 and 0 (zero) Condition Rating Guides pertaining to all deck material types, refer to Item No. 58, Page 2 of 5.

CONDITION RATING GUIDES FOR SPECIFIC DECK MATERIALS

STEEL BRIDGE DECK

Code	Description
8	VERY GOOD. Tightly secured to floor system with no rust.
7	GOOD. Sound connections with minor rusting, no cracked welds.
6	SATISFACTORY. Considerable rusting with indications of initial section loss, sound connections with isolated cracked welds and/or isolated broken grids.
5	FAIR. Heavy rusting with areas of up to 10% section loss in a 6 foot wide bay, isolated loose connections, numerous cracked welds and/or broken grids, grid sections may be uplifting in isolated areas without danger of breaking loose.
4	POOR. Heavy rusting resulting in considerable section loss up to 30% in a 6 foot wide bay and numerous holes in grid or deck structural elements resulting in many welds cracked and/or grids broken, uplifting of grid sections may be occurring throughout deck with danger of breaking loose.
3	SERIOUS. Severe or critical signs of structural distress are visible to the point where vehicular loads may need to be restricted. Sections have broken loose and are being repaired occasionally.
2	CRITICAL. Same as condition rating of “3” but special inspections are required to allow bridge to remain open, possibly with reduced load limits. The Bureau of Bridges and Structures shall be notified immediately.

NOTE: For codes N, 9, 1 and 0 (zero) Condition Rating Guides pertinent to all deck material types, refer to Item No. 58, Page 2 of 5.

CONDITION RATING GUIDES FOR SPECIFIC DECK MATERIALS

TIMBER BRIDGE DECK

Code	Description
8	VERY GOOD. No crushing, rotting, or splitting, tightly secured to floor system.
7	GOOD. Minor cracking, checking or splitting with a few loose planks.
6	SATISFACTORY. A minor number of rotted or crushed planks in need of replacement, many planks cracked or split, many loose planks, fire damage limited to surface scorching with insignificant section loss, some wet areas noted.
5	FAIR. Numerous planks cracked, split, some non-adjacent planks rotted, or crushed and in need of replacement, many planks may be loose, fire damage limited to surface charring with minor section loss.
4	POOR. Majority of the planks are rotted, crushed, and/or split, necessitating replacement of the entire deck, fire damage may be present, with >10% section loss to a significant area of the deck.
3	SERIOUS. Severe signs of structural distress are visible to the point where vehicular loads may have to be restricted, major fire damage which will substantially reduce the sectional area of the plank.
2	CRITICAL. Advanced deterioration with partial deck failure to the point where a special inspection at reduced intervals is necessary to allow the structure to remain open, possibly with reduced load limits. The Bureau of Bridges and Structures shall be notified immediately.

NOTE: For codes N, 9, 1 and 0 (zero) Condition Rating Guides pertinent to all deck material types, refer to Item No. 58, Page 2 of 5.

ITEM DESCRIPTION

This item describes the physical condition of all structural members of the Superstructure as it affects the structural sufficiency of the bridge.

The structural members should be inspected for signs of distress which may include cracking, deterioration, section loss, and malfunction and misalignment of bearings.

On bridges where the deck is integral with the superstructure, the superstructure condition rating may be affected by the deck condition rating. However, the deck condition rating will not be affected by the superstructure condition rating, except as noted for slab and PPC deck beam bridges. The deck carries the wheel loads to the superstructure beams. The superstructure, in conjunction with the deck carries the loads to the substructure units. The stress planes are perpendicular to each other. It should be noted, however, that the superstructure condition rating differs from the deck condition rating in that it is more related to the ability to carry overall vehicular loading rather than the individual wheel loads for which the deck is designed. For example, an integral deck may have instances of full depth failures which have little or no effect on the ability of the superstructure to perform its function.

Fracture critical components should receive careful attention because failure could lead to collapse of a significant portion of the bridge. The Superstructure Condition Rating should not be higher than the Fracture Critical Appraisal Rating (Item 93A1) though it may be lower.

Needed repairs should be recorded on designated forms and reported to appropriate personnel in accordance with the policies of the maintaining agency.

History is retained for this item based on each Inspection Date (Item 90).

“Section loss” refers to the loss of section properties used for design.

CODING INSTRUCTIONS

A one-digit field.

Rate and code the structure's condition in accordance with the ”Condition Ratings - General” described on the preceding pages (Item No. 58-62 discussion, pages 1 of 3 and 2 of 3).

The Condition Rating Guides for Specific Superstructure types on the following pages (pages 3 of 9 through 9 of 9) are intended to provide some assistance in recognizing typical kinds of superstructure deficiencies and relating them to an appropriate Superstructure Condition Rating.

All Superstructure Types will use the same coding guidelines as described below for superstructure rating codes of N, 9, 1, and 0 (zero).

FOR ALL SUPERSTRUCTURE MATERIAL TYPES

CONDITION RATING GUIDES FOR CODES N, 9, 1 AND 0

Code	Description
N	Culvert.
9	New superstructure.
1	Superstructure in “imminent failure” condition requiring bridge closure or temporary measures to allow structure to remain open.
0	Superstructure that has failed and is beyond repair, requiring bridge closure.

Condition Rating Guides for codes 2 through 8 pertaining to specific superstructure material types are described on the following pages.

CONDITION RATING GUIDES FOR SPECIFIC SUPERSTRUCTURE MATERIALS

STEEL SUPERSTRUCTURE

Code	Description
8	VERY GOOD. No visible rust.
7	GOOD. Some rust may be present but without any section loss.
6	SATISFACTORY. Initial section loss (minor pitting, scaling, or flaking) up to 2% section loss.
5	FAIR. Initial section loss up to 10% in critical areas, fatigue or out-of-plane bending cracks may be present in secondary members, arrested fatigue cracks may be present in primary members, hinges may be showing minor corrosion problems, anchor bolt(s) may be missing.
4	POOR. Section loss up to 30% in critical area, fatigue or out-of-plane bending cracks may be present in primary members, previously arrested fatigue cracks propagating beyond arresting holes in primary members, fatigue cracks in secondary members throughout the bridge, anchor bolts or pintles broken on rocker bearings with an offset of ½" or more between the rocker and the bearing or sole plates.
3	SERIOUS. Advanced section loss up to 50%, extensive perpendicular to stress fatigue or out of plane bending cracks in primary members.
2	CRITICAL. Severe section loss over 50% requires special inspections, temporary supports or repairs may be required to remain open to traffic. The Bureau of Bridges and Structures shall be notified immediately.

REINFORCED CONCRETE SUPERSTRUCTURE

Code	Description
8	VERY GOOD. No significant defects, very minor shrinkage cracks, surface scaling, spalling or pop-outs which do not expose reinforcing steel.
7	GOOD. Isolated non-structural cracks up to 0.03", minor pop-outs or spalls without exposed primary reinforcing steel, stirrups may be exposed in a few locations.
6	SATISFACTORY. Extensive non-structural cracks up to 0.06", isolated hairline structural cracks, spalls and delaminations may be present on up to 10% of a beams cross section or 6' width of a slab with exposed primary reinforcement with surface rust only, up to 20% of a beam cross section or 6' width of a slab may be map cracked, spalled and delaminated. Spalls and delaminations up to 5% on the sides of a beam cross section.
5	FAIR. Non-structural cracks greater than 0.06", structural cracks up to 0.03", spalling with section loss of reinforcing steel up to 10% in a beam or 6' width of slab, up to 10% of compression surface area spalled or delaminated in a beam cross section or 6' width of slab. Up to 10% section loss of the concrete cross section.

NOTE: For codes N, 9, 1 and 0 condition rating guides pertaining to all superstructure material types, refer to Item 59 (Sheet 2 of 9).

CONDITION RATING GUIDES FOR SPECIFIC SUPERSTRUCTURE MATERIALS

REINFORCED CONCRETE SUPERSTRUCTURE (cont'd)

Code	Description
4	POOR. Flexural or shear cracks up to 0.06", primary reinforcing steel exposed with section loss up to 30% in a 6' width of slab or in a beam cross section, up to 50% of the compression surface area spalled or delaminated, channel beams spalled or delaminated up to 30% section loss of the beam concrete cross section around the bottom primary reinforcement steel but not within 4' of beam ends.
3	SERIOUS. Primary reinforcing steel exposed with section loss up to 50% on a 6' width for slabs or cross section for beams, up to 100% section loss of compression surface area in a 6' width of slab or beam cross section, up to 50% section loss of the concrete cross section of a beam, channel beams spalled or delaminated around the bottom primary reinforcement steel within 4' of beam ends.
2	CRITICAL. Similar to the description for a condition rating of "3" although more extensive with over 50% loss of reinforcing steel, channel beams fully delaminated or spalled at ends with broken stirrups, requires special feature inspections, temporary support or repairs may be required to remain open to traffic. The Bureau of Bridges and Structures shall be notified immediately.

Note: Refer to the general discussion of Superstructure Condition (Item No. 59, page 1 of 5) for further discussion of the potential effect of an integral deck on superstructure evaluation.

PRESTRESSED CONCRETE DECK BEAMS

General Notes: Prestressing strands, reinforcement bars or wire mesh should be considered exposed in areas where the concrete appears to be deteriorated or is unsound (delaminated condition) to the level of the strands, bars or mesh. Strands adjacent to longitudinal cracks shall be interpreted as being exposed longitudinal cracks may be caused by water freezing in the voids and splitting the concrete in the longitudinal direction. Patches are considered delaminated. The dimensions stated below relate to the width of the cross section of the beams. The "end quarters of span" do not include the beam ends (up to 3').

Code	Description
8	VERY GOOD. No notable problems.
7	GOOD. No beams with prestressing strands, stirrup reinforcement bars or wire mesh exposed. Moderate cracking and leakage may be present in keyways, but no differential movement occurring between deck beams.
6	SATISFACTORY. *Center half of span*: No beams with prestressing strands, stirrup reinforcement or wire mesh bars exposed, no longitudinal cracking or spalling along the bottom of the beams. *End quarters of span*: No more than 2 strands or 3" of stirrup reinforcement bars or 3" of wire mesh exposed in the bottom of any beam. Larger widths of wire mesh may be exposed due to inadequate concrete cover occurring during manufacturing (up to ½" cover), keyway cracking may be evident with wide spread leakage, but beams are still fully acting together.

NOTE: For codes N, 9, 1 and 0 condition rating guides pertaining to all superstructure material types, refer to Item 59 (Sheet 2 of 9).

CONDITION RATING GUIDES FOR SPECIFIC SUPERSTRUCTURE MATERIALS

PRESTRESSED CONCRETE DECK BEAMS (cont'd)

Code	Description
5	FAIR. *Center half of span*: No more than 2 strands or 3" of stirrup reinforcement bars or 3" of wire mesh exposed in any beam, longitudinal cracking or spalling limited to one edge with no other defects exposing reinforcement, wire mesh or strands. *End quarters of span*: No more than 4 strands or 6" of stirrup reinforcement bars or 6" of wire mesh exposed in the bottom of any beam, no more than one longitudinal crack in any beam without any other defect. *Beam ends (up to 3')*: Prestressed strands, stirrup reinforcement bars or wire mesh exposed up to fullwidth of any beam bottom. Larger widths of wire mesh may be exposed due to inadequate concrete cover occurring during manufacturing (up to ½" cover), keyway cracking with extensive leakage and evidence that beams are beginning to act independently of each other.
4	POOR. *Center half of span*: Prestressed strands, stirrup reinforcement bars or wire mesh exposed for no more than ⅓ the width of any beam bottom, spalling or delamination of the top of the beams down to the top reinforcement, one longitudinal crack in the bottom of any beam. *End quarters of span*: Prestressed strands, stirrup reinforcement bars or wire mesh exposed for no more than ½ the width of any beam bottom, two longitudinal cracks in the bottom of any beam *Beam ends (up to 3')*: Prestressed strands, stirrup reinforcement bars or wire mesh exposed up to full width of adjacent beam bottom with no exposed strands in the second layer of strands and sound concrete above the bottom layer. Larger width of wire mesh exposed and actively corroding due to inadequate concrete cover occurring during manufacturing (up to ½" cover), keyway has failed with groups of beams acting independently of others.
3	SERIOUS. *Center half of span*: Prestressing strands, stirrup reinforcement bars or wire mesh exposed for no more than ½ the width of any beam bottom, two longitudinal cracks in the bottom of any beam, combinations of deterioration in condition rating "4". *End quarters of span*: Prestressing strands, stirrup reinforcement bars or wire mesh exposed for no more than ⅔ the width of any beam bottom, combination of deterioration in condition rating "4". *Beam ends (up to 3')*: Prestressed strands, stirrup reinforcement bars or wire mesh exposed full width of adjacent beam bottom with exposed strands in the second layer of strands or unsound concrete above the bottom layer. Keyways have failed causing a group of 3 or 4 beams to act independently from others.

NOTE: For codes N, 9, 1 and 0 condition rating guides pertaining to all superstructure material types, refer to Item 59 (Sheet 2 of 9).

CONDITION RATING GUIDES FOR SPECIFIC SUPERSTRUCTURE MATERIALS

PRESTRESSED CONCRETE DECK BEAMS (cont'd)

Code	Description
2	CRITICAL. Similar to but more serious and extensive than what is described for a condition rating of "3", transverse cracks full width in the bottom of the beams, keyways have failed causing 1 or 2 beams to act independently from others. Structural elements that are judged to be in critical condition must receive special inspections in order for the structure to remain open to traffic. The Bureau of Bridges and Structures shall be notified immediately.

PRESTRESSED CONCRETE "I" BEAMS

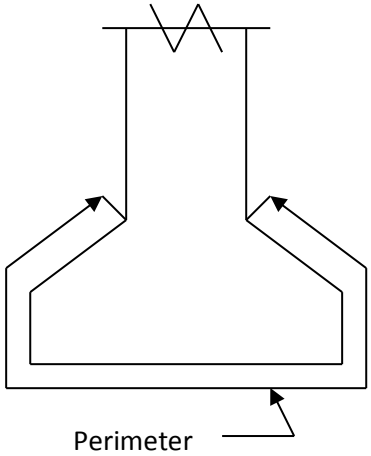

General Notes: Prestressing strands, reinforcement bars or wire mesh should be considered exposed in areas where the concrete appears to be deteriorated or is unsound (delaminated condition) to the level of the strands, bars or mesh. Strands adjacent to longitudinal cracks shall be interpreted as being exposed. Patches are considered delaminated. The dimensions stated below relate to the perimeter of the bottom flange of the beams. The "end quarters of span" do not include the beam ends (up to 3').

Code	Description
8	VERY GOOD. No notable problems.
7	GOOD. No beams with prestressing strands, stirrup reinforcement bars or wire mesh exposed. Minor shrinkage or release cracks may be present. Minor map cracking at drains with sound concrete.

NOTE: For codes N, 9, 1 and 0 condition rating guides pertaining to all superstructure material types, refer to Item 59 (Sheet 2 of 9).

CONDITION RATING GUIDES FOR SPECIFIC SUPERSTRUCTURE MATERIALS

PRESTRESSED CONCRETE "I" BEAMS (cont'd)

Code	Description
6	SATISFACTORY. *Center half of span*: No beams with prestressing strands, stirrup reinforcement exposed. *End quarters of span*: No more than 2 strands or 3" of stirrup reinforcement bars exposed in the bottom of any beam. *Beam ends (up to 3')*: Prestressed strands or stirrup reinforcement bars exposed up to ½ the perimeter of the bottom flange of any beam. Larger width of stirrups may be exposed due to inadequate concrete cover occurring during manufacturing (up to ½" cover). Webs may be spalled with exposed stirrups and only surface rust.
5	FAIR. *Center half of span*: Prestressed strands or stirrup reinforcement bars exposed for no more than ¼ the perimeter of the bottom flange of any beam. *End quarters of span*: Prestressed strands or stirrup reinforcement bars exposed for no more than ⅓ the perimeter of the bottom flange of any beam. *Beam ends (up to 3')*: Prestressed strands or stirrup reinforcement bars exposed from ½ to full perimeter of the bottom flange of any beam. Larger areas of stirrup may be exposed due to inadequate concrete cover that occurs during manufacturing (up to ½" cover). Webs may be spalled with exposed stirrups minor section loss.
4	POOR. *Center half of span*: Prestressed strands or stirrup reinforcement bars exposed for no more than ⅔ the perimeter of the bottom flange of any beam. *End quarters of span*: Prestressed strands or stirrup reinforcement bars exposed up to full perimeter of the bottom flange of any beam. No strands are exposed inside the exterior perimeter of strands. *Beam ends (up to 3')*: Prestressed strands or stirrup reinforcement bars exposed full perimeter of the bottom flange of any beam with some strands exposed inside the exterior perimeter of strands. Webs are spalled with exposed stirrups with up to 30% section loss at ends of beams.

NOTE: For codes N, 9, 1 and 0 condition rating guides pertaining to all superstructure material types, refer to Item 59 (Sheet 2 of 9).

CONDITION RATING GUIDES FOR SPECIFIC SUPERSTRUCTURE MATERIALS

PRESTRESSED CONCRETE "I" BEAMS (cont'd)

Code	Description
3	SERIOUS. *Center half of span*: Prestressed strands or stirrup reinforcement bars exposed up to full perimeter of the bottom flange of any beam. No strands are exposed inside the exterior perimeter of strands. *End quarters of span*: Prestressing strands, stirrup reinforcement bars exposed for the full perimeter of the bottom flange of any beam with some strands exposed inside the exterior perimeter of strands. Hairline transverse cracks in bottom of beams or hairline vertical/diagonal shear cracks in beam webs may be developing.
2	CRITICAL. Similar to but more serious and extensive than what is described for a condition rating of "3". Structural elements that are judged to be in critical condition must receive special inspections in order for the structure to remain open to traffic. Measurable shear or transverse cracks. The Bureau of Bridges and Structures shall be notified immediately.

NOTE: For codes N, 9, 1 and 0 condition rating guides pertaining to all superstructure material types, refer to Item 59 (Sheet 2 of 9).

CONDITION RATING GUIDES FOR SPECIFIC SUPERSTRUCTURE MATERIALS

TIMBER SUPERSTRUCTURE

Code	Description
8	VERY GOOD. May have only very minor defects in beams or stringers at non-critical locations.
7	GOOD. Minor insignificant decay, cracking, or splitting of beams or stringers.
6	SATISFACTORY. Some decay, cracking, or splitting of beams or stringers may be occurring near the main load carrying portions. Fire damage limited to surface scorching with no significant section loss.
5	FAIR. Moderate decay up to 10%, cracking, or splitting of beams or stringers but no significant effect in critical areas such as beam ends and mid-span. Fire damage limited to surface charring with minor section loss up to10%.
4	POOR. Extensive decay, cracking, splitting or crushing of beams or stringers, or fire damage with main load carrying portions affected. Section loss up to 30%.
3	SERIOUS. Severe decay, cracking, splitting or crushing of beams or stringers, or fire damage with major section loss up to 50% in critical load carrying portions of members. A further progression of problems noted for a condition rating of “4”.
2	CRITICAL. Beam ends may be crushed or split with settlement of deck. Any further deterioration of problems noted for a condition rating of “3”. Section loss over 50%, special feature inspection is required to allow bridge to remain open. The Bureau of Bridges and Structures shall be notified immediately.

NOTE: For codes N, 9, 1 and 0 condition rating guides pertaining to all superstructure material types, refer to Item 59 (Sheet 2 of 9).

Effective Date: 7/1/2016	ILLINOIS HIGHWAY INFORMATION SYSTEM Structure Information and Procedure Manual			
NBIS Required: No	Item Name	**LAST PAINT DATE**	Item No.	**59A**
History Kept: Yes			Sheet	1 of 1
Structures	Highway On			
Update Screen	Routine		SIMS Field Name	
SIMS Table(s)	SIMD002 & ISISSummaryStateandLocal		PaintDate	

ITEM DESCRIPTION

This item records the date the bridge was last painted.

If an entry is made for this item, an entry is also required for Last Paint Type (Item 59B).

History is retained for this item based on each Inspection Date (Item 90).

CODING INSTRUCTIONS

A ten-digit field (standard date format xx/xx/xxxx).

Effective Date: 7/1/2016	ILLINOIS HIGHWAY INFORMATION SYSTEM Structure Information and Procedure Manual			
NBIS Required: No	Item Name	**LAST PAINT TYPE**	Item No.	**59B**
History Kept: Yes			Sheet	1 of 2
Structures	Highway On			
Update Screen	Routine		SIMS Field Name	
SIMS Table(s)	SIMD002 & ISISSummaryStateandLocal		PaintType	

ITEM DESCRIPTION

This item indicates the type of paint used for the time it was painted as indicated in Last Paint Date (Item 59A). This item is required if an entry is made for Last Paint Date (Item 59A).

History is retained for this item based on each Inspection Date (Item 90).

CODING INSTRUCTIONS

Four, two-digit fields:

1st & 2nd position - most extensively used paint system
3rd & 4th position - second system
5th & 6th position - third system
7th & 8th position - handrail

Enter any combination of the codes listed below in the sequence listed above.

Code	Paint Type
A	Shop applied Basic Lead Silico Chromate or Red Lead primer/Maroon first field coat and interstate green* final coat.
B	Shop applied Basic Lead Silico Chromate or Red Lead primer/Aluminum first and final field coats.
C	Combination of A and B.
D	Field applied Basic Lead Silico Chromate or Red Lead primer/Maroon and interstate green* 2nd and final coats.
E	Field applied Basic Lead Silico Chromate or Red Lead primer/Aluminum 2nd and final coats.
F	Combination of D and E.
G	Shop applied Zinc Silicate and Field applied Vinyl paint system.
H	Field applied Zinc Silicate and Vinyl paint system.
I	Aluminum Epoxy Mastic Primer and Vinyl or Urethane overcoat system.

* Or any final color chosen by the district.

CODE	PAINT TYPE
J	Iron Oxide/Zinc Oxide Primer and Alkyd top coats.
K	Iron Oxide/Zinc Oxide Primer and Aluminum Phenolic top coats.
L	Miscellaneous Alkyd systems.
M	Miscellaneous Epoxy systems.
N	Miscellaneous Urethane primer systems.
O	Base weathering Steel.
P	Other coating systems.
Q	Other protective systems.
R	No protection system.
S	Shop applied Zinc Silicate and Field applied Acrylic paint system.
T	Field applied Zinc Silicate and Acrylic paint system.
U	Field applied Aluminum Epoxy and Acrylic.
V	Galvanized
W	Shop applied Metallizing & Field applied Polyurethane
X	Shop applied Zinc Silicate & Field applied Polyurethane
Y	Shop applied Organic Zinc and Field applied Epoxy & Polyurethane
Z	Field applied Organic Zinc, Epoxy & Polyurethane
AA	Field applied Moisture Cured Urethane
AB	Shop applied Organic Zinc, Epoxy, & Urethane
AC	Shop applied Metallizing (No top coat)
AD	Field applied Metallizing (No top coat)
AE	Shop applied Metallizing (Clear top coat)
AF	Shop applied Metallizing (Epoxy & Acrylic)
AG	Shop applied Metallizing (Epoxy & Urethane)

Hard Copies Uncontrolled

ITEM DESCRIPTION

This item indicates the type of utilities that are attached to the structure. Up to three utilities can be recorded.

History is retained for this item based on each Inspection Date (Item 90).

CODING INSTRUCTIONS

Three, one-digit fields, the first two of which may contain any code except "C".

Unused fields may be left blank only if the first utility field is not “N”. If first position is “N”, code the remaining two utility fields “N”.

Code	Utility
0	Stream Gauge Conduit
1	Natural Gas
2	Petroleum
3	Water Line
4	Steam
5	Storm Water
6	Sewer
7	Telephone
8	Cable
9	Electric
A	Fiber Optics
B	Other
C	Combination
N	Not Applicable

ITEM DESCRIPTION

This item describes the physical condition of piers, abutments, piles, fenders, footings or other substructure components as it affects the structural sufficiency of the bridge.

The substructure components should be inspected for visible signs of distress, including evidence of cracking, section loss, settlement, misalignment, scour, collision damage and corrosion. These components include stems, breastwalls, crash walls, columns & piles, caps, bearing seats, backwalls, wingwalls, fender systems and paint.

The rating given to Item 93B1 (Underwater Appraisal Rating) may have a significant effect on this item if scour or subsurface deterioration has substantially affected the overall condition of the substructure. The rating assigned to this item should be no greater than that given to Item 93B1. Structures not having a separate underwater inspection must have the underwater condition incorporated into the Routine inspection. The rating for Item 113 (Scour Critical Evaluation) is unrelated unless significant scour has actually occurred at the bridge. When observed scour requires a rating of 3 or less for Item 60, the rating for Item 113 shal be re-evaluated.

Integral-abutment wingwalls to the first construction or expansion joint shall be included in the evaluation. For non-integral superstructure and substructure units, the substructure shall be considered as the portion below the bearings except that it shall also include abutment backwalls. For structures where the substructure and superstructure are integral, the substructure shall be considered as the portion of the bridge below the intersection of the bottom of the superstructure with the vertical column or wall face.

If the substructure has Steel Fracture Critical Members, the rating of the substructure should be no higher than the rating for types E1, E2, E3 or E4 of Item 92A1 as recorded in Item 93A1.

Needed repairs should be recorded on designated forms and reported to appropriate personnel in accordance with the policies of the maintaining agency.

History is retained for this item based on each Inspection Date (Item 90).

NOTE: “Section loss” refers to the loss of section properties used for design.

CODING INSTRUCTIONS

A one-digit field.

Rate and code the structure's condition in accordance with the ”Condition Ratings - General” described on the preceding pages (Item No. 58-62 discussion, pages 1 of 2 and 2 of 2).

The Condition Rating Guides for Specific Substructure Types on the following pages (pages 3 of 5 through 5 of 5) are intended to provide some assistance in recognizing typical kinds of substructure deficiencies and relating them to an appropriate Substructure Condition Rating.

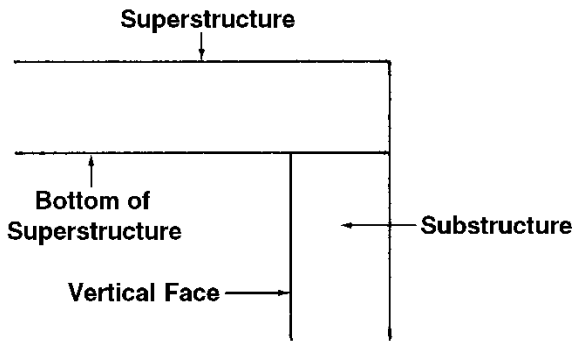

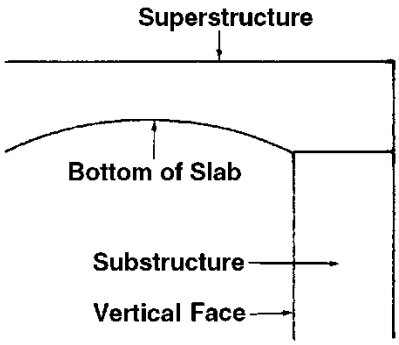

All Substructure Types will use the same coding guidelines as described below for substructure rating codes of N, 9, 1, and 0 (zero).

FOR ALL SUBSTRUCTURE MATERIAL TYPES

CONDITION RATING GUIDES FOR CODES N, 9, 1 AND 0

Code	Description
N	Culvert.
9	New substructure.
1	Substructure in “imminent failure” condition requiring bridge closure or temporary measures to allow structure to remain open.
0	Substructure that has failed and is beyond repair, requiring bridge closure.

Condition Rating Guides for codes 2 through 8 pertaining to specific substructure material types are described on the following pages.

CONDITION RATING GUIDES FOR SPECIFIC SUBSTRUCTURE MATERIALS

CONCRETE OR MASONRY SUBSTRUCTURE

Code	Description
8	VERY GOOD. No significant defects. Shrinkage cracks, very light surface scaling, spalling or pop-outs which do not expose reinforcing steel. Insignificant damage caused by drift or collision with no misalignment and no corrective action warranted.
7	GOOD. Minor cracking, spalls or scaling with few incidences of exposed reinforcement with only surface rust. Minor scour may have occurred at the foundation.
6	SATISFACTORY. Moderate deterioration or disintegration, spalls, cracking and leaching on concrete or masonry units with up to 2% section loss or loss of bearing area. Shallow, local scour may have occurred near foundations with exposure of top of pile supported footings, less than 2' deep scour around pile bents. No exposed piles.
5	FAIR. Large portions of concrete or masonry units are spalled, scaled, or delaminated with exposed reinforcing steel up to 10% loss of concrete (horizontal cross section), up to 10% loss of reinforcement steel, extensive map cracking with leaching, spread footings with no undermining on soil and up to 5% undermining on rock, <u>less than 2' of exposed piles or seal coat below pile supported footings</u>, less than 6' deep scour around pile bents, up to 10% section loss of bearing seats or piles.
4	POOR. Active cracks in concrete and masonry units that indicate a reduction in the substructure unit's capacity to support the superstructure loads, up to 30% section loss of bearing seat(s) or pile(s), section loss of primary steel reinforcement up to 30%. Section loss of concrete up to 30%, undermining of spread footing which may be affecting the stability of the unit but no significant settlement has yet occurred, worst condition or combination of deterioration stated in condition rating "5". If the rating of this item is due to scour, the rating for Item 113 shall be re-evaluated.
3	SERIOUS. Section losses up to 50%, loss of bearing seat area to cause more than 2" drop, adjacent column ties are broken causing the vertical reinforcement to be ineffective, severe scour or undermining of footings affecting the stability of the unit with some settlement of the substructure. If the rating of this item is due to scour, the rating for Item 113 shall be re-evaluated.
2	CRITICAL. Conditions worse than condition rating of "3", section loss greater than 50%, special feature inspection is required to allow bridge to remain open, measurable lateral or vertical movement, unstable structures. The Bureau of Bridges and Structures shall be notified immediately. If the rating of this item is due to scour, the rating for Item 113 shall be re-evaluated.

NOTE: For codes N, 9, 1 and 0 condition rating guides pertaining to all substructure material types, refer to Item 60 (Sheet 2 of 5).

Hard Copies Uncontrolled

CONDITION RATING GUIDES FOR SPECIFIC SUBSTRUCTURE MATERIALS

STEEL SUBSTRUCTURE

Code	Description
8	VERY GOOD. No significant defects, very minor damage caused by drift or collision with no misalignment.
7	GOOD. Some light surface rust, minor scour may have occurred.
6	SATISFACTORY. Up to 2% loss of steel section due to rust pitting may have occurred, but no effect on structural integrity of the substructure unit, shallow, local scour may have occurred at foundation with exposure of top of pile caps. No exposed piles.
5	FAIR. Corrosion has caused moderate section loss up to 10% but overall ability of substructure to support the structure is unaffected, cracks may be present in non-critical areas, fatigue cracks in primary members have been arrested, spread footings exposed with no undermining on soil and up to 5% undermining on rock, less than 2' of piles or seal coat exposed below pile supported footings, less than 6' deep scour around piles with pile caps installed above the ground, no misalignment or settlement noted.
4	POOR. Section loss up to 30% in critical areas of main steel members, localized buckling or cracks may be present in critical areas of primary members, undermining of spread footing which may be affecting the stability of the unit but no significant settlement has yet occurred, worse condition or combination of deterioration stated in condition rating "5". If the rating of this item is due to scour, the rating for Item 113 shall be re-evaluated.
3	SERIOUS. Section losses up to 50%, severe scour or undermining of footings affecting the stability of the unit with some settlement of the substructure. If the rating of this item is due to scour, the rating for Item 113 shall be re-evaluated.
2	CRITICAL. Conditions worse than a condition rating of "3", section loss greater than 50%, special feature inspection is required to allow bridge to remain open, measurable lateral or vertical movement, unstable structures. The Bureau of Bridges and Structures shall be notified immediately. If the rating of this item is due to scour, the rating for Item 113 shall be re-evaluated.

NOTE: For codes N, 9, 1 and 0 condition rating guides pertaining to all substructure material types, refer to Item 60 (Sheet 2 of 5).

Hard Copies Uncontrolled

CONDITION RATING GUIDES FOR SPECIFIC SUBSTRUCTURE MATERIALS

TIMBER SUBSTRUCTURE

Code	Description
8	VERY GOOD. No significant defects, insignificant damage caused by drift or collision, scour is insignificant.
7	GOOD. Insignificant decay, cracking or splitting of timber, minor scour may have occurred.
6	SATISFACTORY. Surface decay, cracking, splitting of timber, fire damage limited to surface scorching of timber with up to 2% section loss, shallow, local scour may have occurred near foundations. No exposed piles.
5	FAIR. Minor decay, cracking or splitting of timber, a few secondary members may need replacement but primary members are performing their function as designed with section loss up to 10%, fire damage limited to surface charring of timber with minor section loss up to 10%, spread footings exposed with no undermining on soil and up to 5% undermining on rock, less than 2' of piles or seal coat exposed below pile supported footings, less than 6' deep scour around pile bents with pile caps installed above the ground, no misalignment or settlement noted.
4	POOR. Serious decay, cracking, splitting or crushing of primary timber with section loss up to 30%, fire damage with section loss up to 30% that has reduced the load carrying capacity of the substructure, exposure of timber piles greater than 2' as a result of erosion, reducing the penetration, undermining of spread footing which may be affecting the stability of the unit but no significant settlement has yet occurred, worst condition or combination of deterioration stated in condition rating "5". If the rating of this item is due to scour, the rating for Item 113 shall be re-evaluated.
3	SERIOUS. Section losses up to 50%, severe scour or undermining of footings affecting the stability of the unit with some settlement of the substructure. If the rating of this item is due to scour, the rating for Item 113 shall be re-evaluated.
2	CRITICAL. Conditions worse than a condition rating of "3", section loss greater than 50%, special feature inspection is required to allow bridge to remain open, measurable lateral or vertical movement, unstable structures. The Bureau of Bridges and Structures shall be notified immediately. If the rating of this item is due to scour, the rating for Item 113 shall be re-evaluated.

NOTE: For codes N, 9, 1 and 0 condition rating guides pertaining to all substructure material types, refer to Item 60 (Sheet 2 of 5).

Hard Copies Uncontrolled

Effective Date: 11/1/2018	ILLINOIS HIGHWAY INFORMATION SYSTEM Structure Information and Procedure Manual			
NBIS Required: No	Item Name	**SUBSTRUCTURE MATERIAL**	Item No.	**60A/B**
History Kept: No			Sheet	1 of 1
Structures	All			
Update Screen	Inventory		SIMS Field Name	
SIMS Table(s)	SIMD001		SubstrMaterialCode	

ITEM DESCRIPTION

This item records the most critical substructure supporting material in the abutments and piers. Item 60A is used for abutment material types. Item 60B is used for pier material types. For both items, the most critical material type should be coded.

When existing plans are available, the determination of critical material may be made using those plans. However, this item should be verified in the field. If existing plans are not available, the substructure material should be field verified. Only the portions of the substructure unit that are exposed to air at low water elevation should be considered in this determination. For example, substructure units with concrete footings on unrepaired timber piles are coded “2” (timber) if existing plans show timber piles or the piles are exposed, but “5” (concrete) if the existing plans are not available and piles are not exposed when field verified.

CODING INSTRUCTIONS

A two-digit field.

Enter the appropriate code for the abutment material (Item 60A) and pier material (Item 60B).

Code	Description
1	Timber with repairs made
2	Timber
3	Steel
4	Masonry
5	Concrete
6	Exposed Steel (Not encased or buried)
7	Metal Shell
8	Precast Concrete (Not piles)
N	Not Applicable

EXAMPLES:	Item 60A	Item 60B
One unrepaired timber abutment, one steel abutment, one unrepaired timber pier, one steel pier, and one masonry pier.	2	2
Concrete abutments with masonry fascia, one pier with five timber piles, of which three piles have been repaired.	5	1
Culverts	N	N
3-Sided structure on concrete footings.	5	N

NOTE: The term “supporting” refers to the material in the substructure that provides the structural basis for the substructure. For example, Steel piles encased in reinforced concrete, the code for this item would be “3” for steel, exposed or unexposed.

ITEM DESCRIPTION

This item describes the physical conditions associated with the flow of water through the bridge such as stream stability and the condition of the channel, riprap, slope protection, or stream control devices including spur dikes.

The inspector should be particularly concerned with visible signs of excessive water velocity that may affect undermining of slope protection or footings, erosion of banks, and realignment of the stream that may result in immediate or potential problems.

Needed repairs should be recorded on designated forms and reported to appropriate personnel in accordance with the policies of the maintaining agency.

History is retained for this item based on each Inspection Date (Item 90).

CODING INSTRUCTIONS

Rate and enter the condition code in accordance with the previously described Condition Ratings – General and the following descriptive codes:

Code	Description
N	NOT APPLICABLE. Use when bridge is not over a waterway.
9	EXCELLENT. There are no noteworthy deficiencies that affect the condition of the channel.
8	VERY GOOD. Banks are protected or well vegetated. River control devices such as spur dikes and embankment protection are not required or are in a stable condition.
7	GOOD. Bank protection is in need of minor repairs. River control devices and embankment protection have a little minor damage. Banks and/or channel may have minor amounts of drift not affecting the waterway opening.
6	SATISFACTORY. Bank is beginning to slump. River control devices and embankment protection have widespread minor damage. There is minor streambed movement evident. Debris is restricting the waterway slightly.
5	FAIR. Bank protection is being eroded. River control devices and/or embankment have major damage. Trees and brush restrict the channel.

Code	Description (cont'd)
4	POOR. Bank and embankment protection is severely undermined. River control devices have severe damage. Deposits of debris in the waterways are severely restricting the opening.
3	SERIOUS. Bank protection has failed. River control devices have been destroyed. Streambed aggradation, degradation or lateral movement has changed the waterway to now threaten the bridge and/or approach roadway.
2	CRITICAL. The waterway has changed to the extent the bridge is near a state of collapse.
1	IMMINENT FAILURE. Bridge closed. Corrective action may return bridge to light service.
0	FAILED. Bridge closed. Replacement necessary.

Hard Copies Uncontrolled

ITEM DESCRIPTION

This item evaluates the alignment, settlement, structural condition, scour, and other items associated with culverts. The rating code is intended to be an overall condition evaluation of the culvert. Wingwalls integral with the culvert to the first wingwall construction or expansion joint shall be included in the evaluation. For a detailed discussion regarding the inspection and rating of culverts, consult the *Bridge Inspector's Reference Manual* (Publication FHWA NHI 03-002).

Needed repairs should be recorded on designated forms and reported to appropriate personnel in accordance with the policies of the maintaining agency.

History is retained for this item based on each Inspection Date (Item 90).

CODING INSTRUCTIONS

Rigid Frame 3 sided structures shall not be treated as a culvert.

A one-digit field.

Code "N" in Item 58 (Deck), Item 59 (Superstructure), and Item 60 (Substructure) for all culverts.

Rate and enter the condition code in accordance with the previously described Condition Ratings – General and the following descriptive codes:

Code	Description
N	NOT APPLICABLE. Use when structure is not a culvert.
9	EXCELLENT. New with no deficiencies
8	VERY GOOD. No noticeable or noteworthy deficiencies which affect the condition of the culvert, insignificant scrape marks caused by drift.
7	GOOD. Isolated non-structural cracks up to .03”, light scaling, and insignificant spalling which does not expose reinforcing steel, metal culverts have a smooth symmetrical curvature with superficial corrosion and no pitting, insignificant damage caused by drift with no misalignment and not requiring corrective action, some minor scour has occurred near curtain walls, wingwalls, or pipes.
6	SATISFACTORY. Extensive non-structural cracks up to .06” with some leaching over the majority of the top slab, spalls and delaminations may be present on up to 10% in a 6’ width of the concrete or masonry walls or slabs exposing primary reinforcement with surface rust only, up to 20% of the surface area of walls and slabs may be map cracked, spalled and delaminated. Metal culverts have a smooth curvature, non-symmetrical shape, minor corrosion or measurable pitting. Local minor scour at curtain walls, wingwalls, or pipes.

CONDITION RATING GUIDES FOR CULVERTS

Code	Description
5	FAIR. Non-structural cracking with leaching at < 5' intervals over the majority of the slab or wall surfaces, structural cracks < 0.03" in walls or slabs, section loss of primary reinforcement up to 10% in the top slab in a 6' width, up to 10% of compression surface area spalled or delaminated on top slabs in a 6' width (tension areas may be totally spalled), up to 10% section loss of concrete or rebar in a 10' width of wall, up to 10% section loss of concrete or reinforcement steel in a 10' width of bottom slab. Metal culverts have significant distorsion and deflection in no more than one section, or significant corrosion or deep pitting with up to 10% average section loss in a 10' width, minor settlement or misalignment, noticeable scour or erosion at curtain walls, wingwalls, or pipes without undermining.
4	POOR. Structural cracks in top slab up to 0.06", structural cracks in walls up to 0.125", section loss of primary reinforcement up to 30% in the top slab in a 6' width, up to 30% of compression surface area spalled or delaminated on top slabs in a 6' width (tension areas may be totally spalled), up to 30% section loss of concrete or rebar in a 10' width of wall, up to 30% section loss of concrete or reinforcement steel in a 10' width of bottom slab. Metal culverts have significant distortion and deflection on more than one section, extensive corrosion or deep pitting throughout with up to 30% section loss in a 10' width, considerable settlement or misalignment, considerable scour or erosion at curtain walls, wingwalls or pipes with undermining.
3	SERIOUS. Any worse or combined condition described in condition rating "4", up to 50% loss, metal culverts have extreme distortion and deflection in one section (collapse), extensive corrosion, or deep pitting with scattered perforations, severe movement or differential settlement of the segments, or loss of fill. Holes may exist in walls or slabs. Integral wingwalls nearly severed from culvert. Severe undermining of curtain walls, wingwalls or pipes.
2	CRITICAL. Large areas of slab or walls spalled full depth near traffic, large area of reinforcement losses greater than 50% near traffic, metal culverts have extreme distortion and deflection throughout with extensive perforations due to corrosion, integral wingwalls collapsed, severe settlement of roadway due to loss of fill, section of culvert may have failed and can no longer support embankment, complete undermining of curtain walls and pipes, special feature inspection will be required to keep the structure open with possible load restrictions. The Bureau of Bridges and Structures shall be notified immediately.
1	IMMINENT FAILURE. Bridge closed. Corrective action may return bridge to light service.
0	FAILED. Bridge closed. Replacement necessary.

ITEM DESCRIPTION

This item indicates the number of individual cells or openings included in the culvert being reported. This item should match Total Number of Main Spans (Item 45).

CODING INSTRUCTIONS

A one-digit field.

Enter 2 for a double box culvert, 3 for a triple pipe culvert, etc.

Leave blank if not applicable.

Effective Date: 7/1/2016	ILLINOIS HIGHWAY INFORMATION SYSTEM Structure Information and Procedure Manual			
NBIS Required: No	Item Name	**CULVERT CELL WIDTH**	Item No.	**62B**
History Kept: No			Sheet	1 of 1
Structures	Highway On			
Update Screen	Inventory		SIMS Field Name	
SIMS Table(s)	SIMD001 & ISISSummaryStateandLocal		CulvCellsWidth	

ITEM DESCRIPTION

This item indicates the horizontal width of individual cells or openings in the culvert for the purpose of determining capacity.

This measurement is the width of an individual cell within the culvert measured perpendicular to the sidewalls. It should be entered in feet and rounded to the nearest tenth of a foot.

If more than one width exists, record the predominant width.

Record the variable conditions in Bridge Remarks – General (Item 8A1).

CODING INSTRUCTIONS

A three-digit field, with one decimal position.

Code the measurement in feet and rounded to the nearest tenth (.1) of a foot.

Leave blank if not applicable.

ITEM DESCRIPTION

This item indicates the vertical height of individual cells or openings in the culvert, as designed, for the purpose of determining capacity.

If more than one height exists, record the predominant height.

Record the variable conditions in Bridge Remarks – General (Item 8A1).

CODING INSTRUCTIONS

A three-digit field, with one decimal position.

Enter the measurement in feet and rounded to the nearest tenth (.1) of a foot.

Leave blank if not applicable.

ITEM DESCRIPTION

This item is the total cross sectional area of all cells of the culvert, as designed, provided for the passage of water.

If the culvert is made up of areas of dissimilar individual cells, report the true calculated square footage of opening. Therefore, this measurement does not have to agree with the calculation made from values reported in Items 62B and 62C.

The variable opening dimensions should be recorded in Bridge Remarks – General (Item 8A1).

CODING INSTRUCTIONS

A three-digit field.

Enter the calculation in square feet, rounded to the nearest square foot.

Leave blank if not applicable.

NOTE: Culverts are typically designed to be a minimum 3" below the lowest point in the stream crossing. This data item represents the structural opening without infill, not the hydraulic opening.

ITEM DESCRIPTION

This item indicates the depth of fill (earth and pavement thickness) measured from the top slab of culverts or the top of bridge decks, to the top of the pavement surface.

This measurement is used to aid in the calculation of permit overloads.

Refer to Appendix C, Figure 4.2.

CODING INSTRUCTIONS

A three-digit field, with one decimal position.

Enter the measurement in feet and rounded to the nearest tenth (.1) of a foot.

Where there is no earth fill, enter 00.0.

Effective Date: 7/1/2016	ILLINOIS HIGHWAY INFORMATION SYSTEM Structure Information and Procedure Manual			
NBIS Required: Yes	Item Name	**OPERATING LOAD RATING METHOD**	Item No.	**63**
History Kept: Yes			Sheet	1 of 1
Structures	Highway On			
Update Screen	Load Rating		SIMS Field Name	
SIMS Table(s)	SIMD001 & ISISSummaryStateandLocal		LoadRatingMethod	

ITEM DESCRIPTION

This item indicates the load rating method used to determine the Operating Rating (Item 64B/B1) data fields for a structure.

CODING INSTRUCTIONS

A one-digit field.

Enter the appropriate code from the table below.

Code	Description
0	Field evaluation and documented engineering judgement
1	Load Factor (LF)
2	Allowable Stress (AS)
3	Load and Resistance Factor (LRFR)
4	Load Testing
5	No rating analysis or evaluation performed
6	Load Factor (LF) reported by Rating Factor (RF)
7	Allowable Stress (AS) reported by Rating Factor (RF)
8	Load and Resistance Factor (LRFR) reported by Rating Factor (RF)
A	Assigned rating based on Load Factor Design (LFD) reported in metric tons
D	Assigned rating based on Load Factor Design (LFD) reported by Rating Factor (RF)
E	Assigned rating based on Allowable Stress Design (ASD) reported by Rating Factor (RF)
F	Assigned rating based on Load and Resistance Factor Design (LRFD) reported by Rating Factor (RF)
N	No Load Rating Required

NOTE: Rating Method codes 1, 2, 3, 4, and 5 are shown for historical purposes only. They are no longer used for new load ratings.

ITEM DESCRIPTION

This capacity rating, referred to as the Operating Rating, will result in the absolute maximum permissible load level to which the structure may be subjected for the vehicle type used in the rating.

The Operating Rating data field referred to as Rating Factor (Item 64B1) is coded as a 4-digit number with three decimal positions. Of the two data items Gross Tons (Item 64B) and Rating Factor (Item 64B1), it is the only load rating unit of measure that can be entered or updated on the Load Rating screen. Gross Tons (Item 64B) is computer calculated and displayed on the Load Rating screen.

All Operating and Inventory ratings shall be calculated and reported using an "HS" loading for highway bridges and culverts. Load Ratings are not normally recorded in the ISIS database for non-highway structures.

The FHWA has chosen the Rating Factor Method (RF) as the standard for computing Operating and Inventory ratings reported to the National Bridge Inspection Program (NBIP). Refer to Operating Rating Method (Item 63) and Inventory Rating Method (Item 65) for further information concerning Rating Methods.

To satisfy the requirements of the NBIP, the Operating Rating data is reported to the FHWA via Item 64B, one of two ways depending on Operating Rating Method. Either as the gross vehicle weight of the HS vehicle (including all three axles) in metric tons or by Rating Factor. The gross metric tonnage is computer calculated by multiplying the Rating Factor (Item 64B1) by 36 and making the appropriate conversion from tons to metric tons.

Item	Description	Length
64B	Gross load in tons	3 digits (one decimal)
64B1	Rating Factor	4 digits (three decimals)

Item 64B COMPUTER GENERATED (Cannot be entered).
Gross Tons = Rating Factor x 36

Item 64B1 A four-digit field, with three decimal positions.
Enter the Rating Factor rounded to the nearest thousandth.

If the bridge is closed and/or will no longer carry any live load, code Item 64B1 as "0.000".
Item 64B will be computer generated 0.0 tons.

Temporary Bridges, Shored Up or Repaired Bridges

The use or presence of a temporary bridge requires special consideration in coding. Since there is no permanent bridge, Items 64B1 and 66B1 should be coded "0.000" even though the temporary structure is rated as full legal load.

A bridge shored up or repaired on a temporary basis is considered a temporary bridge. The inventory and operating rating should be coded as if the temporary shoring were not in place.

EXAMPLES:

	Enter In Item 64B1	Computer Will Enter In Item 64B
HS30	1.500	54
Temporary bridge	0.000	0
Shored-up bridge	0.083	3 *
Structure (i.e. culvert) under sufficient fill that live load is insignificant (according to AASHTO design)	2.750	99

***** Load capacity without shoring.

ITEM DESCRIPTION

This item indicates the agency that performed the rating calculations for the Inventory and Operating Ratings of the structure.

CODING INSTRUCTIONS

A one-digit field.

Code	Agency
1	Local Agency
2	Illinois Department of Transportation
3	Consultant
N	Not determined

ITEM DESCRIPTION

Remarks related to the Operating/Inventory Rating data.

CODING INSTRUCTIONS

A unlimited text field.

Enter appropriate comments beginning at the first space available using any combination of letters, numbers, symbols and spaces. Abbreviations can be used as long as they are not ambiguous.

ITEM DESCRIPTION

This item indicates the load rating method used to determine the Inventory Rating (Item 66B/B1) data fields for a structure. Reference is made to this data item only in the FHWA's Recording and Coding Guide for the Structure Inventory and Appraisal of the Nation's Bridges. The ISIS database does not specifically record this data item.

The Method To Determine Inventory Rating (Item 65) value is the same value as recorded in the data field Method To Determine Operating Rating (Item 63).

CODING INSTRUCTIONS

DO NOT ENTER

A one-digit field.

Enter the appropriate code from the table below.

Code	Description
0	Field evaluation and documented engineering judgement
1	Load Factor (LF)
2	Allowable Stress (AS)
3	Load and Resistance Factor (LRFR)
4	Load Testing
5	No rating analysis or evaluation performed
6	Load Factor (LF) reported by Rating Factor (RF)
7	Allowable Stress (AS) reported by Rating Factor (RF)
8	Load and Resistance Factor (LRFR) reported by Rating Factor (RF)
A	Assigned rating based on Load Factor Design (LFD) reported in metric tons
D	Assigned rating based on Load Factor Design (LFD) reported by Rating Factor (RF)
E	Assigned rating based on Allowable Stress Design (ASD) reported by Rating Factor (RF)
F	Assigned rating based on Load and Resistance Factor Design (LRFD) reported by Rating Factor (RF)
N	No Load Rating Required

NOTE: Rating Method codes 1, 2, 3, 4, and 5 are shown for historical purposes only. They are no longer used for new load ratings.

ITEM DESCRIPTION

This capacity rating, for the vehicle type used in the rating, will result in a load level that can safely utilize an existing structure for an indefinite period of time.

Item	Description	Length
66B	Gross load in tons	3 digits (one decimal)
66B1	Rating Factor	4 digits (three decimals)

Item 66B COMPUTER GENERATED (Cannot be entered).
Gross Tons = Rating Factor x 36

Item 66B1 A four-digit field, with three decimal positions.
Enter the Rating Factor rounded to the nearest thousandth.

If the bridge is closed and/or will no longer carry any live load, code Item 66B1 as "0.000".
Item 66B will be computer generated 0.0 tons.

NOTE: See the Item description for Item 64B/B1 (Operating Rating) for more a detailed explanation

ITEM DESCRIPTION

This is the date on which the current load rating (Item 64 or 66) became effective or was re-calculated / re-evaluated for the structure.

CODING INSTRUCTIONS

A ten-digit field (standard date format xx/xx/xxxx).

ITEM DESCRIPTION

The items in the Appraisal section are used to evaluate a bridge in relation to the level of service that it provides on the highway system of which it is a part. The structure will be compared to current bridge design standards for that particular type of road as further defined in the individual Appraisal Item descriptions. Note Item 72 for special criteria when evaluating this item.

CODING INSTRUCTIONS

The items comprising this section are:

Item Number	Item Name	Length
67	Structural Evaluation	1 digit
68	Deck Geometry Appraisal	1 digit
69	Underclearance (Vertical & Horizontal) Appraisal	1 digit
71	Waterway Adequacy Appraisal	1 digit
72	Approach Roadway Alignment Appraisal	1 digit

See Item 71 for this item's specific coding requirements.

The following codes apply to Items 67, 68, 69 and 72:

Code	Description
N	Not applicable
9	Superior to present desirable criteria
8	Equal to present desirable criteria
7	Better than present minimum criteria
6	Equal to present minimum criteria
5	Somewhat better than minimum adequacy to tolerate being left in place as is
4	Meets minimum tolerable limits to be left in place as is
3	Basically intolerable requiring high priority of corrective action
2	Basically intolerable requiring high priority of replacement
0	Bridge closed

Hard Copies Uncontrolled

Completed bridges not yet opened to traffic, if rated, shall be appraised as if open to traffic. Design values (for example ADT) shall be used for the evaluation.

History is retained for these items based upon each Inspection Date (Item 90).

Items 67, 68 and 69 are COMPUTER GENERATED and only appear on the Appraisals screen. If any of the Items 67, 68 or 69 are preceded by an asterisk (*****), this indicates that one or more of the items needed to computer generate the Item 67, 68 or 69 is missing or invalid.

ITEM DESCRIPTION

The appraisal rating is based on the condition rating of the Superstructure (Item 59), Substructure (Item 60), and Inventory Rating (Item 66). This item generally is coded no higher than the lowest condition rating of the superstructure or the substructure. The code is also based on the value obtained from Table 1 which evaluates the inventory rating (HS equivalent) shown for various traffic volumes.

History is retained for this item based on each Inspection Date (Item 90). Though the value may be recalculated nightly for other uses within the ISIS database, the nightly value is not specifically retained unless an Inspection record (particularly an Item 90 Inspection date) is entered into the database.

CODING INSTRUCTIONS

DO NOT ENTER

For other than culverts, the lowest of the codes obtained from Item 59 - Superstructure, Item 60 - Substructure, or Table 1 is used.

For culverts, the lowest of the codes obtained from Item 62 - Culverts, or Table 1 is used.

Table 1 Notes:

1. The live load used in establishing the Inventory Rating shall be one of the standard AASHTO vehicles or the maximum legal loads of the State.

2. In Table 1, the Inventory Rating is the coded HS rating or its equivalent. If the comparable HS equivalent is not calculated, a factor to determine the HS equivalent will be used.

3. Those agencies which have used other than an HS loading for calculating the inventory rating may use the following purposely conservative factors to convert to an equivalent coded HS rating load for use with Table 1.

1st digit of Item 66	Multiply 2nd and 3rd digits by
1	1.25
2	1.00
3	1.20
4	1.00
5	.70
6	.64
9	1.00

4. All bridges on the Interstate system shall be evaluated using the ADT column of > 5000 regardless of the actual ADT on the bridge.

Table 1: Rating by Comparison of ADT (Item 29)
And Inventory Rating – Item 66B

Structural Evaluation Appraisal Code	Inventory Rating		
	Average Daily Traffic (ADT)		
	0-500	501-5000	>5000
9	> 236* (HS20) **	> 236 (HS20)	> 236 (HS20)
8	= 236 (HS20)	= 236 (HS20)	= 236 (HS20)
7	>= 231 (HS17)	>= 231 (HS17)	>= 231 (HS17)
6	>= 223 (HS13)	>= 225 (HS14)	>= 227 (HS15)
5	>= 218 (HS10)	>= 220 (HS11)	>= 222 (HS12)
4	>= 212 (HS7)	>= 214 (HS8)	>= 218 (HS10)
3	Inventory rating less than value in appraisal code of 4 and requiring corrective action. (See Item 75A)		
2	Inventory rating less than value in appraisal code of 4 and requiring corrective action. (See Item 75A)		
0	Bridge Closed		

ITEM DESCRIPTION

The overall rating for deck geometry includes two evaluations:

(a) The curb-to-curb or face-to-face of rail bridge width using Table 2A, B, C or D, and

(b) The minimum vertical clearance over the bridge roadway using Table 2E.

The lower of the codes obtained from these tables is used.

The curb-to-curb or face-to-face of rail dimension is taken from Bridge Roadway Width (Item 51). Minimum Vertical Clearance Over Bridge Roadway (Item53A/B) is used to evaluate the vertical clearance.

The values provided in the tables are for rating purposes only. Current design standards must be used for structure design or rehabilitation.

History is retained for this item based on each Inspection Date (Item 90). Daily calculated values are not retained.

CODING INSTRUCTIONS

DO NOT ENTER

Table 2A & 2B. Rating by Comparison of ADT (Item 29) and Bridge Roadway Width (Item 51)

Table 2A							Table 2B	
Deck Geometry Code	Bridge Roadway Width 2 Lanes, 2-Way Traffic; Also 1 Lane Bridges Not Designated as Ramps (Key Route Appurtenance not "4")						Bridge Roadway Width 1 Lane, 2-Way Traffic	
	AADT						AADT	
	0 - 100	101 - 400	401 - 1000	1001 - 2000	2001 - 5000	> 5000	0 - 100	> 100
9	> 32	> 36	> 40	> 44	---	---	---	---
8	= 32	= 36	= 40	= 44	> 44	---	> 15'-11"	---
7	>= 28	>= 32	>= 36	>= 40	= 44	> 44	>= 15	---
6	>= 24	>= 28	>= 30	>= 34	>= 40	= 44	>= 14	---
5	>= 20	>= 24	>= 26	>= 28	>= 34	>= 38	>= 13	---
4	>= 18	>= 20	>= 22	>= 24	>= 28	>= 32*	>= 12	---
3	>= 16	>= 18	>= 20	>= 22	>= 26	>= 30**	>= 11	>= 15'-11"
2	< 16	< 18	< 20	< 22	< 26	< 30**	< 11	>= 15'-11"
0	Bridge Closed							

* Use 28 as the Bridge Roadway Width for structures longer than 200 feet.
** Use 26 as the Bridge Roadway Width for structures longer than 200 feet.

NOTES:

- Use the lower appraisal code for values between those listed in the table
- Dimensions are in feet
- For 3 or more undivided lanes of 2-way traffic, use Table 2C, “Other Multilane Divided Facilities”
- Use Table 2A, not Table 2B, for code 9 and for codes 8 through 4 inclusive when the AADT > 100 – Single lane bridges less than 16 feet wide carrying 2-way traffic are always appraised at 3 or below if they carry more than an AADT of 100

Table 2C & 2D. Rating by Comparison of Number of Lanes (Item 28) and Bridge Roadway Width (Item 51)

Deck Geometry Code	Table 2C				Table 2D	
	Bridge Roadway Width 2 or More Lanes Each Direction				Bridge Roadway Width 1-Way Traffic	
	Interstate and Other Divided Freeways		Other Multilane Divided Facilities		Ramps Only	
	2 Lanes	3 or More Lanes	2 Lanes	3 or More Lanes	1 Lane	2 or More Lanes
9	> 42	> 12N+24	> 42	> 12N+18	> 26	> 12N+12
8	= 42	= 12N+24	= 42	= 12N+18	= 26	= 12N+12
7	>= 40	>= 12N+20	>= 38	>= 12N+15	>= 24	>= 12N+10
6	>= 38	>= 12N+16	>= 36	>= 12N+12	>= 22	>= 12N+8
5	>= 36	>= 12N+14	>= 33	>= 11N+10	>= 20	>= 12N+6
4	>= 34 (29)*	>= 11N+12 (11N+7)*	>= 30	>= 11N+6	>= 18	>= 12N+4
3	>= 33 (28)*	>= 11N+11 (11N+6)*	>= 27	>= 11N+5	>= 16	>= 12N+2
2	< 33 (28)*	>= 11N+11 (11N+6)*	< 27	< 11N+5	< 16	< 12N+2
0	Bridge Closed					

* Use value in parentheses for bridges longer than 200 feet.

NOTES:

- Use the lower appraisal code for values between those listed in the table
- Dimensions are in feet
- Use Table 2C, “Other Multilane Divided Facilities”, for 3 or more undivided lanes of 2-way traffic
- N = Number of Lanes of Traffic

Table 2E. Rating by Comparison of Minimum Vertical Clearance over Bridge Roadway (Item 53) and Functional Classification (Item 26)

Table 2E			
Deck Geometry Code	Minimum Vertical Clearance		
	Functional Classification for Route On Structure		
	Interstate and Other Freeway (FC = 1 & 2) / All Routes - Except as Noted for Urban Areas	Other Principal and Minor Arterials (FC = 2, 3, 4)	Major and Minor Collectors and Locals (FC = 5, 6, 7)
9	> 17'-0"	> 16'-6"	> 16'-6"
8	= 17'-0"	= 16'-6"	= 16'-6"
7	>= 16'-9"	>= 15'-6"	>= 15'-6"
6	>= 16'-6"	>= 14'-6"	>= 14'-6"
5	>= 15'-9"	>= 14'-3"	>= 14'-3"
4	>= 15'-0"	>= 14'-0"	>= 14'-0"
3	Vertical clearance less than value in rating code of 4 and requiring corrective action. (See Item 75A)		
2	Vertical clearance less than value in rating code of 4 and requiring replacement. (See Item 75A)		
0	Bridge Closed		

NOTE: Use the lower appraisal code for values between those listed in the table

ITEM DESCRIPTION

This item evaluates vertical and horizontal underclearances from the through roadway to the superstructure or substructure units, respectively.

"N" is coded unless the bridge is over a highway or railroad.

The vertical underclearance is evaluated using Table 3A. The horizontal underclearance is evaluated using Table 3B. The lower of the codes obtained from Table 3A and Table 3B is used.

Bridges seldom are closed due to deficient underclearances. However, these bridges may be good candidates for rehabilitation or replacement.

Minimum Vertical Underclearance (Item 54B), Minimum Lateral Underclearance on Right (Item 55B), and Minimum Lateral Underclearance on Left (Item 56) are used to evaluate this item.

The Functional Classification used in the table is for the underpassing route.

History is retained for this item based on each Inspection Date (Item 90). Intermediate weekly or daily values are not retained.

CODING INSTRUCTIONS

DO NOT ENTER

Table 3A. Rating by Comparison of Minimum Vertical Underclearance (Item 54B) and Functional Classification (Item 26) of Underpassing Route

Table 3A				
Underclearance Appraisal Code	Minimum Vertical Clearance			
	Functional Classification for Route Under Structure			Railroad
	Interstate and Other Freeway (FC = 1 & 2) / All Routes - Except as Noted for Urban Areas	Other Principal and Minor Arterials (FC = 2, 3, 4)	Major and Minor Collectors and Locals (FC = 5, 6, 7)	
9	> 17'-0"	> 16'-6"	> 16'-6"	> 23'-0
8	= 17'-0"	= 16'-6"	= 16'-6"	= 23'-0"
7	>= 16'-9"	>= 15'-6"	>= 15'-6"	>= 22'-6"
6	>= 16'-6"	>= 14'-6"	>= 14'-6"	>= 22'-0"
5	>= 15'-9"	>= 14'-3"	>= 14'-3"	>= 21'-0"
4	>= 15'-0"	>= 14'-0"	>= 14'-0"	>= 20'-0"
3	Underclearance less than value in rating code of 4 and requiring corrective action. (See Item 75A)			
2	Underclearance less than value in rating code of 4 and requiring replacement. (See Item 75A)			
0	Bridge Closed			

NOTE: Use the lower appraisal code for values between those listed in the table

Table 3B. Rating by Comparison of Minimum Lateral Underclearance Right & Left (Item 54B) and Functional Classification (Item 26) of Underpassing Route

Minimum Lateral Underclearance							
UnderClearance Appraisal Code	Functional Classification (FC) of Under Routes						Railroad
	1-Way				2-Way		
	Principal Arterials - Interstate and Freeways (FC = 1 & 2)				Other Principal & Minor Arterials (FC = 2, 3, 4)	Major/Minor Collectors & Locals (FC = 5, 6, 7)	
	Mainline		Ramp				
	Left (N/W)	Right (S/E)	Left (N/W)	Right (S/E)			
9	> 30	> 30	> 4	> 10	> 30	> 12	> 20
8	= 30	= 30	= 4	= 10	= 30	= 12	= 20
7	>= 18	>= 21	>= 3	>= 9	>= 21	>= 11	>= 17
6	>= 6	>= 12		>= 8	>= 12	>= 10	>= 14
5	>= 5	>= 11		>= 6	>= 10	>= 8	>= 11
4	>= 4	>= 10	>= 2	>= 4	>= 8	>= 6	>= 8
3	Underclearance less than value in rating code of 4 and requiring corrective action (See Item 75A)						
2	Underclearance less than value in rating code of 4 and requiring replacement (See Item 75A)						
0	Bridge Closed						

NOTES:

- Use the lower appraisal code for values between those listed in the table
- Dimensions are in feet
- When acceleration or deceleration lanes or ramps are provided under 2-way traffic, use the value from the “Right” ramp column to determine code

ITEM DESCRIPTION

This item evaluates the load capacity of a bridge in comparison to the State legal load.

The Bridge Posting Level differs from Item 67 - Structural Evaluation in that Item 67 uses the inventory rating while the bridge posting requirement is normally based on the operating stress level.

The National Bridge Inspection Standards (NBIS) require the posting of load limits only if the maximum legal load in the State produces stresses in excess of the operating stress level. If the load capacity at the operating level is such that posting is required, this item shall be coded 0 (zero) through 4. If no posting is required at the operating level, this item shall be coded "L" or "5".

Although posting a bridge for load-carrying capacity is required only when the maximum legal load exceeds the operating stress capacity, highway agencies may choose to post at lower stress levels. This posting practice may appear to produce conflicting coding when Item 41 - Bridge Status is coded to show the bridge as actually posted at the site and Item 70 - Bridge Posting is coded as bridge posting not required. Since different criteria are used for coding these 2 items, this coding is acceptable and correct when the highway agency elects to post at less than the operating stress level. Item 70 shall be coded 0 through 4 only if the legal load of the State exceeds that permitted under the operating stress capacity.

The use or presence of a temporary bridge affects the coding. The load capacity shall reflect the actual capacity of the temporary bridge at the operating stress level. This also applies to bridges shored up or repaired on a temporary basis.

CODING INSTRUCTIONS

The following values are used to code this item:

Code	Relationship of Operating Rating Stress to Legal Load Stress
N	Non-Highway (No Load Rating required)
L	Legal Loads Only (No permit overloads allowed)
5	No Posting or Legal Load Restrictions Required

Posting Required for the following codes:

4	0.1 – 9.9% below
3	10.0 – 19.9% below
2	20.0 – 29.9% below
1	30.0 – 39.9% below
0	> 39.9% below

NOTE: Structures coded “0” thru “4” should also be coded in Items 70A1 thru 70C2, as applicable. Bridge Status (Item 41) “E” structures, permanently closed, should be coded “0”.

ITEM DESCRIPTION

This item indicates the maximum allowable gross weight limit, in tons, for single unit vehicles that may be posted on structures as determined or agreed to by the Central Bureau of Bridges and Structures (Bridge Rating Unit for State structures and Local Bridge Unit for local agency structures).

CODING INSTRUCTIONS

A two digit-field.

Enter gross tons.

Enter “BC” (representing “Bridge Closed”) for structures that should be closed.

Enter “LL” (representing “Legal Loads Only”) for structures that are restricted to legal loads and for which permits cannot be issued for overweight vehicles.

Leave blank for structures for which no maximum allowable posting is required.

Effective Date: 11/1/2018	ILLINOIS HIGHWAY INFORMATION SYSTEM Structure Information and Procedure Manual			
NBIS Required: No	Item Name	**POSTED SINGLE UNIT WEIGHT LIMIT**	Item No.	**70A2**
History Kept: Yes			Sheet	1 of 1
Structures	Highway On			
Update Screen	Routine		SIMS Field Name	
SIMS Table(s)	SIMD002 & ISISSummaryStateandLocal		PostActualSingle	

ITEM DESCRIPTION

This item indicates the actual in-place posted gross weight limit, in tons, for single unit vehicles. Posted limits must be in accordance with the Illinois Supplement to the National Manual of Uniform Traffic Control Devices (MUTCD).

History is retained for this item per each Inspection Date - Item 90.

CODING INSTRUCTIONS

A two-digit field.

Enter the gross tons, filling leading spaces with zeros.

Enter “LL” for structures when signs are in place that restrict traffic to legal loads only (i.e. 41 tons gross, 12 tons/axle).

Enter "BC" when the signing for a bridge closure is in place.

Leave blank for structures for which no applicable posting is in-place or when signs are illegible, not visible from each approach or not in conformance with the Manual for Uniform Traffic Control Devices.

EXAMPLES:

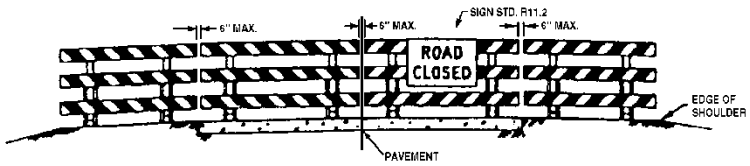

Code - BC (Local Agency)

Enter - 10

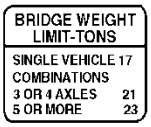

Enter - 17

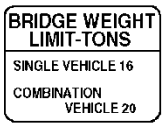

Enter - 16

Leave Blank

NOTES FROM FIGURE 7.E (“LOW VOLUME ROAD CLOSURE”) – OF THE IDOT BUREAU OF TRAFFIC POLICY AND PROCEDURES MANUAL:

1 . . .”Guardrail may be used in lieu of or in conjunction with the barricade fence where an extreme hazard exists immediately beyond the closure point. Barricades, when used, shall be striped red and white and be fully reflectorized. If practical, old pavement should be removed to some distance beyond the closure point or covered with dirt to minimize the illusion of the road continuing and to provide a reasonable safe recovery area. The markers for the end of the roadway shall conform with Section 3C-4 of the MUCTD.”

Enter - LL

ITEM DESCRIPTION

This item indicates the maximum allowable gross weight limit, in tons, for tractor-semitrailer and/or truck-and-trailer combination vehicles with 3 or 4 axles that may be posted as determined or agreed to by the Central Bureau of Bridges and Structures (Bridge Rating Unit for State structures and Local Bridge Unit for local agency structures).

CODING INSTRUCTIONS

A two-digit field.

Enter the gross tons.

Leave blank for structures for which no maximum allowable posting is required or for which Item 70A1 has been coded "BC" or “LL”.

Effective Date: 7/1/2016	ILLINOIS HIGHWAY INFORMATION SYSTEM Structure Information and Procedure Manual			
NBIS Required: No	Item Name	**POSTED COMB. TYPE 3S-1 WT. LIMIT**	Item No.	**70B2**
History Kept: Yes			Sheet	1 of 1
Structures	Highway On			
Update Screen	Routine		SIMS Field Name	
SIMS Table(s)	SIMD002 & ISISSummaryStateandLocal		PostActualComb3S1	

ITEM DESCRIPTION

This item indicates the actual in-place posted gross weight limit, in tons, for tractor-semitrailer and/or truck-and-trailer combination vehicles with three or four axles. Posted limits must be in accordance with the Illinois Supplement to the National Manual on Uniform Traffic Control Devices (MUTCD).

History is retained for this item per each Inspection Date - Item 90.

CODING INSTRUCTIONS

A two-digit field.

Enter the gross tons.

Leave blank for structures when:

- no posting is in place, or
- signs are illegible, or
- signs are not visible from each approach, or
- signs are not in conformance with the Manual for Uniform Traffic Control Devices, or
- Item 70A2 is coded "BC" or “LL” for a structure

EXAMPLES:

Enter - 10

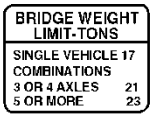

Enter - 21

Enter - 20

Leave Blank

ITEM DESCRIPTION

This item indicates the maximum allowable gross weight limit, in tons, for tractor-semitrailer and/or truck-and-trailer combination vehicles with 5 or more axles that may be posted as determined or agreed to by the Central Bureau of Bridges and Structures (Bridge Rating Unit for State structures and Local Bridge Unit for local agency structures).

CODING INSTRUCTIONS

A two-digit field.

Enter the gross tons.

Leave blank for structures for which no posting is required or for which Item 70A1 has been coded "BC" or “LL”.

Effective Date: 7/1/2016	ILLINOIS HIGHWAY INFORMATION SYSTEM Structure Information and Procedure Manual			
NBIS Required: No	Item Name	**POSTED COMB. TYPE 3S-2 WT. LIMIT**	Item No.	**70C2**
History Kept: Yes			Sheet	1 of 1
Structures	Highway On			
Update Screen	Routine		SIMS Field Name	
SIMS Table(s)	SIMD002 & ISISSummaryStateandLocal		PostActualComb3S2	

ITEM DESCRIPTION

This item indicates the actual in-place posted gross weight limit, in tons, for tractor-semitrailer and/or truck-and-trailer combination vehicles with five or more axles. Posted limits must be in accordance with the Illinois Supplement to the National Manual on Uniform Traffic Control Devices (MUTCD).

History is retained for this item per each Inspection Date - Item 90.

CODING INSTRUCTIONS

A two-digit field.

Enter the gross tons.

Leave Item 70C2 blank for structures when:

- no posting is in place, or
- signs are illegible, or
- signs are not visible from each bridge approach, or
- signs are not in conformance with the Manual for Uniform Traffic Control Devices, or
- Item 70A2 is coded “BC” or “LL” for a structure

EXAMPLES:

Enter - 10

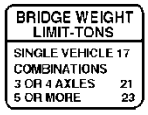

Enter - 23

Enter - 20

Leave Blank

ITEM DESCRIPTION

This item indicates that a structure may be posted to limit vehicular traffic to one-truck-at-a-time (OTAT) for the allowable weight limits on the structure as determined or agreed to by the Central Bureau of Bridges & Structures, Local Bridge Unit.

Note: This item pertains to **Local** structures only.

CODING INSTRUCTIONS

A one-digit field.

Code	Condition
Leave Blank	Not required to be posted for OTAT
1	Required to be posted for OTAT for the allowable weight limits

Effective Date: 7/1/2016	ILLINOIS HIGHWAY INFORMATION SYSTEM Structure Information and Procedure Manual			
NBIS Required: No	Item Name	**POSTED ONE TRUCK AT A TIME**	Item No.	**70D2**
History Kept: Yes			Sheet	1 of 1
Structures	Highway On			
Update Screen	Routine		SIMS Field Name	
SIMS Table(s)	SIMD002 & ISISSummaryStateandLocal		PostActualOTAT	

ITEM DESCRIPTION

This item indicates the actual in-place posting that limits vehicular traffic to one-truck-at-a-time on the structure. The posting must be in accordance with the Illinois Supplement to the National Manual on Uniform Traffic Control Devices (MUTCD).

History is retained for this item based on each Inspection Date - Item 90.

CODING INSTRUCTIONS

A one-digit field.

Enter the appropriate code for all structures.

Leave Item 70D2 blank for structures when:

- no posting is in place, or
- signs are illegible, or
- signs are not visible from each bridge approach, or
- signs are not in conformance with the Manual for Uniform Traffic Control Devices.

EXAMPLES:

Code	Condition
Leave Blank	Not posted for OTAT
1	Posted for OTAT

ITEM DESCRIPTION

This item appraises the waterway opening with respect to passage of flow through the bridge. The following codes shall be used in evaluating waterway adequacy. Site conditions may warrant somewhat higher or lower ratings than indicated by the table (e.g., flooding of an urban area due to a restricted bridge opening).

Where overtopping frequency information is available, the descriptions given in the table for chance of overtopping mean the following:

Remote	-	greater than 100 years
Slight	-	11 to 100 years
Occasional	-	3 to 10 years
Frequent	-	less than 3 years

Adjectives describing traffic delays mean the following:

Insignificant	-	Minor inconvenience. Highway passable in a matter of hours.
Significant	-	Traffic delays of up to several days.
Severe	-	Long term delays to traffic with resulting hardship.

History is retained for this item based on each Inspection Date - Item 90.

CODING INSTRUCTIONS

A one-digit field.

Enter the appropriate code from the previous discussion and the following table:

Functional Classification			Description
Interstate (1)	OPA (3) Min. Arterial (4) Maj. Collector (5)	Min. Collector (6) Local (7)	
Waterway Adequacy Appraisal Code			
N	N	N	Bridge not over roadway
9	9	9	Bridge deck and roadway approaches above flood water elevations (high water). Chance of overtopping is remote.
8	8	8	Bridge deck above roadway approaches. Slight Chance of overtopping roadway approaches.
6	6	7	Slight chance of overtopping bridge deck and Roadway approaches.
4	5	6	Bridge deck above roadway approaches. Occasional overtopping of roadway approaches with insignificant traffic delays.
3	4	5	Bridge deck above roadway approaches. Occasional overtopping of roadway approaches with significant traffic delays. *
2	3	4	Occasional overtopping of bridge deck and roadway approaches with significant traffic delays. *
2	2	3	Frequent overtopping of bridge deck and roadway approaches with significant traffic delays. *
2	2	2	Occasional or frequent overtopping of bridge deck and roadway approaches with severe traffic delays. *
0	0	0	Bridge closed.

* For bridges built at the bottom of sag vertical curves, the flooding of approaches is not considered for appraisal.

Hard Copies Uncontrolled

Effective Date: 7/1/2016	ILLINOIS HIGHWAY INFORMATION SYSTEM Structure Information and Procedure Manual			
NBIS Required: Yes	Item Name	**APPROACH ROADWAY ALIGNMENT**	Item No.	**72**
History Kept: Yes			Sheet	1 of 1
Structures	Highway On			
Update Screen	Routine		SIMS Field Name	
SIMS Table(s)	SIMD002 & ISISSummaryStateandLocal		ApprRdwyAlignment	

ITEM DESCRIPTION

This item identifies those bridges that do not function properly or adequately due to the alignment of the approaches.

Code the rating based on the adequacy of the approach roadway alignment. It is not intended that the approach roadway alignment be compared to current standards but rather to the existing highway alignment. This concept differs from other appraisal evaluations. The establishment of set criteria to be used at all bridge sites is not appropriate for this item. The basic criteria are how the alignment of the roadway approaches to the bridge relate to the general highway alignment for the section of highway that the bridge is on.

The individual structure is to be rated in accordance with the general appraisal rating guide given with the composite discussion of Items 67-72 in lieu of specific design values.

The approach roadway alignment will be rated intolerable (a code of 3 or less) only if the horizontal or vertical curvature requires a substantial reduction in the vehicle operating speed from that on the highway section. A very minor speed reduction will be rated a 6, and when a speed reduction is not required, the appraisal code will be an 8. Codes may be selected between these general values. For example, if the highway section requires a substantial speed reduction due to vertical or horizontal alignment, and the roadway approach to the bridge requires only a very minor additional speed reduction at the bridge, the appropriate code would be a 6.

The following guidelines may be used as a means of determining the difference between a minor reduction and substantial reduction of operating speed:

No reduction in the operating speed - Code as an “8”
Minor reduction in operating speed - ≤ 9 mph (Code “4” or greater)
Substantial reduction in operating speed - ≥ 10 mph (Code “3” or less)

The remaining codes between these general values should be applied at the inspector’s discretion.

Speed reductions necessary because of structure width and not due to alignment shall not be considered in evaluating this item. An evaluation of each element (riding quality, settlement and structural condition) is determined and recorded using the scale 1 thru 5 on the Bridge Inspection Form. However, these individual elements' evaluation does not contribute to the overall appraisal rating of this item.

History is retained for this item based on each Inspection Date - Item 90.

CODING INSTRUCTIONS

A one-digit field.

Code a value from 0, 2 thru 9 in accordance with the previous discussion.

NOTE: If the location is corrected by proper installation of a warning sign or lowered speed limit sign, the appraisal rating for this item should not be rated down.

ITEM DESCRIPTION

These items record (1) the type of work proposed to be accomplished on the structure to improve it to the point that it will provide the type of service needed, and (2) whether the proposed work is to be done by contract or force account.

Item	Description	Length
75A	Type of Work Proposed	2 digits
75B	Work Done by	1 digit

These items must be coded for all bridges eligible for the Highway Bridge Program (see Item 131 - HBP Eligibility). It may be coded for other bridges at the option of the highway agency. The costs recorded in Items 94 thru 97 are reflective of the type of work shown in this item.

CODING INSTRUCTIONS

Enter into the first field (75A) the appropriate codes for the type of work proposed:

Code	Description
31	Replacement of bridge or other structure due to substandard load carrying capacity or substandard bridge roadway geometry.
32	Replacement of bridge or other structure because of relocation of road.
33	Widening of existing bridge or other major structure without deck rehabilitation or replacement; includes culvert lengthening.
34	Widening of existing bridge with deck rehabilitation or replacement.
35	Bridge rehabilitation because of general structure deterioration or inadequate strength.
36	Bridge deck rehabilitation with only incidental widening.
37	Bridge deck replacement with only incidental widening.
38	Other structural work.

The third digit shall be coded using one of the following codes to indicate whether the proposed work is to be done by contract or by force account:

Code	Description
1	Work to be done by contract
2	Work to be done by owner's forces

Hard Copies Uncontrolled

ITEM DESCRIPTION

This item represents the length of the proposed bridge improvement, rounded to the nearest foot.

For replacement or rehabilitation of the entire bridge, the length should be back to back of backwalls of abutments or from pavement notch to pavement notch.

For replacement or rehabilitation of only part of the structure, use the length of the portion to be improved.

This item must be coded for all bridges eligible for the Highway Bridge Program (HBP). It may be coded for other bridges at the option of the highway agency. This item must be compatible with Item 75B - Type of Improvement and the costs recorded in Items 94 thru 97.

For culvert improvements, use the proposed length measured along the centerline of the barrel regardless of the depth below grade. The measurement should be made between the inside faces of the top parapet or edge-stiffening beam of the top slab.

For substructure or channel work only, code the length of superstructure over, or supported by, the substructure or channel.

CODING INSTRUCTIONS

A six-digit field.

Enter the length in feet, rounded to the nearest whole foot.

Typically, a replacement bridge is longer than the bridge being replaced. When site-specific data is lacking, see Appendix C, Figure 10.1 for an acceptable method of calculating the length of a replacement bridge.

ITEM DESCRIPTION

This item is the date of the most recent inspection of the structure in accordance with the National Bridge Inspection Standards.

Item 90 may differ from the inspection date required in Fracture Critical Inspection Date (Item 93A), Underwater Inspection Date (Item 93B), and Special Inspection Date (Item 93C).

This item acts as the control for history for all items that appear on the Routine inspection update screen. That is, as a new inspection date is entered, all previous inspection data are automatically retained in a history record.

CODING INSTRUCTIONS

A ten-digit field (standard date format xx/xx/xxxx).

Effective Date: 7/1/2016	ILLINOIS HIGHWAY INFORMATION SYSTEM Structure Information and Procedure Manual			
NBIS Required: No	Item Name	**AGENCY PROGRAM MANAGER**	Item No.	**90A**
History Kept: Yes			Sheet	1 of 1
Structures	Highway On			
Update Screen	Routine		SIMS Field Name	
SIMS Table(s)	SIMD002		ProgramManager	

ITEM DESCRIPTION

This item indicates the name of the qualified Program Manager from the agency responsible for the bridge inspections in that jurisdiction.

CODING INSTRUCTIONS

A twenty-digit field, selected from a dropdown list of qualified Program Managers in the State of Illinois – as maintained by the Bridge Management Unit, of the Bureau of Bridges & Structures. Only qualified Program Managers who are current on their refresher training will appear on the dropdown list.

Effective Date: 7/1/2016	ILLINOIS HIGHWAY INFORMATION SYSTEM Structure Information and Procedure Manual			
NBIS Required: No	Item Name	**ROUTINE INSP. TEAM LEADER**	Item No.	**90A1**
History Kept: Yes			Sheet	1 of 1
Structures	Highway On			
Update Screen	Routine		SIMS Field Name	
SIMS Table(s)	SIMD002 & ISISSummaryStateandLocal		InspBy1	

ITEM DESCRIPTION

This item indicates the name of the qualified Team Leader who physically performed the Routine NBIS Inspection associated with Routine NBIS Inspection Date (Item 90).

History is retained for this item per each Inspection Date (Item 90).

CODING INSTRUCTIONS

A twenty-digit field, selected from a dropdown list of qualified Team Leaders in the State of Illinois.

This field cannot be entered. It must be selected from the list of qualified Team Leaders, for all structures, State and Local.

ITEM DESCRIPTION

This item indicates the name of the individual who, working under a qualified Team Leader in the State of Illinois, physically performed the Routine NBIS Inspection associated with Routine NBIS Inspection Date (Item 90).

History is retained for this item per each Inspection Date (Item 90).

CODING INSTRUCTIONS

A unlimited text field.

If the person conducting the inspection is not a qualified Team Leader, code the person's name in the following format. Last name, first initial, middle initial (continuous text string).

ITEM DESCRIPTION

This item indicates the name of the qualified Program Manager that has been retained by an agency to be responsible for the bridge inspections in that jurisdiction.

CODING INSTRUCTIONS

A twenty-digit field, selected from a dropdown list of qualified Program Managers in the State of Illinois – as maintained by the Bridge Management Unit, of the Bureau of Bridges & Structures. Only qualified Program Managers who are current on their refresher training will appear on the dropdown list.

ITEM DESCRIPTION

This item records any miscellaneous remarks about the routine NBIS inspection that need to be made to clarify or document values or procedures.

Remarks must be recorded if any of the structure's condition ratings are less than "6".

History is retained for this item per each Inspection Date (Item 90).

CODING INSTRUCTIONS

A unlimited field.

Begin entry at the first space provided using any combination of letters, numbers, symbols and spaces. Abbreviations can be used as long as they are not ambiguous.

ITEM DESCRIPTION

This item reports the ambient air temperature, in degrees Fahrenheit, at the time of inspection of the structure.

History is retained for this item per each Inspection Date (Item 90).

CODING INSTRUCTIONS

A three-digit field.

For temperatures of less than zero degrees, enter the minus (-) sign to the immediate left of the degree entry.

ITEM DESCRIPTION

This item indicates the number of months between routine NBIS inspections of the structure. It is the scheduled interval for re-inspecting the structure on a regular basis.

CODING INSTRUCTIONS

A two-digit field, most generally computer generated.

For highways structures only, linking the Key Route On will automatically generate an interval of 3 months for State maintained structures and 6 months for Local maintained structures. Once the initial Routine Inspection has been performed and entered, the Routine Inspection Interval will automatically be recalculated to either 12, 24, or 48 months.

If a Routine Inspection Interval that is less than the calculated value is necessary, the Routine Inspection Interval can be lowered by coding the desired Routine Inspection Interval in the “Min” field, on the Intervals screen. The Routine Inspection Interval can only be lowered using the “Min” field, it cannot be raised above the automatically calculated value.

Entry of a new Routine Inspection record into the ISIS database will cause an automatic recalculation of the Routine Inspection Interval. Any updating of inventory data that goes into the Routine Inspection Interval calculation will also cause an automatic recalculation of the Routine Inspection Interval.

NOTE: For a detailed explanation of the criteria used in the automatic Routine Inspection Interval calculation, see the Structural Services Manual (Bureau of Bridges & Structures) - Section 3.4

ITEM DESCRIPTION

For a structure that has been designated as having fracture critical members, this item indicates the frequency (in numbers of months) by which the structure should receive a fracture critical inspection.

This interval is established for all fracture critical bridge types as indicated by Fracture Critical Type (Item 92A1).

Entry of a new fracture critical inspection record into the ISIS database will cause an automatic recalculation of the Fracture Critical Inspection Interval.

Other required special feature inspection intervals should be reported using Special Inspection Interval (Item 92C).

CODING INSTRUCTIONS

A two-digit field.

NOTE: For a detailed explanation of the criteria used in the automatic Fracture Critical Inspection Interval calculation, see the Structural Services Manual (Bureau of Bridges & Structures) – Section 3.4

ITEM DESCRIPTION

This item identifies a bridge or component type that contains fracture critical members, member components, or other related features.

This item must be coded before a Fracture Critical inspection can be entered in the ISIS database. The procedure is as follows:

- First, the Central Bureau of Bridges and Structures (BBS) must enter a type code on the ISIS FRACTURE CRITICAL INVENTORY screen that serves to identify the bridge as having a fracture critical member.
- Following the BBS entry, the District can then enter an inspection record for each identified member, using the FRACTURE CRITICAL screen on ISIS for ALL bridges and on BIS for STATE bridges only.

History is retained for each inspection of each fracture critical type.

CODING INSTRUCTIONS

A two-digit field.

Enter the appropriate code for the identified type.

Code	Description
A1	Two Girder System-Suspension Link and Pin
A2	Two Girder System-Suspension Single Pin
A3	Two Girder System-Tension Flanges of Riveted or Bolted Plate Girders
A4	Two Girder System-Bearing Seat of Suspended Spans
A5	Two Girder System-Tension Flange of Rolled Beam
A6	Two Girder system-Tension Flanges of Welded Plate Girders
A7	Two Girder System-Tension Flanges of Lattice Truss Web Girders
B1	Truss System-Eyebar and Pin Tension Members
B2	Truss System-Simple Span Welded Truss Tension Members
B3	Truss System-Hanger Link and Pin of Suspended Trusses
B4	Truss System-Single Element Tension Members
B5	Truss System-Simple Span Riveted or Bolted Tension Members
B6	Continuous Truss System-Welded, Riveted or Bolted Tension Members

Code	Description
C1	Suspension Bridge-Cables
C2	Cable Stayed-Cables
D1	Tied Arches-Welded Box Ties
D2	Tied Arches-Riveted or Bolted Box Ties
D3	Tied Arches-Stiffened Girders
D4	Tied Arches-Hangars Single Member
E1	Framed Steel Substructures-Welded or Rolled Abut./Pier Cap
E2	Framed Steel Substructures-Riveted or Bolted Abut./Pier Cap
E3	Framed Steel Substructures-Welded or Rolled Abut./Pier Column
E4	Framed Steel Substructures-Riveted or Bolted Abut./Pier Column
F1	Longitudinal Box Beam-Single Welded Box
F2	Longitudinal Box Beam-Single Riveted or Bolted Box
F3	Double Box Beam-Welded, Riveted, or Bolted
X1	Bascule
X2	Floorbeams Supporting Other Steel Members or Spacing > 15’
X3	Cross Frames or Transfer Beams
X4	Other

Hard Copies Uncontrolled

Effective Date: 7/1/2016	ILLINOIS HIGHWAY INFORMATION SYSTEM Structure Information and Procedure Manual			
NBIS Required: No	Item Name	**FRACTURE CRIT. NUMBER OF SPANS**	Item No.	**92A2**
History Kept: Yes			Sheet	1 of 1
Structures	Highway On			
Update Screen	Fracture Critical Inventory		SIMS Field Name	
SIMS Table(s)	SIMD010 & ISISSummaryStateandLocal		FCNbrOfSpans	

ITEM DESCRIPTION

This item indicates the number of spans in the structure that contain the identified fracture critical or related bridge type. If substructure elements are fracture critical, the item indicates the number of affected units.

This is not necessarily the same as the total number of spans contained within the total structure as reported in Items 45 and 46.

CODING INSTRUCTIONS

A three-digit field.

ITEM DESCRIPTION

This item gives the number of critical members, components or features contained in the identified fracture critical or related bridge type of the structure.

CODING INSTRUCTIONS

A three-digit field.

ITEM DESCRIPTION

This item indicates the number of months between underwater inspections.

The interval may vary according to actual conditions or potential problems.

CODING INSTRUCTIONS

A two-digit field.

ITEM DESCRIPTION

This item indicates the number of months or days between inspections for bridges that have problems or features requiring special attention in addition to the routine NBIS safety inspection.

CODING INSTRUCTIONS

A two-digit field.

ITEM DESCRIPTION

This item is the type or feature that needs to be inspected.

CODING INSTRUCTIONS

A one-digit field.

Feature Type Code	Description
A	Structural Damage/Deterioration – Steel Superstructure Elements
B	Structural Damage/Deterioration – Concrete Superstructure Elements
C	Structural Damage/Deterioration – Timber Superstructure Elements
D	Structural Damage/Deterioration – Steel Substructure Elements
E	Structural Damage/Deterioration – Concrete Substructure Elements
F	Structural Damage/Deterioration – Timber Substructure Elements
G	Underwater Condition Inspection – Debris and/or Erodible Soils
H	Underwater Condition Inspection – Flow Restriction/Velocity
I	Underwater Condition Inspection – Spread Footings not adequately keyed into rock or protected from the effects of streambed scour
J	Reserved
K	Underwater Condition Inspection – Scour Critical Evaluation Monitoring
L	Existing Streambed Scour Adjacent to Spread Footing
M	Existing Streambed Scour Adjacent to Pile Supported Footing
N	Existing Streambed Scour Adjacent to Pile Bent Substructure Unit
P	Embankment Movement or Settlement
Q	Substructure Movement or Settlement
R	Pin & Link in Multi-Girder (Redundant) Bridge
S	Specifically Identified Problematic Structural Details
T	Deck
Z	Other

ITEM DESCRIPTION

The date on which the need for a Special Inspection was initiated.

CODING INSTRUCTIONS

A ten-digit field (standard date format xx/xx/xxxx).

Effective Date: 7/1/2016	ILLINOIS HIGHWAY INFORMATION SYSTEM Structure Information and Procedure Manual			
NBIS Required: No	Item Name	**SPECIAL INSPECTION CLOSE DATE**	Item No.	**92C3**
History Kept: Yes			Sheet	1 of 1
Structures	Highway On			
Update Screen	Special Inspection Inventory		SIMS Field Name	
SIMS Table(s)	SIMD036		SFCloseDate	

ITEM DESCRIPTION

The date on which the need for a Special Inspection was rescinded.

CODING INSTRUCTIONS

A ten-digit field (standard date format xx/xx/xxxx).

ITEM DESCRIPTION

This item indicates the Office or Agency that initiated the Special Inspection.

CODING INSTRUCTIONS

A one-digit field.

Enter the appropriate code for the initiating agency.

Initiated By Code	Description
1	Central Bridge Office (BBS)
2	IDOT District Office
3	Local Agency
4	Other Agency

ITEM DESCRIPTION

This item records any remarks about the Special Inspection Inventory that has been initiated.

CODING INSTRUCTIONS

A unlimited text field.

Enter appropriate comments beginning at the first space available using any combination of letters, numbers, symbols and spaces. Abbreviations can be used as long as they are not ambiguous.

ITEM DESCRIPTION

The date when the determination is made that a Special Inspection is needed.

CODING INSTRUCTIONS

A ten-digit field (standard date format xx/xx/xxxx).

ITEM DESCRIPTION

The date when a structure should have a completed Special Inspection, determined by the appropriate agency and/or IDOT personnel.

CODING INSTRUCTIONS

A ten-digit field (standard date format xx/xx/xxxx).

ITEM DESCRIPTION

This item reports the most recent inspection date for structures containing fracture critical members indicated by the fracture critical or related bridge type (Item 92A1).

History is retained by this date for each fracture critical or related bridge type (Item 92A1).

CODING INSTRUCTIONS

A ten-digit field (standard date format xx/xx/xxxx).

ITEM DESCRIPTION

This item indicates the overall condition of the fracture critical member for the associated fracture critical or related bridge type.

History is retained according to Fracture Critical Inspection Date (Item 93A) for each inspection of an identified type as indicated by Fracture Critical Member Type (Item 92A1).

CODING INSTRUCTIONS

A one-digit field.

Code	Condition
9	EXCELLENT CONDITION (NEW)
8	VERY GOOD. No visible rust.
7	GOOD. Some rust may be present but without any section loss.
6	SATISFACTORY. Initial section loss (minor pitting, scaling, or flaking) up to 2% section loss.
5	FAIR. Initial section loss up to 10% in critical areas, fatigue or out-of-plane bending cracks may be present in secondary members, arrested fatigue cracks and cracks parallel to the direction of stress may be present in primary members, hinges may be showing minor corrosion problems.
4	POOR. Section loss up to 30% in critical area, fatigue or out-of-plane bending cracks may be present in primary members, previously arrested fatigue cracks propagating beyond arresting holes in primary members.

Code	Condition
3	SERIOUS. Advanced section loss up to 50%, extensive perpendicular to stress fatigue or out of plane bending cracks in primary members.
2	CRITICAL. Severe section loss over 50% requires special feature inspections, temporary supports or repairs may be required to remain open to traffic. The Bureau of Bridges and Structures shall be notified immediately.
1	IMMINENT FAILURE - Structure must be closed pending corrective action.
0	FAILED - Out of Service, beyond corrective action.

ITEM DESCRIPTION

This item provides for comments or observations pertinent to the inspection of fracture critical members or other related members requiring inspection.

History is retained according to Fracture Critical Inspection Date (Item 93A) for each inspection of an identified type as indicated by Fracture Critical Member Type (Item 92A1).

CODING INSTRUCTIONS

A unlimited text field.

Enter appropriate comments beginning at the first space available using any combination of letters, numbers, symbols and spaces. Abbreviations can be used as long as they are not ambiguous.

Effective Date: 7/1/2016	ILLINOIS HIGHWAY INFORMATION SYSTEM Structure Information and Procedure Manual			
NBIS Required: No	Item Name	**FRACTURE CRITICAL TEAM LEADER**	Item No.	**93A3**
History Kept: Yes			Sheet	1 of 1
Structures	Highway On			
Update Screen	Fracture Critical		SIMS Field Name	
SIMS Table(s)	SIMD011 & ISISSummaryStateandLocal		FCInspBy1	

ITEM DESCRIPTION

This item indicates the name of the qualified Team Leader who physically performed the Fracture Critical Inspection associated with Items 93A - 93A2.

It is preferred that Fracture Critical inspections be performed by a Registered Professional Engineer or Registered Structural Engineer, either of which should also have the appropriate experience.

History is retained according to Fracture Critical Inspection Date (Item 93A) for each inspection of an identified type as indicated by Fracture Critical Member Type (Item 92A1).

CODING INSTRUCTIONS

A twenty-digit field, selected from a dropdown list of qualified Team Leaders in the State of Illinois.

This field cannot be entered. It must be selected from the list of qualified Team Leaders, for all structures, State and Local.

ITEM DESCRIPTION

This item reports the ambient air temperature, in degrees Fahrenheit, at the time the inspection of fracture critical members or related members was made.

History is retained according to Fracture Critical Inspection Date (Item 93A) for each inspection of an identified type as indicated by Fracture Critical Member Type (Item 92A1).

CODING INSTRUCTIONS

A three-digit field.

For temperatures of less than zero degrees, enter the minus (-) sign to the immediate left of the degree entry.

ITEM DESCRIPTION

This item indicates the name of the individual who physically performed the Fracture Critical Inspection associated with Items 93A - 93A2.

It is preferred that Fracture Critical inspections be performed by a Registered Professional Engineer or Registered Structural Engineer, either of which should also have the appropriate experience.

History is retained according to Fracture Critical Inspection Date (Item 93A) for each inspection of an identified type as indicated by Fracture Critical Member Type (Item 92A1).

CODING INSTRUCTIONS

A unlimited text field.

If the person conducting the inspection is not a qualified Team Leader, code the person's name in the following format. Last name, first initial, middle initial (continuous text string).

ITEM DESCRIPTION

This item indicates the method used in performing the inspection of the fracture critical member for the associated fracture critical or related bridge type.

History is retained according to Item 93A (Fracture Critical Inspection Date) for each inspection of an identified type as indicated by Item 92A1 (Fracture Critical Member Type).

CODING INSTRUCTIONS

A check box.

Check the appropriate boxes for the method of inspection performed.

Method	Description
V	Visual
MP	Magnetic Particle
DP	Dye Penetrate
UT	Ultrasonic Testing

ITEM DESCRIPTION

This is the date of the most recent underwater inspection of the structure.

History is retained by this date for each of the items on the Underwater Update screen.

CODING INSTRUCTIONS

A ten-digit field (standard date format xx/xx/xxxx).

ITEM DESCRIPTION

This item indicates the condition of the underwater portion of substructure units and the condition of the adjacent stream beds.

History is retained by this item based on each Underwater Inspection Date (Item 93B).

CODING INSTRUCTIONS

Code	Condition
9	EXCELLENT CONDITION (NEW)
8	VERY GOOD - No problems noted.
7	GOOD. Minor cracking, spalls or scaling with few incidences of exposed reinforcement with only surface rust. Minor scour may have occurred at the foundation.
6	SATISFACTORY - Moderate deterioration, spalls, cracking or leaching in underwater units with up to 2% section loss. Moderate sedimentation or shallow, local scour may have occurred with exposure of the top of the pile supported footings, less than 2' deep scour around pile bents.
5	FAIR. Large portions of concrete or masonry units are spalled, scaled, or delaminated with exposed reinforcing steel up to 10% loss of concrete (horizontal cross section), up to 10% loss of reinforcement steel, extensive map cracking with leaching, spread footings with no undermining on soil and up to 5% undermining on rock, less than 2' of exposed piles or seal coat below pile supported footings, less than 6' deep scour around pile bents.
4	POOR. Active cracks in concrete and masonry units that indicate a reduction in the substructure unit's capacity to support the superstructure loads, up to 30% section loss of bearing seat(s) or pile(s), section loss of primary steel reinforcement up to 30%. Section loss of concrete up to 30%, undermining of spread footing which may be affecting the stability of the unit but no significant settlement has yet occurred, worse condition or combination of deterioration stated in condition rating "5".

Code	Condition
3	SERIOUS. Section losses up to 50%, adjacent column ties are broken causing the vertical reinforcement to be ineffective, severe scour or undermining of footings affecting the stability of the unit with some settlement of the substructure.
2	CRITICAL. Conditions worse than condition rating of “3”, section loss greater than 50%, special feature inspection is required to allow bridge to remain open, measurable lateral or vertical movement, unstable structures. The Bureau of Bridges and Structures shall be notified immediately.
1	IMMINENT FAILURE - Facility is closed, but can be brought back into service after repairs.
0	FAILED - Out of Service, beyond corrective action.

ITEM DESCRIPTION

This item records any remarks needing to be made about the underwater inspection to clarify or document values or procedures not covered by other data items.

History is retained by this item based on each Underwater Inspection Date (Item 93B).

CODING INSTRUCTIONS

A unlimited text field.

Begin entry at the first space provided using any combination of letters, numbers, symbols and spaces. Abbreviations can be used as long as they are not ambiguous.

Effective Date: 7/1/2016	ILLINOIS HIGHWAY INFORMATION SYSTEM Structure Information and Procedure Manual			
NBIS Required: No	Item Name	**UNDERWATER TEAM LEADER**	Item No.	**93B3**
History Kept: Yes			Sheet	1 of 1
Structures	Highway On			
Update Screen	Underwater		SIMS Field Name	
SIMS Table(s)	SIMD012 & ISISSummaryStateandLocal		UnderwaterInspBy1	

ITEM DESCRIPTION

This item indicates the name of the qualified Team Leader who physically performed the Underwater Inspection associated with Items 93B - 93B6.

It is preferred that these inspections be performed by a Registered Professional Engineer or Registered Structural Engineer, either of which should also have the appropriate experience.

History is retained for this item based on each Underwater Inspection Date (Item 93B).

CODING INSTRUCTIONS

A twenty-digit field, selected from a dropdown list of qualified Team Leaders in the State of Illinois.

This field cannot be entered. It must be selected from the list of qualified Team Leaders, for all structures, State and Local.

Effective Date: 7/1/2016	ILLINOIS HIGHWAY INFORMATION SYSTEM Structure Information and Procedure Manual			
NBIS Required: No	Item Name	**UNDERWATER INSPECTION METHOD**	Item No.	**93B4**
History Kept: Yes			Sheet	1 of 1
Structures	Highway On			
Update Screen	Underwater		SIMS Field Name	
SIMS Table(s)	SIMD012		UnderwaterInspMeth	

ITEM DESCRIPTION

This item indicates the method used in making the underwater inspection of the structure.

History is retained for this item based on each Underwater Inspection Date (Item 93B).

CODING INSTRUCTIONS

A check box.

Check the appropriate boxes for the method of inspection performed.

Method	Description
V	Visual
P	Probe
S	Sonar
D	Diver
O	Other

NOTE: Method “O” requires a text description of the method used

ITEM DESCRIPTION

This item reports the ambient air temperature, in degrees Fahrenheit, at the time the underwater inspection of the structure was conducted.

History is retained for this item based on each Underwater Inspection Date (Item 93B).

CODING INSTRUCTIONS

A three-digit field.

For temperatures of less than zero degrees, enter the minus (-) sign to the immediate left of the degree entry.

ITEM DESCRIPTION

This item indicates the name of the individual who physically performed the Underwater Inspection associated with Items 93B - 93B6.

It is preferred that these inspections be performed by a Registered Professional Engineer or Registered Structural Engineer, either of which should also have the appropriate experience.

History is retained for this item based on each Underwater Inspection Date (Item 93B).

CODING INSTRUCTIONS

A unlimited text field.

If the person conducting the inspection is not a qualified Team Leader, code the person's name in the following format. Last name, first initial, middle initial (continuous text string).

ITEM DESCRIPTION

This item indicates the substructure unit or cell protection unit to be inspected.

History is retained for this item based on each Underwater Inspection Date (Item 93B).

CODING INSTRUCTIONS

A unlimited text field.

EXAMPLES:

Pier 3 - West Abutment

Pier 4 - Cell Protection

ITEM DESCRIPTION

This item records the date of any inspection required due to special problems experienced by a structure.

Special Inspections are conducted to document and track specific deficiencies such as abnormal structural component movement, displacement, damage or scour criticality.

CODING INSTRUCTIONS

A ten-digit field (standard date format xx/xx/xxxx).

ITEM DESCRIPTION

This item reflects the condition of the feature or type that is being inspected and monitored.

CODING INSTRUCTIONS

A one-digit field.

Condition Type Code	Description
0	Worsening Condition Indicative of Imminent Structural Failure (closure required Until follow-up inspection by BBS staff)
1	Progression of Deterioration or Worsening of Condition noted (immediate Follow-up inspection by BBS staff or District Bridge Maintenance Engineer required)
2	No Change in Condition Noted
3	Corrected Condition Noted (Special Inspection no longer required after verification of adequacy of corrected condition by appropriate IDOT personnel)
4	Feature determined to be in good or better condition (primarily for monitoring problematic details)

Effective Date: 7/1/2016	ILLINOIS HIGHWAY INFORMATION SYSTEM Structure Information and Procedure Manual			
NBIS Required: No	Item Name	**SPECIAL INSPECTION TEAM LEADER**	Item No.	**93C2A**
History Kept: Yes			Sheet	1 of 1
Structures	Highway On			
Update Screen	Special Inspection		SIMS Field Name	
SIMS Table(s)	SIMD037		SFInspBy1	

ITEM DESCRIPTION

This item indicates the name of the qualified Team Leader who physically performed the Special Inspection associated with Special Inspection Date (Item 93C).

CODING INSTRUCTIONS

A twenty-digit field, selected from a dropdown list of qualified Team Leaders in the State of Illinois.

This field cannot be entered. It must be selected from the list of qualified Team Leaders, for all structures, State and Local.

ITEM DESCRIPTION

This item indicates the name of the individual who physically performed the Special Feature Inspection associated with Special Inspection Date (Item 93C).

CODING INSTRUCTIONS

A unlimited text field.

If the person conducting the inspection is not a qualified Team Leader, code the person's name in the following format. Last name, first initial, middle initial (continuous text string).

ITEM DESCRIPTION

This item records any remarks about the Special Inspection that was performed.

CODING INSTRUCTIONS

A unlimited text field.

Enter appropriate comments beginning at the first space available using any combination of letters, numbers, symbols and spaces. Abbreviations can be used as long as they are not ambiguous.

Effective Date: 11/1/2018	ILLINOIS HIGHWAY INFORMATION SYSTEM Structure Information and Procedure Manual			
NBIS Required: Yes	Item Name	**BRIDGE IMPROVEMENT COST**	Item No.	**94**
History Kept: No			Sheet	1 of 1
Structures	All			
Update Screen	Inventory		SIMS Field Name	
SIMS Table(s)	SIMD025		BridgeImprCost	

ITEM DESCRIPTION

This item is the estimated cost of the proposed structure improvement in thousands of dollars. This cost shall include only bridge construction costs, excluding roadway, land acquisition, detour, demolition, preliminary engineering and other associated costs.

This item is required for structures eligible for Highway Bridge Program (see Item 131). It is not to be used to record estimated maintenance costs.

In the absence of an actual cost estimate, one of the following formulas can be used to develop a proposed structure improvement cost:

Replacement = 2.2 x existing deck area x cost per sq. ft.
Rehabilitation = 1.5 x existing deck area x cost per sq. ft.
Widening = 1.1 x existing deck area x cost per sq. ft.

CODING INSTRUCTIONS

A six-digit field.

NOTE: Enter the base year of the cost estimate in Improvement Cost Estimate Year (Item 97)

Effective Date: 7/1/2016	ILLINOIS HIGHWAY INFORMATION SYSTEM Structure Information and Procedure Manual			
NBIS Required: Yes	Item Name	**ROADWAY IMPROVEMENT COST**	Item No.	**95**
History Kept: No			Sheet	1 of 1
Structures	All			
Update Screen	Inventory		SIMS Field Name	
SIMS Table(s)	SIMD025		RdwyImprCost	

ITEM DESCRIPTION

This item is the estimated cost of the proposed roadway improvement, in thousands of dollars, that is necessary to make the structure improvement functional. It shall include only roadway construction costs and excludes project costs beyond the scope of the portion required to allow the bridge improvement to function in a normal way. Also excluded from this item are costs associated with bridge construction, land acquisition, detour, preliminary engineering and other associated costs.

Do not use this item for estimating maintenance costs.

This item is required for structures eligible for the Highway Bridge Program (see Item 131).

In the absence of any actual estimated roadway improvement costs, a guide of 10 percent of the Bridge Improvement Cost (Item 94) is suggested.

CODING INSTRUCTIONS

A six-digit field.

NOTE: Enter the base year of the cost estimate in Improvement Cost Estimate Year (Item 97)

ITEM DESCRIPTION

This item records the total project cost in thousands of dollars including incidental costs not included in Items 94 and 95. This item includes all costs normally associated with the proposed structure improvement project. The total project cost will therefore usually be greater than the sum of Items 94 and 95.

The Improvement Total Project Cost is required for structures eligible for the Highway Bridge Program (see Item 131). It is not to be used to record estimated maintenance costs.

In the absence of any actual estimated total project costs, a guide of 150% of the bridge cost (Item 94) is suggested.

CODING INSTRUCTIONS

A six-digit field.

NOTE: Enter the base year of the cost estimate in Improvement Cost Estimate Year (Item 97)

ITEM DESCRIPTION

This item records the year upon which the estimated Bridge Roadway and Total Improvement Costs (recorded in Items 94, 95 and 96) were based.

The Improvement Cost Estimate Year and the estimated costs to which it applies must be reasonably current. Therefore, the date recorded shall be no more than 8 years old and the year cannot be greater than the current year.

CODING INSTRUCTIONS

A four-digit field.

ITEM DESCRIPTION

This item indicates the neighboring state that the structure serves in addition to Illinois.

CODING INSTRUCTIONS

A three-digit field.

Enter the applicable state code from the following list.

Leave blank if not applicable.

Code	State
185	Indiana
197	Iowa
214	Kentucky
297	Missouri
555	Wisconsin

Effective Date: 7/1/2016	ILLINOIS HIGHWAY INFORMATION SYSTEM Structure Information and Procedure Manual			
NBIS Required: Yes	Item Name	**BORDER BRIDGE ADJ. STATE % RESP.**	Item No.	**98B**
History Kept: No			Sheet	1 of 1
Structures	Highway On			
Update Screen	Inventory		SIMS Field Name	
SIMS Table(s)	SIMD001 & ISISSummaryStateandLocal		BorderRespPct	

ITEM DESCRIPTION

This item indicates the percentage of the existing bridge's total deck area for which the neighboring state is responsible.

The percentage will be used to determine each state's share of the funding needed for future improvements to the existing bridge.

CODING INSTRUCTIONS

A two-digit field.

ITEM DESCRIPTION

This item records the 15-digit NBIS structure number that the neighboring state has assigned to a structure it shares with Illinois.

Items 98A and 98B indicate that the structure is a border bridge and therefore an entry must be made in Border Bridge Adjacent State Structure Number (Item 99). This number must match exactly that which the neighboring state uses when reporting their structure inventory to Washington, D.C.
.

CODING INSTRUCTIONS

A fifteen-digit field.

Leave blank if not applicable.

Effective Date: 11/1/2018	ILLINOIS HIGHWAY INFORMATION SYSTEM Structure Information and Procedure Manual			
NBIS Required: Yes	Item Name	**SPECIAL SYSTEMS**	Item No.	**100**
History Kept: No			Sheet	1 of 1
Structures	Highway On/Under			
Update Screen	Key Routes		SIMS Field Name	
SIMS Table(s)	SIMD003/SIMD004 & ISISSummaryStateandLocal		DefenseHwyDesigOn/Un	

ITEM DESCRIPTION

This item indicates the applicable funding category for those public structures that are eligible for special funding.

This information is used to organize highway data by funding category.

CODING INSTRUCTIONS

DO NOT ENTER

This item is computer generated based on the roadway data at the point of Key Route linkage.

A one-digit field.

Code	Description
0	Does not apply
4	Strategic Highway Network (StraHNET)
5	National Forest Highway
6	National Forest development road or trail
7	Great River Road
8	Strategic Regional Arterial

NOTE: If a section of highway qualifies for more than one Special System, the lowest numeric value is displayed

Effective Date: 7/1/2016	ILLINOIS HIGHWAY INFORMATION SYSTEM Structure Information and Procedure Manual			
NBIS Required: Yes	Item Name	**PARALLEL STRUCT. DESIGNATION**	Item No.	**101**
History Kept: No			Sheet	1 of 1
Structures	All			
Update Screen	Inventory		SIMS Field Name	
SIMS Table(s)	SIMD001 & ISISSummaryStateandLocal		ParallelStructDesig	

ITEM DESCRIPTION

This item indicates situations where separate structures carry the same inventory route in opposite directions of travel over the same feature.

CODING INSTRUCTIONS

A one-digit field.

Code	Description
R	The right structure of parallel bridges carrying the roadway in the direction of inventory.
L	The left structure of parallel bridges. This structure carries traffic in the opposite direction of the inventory.
N	No parallel structure exists or a non-highway facility is carried on the structure.

EXAMPLE:

	Enter
Structure #1	R
Structure #2	L

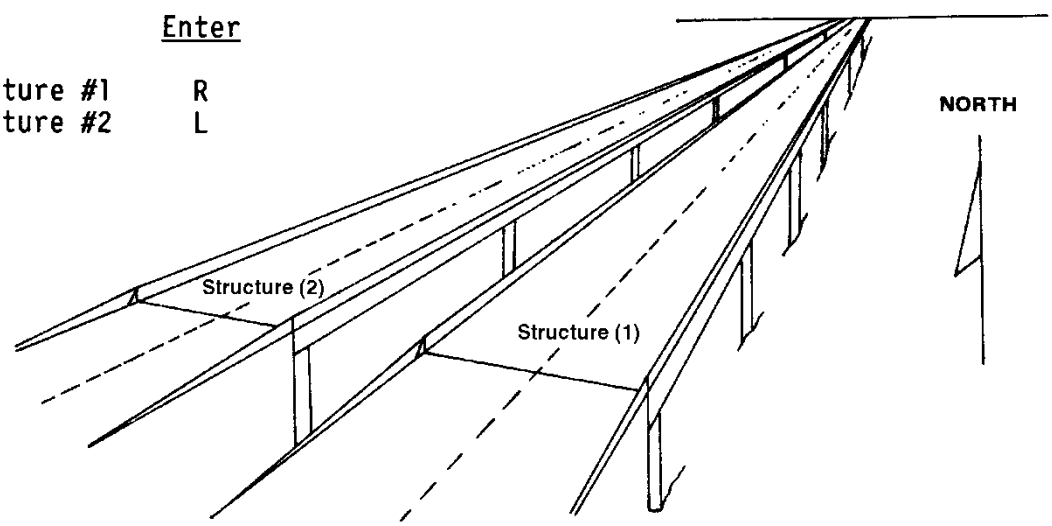

The Key Route's direction of inventory is north.

ITEM DESCRIPTION

This item indicates one or two-way traffic on the inventory route utilizing the structure.

Item 102 must be compatible with other traffic related items such as Average Daily Traffic (Item 29) and Bridge Roadway Width, Curb-to-Curb (Item 51).

CODING INSTRUCTIONS

A one-digit field.

Enter the appropriate code.

Code	Description
Leave Blank	Highway traffic not carried
1	1-way traffic
2	2-way traffic
3	One lane bridge with 2-way traffic

ITEM DESCRIPTION

This item indicates situations where temporary structures or conditions exist.

CODING INSTRUCTIONS

DO NOT ENTER (This item is computer generated for NBIS purposes only).

Calculation of this data item is based on Bridge Status (Item 41).

ITEM DESCRIPTION

This item indicates whether or not the structure is carrying or crossing a highway that is part of the National Highway System (NHS).

CODING INSTRUCTIONS

DO NOT ENTER

This item is computer generated based on the roadway data at the point of Key Route linkage.

A one-digit field.

Code	Description
0	Not National Highway System
1	National Highway System, not a NHS Connector
2	NHS Connector Major Airport
3	NHS Connector Major Port Facility
4	NHS Connector Major Amtrak Station
5	NHS Connector Major Rail/Truck Terminal
6	NHS Connector Major Intercity Bus Terminal
7	NHS Connector Public Transit or Multi-modal Passenger Terminal
8	NHS Connector Pipeline Terminal
9	NHS Connector Major Ferry Terminal

Effective Date: 7/1/2016	ILLINOIS HIGHWAY INFORMATION SYSTEM Structure Information and Procedure Manual			
NBIS Required: Yes	Item Name	**RECONSTRUCTION YEAR**	Item No.	**106**
History Kept: Yes			Sheet	1 of 1
Structures	All			
Update Screen	COMPUTER GENERATED – N/A		SIMS Field Name	
SIMS Table(s)	ISISSummaryStateandLocal		RConstrYear	

ITEM DESCRIPTION

This item records the latest year of construction for the structure.

Item 106 is extracted from Item 27A (Construction Year) and reported to FHWA as the latest year of reconstruction. It appears on the data base as the last year of construction in Item 27A when Item 27 - Original/Maintenance/Reconstruction Indicator has been coded "R" for Reconstruction.

CODING INSTRUCTIONS

DO NOT ENTER (This item is computer generated for NBIS purposes only).

ITEM DESCRIPTION

This item records the type of deck system on the structure.

If more than one type of system exists on the structure, identify the most predominant.

CODING INSTRUCTIONS

A one-digit field.

Code	Description
A	Cast-in-place Concrete normally formed
B	Cast-in-place Concrete PPC Deck Plank Formed
C	Cast-in-place Concrete Steel Stay in place Forms
D	Precast Reinforced Concrete Deck Beams
E	Precast Prestressed Concrete Deck Beams
F	Precast Concrete transverse Deck Panels
G	Open Steel Grating
H	Concrete Filled Steel Grating
I	Steel plate (includes orthotropic)
J	Corrugated Steel Form and Asphalt
K	Aluminum
L	Timber
M	Other
N	Not Applicable

NOTE: Enter code “N” for filled culverts

ITEM DESCRIPTION

This item indicates, in inches, the thickness of the predominant Deck Structure Type (Item 107) on the structure.

This item reports the structural portion of the deck thickness as originally built and does not include built up wearing surface thickness. Deck Structure Thickness is most easily obtained from construction plans but should also be measurable in the field.

Measurements for Deck Structure Thickness (Item 107A) and Total Deck Thickness (Item 108D) must be obtained from the same location on the structure.

CODING INSTRUCTIONS

A three-digit field, with one decimal position.

Leave blank when Deck Structure Type (Item 107) is coded "N".

EXAMPLES:

Deck Type	Deck Thickness	Entry
Cast-in-Place Slab	7"	07.0
Cast-in-Place Slab	12.25"	12.3
27" x 36' PPC Deck Beam	27"	27.0
18" x 3'9" Precast Channel Beams with 5" Slab & 2" Overlay	5"	05.0
Timber Plank (3.5" x 10") with 2.5" Thick Runners	3.5"	03.5

ITEM DESCRIPTION

This item provides information concerning the wearing surface and protective system of the bridge deck.

Item 108 is composed of the three segments (Item 108A, Item 108B and Item 108C), each1 digit in length, which are described and reported separately. Code Item 108 as follows:

Segment	Description	Length
108A	Type of Wearing Surface	1 digit
108B	Type of Membrane	1 digit
108C	Deck Protection	1 digit

History is retained based on each new Inspection Date (Item 90) entered.

CODING INSTRUCTIONS

This item is computer generated from the three segments to satisfy FHWA requirements.

The values entered for Items 108A, 108B and 108C comprise the 3-digit Item 108 code.

ITEM DESCRIPTION

This item identifies the predominant type of wearing surface on the structure visible on the top of the deck.

History is retained for each Inspection Date (Item 90) entered.

CODING INSTRUCTIONS

A one-digit field.

Code	Description
A	Bare Deck - No Overlay
B	Additional Unreinforced Concrete Overlay - not a special mix
C	Latex Modified Concrete Overlay
D	Low Slump Concrete Overlay
E	Plasticized Dense Concrete Overlay
F	Micro Silica Concrete Overlay
G	Bituminous Overlay
H	Asbestos Asphalt Overlay
I	Asphalt Block
J	Timber or Timber Runners
K	Gravel – Macadam (Oil & Chip)
L	Other
M	Epoxy Overlay
P	Grating
Q	High Reactivity Metakaolin Concrete
R	Additional Concrete Overlay – Reinforced
S	Ground Granulated Blast-Furnace Slag Concrete Overlay
T	Fly Ash Concrete Overlay
N	Not Applicable (applies only to structures with no deck)

Effective Date: 7/1/2016	ILLINOIS HIGHWAY INFORMATION SYSTEM Structure Information and Procedure Manual			
NBIS Required: Yes	Item Name	**TYPE OF MEMBRANE**	Item No.	**108B**
History Kept: Yes			Sheet	1 of 1
Structures	Highway On			
Update Screen	Routine		SIMS Field Name	
SIMS Table(s)	SIMD002 & ISISSummaryStateandLocal		WearSurfMembrType	

ITEM DESCRIPTION

This item identifies the type of membrane utilized in the deck protective system between the wearing surface and the deck structure.

History is retained for each Inspection Date (Item 90) entered.

CODING INSTRUCTIONS

A one-digit field.

Enter the appropriate code as follows:

Code	Description
A	Waterproofing Membrane System (Section 581)
B	Other Preformed Fabric System
C	Epoxy
D	Unknown
E	Other
F	None
G	Waterproofing Membrane for Railroad Structures (Section 580)
H	Asbestos Waterproofing Membrane System
I	Spray Applied Waterproofing Membrane
J	Sheet Waterproofing Membrane
N	Not applicable (applies only to structures with no deck)

ITEM DESCRIPTION

This item identifies the type of deck protection utilized within the deck structure.

History is retained for each Inspection Date (Item 90) entered.

CODING INSTRUCTIONS

A one-digit field.

Enter the appropriate code as follows:

Code	Description
A	Epoxy Coated Reinforcing
B	Galvanized Reinforcing
C	Other Coated Reinforcing
D	Cathodic Protection
F	Polymer Impregnated Concrete
G	Internally Sealed Concrete
H	Unknown
I	Other
J	None
N	Not Applicable (applies only to structures with no deck)

Effective Date: 11/1/2018	ILLINOIS HIGHWAY INFORMATION SYSTEM Structure Information and Procedure Manual			
NBIS Required: No	Item Name	**TOTAL DECK THICKNESS**	Item No.	**108D**
History Kept: Yes			Sheet	1 of 1
Structures	Highway On			
Update Screen	Routine		SIMS Field Name	
SIMS Table(s)	SIMD002 & ISISSummaryStateandLocal		DeckThicknessTotal	

ITEM DESCRIPTION

This item describes the total thickness of the structure's deck and includes the structural deck and the wearing surface above the top of deck support.

The total deck thickness can be determined by comparing the vertical positions of the top and bottom of the deck relative to a common reference point.

This measurement must be taken at the same location on the deck as the measurement for Item 107A – Deck Structure Thickness is taken. General guidelines for measurement location on various structure types are as follows:

Concrete Slab Bridge - Measure along the edge of the deck or, when a curb is present, along the curbline. When the slab is haunched, its thickness should be taken at the midpoint of the longest span.

Deck Supported by Stringers or Girders - Measure inside the flange of the fascia beam or, when a curb exists and is inside the fascia beam, along the curbline.

If the value of this item has increased since the last inspection and the structure has not been rated for load carrying capacity since that inspection, contact the Bureau of Bridges & Structures.

History is retained for each Inspection Date (Item 90) entered.

.

CODING INSTRUCTIONS

A three-digit field, with one decimal position.

EXAMPLES:

Deck Type	Deck Thickness	Entry
7" Concrete Slab w/No Overlay	7"	07.0
6" Concrete Slab w/2.25" Overlay	8.25"	08.3
27" x 36" PPC Deck Beam w/3.5" Overlay	30.5"	30.5
18" x 3'9" Precast Channel Beams w/5" Slab & 2" Overlay	7"	07.0
Timber Plank (3.5" x 10") w/2.5" Thick Runners	6"	06.0

NOTE: This item is optional for culverts

ITEM DESCRIPTION

This item describes Truck Traffic as a percentage of Annual Average Daily Traffic (Item 29). Do not include vans, pickup trucks and other light delivery trucks in this percentage.

CODING INSTRUCTIONS

DO NOT ENTER

This item is computer generated based on the roadway data at the point of Key Route linkage.

A two-digit field.

NOTE: Estimated Truck Percentage (Item 109) is calculated by dividing the AADT (Item 29) by the Average Daily Heavy Commercial Volume value (IRIS Item 75).

Effective Date: 7/1/2016	ILLINOIS HIGHWAY INFORMATION SYSTEM Structure Information and Procedure Manual			
NBIS Required: Yes	Item Name	**DESIGNATED TRUCK ROUTE**	Item No.	**110**
History Kept: No			Sheet	1 of 1
Structures	Highway On/Under			
Update Screen	Key Routes		SIMS Field Name	
SIMS Table(s)	SIMD003/SIMD004 & ISISSummaryStateandLocal		DesigTruckRteOn/Un	

ITEM DESCRIPTION

This item identifies a system of highways approved for travel of tractor/semitrailer loads of 80,000 pounds and specified wheelbases. This information is used by the trucking industry to safely move vehicles with legal size loads.

CODING INSTRUCTIONS

DO NOT ENTER

This item is computer generated based on the roadway data at the point of Key Route linkage.

A one-digit field.

Code			Description
0	Not on a designated truck route - not a parkway.		
1	Class 1	-	approved for all load widths of 8 foot 6 inches or less.
2	Class II	-	approved for all load widths of 8 foot 6 inches or less and a wheel base no greater than 55 feet.
3	Class III	-	approved for all load widths of 8 foot 0 inches or less and a wheel base no greater than 55 feet.
4	Parkway	-	an arterial highway for non-commercial traffic, with full or partial access control and usually located within a park or a ribbon of park-line developments. (Currently ONLY a portion of Lake Shore Drive in Cook County is a designated Parkway).

ITEM DESCRIPTION

This item indicates the presence and adequacy of pier and/or abutment barge or boat traffic protection features such as fenders, protection cells, etc.

The condition of the bridge protection devices may be a factor in the overall evaluation of Substructure Condition (Item 60).

History is retained on this item per each Inspection Date (Item 90).

CODING INSTRUCTIONS

A one-digit field.

Enter a value according to the following table:

Code	Description
1	Navigation protection not required
2	In place and functioning
3	In place but in a deteriorated condition
4	In place but reevaluation of design suggested
5	None present but reevaluation suggested
N	Not Applicable

NOTE: If Item 38 - Navigation Control has been coded "0" (zero) or "N", code Item 111 – Pier Navigation Protection as "N" to indicate "Not Applicable."

ITEM DESCRIPTION

This item reports the measurement that determines whether or not the structure meets the minimum length criteria to be designated as a bridge for NBIS purposes.

The following definition of a bridge is used by the American Association of State Highway and Transportation Officials (AASHTO) and is given in the NBIS:

"A structure including supports erected over a depression or an obstruction, such as water, highway, or railway, and having a track or passageway for carrying traffic or other moving loads, and having a opening measured along the center of the roadway of more than 20 feet between under copings of abutments or spring lines of arches, or extreme ends of openings for multiple boxes; it may also include multiple pipes, where the clear distance between openings is less than half of the smaller contiguous opening."*

NOTE: The under coping of an abutment is the point where the bridge bearing seat intersects the front face (usually nearly vertical) of the abutment. Where there is a distinct abutment pile cap, it is the point of intersection on the abutment wall or piling with the cap.

Refer to Appendix C, Figure 3.1

CODING INSTRUCTIONS

A three-digit field, with one decimal position.

Enter the appropriate length for all bridges in feet and tenths.

For spans of 100 feet or more, enter 99.9

If the opening is measured to any fraction between 20 feet and 20 feet, one inch, enter 20.1

EXAMPLES:

Measurement	Enter
52' 3"	52.3
121' 5"	99.9
20' ½"	20.1
12' 9"	12.8

ITEM DESCRIPTION

The purpose of this item is to identify the current status of the bridge regarding its vulnerability to scour.

A scour critical bridge is one with abutment or pier foundations which are rated as unstable due to (1) observed scour at the bridge site, or (2) a scour potential as determined from a scour evaluation study. Details on conducting a scour evaluation are included in the FHWA Technical Advisory - T5140.20, "Scour at Bridges", and Hydraulic Engineering Circular #18 (HEC 18).

For foundations on rock where scour cannot be calculated, use the coding most descriptive of site conditions.

The evaluation of this item is unrelated to the rating Substructure Condition (Item 60) unless it is based on actual scour that is presently affecting the structure.

History is retained for this item based on each Scour Critical Analysis Date (Item 113A).

CODING INSTRUCTIONS

A one-digit field.

Enter the appropriate code for all structures crossing a waterway. For structures not crossing a waterway, this item is not coded.

Code	Description
9	Bridge foundations (including piles) well above flood water elevations.
8	Bridge foundation determined to be stable for the assessed or calculated scour conditions. Assessed or calculated scour is above top of footing (Example A), or six (6) feet or less of assessed or calculated scour occurring at a pile bent substructure with adequate support remaining after scour. The following apply: • Properly designed countermeasures installed to prevent scour from accessing footing or adversely affecting pile bent substructure (see HEC 23 Bridge Scour & Stream Instability Counter Measures). • Structure assessed as stable for scour and not requiring scour analysis (foundations on competent rock and closed bottom culverts with the ability to resist scour for expected service life of the bridge).

CODING INSTRUCTIONS (cont.)

Code	Description
7	Countermeasures installed to mitigate an existing problem with scour and to reduce the risk of bridge failure during a flood event. Instructions contained in a plan of action have been implemented to reduce the risk to users from a bridge failure and to ensure the adequacy of the countermeasures during or immediately after a flood event. Item 93B5 should be coded accordingly.
6	Scour calculation/evaluation has not been made. (Code “6” is used only to describe cases where a structure has not yet been evaluated for scour potential).
5	Bridge foundation determined by the evaluation team to be stable for assessed or calculated scour conditions. Scour is determined to be within the limits of footing or piles (Example B), or more than six (6) feet of assessed or calculated scour occurring at a pile bent substructure with adequate support remaining after scour. The following apply: • Properly designed countermeasures installed to prevent scour from accessing footing or adversely affecting pile bent substructure (see HEC 23). • Structure assessed as stable for scour and not requiring scour analysis (foundations on rock with ability to resist scour for expected service life of the bridge).
4	Bridge foundation determined by the evaluation team to be stable for assessed or calculated scour conditions. Field review indicates action is required to protect exposed foundations (see HEC 23).
3	Bridge is scour critical. Bridge foundations determined by the scour evaluation to be unstable for assessed or calculated scour conditions. One of the following is applicable: • Scour is determined to be within the limits of footing or piles (Example B), or more than six (6) feet of assessed or calculated scour occurring at a pile bent substructure with inadequate support remaining after scour. • Scour is determined to be below spread footing or piles tips (Example C).
2	Bridge is scour critical. Field review indicates that extensive scour has occurred at bridge foundations, which are determined to be unstable by one of the following: • A comparison of calculated scour and observed scour during the bridge inspection. • An engineering evaluation of the observed scour condition reported by the bridge inspector in Item 60.

CODING INSTRUCTIONS (cont.)

Code	Description
1	Bridge is scour critical. Field review indicates that failure of pier/abutments is imminent. Bridge is closed to traffic. Failure is imminent based on one of the following: • A comparison of calculated scour and observed scour during the bridge inspection. • An engineering evaluation of the observed scour condition reported by the bridge inspector in Item 60.
0	Bridge is scour critical. Bridge has failed and is closed to traffic.

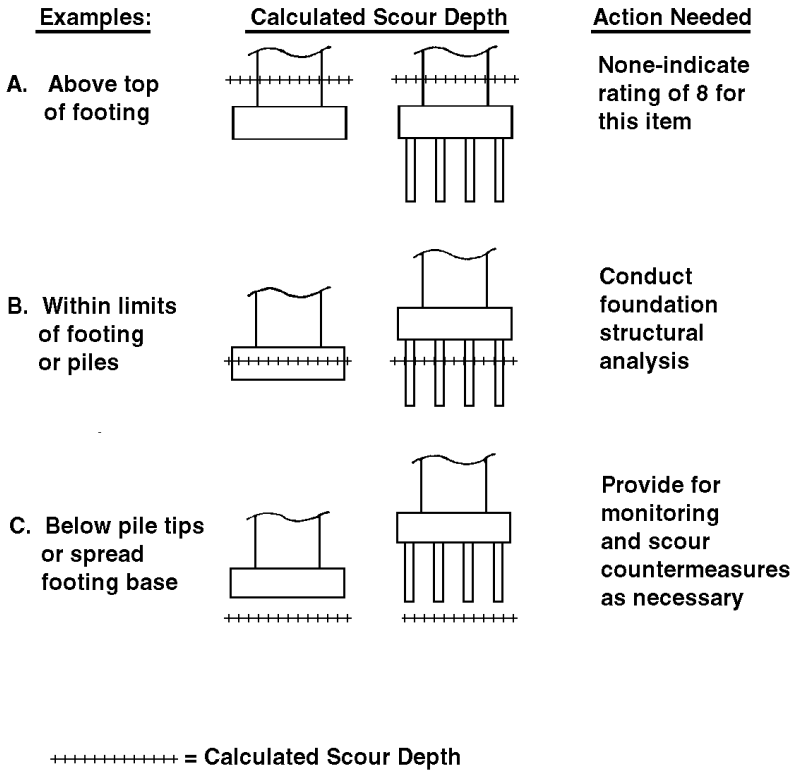

Effective Date: 7/1/2016	ILLINOIS HIGHWAY INFORMATION SYSTEM Structure Information and Procedure Manual			
NBIS Required: No	Item Name	**SCOUR CRITICAL ANALYSIS DATE**	Item No.	**113A**
History Kept: Yes			Sheet	1 of 1
Structures	Highway On			
Update Screen	Scour Analysis		SIMS Field Name	
SIMS Table(s)	SIMD014 & ISISSummaryStateandLocal		ScourEvalDate	

ITEM DESCRIPTION

This item records the date the Scour Critical Evaluation (Item 113) for the structure was performed.

History is retained by this date for each of the items on the Scour Analysis screen.

CODING INSTRUCTIONS

A ten-digit field (standard date format xx/xx/xxxx).

ITEM DESCRIPTION

This item indicates the evaluation method used when performing the Scour Critical Evaluation (Item 113) for the structure.

History is retained for this item based on each Scour Critical Analysis Date (Item 113A)

CODING INSTRUCTIONS

A one-digit field.

Enter the appropriate code as listed below:

Code	Description
A	Determined by calculation
B	Determined by rational analysis
C	Unknown foundation
D	Evaluation in progress

Effective Date: 7/1/2016	ILLINOIS HIGHWAY INFORMATION SYSTEM Structure Information and Procedure Manual			
NBIS Required: No	Item Name	**SCOUR CRITICAL ANALYSIS BY**	Item No.	**113C**
History Kept: Yes			Sheet	1 of 1
Structures	Highway On			
Update Screen	Scour Analysis		SIMS Field Name	
SIMS Table(s)	SIMD014 & ISISSummaryStateandLocal		ScourEvalBy	

ITEM DESCRIPTION

This item identifies the individual or office that had principal responsibility for the subject analysis.

History is retained for this item based on each Scour Critical Analysis Date (Item 113A).

CODING INSTRUCTIONS

A unlimited field.

Begin entry at the first space provided using any combination of letters, numbers, symbols and spaces. Abbreviations can be used as long as they are not ambiguous.

ITEM DESCRIPTION

This item records any miscellaneous remarks about the scour critical analysis that need to be made to clarify or document values or procedures. This space is also provided to record recommended corrective action and all follow-up actions.

History is retained for this item based on each Scour Critical Analysis Date (Item 113A).

CODING INSTRUCTIONS

A unlimited field.

Begin entry at the first space provided using any combination of letters, numbers, symbols and spaces. Abbreviations can be used as long as they are not ambiguous.

ITEM DESCRIPTION

This item provides the forecasted (projected) Annual Average Daily Traffic (AADT) for the identified inventory route.

This information shall be projected by District Traffic personnel based on traffic trend data available. If planning data is not available, the best estimate based on site familiarity will be used.

Future AADT must be compatible with current AADT (Item 29) since Future AADT is a forecast of the current AADT as recorded in Item 29 for each inventory route ON or UNDER the structure

CODING INSTRUCTIONS

A six-digit field.

EXAMPLES:

Future AADT	Code
540	540
15,600	15600
240,000	240000

Effective Date: 7/1/2016	ILLINOIS HIGHWAY INFORMATION SYSTEM Structure Information and Procedure Manual			
NBIS Required: Yes	Item Name	**FUTURE AADT YEAR**	Item No.	**115**
History Kept: No			Sheet	1 of 1
Structures	Highway On/Under			
Update Screen	Key Routes		SIMS Field Name	
SIMS Table(s)	SIMD003/SIMD004 & ISISSummaryStateandLocal		AADTFutureYrOn/Un	

ITEM DESCRIPTION

This item identifies the year represented by the Future AADT (Item 114).

The projected year of Future AADT shall be at determined by District Traffic personnel based on traffic trend data available.

CODING INSTRUCTIONS

A four-digit field.

Code the year of the Future AADT.

ITEM DESCRIPTION

This item provides the minimum vertical clearance imposed at the site as measured above a datum that is specified on a navigation permit issued by a control agency.

This clearance is only for a vertical lift bridge in the dropped or closed position and reported to the last full foot.

The vertical clearance in the open or raised position is recorded in Navigation Vertical Clearance (Item 39).

CODING INSTRUCTIONS

DO NOT ENTER (This item is computer generated for NBIS purposes only).

ITEM DESCRIPTION

This item logs the date and time that a microfilm record was added to the database.

The item is used internally by the system to define a record as unique.

The system can accept an unlimited number of records for each structure.

CODING INSTRUCTIONS

DO NOT ENTER.

ITEM DESCRIPTION

This item indicates the number that identifies a microfilmed set of bridge documents.

CODING INSTRUCTIONS

A unlimited field.

Begin entry at the first space provided using any combination of letters, numbers, symbols and spaces. Abbreviations can be used as long as they are not ambiguous.

ITEM DESCRIPTION

This item indicates the IDOT Agency and Bureau that ordered the microfilming.

CODING INSTRUCTIONS

A one-digit field.

Enter the appropriate code as listed below (Item 123A):

Code	Agency
0	Central Office
1-9	District

A one-digit field.

Enter the appropriate code as listed below (Item 123B):

Code	Bureau
B	Bridges
C	Construction
D	Design
L	Local Roads
M	Maintenance
P	Planning

ITEM DESCRIPTION

This item identifies the type of documents that were microfilmed.

CODING INSTRUCTIONS

A one-digit field.

Enter the appropriate code as listed below:

Code	Type of Plans
0	Other
1	As-Built Plans
2	Design Plans
3	Fabrication Plans
4	Correspondence
5	Computations (Original)
6	Computations Rehabilitation
7	Shop Plans

ITEM DESCRIPTION

This item allows for special notes or remarks for the microfilmed set of plans.

CODING INSTRUCTIONS

A unlimited field.

Begin entry at the first space provided using any combination of letters, numbers, symbols and spaces. Abbreviations can be used as long as they are not ambiguous.

ITEM DESCRIPTION

This item indicates the first frame number which contains information about the microfilmed bridge.

CODING INSTRUCTIONS

A four-digit field.

ITEM DESCRIPTION

This item indicates the last frame number which contains information about the microfilmed bridge.

CODING INSTRUCTIONS

A four-digit field.

ITEM DESCRIPTION

The sufficiency rating is a numeric value that is a result of a method used to evaluate data by calculating four different factors: (1) Structural Adequacy and Safety; (2) Serviceability and Functional Obsolescence; (3) Essentiality for Public Use; and (4) Special Reductions (based on certain limiting features).

This value is a percentage which is indicative of the bridge's sufficiency to remain in service. It is expressed as a percentage in which 100 percent represents an entirely sufficient bridge and zero percent represents an entirely insufficient or deficient bridge.

NOTE: Only those structures carrying a highway receive a sufficiency rating

CODING INSTRUCTIONS

DO NOT ENTER

This item is computer generated through a formula that evaluates nineteen of the Inventory, Inspection and Appraisal Items.

A four-digit field, with one decimal position.

See the next page for a summary of the Sufficiency Rating factors.

Summary of Sufficiency Rating Factors

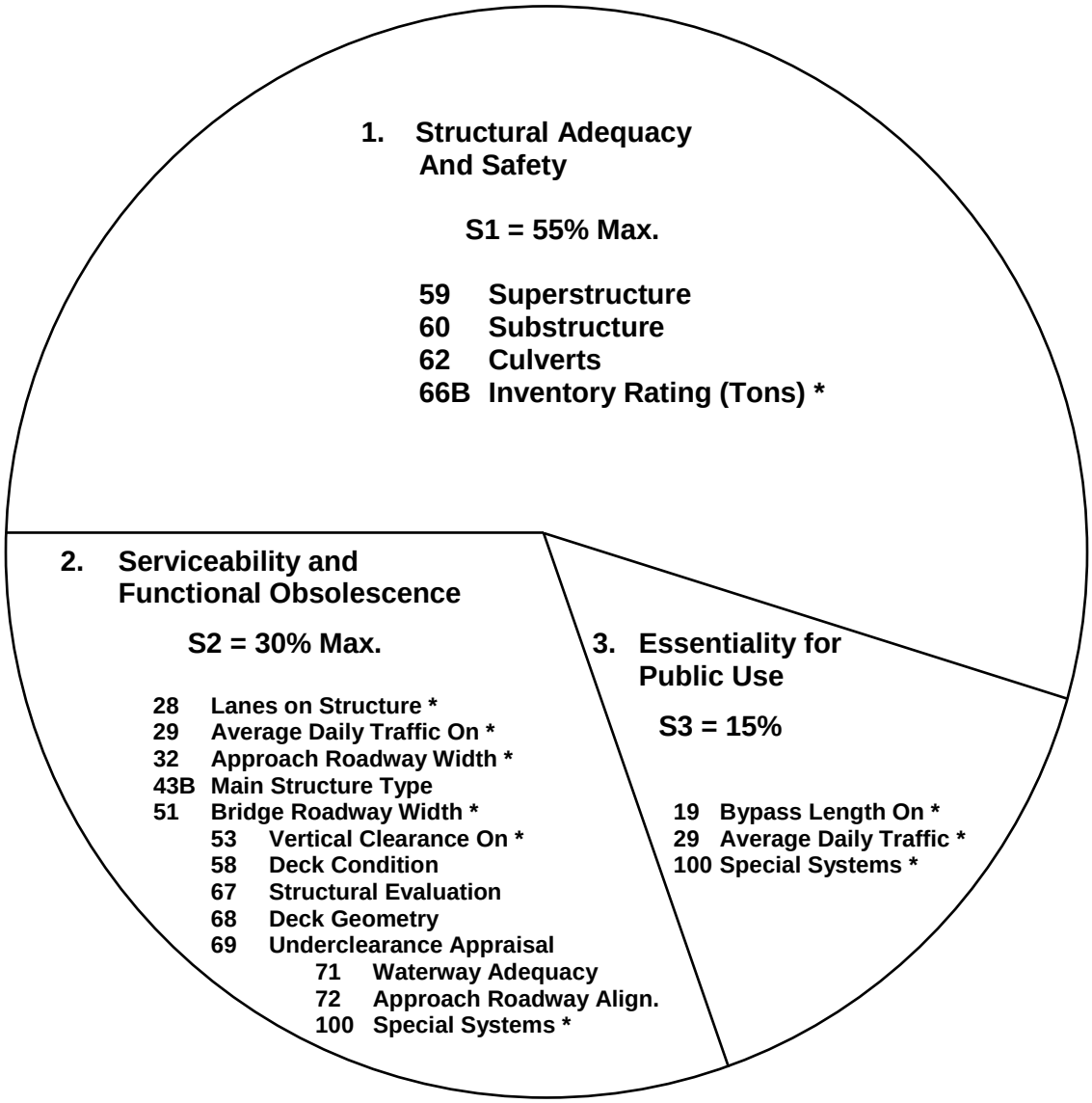

4. Special Reductions

S4 = 13% Max.

19 Bypass Length On *
36 Traffic Safety Features *
43B Main Structure Type

Sufficiency Rating = S1 + S2 + S3 – S4

Sufficiency Rating shall not be less than 0% nor greater than 100%

NOTE: If the value is not coded for any of these items, the Sufficiency Rating value will be preceded by an asterisk (*)

Effective Date: 7/1/2016	ILLINOIS HIGHWAY INFORMATION SYSTEM Structure Information and Procedure Manual			
NBIS Required: No	Item Name	**STP-BRIDGE ELIGIBILITY**	Item No.	**131**
History Kept: No			Sheet	1 of 2
Structures	Highway On			
Update Screen	COMPUTER GENERATED – Appraisals		SIMS Field Name	
SIMS Table(s)	SIMD001 & ISISSummaryStateandLocal		HBRRPEligibility	

ITEM DESCRIPTION

This item indicates whether or not a structure is eligible to be rehabilitated or replaced utilizing monies allocated from STP-Bridge funds. See the Eligibility Table on the next page for qualifying criteria.

CODING INSTRUCTIONS

DO NOT ENTER

This item is computer generated through the criteria explained in the “Eligibility Table” on Item 131 (Sheet 1 of 2).

A “Yes/No” text field.

ELIGIBILITY TABLE

Classification of Bridge Deficiency

Structurally Deficient

1. A condition rating of 4 or less for:
   Item 58 – Deck; or
   Item 59 – Superstructure; or
   Item 60 – Substructure; or
   Item 62 – Culvert

or 2. An appraisal rating of 2 or less for:
   Item 67 – Structural Evaluation; or
   Item 71 – Waterway Adequacy

Functionally Obsolete

1. An appraisal rating of 3 or less for:
   Item 68 – Deck Geometry; or
   Item 69 – Underclearance; or
   Item 72 – Approach Roadway Alignment

or 2. An appraisal rating of 3 for:
   Item 67 – Structural Evaluation
   Item 71 – Waterway Adequacy

Any structure meeting one or more of the above deficiencies and having a Sufficiency Rating of 80.0 or less is eligible for HBP funding.

Structures having a Sufficiency Rating of 50.0 to 80.0 are only eligible for rehabilitation, whereas those having a rating of less than 50.0 are eligible for either replacement or rehabilitation.

Those bridges which may be classified as deficient or obsolete but having a sufficiency rating greater than 80.0 are not eligible for funding.

NOTE: A structure will not qualify for STP-Bridge eligibility if it has been originally built or reconstructed in the last ten years

Effective Date: 7/1/2016	ILLINOIS HIGHWAY INFORMATION SYSTEM Structure Information and Procedure Manual			
NBIS Required: No	Item Name	**LAST UPDATE DATE**	Item No.	**132**
History Kept: No			Sheet	1 of 1
Structures	All			
Update Screen	COMPUTER GENERATED – N/A		SIMS Field Name	
SIMS Table(s)	SIMD001		LastUpdateDate	

ITEM DESCRIPTION

This item indicates the last date any structure data item was updated on the Illinois Structure Information System (ISIS). The date changes at the same time the change to a data item is made.

Only changes made through ISIS or extracted from IRIS will effect a change in this item.

CODING INSTRUCTIONS

DO NOT ENTER

ITEM DESCRIPTION

Structures are structurally deficient if the ratings fall into the following criteria.

A condition rating of 4 or less for:

Item 58 – Deck; or
Item 59 – Superstructure; or
Item 60 – Substructure; or
Item 62 – Culvert; or

CODING INSTRUCTIONS

DO NOT ENTER

This item is computer generated through the criteria explained above.

A “Yes/No” text field.

ITEM DESCRIPTION

Structures are functionally obsolete if they have deck geometry, load carrying capacity, clearance or approach roadway alignment that no longer meet the criteria for the roadway system of which the structure is part.

An appraisal rating of 3 or less for:

Item 68 – Deck Geometry; or
Item 69 – Underclearances; or
Item 72 – Approach Roadway Alignment; or

An appraisal rating of 3 for:

Item 67 – Structural Evaluation; or
Item 71 – Waterway Adequacy

CODING INSTRUCTIONS

DO NOT ENTER

This item is computer generated through the criteria explained above.

A “Yes/No” text field.

ITEM DESCRIPTION

This item displays deck area of the structure in square feet.

Square Footage:

Bridges & Culverts – Structure Length (Item 49) * Deck Width (Item 52)

Culverts Under Fill – Structure Length (Item 49) * Approach Roadway Width (Item 32)

CODING INSTRUCTIONS

DO NOT ENTER

This item is computer generated through the criteria explained above.

ITEM DESCRIPTION

Item 500 identifies the Team Section in which the bridge is located.
Item 500A identifies the Team Subsection in which the bridge is located.

A few structures exist which are maintained by two Team Sections, with one Team Section maintaining the upper part of the structure and the other maintaining the lower part. Therefore, the structure is located in two different Team Sections and Subsections. Items 500 and 500A are used to identify the location of the Team Section and Subsection of the upper part of the structure. Items 501 and 501A, Under Team Section and Subsection, should have the Team Section and Subsection entered for the location of the lower part of the structure.

To report <u>any</u> work performed on the structure, an entry has to be made into Maintenance Team Section & Subsection Over.

CODING INSTRUCTIONS

Each item is a three-digit alphanumeric field.

Enter the Team Section and Subsection in the appropriate fields.

ITEM DESCRIPTION

This item records the Team Section and Subsection information for a structure that is maintained by two Team Sections. Specifically, this item is used to identify the Team Section and Subsection in which the lower part of the structure is located.

CODING INSTRUCTIONS

Each item is a three-digit alphanumeric field.

Enter the Team Section and Subsection in the appropriate fields.

Leave blank when a structure is maintained by only one Team Section.

Effective Date: 7/1/2016	ILLINOIS HIGHWAY INFORMATION SYSTEM Structure Information and Procedure Manual			
NBIS Required: No	Item Name	**OVER/ONLY MAINTENANCE BY**	Item No.	**502**
History Kept: No			Sheet	1 of 1
Structures	State Maintained Only			
Update Screen	Inventory		SIMS Field Name	
SIMS Table(s)	SIMD027		MaintRespOnlyOver	

ITEM DESCRIPTION

This item identifies the agency (other than IDOT) that has any maintenance responsibility for any portion of the superstructure. This item is to be left blank if the "OVER/ONLY" Maintenance responsibility belongs entirely to IDOT.

CODING INSTRUCTIONS

A unlimited text field.

Enter the literal description of the responsible agency (other than IDOT) beginning at the first space available, using any combination of letters, numbers, symbols and punctuation as necessary.

Abbreviations can be used as long as they are not ambiguous.

Punctuation can be omitted as long as it does not alter the context.

Leave blank if not applicable.

ITEM DESCRIPTION

This item indicates the type of waterproofing on the structure.

CODING INSTRUCTIONS

A one-digit field.

Enter the appropriate code from the list below:

Code	Description
M	Membrane Waterproofing
W	Other Type Waterproofing
E	Epoxy-Coated Rebars with no Waterproofing
N	No Waterproofing System without Epoxy-Coated Rebars

ITEM DESCRIPTION

This item identifies the inspector's route number that has been assigned to the structure. This enables the grouping of specific structures into an efficient inspection route.

CODING INSTRUCTIONS

A unlimited text field.

Effective Date: 7/1/2016	ILLINOIS HIGHWAY INFORMATION SYSTEM Structure Information and Procedure Manual			
NBIS Required: No	Item Name	**NUMBER OF NAVIGATIONAL LIGHTS**	Item No.	**519**
History Kept: No			Sheet	1 of 1
Structures	State Maintained Only			
Update Screen	Inventory		SIMS Field Name	
SIMS Table(s)	SIMD027		NumberOfNavigationalLights	

ITEM DESCRIPTION

This item indicates the number of navigational lights attached to the structure.

CODING INSTRUCTIONS

A three-digit field.

Leave blank if not applicable.

EXAMPLE:

Structure has six navigation lights attached.

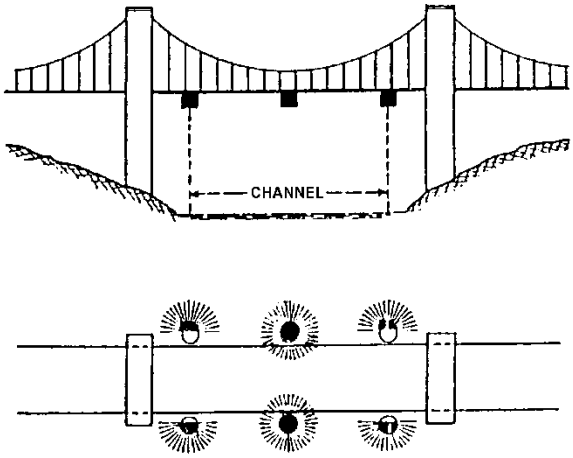

Effective Date: 7/1/2016	ILLINOIS HIGHWAY INFORMATION SYSTEM Structure Information and Procedure Manual			
NBIS Required: No	Item Name	**NUMBER OF IMPACT ATTENUATORS**	Item No.	**520**
History Kept: No			Sheet	1 of 1
Structures	State Maintained Only			
Update Screen	Inventory		SIMS Field Name	
SIMS Table(s)	SIMD027		NumberOfImpactAttenuators	

ITEM DESCRIPTION

This item indicates the number of impact attenuators associated with the structure.

CODING INSTRUCTIONS

A three-digit field.

Leave blank if not applicable.

Count individual sand-filled units separately. Integral units, like multi-cell anti-freeze attenuators or collapsible steel attenuators, should be considered as single units.

ITEM DESCRIPTION

This item indicates the number of pier protection cells guarding the bridge from river traffic.

CODING INSTRUCTIONS

A three-digit field.

Leave blank if not applicable.

ITEM DESCRIPTION

This item allows the recording of any special information or data that would not fit the space available regarding the features primarily of MMI interest.

CODING INSTRUCTIONS

A unlimited text field.

Enter appropriate comments beginning at the first space available using any combination of letters, numbers, symbols and spaces. Abbreviations can be used as long as they are not ambiguous.

APPENDIX A

MUNICIPALITY LIST

Hard Copies Uncontrolled

MUNICIPALITY LIST

Code	Municipality	Code	Municipality
0005	ABINGDON	0260	ATLANTA
0010	ADDIEVILLE	0265	ATWOOD
0015	ADDISON	0270	AUBURN
0020	ADELINE	0275	AUGUSTA
0025	ALBANY	0280	AURORA
0030	ALBERS	0285	AVA
0035	ALBION	0290	AVISTON
0040	ALEDO	0295	AVON
0045	ALEXIS	0300	BALDWIN
0050	ALGONQUIN	0305	BANNER
0055	ALHAMBRA	0310	BANNOCKBURN
0060	ALLENDALE	0315	BARDOLPH
0065	ALLENVILLE	0320	BARRINGTON
0070	ALLERTON	0323	BARRINGTON HILLS
0075	ALMA	0330	BARRY
0080	ALORTON	0335	BARTELSO
0085	ALPHA	0340	BARTLETT
0090	ALSEY	0345	BARTONVILLE
0095	ALSIP	0350	BASCO
0100	ALTAMONT	0355	BATAVIA
0115	ALTON	0360	BATCHTOWN
0117	ALTONA	0365	BATH
0120	ALTO PASS	0366	BAYLIS
0125	ALVAN /ALVIN	0367	BAYVIEW GARDENS
0130	AMBOY	0368	BEACH PARK
0133	ANCHOR	0375	BEARDSTOWN
0135	ANDALUSIA	0380	BEAVERVILLE
0145	ANDOVER	0385	BECKEMEYER
0150	ANNA	0390	BEDFORD PARK
0155	ANNAWAN	0395	BEECHER
0160	ANTIOCH	0397	BEECHER CITY
0165	APPLE RIVER	0405	BELGIUM
0170	ARCOLA	0410	BELKNAP
0175	ARENZVILLE	0420	BELLE PRAIRIE CITY
0180	ARGENTA	0425	BELLE RIVE
0187	ARLINGTON	0430	BELLEVILLE
0190	ARLINGTON HEIGHTS	0435	BELLEVUE
0195	ARMINGTON	0437	BELLFLOWER
0200	AROMA PARK	0440	BELLMONT
0205	ARROWSMITH	0445	BELLWOOD
0210	ARTHUR	0450	BELVIDERE
0215	ASHKUM	0455	BEMENT
0220	ASHLAND	0460	BENLD
0225	ASHLEY	0465	BENSENVILLE
0230	ASHMORE	0470	BENSON
0235	ASHTON	0475	BENTLEY
0240	ASSUMPTION	0480	BENTON
0245	ASTORIA	0485	BERKELEY
0250	ATHENS	0490	BERLIN
0255	ATKINSON	0495	BERWYN

Hard Copies Uncontrolled

MUNICIPALITY LIST

Code	Municipality	Code	Municipality
0500	BETHALTO	0730	BULPITT
0505	BETHANY	0735	BUNCOMBE
0510	BIGGSVILLE	0740	BUNKER HILL
0512	BIG ROCK	0743	BURBANK
0515	BINGHAM	0745	BUREAU JUNCTION
0525	BISHOP HILL	0750	BURLINGTON
0527	BISMARCK	0755	BURNHAM
0530	BLANDINSVILLE	0757	BURNT PRAIRIE
0535	BLOOMINGDALE	0759	BURR RIDGE
0540	BLOOMINGTON	0762	BUSH
0545	BLUE ISLAND	0765	BUSHNELL
0550	BLUE MOUND	0770	BUTLER
0555	BLUFFS	0775	BYRON
0560	BLUFORD	0780	CABERY
0563	BOLINGBROOK	0785	CAHOKIA
0564	BONDVILLE	0790	CAIRO
0565	BONE GAP	0795	CALHOUN
0570	BONFIELD	0800	CALUMET CITY
0575	BONNIE	0805	CALUMET PARK
0580	BOURBONNAIS	0810	CAMARGO
0585	BOWEN	0815	CAMBRIA
0590	BRACEVILLE	0820	CAMBRIDGE
0595	BRADFORD	0825	CAMDEN
0600	BRADLEY	0830	CAMPBELL HILL
0605	BRAIDWOOD	0835	CAMP POINT
0610	BREESE	0837	CAMPTON HILLS
0615	BRIDGEPORT	0840	CAMPUS
0620	BRIDGEVIEW	0845	CANTON
0625	BRIGHTON	0850	CANTRALL
0630	BRIMFIELD	0855	CAPRON
0635	BROADLANDS	0860	CARBON CLIFF
0640	BROADVIEW	0865	CARBONDALE
0645	BROADWELL	0870	CARBON HILL
0650	BROCTON	0875	CARLINVILLE
0655	BROOKFIELD	0876	CARLOCK
0660	BROOKLYN	0880	CARLYLE
0665	BROOKPORT	0885	CARMI
0670	BROUGHTON	0890	CAROL STREAM
0675	BROWNING	0895	CARPENTERSVILLE
0680	BROWNS	0900	CARRIER MILLS
0685	BROWNSTOWN	0905	CARROLLTON
0690	BRUSSELS	0910	CARTERVILLE
0695	BRYANT	0915	CARTHAGE
0700	BUCKINGHAM	0920	CARY
0705	BUCKLEY	0925	CASEY
0710	BUCKNER	0930	CASEYVILLE
0715	BUDA	0935	CATLIN
0720	BUFFALO	0940	CAVE IN ROCK
0725	BUFFALO GROVE	0945	CEDAR POINT
0729	BULL VALLEY	0950	CEDARVILLE

Hard Copies Uncontrolled

MUNICIPALITY LIST

Code	Municipality	Code	Municipality
0955	CENTRAL CITY	1230	COMPTON
0965	CENTRALIA	1235	CONCORD
0975	CENTREVILLE	1237	CONGERVILLE
0980	CERRO GORDO	1240	COOKSVILLE
0985	CHADWICK	1245	CORDOVA
0990	CHAMPAIGN	1250	CORNELL
0995	CHANDLERVILLE	1255	CORTLAND
0997	CHANNAHON	1265	COULTERVILLE
1005	CHAPIN	1270	COUNTRY CLUB HILLS
1010	CHARLESTON	1272	COUNTRYSIDE
1015	CHATHAM	1275	COWDEN
1020	CHATSWORTH	1280	CRAINVILLE
1025	CHEBANSE	1285	CREAL SPRINGS
1030	CHENOA	1290	CRESCENT CITY
1037	CHERRY	1295	CREST HILL
1040	CHERRY VALLEY	1300	CRESTON
1045	CHESTER	1305	CRESTWOOD
1050	CHESTERFIELD	1310	CRETE
1051	CHICAGO	1315	CREVE COEUR
1055	CHICAGO HEIGHTS	1320	CROSSVILLE
1060	CHICAGO RIDGE	1325	CRYSTAL LAKE
1065	CHILLICOTHE	1335	CUBA
1075	CHRISMAN	1340	CULLOM
1080	CHRISTOPHER	1342	CURRAN
1085	CICERO	1345	CUTLER
1090	CISCO	1350	CYPRESS
1095	CISNE	1355	DAHLGREN
1100	CISSNA PARK	1360	DAKOTA
1110	CLAREMONT	1365	DALLAS CITY
1115	CLARENDON HILLS	1370	DALTON CITY
1120	CLAY CITY	1375	DALZELL
1125	CLAYTON	1377	DAMIANSVILLE
1130	CLEAR LAKE	1380	DANA
1135	CLEVELAND	1385	DANFORTH
1140	CLIFTON	1390	DANVERS
1145	CLINTON	1395	DANVILLE
1150	COAL CITY	1397	DARIEN
1155	COALTON	1400	DAVIS
1160	COAL VALLEY	1402	DAVIS JUNCTION
1165	COATSBURG	1405	DAWSON
1170	COBDEN	1410	DECATUR
1175	COFFEEN	1415	DEER CREEK
1180	COLCHESTER	1420	DEERFIELD
1185	COLETA	1425	DEER GROVE
1190	COLFAX	1430	DEER PARK
1205	COLLINSVILLE	1435	DE KALB
1210	COLONA	1440	DE LAND
1215	COLP	1445	DELAVAN
1220	COLUMBIA	1450	DE PUE
1225	COLUMBUS	1455	DE SOTO

Hard Copies Uncontrolled

MUNICIPALITY LIST

Code	Municipality	Code	Municipality
1460	DES PLAINES	1725	ELIZABETH
1465	DETROIT	1728	ELIZABETHTOWN
1475	DE WITT	1735	ELK GROVE VILLAGE
1480	DIAMOND	1740	ELKHART
1485	DIETERICH	1745	ELKVILLE
1490	DIVERNON	1750	ELLIOTT
1492	DIX /ROME/	1755	ELLIS GROVE
1495	DIXMOOR	1760	ELLISVILLE
1500	DIXON	1765	ELLSWORTH
1505	DOLTON	1770	ELMHURST
1510	DONGOLA	1775	ELMWOOD
1515	DONNELLSON	1780	ELMWOOD PARK
1520	DONOVAN	1785	EL PASO
1525	DORCHESTER	1790	ELSAH
1530	DOVER	1795	ELVASTON
1535	DOWELL	1800	ELWOOD
1540	DOWNERS GROVE	1805	EMDEN
1545	DOWNS	1810	EMMINGTON
1550	DU BOIS	1815	ENERGY
1555	DUNFERMLINE	1820	ENFIELD
1560	DUNLAP	1825	EQUALITY
1565	DUPO	1830	ERIE
1570	DUQUOIN	1835	ESSEX
1575	DURAND	1840	EUREKA
1580	DWIGHT	1845	EVANSTON
1585	EAGARVILLE	1850	EVANSVILLE
1590	EARLVILLE	1855	EVERGREEN PARK
1595	EAST ALTON	1860	EWING
1600	EAST BROOKLYN	1865	EXETER
1603	EAST CAPE GIRARDEAU	1870	FAIRBURY
1605	EAST CARONDELET	1875	FAIRFIELD
1615	EAST DUBUQUE	1885	FAIRMONT CITY
1620	EAST DUNDEE	1890	FAIRMOUNT
1625	EAST GALESBURG	1892	FAIRVIEW
1630	EAST GILLESPIE	1893	FAIRVIEW HEIGHTS
1635	EAST HAZELCREST	1905	FARINA
1640	EAST MOLINE	1910	FARMER CITY
1645	EASTON	1915	FARMERSVILLE
1650	EAST PEORIA	1920	FARMINGTON
1660	EAST ST. LOUIS	1925	FAYETTEVILLE
1670	EDDYVILLE	1930	FERRIS
1675	EDGEWOOD	1935	FIDELITY
1680	EDINBURG	1940	FIELDON
1685	EDWARDSVILLE	1945	FILLMORE
1690	EFFINGHAM	1950	FINDLAY
1700	ELBURN	1955	FISHER
1705	EL DARA	1960	FITHIAN
1710	ELDORADO	1965	FLANAGAN
1715	ELDRED	1970	FLAT ROCK
1720	ELGIN	1975	FLORA

Hard Copies Uncontrolled

MUNICIPALITY LIST

Code	Municipality	Code	Municipality
1980	FLORENCE	2235	GODFREY
1985	FLOSSMOOR	2240	GODLEY
1990	FOOSLAND	2245	GOLCONDA
1993	FORD HEIGHTS	2250	GOLDEN
1995	FOREST CITY	2253	GOLDEN GATE
2005	FOREST PARK	2260	GOLF
2010	FOREST VIEW	2265	GOODFIELD
2015	FORREST	2270	GOOD HOPE
2018	FORRESTON	2275	GOREVILLE
2025	FORSYTH	2280	GORHAM
2030	FOX LAKE	2285	GRAFTON
2035	FOX RIVER GROVE	2290	GRAND RIDGE
2040	FRANKFORT	2295	GRAND TOWER
2045	FRANKLIN	2300	GRANDVIEW
2050	FRANKLIN GROVE	2305	GRANITE CITY
2055	FRANKLIN PARK	2310	GRANTFORK
2060	FREEBURG	2315	GRANT PARK
2065	FREEMANSPUR	2320	GRANVILLE
2070	FREEPORT	2330	GRAYSLAKE
2075	FULTON	2335	GRAYVILLE
2080	FULTS	2340	GREENFIELD
2090	GALATIA	2342	GREEN OAKS
2095	GALENA	2350	GREENUP
2100	GALESBURG	2355	GREEN VALLEY
2105	GALVA	2360	GREENVIEW
2115	GARDNER	2365	GREENVILLE
2120	GARRETT	2368	GREENWOOD
2125	GAYS	2370	GRIDLEY
2130	GENESEO	2375	GRIGGSVILLE
2135	GENEVA	2380	GULFPORT
2140	GENOA	2385	GURNEE
2145	GEORGETOWN	2390	HAINESVILLE
2150	GERMANTOWN	2395	HAMBURG
2152	GERMANTOWN HILLS	2400	HAMEL
2155	GERMAN VALLEY	2405	HAMILTON
2160	GIBSON CITY	2415	HAMMOND
2165	GIFFORD	2420	HAMPSHIRE
2170	GILBERTS	2425	HAMPTON
2175	GILLESPIE	2430	HANAFORD/LOGAN
2180	GILMAN	2435	HANNA CITY
2185	GIRARD	2440	HANOVER
2190	GLADSTONE	2445	HANOVER PARK
2195	GLASFORD	2450	HARDIN
2200	GLASGOW	2455	HARMON
2205	GLEN CARBON	2460	HARRISBURG
2210	GLENCOE	2463	HARRISTOWN
2217	GLENDALE HEIGHTS	2465	HARTFORD
2220	GLEN ELLYN	2470	HARTSBURG
2225	GLENVIEW	2475	HARVARD
2230	GLENWOOD	2480	HARVEL

Hard Copies Uncontrolled

MUNICIPALITY LIST

Code	Municipality	Code	Municipality
2490	HARVEY	2730	HURST
2495	HARWOOD HEIGHTS	2735	HUTSONVILLE
2500	HAVANA	2745	ILLIOPOLIS
2505	HAWTHORN WOODS	2750	INA
2510	HAZEL CREST	2755	INDIAN CREEK
2515	HEBRON	2760	INDIAN HEAD PARK
2520	HECKER	2765	INDIANOLA
2530	HENDERSON	2770	INDUSTRY
2535	HENNEPIN	2774	INVERNESS
2540	HENNING	2775	IOLA
2545	HENRY	2780	IPAVA
2550	HERRICK	2785	IROQUOIS
2555	HERRIN	2792	IRVING
2560	HERSCHER	2795	IRVINGTON
2565	HETTICK	2800	IRWIN
2575	HEYWORTH	2805	ISLAND LAKE
2580	HICKORY HILLS	2810	ITASCA
2585	HIDALGO	2815	IUKA
2590	HIGHLAND	2820	IVESDALE
2595	HIGHLAND PARK	2825	JACKSONVILLE
2600	HIGHWOOD	2828	JEFFERSONVILLE/GEFF
2605	HILLCREST	2835	JEISEYVILLE
2610	HILLSBORO	2840	JEROME
2615	HILLSDALE	2845	JERSEYVILLE
2620	HILLSIDE	2850	JEWETT
2625	HILLVIEW	2852	JOHNSBURG
2630	HINCKLEY	2855	JOHNSONVILLE
2635	HINDSBORO	2860	JOHNSTON CITY
2640	HINSDALE	2865	JOLIET
2645	HODGKINS	2870	JONESBORO
2646	HOFFMAN	2875	JOPPA
2647	HOFFMAN ESTATES	2880	JOY
2653	HOLIDAY HILLS	2888	JUNCTION
2655	HOLLOWAYVILLE	2890	JUNCTION CITY
2660	HOMER	2895	JUSTICE
2663	HOMER GLENN	2900	KAMPSVILLE
2665	HOMETOWN	2905	KANE
2670	HOMEWOOD	2907	KANEVILLE
2675	HOOPESTON	2910	KANGLEY
2680	HOOPPOLE	2915	KANKAKEE
2685	HOPEDALE	2920	KANSAS
2687	HOPEWELL	2925	KAPPA
2688	HOPKINS PARK	2930	KARNAK
2690	HOYLETON	2935	KASKASKIA
2695	HUDSON	2940	KEENES
2700	HUEY	2950	KEENSBURG
2705	HULL	2955	KEITHSBURG
2710	HUMBOLDT	2960	KELL
2715	HUME	2965	KEMPTON
2725	HUNTLEY	2970	KENILWORTH

Hard Copies Uncontrolled

MUNICIPALITY LIST

Code	Municipality	Code	Municipality
2975	KENNEY	3223	LIBERTY
2980	KEWANEE	3230	LIBERTYVILLE
2985	KEYESPORT	3233	LILY LAKE
2990	KILBOURNE	3235	LIMA
2995	KILDEER	3237	LIMESTONE
3000	KINCAID	3240	LINCOLN
3005	KINDERHOOK	3245	LINCOLNSHIRE
3012	KINGSTON	3250	LINCOLNWOOD
3015	KINGSTON MINES	3255	LINDENHURST
3020	KINMUNDY	3260	LISBON
3025	KINSMAN	3265	LISLE
3030	KIRKLAND	3270	LITCHFIELD
3035	KIRKWOOD	3275	LITTLETON
3045	KNOXVILLE	3280	LITTLE YORK
3050	LACON	3285	LIVERPOOL
3055	LADD	3290	LIVINGSTON
3060	LA FAYETTE	3295	LOAMI
3062	LA GRANGE	3300	LOCKPORT
3064	LA GRANGE PARK	3305	LODA
3075	LA HARPE	3310	LOMAX
3080	LAKE BARRINGTON	3315	LOMBARD
3085	LAKE BLUFF	3320	LONDON MILLS
3090	LAKE FOREST	3323	LONG CREEK
3095	LAKE IN THE HILLS	3325	LONG GROVE
3097	LAKE KA-HO	3335	LONG POINT
3100	LAKEMOOR	3340	LONG VIEW
3105	LAKE VILLA	3345	LORAINE
3110	LAKEWOOD	3350	LOSTANT
3115	LAKE ZURICH	3355	LOUISVILLE
3120	LAMOILLE	3360	LOVES PARK
3125	LANARK	3365	LOVINGTON
3130	LANSING	3370	LUDLOW
3135	LA PRAIRIE	3375	LYNDON
3140	LA ROSE	3380	LYNNVILLE
3145	LASALLE	3385	LYNWOOD
3150	LATHAM	3390	LYONS
3155	LAWRENCEVILLE	3393	MCCLURE
3160	LEAF RIVER	3395	MC COOK
3165	LEBANON	3400	MC CULLOM LAKE
3170	LEE	3403	MACEDONIA
3177	LELAND	3405	MC HENRY
3180	LELAND GROVE	3406	MACHESNEY PARK
3185	LEMONT	3408	MACKINAW
3190	LENA	3410	MC LEAN
3195	LENZBURG	3415	MC LEANSBORO
3200	LEONORE	3420	MC NABB
3205	LERNA	3435	MACOMB
3210	LEROY	3440	MACON
3215	LEWISTOWN	3445	MADISON
3220	LEXINGTON	3450	MAEYSTOWN

Hard Copies Uncontrolled

MUNICIPALITY LIST

Code	Municipality	Code	Municipality
3455	MAGNOLIA	3710	METTAWA
3460	MAHOMET	3720	MIDDLETOWN
3465	MAKANDA	3725	MIDLOTHIAN
3470	MALDEN	3730	MILAN
3475	MALTA	3735	MILFORD
3480	MANCHESTER	3737	MILLBROOK
3485	MANHATTAN	3740	MILL CREEK
3490	MANITO	3745	MILLEDGEVILLE
3495	MANLIUS	3750	MILLINGTON
3500	MANSFIELD	3755	MILL SHOALS
3505	MANTENO	3760	MILLSTADT
3510	MAPLE PARK	3770	MILTON
3515	MAPLETON	3775	MINERAL
3520	MAQUON	3780	MINIER
3525	MARENGO	3785	MINONK
3530	MARIETTA	3790	MINOOKA
3535	MARINE	3795	MODESTO
3540	MARION	3800	MOKENA
3550	MARISSA	3805	MOLINE
3558	MARK	3810	MOMENCE
3560	MARKHAM	3815	MONEE
3565	MAROA	3820	MONMOUTH
3570	MARQUETTE HEIGHTS	3825	MONROE CENTER
3575	MARSEILLES	3830	MONTGOMERY
3580	MARSHALL	3835	MONTICELLO
3585	MARTINSVILLE	3840	MONTROSE
3590	MARTINTON	3845	MORRIS
3595	MARYVILLE	3850	MORRISON
3600	MASCOUTAH	3855	MORRISONVILLE
3603	MASON	3872	MORTON
3605	MASON CITY	3873	MORTON GROVE
3615	MATHERSVILLE	3875	MOUND CITY
3620	MATTESON	3880	MOUNDS
3625	MATTOON	3890	MD STATION/TIMEWELL
3630	MAUNIE	3895	MT AUBURN
3635	MAYWOOD	3900	MOUNT CARMEL
3640	MAZON	3905	MT CARROLL
3645	MECHANICSBURG	3910	MOUNT CLARE
3650	MEDIA	3915	MT ERIE
3655	MEDORA	3920	MT MORRIS
3660	MELROSE PARK	3925	MOUNT OLIVE
3665	MELVIN	3930	MOUNT PROSPECT
3670	MENDON	3935	MT PULASKI
3675	MENDOTA	3940	MT STERLING
3680	MENOMINEE	3945	MOUNT VERNON
3685	MEREDOSIA	3947	MT ZION
3690	MERRIONETTE PARK	3950	MOWEAQUA
3695	METAMORA	3960	MUDDY
3700	METCALF	3965	MULBERRY GROVE
3705	METROPOLIS	3970	MUNCIE

Hard Copies Uncontrolled

MUNICIPALITY LIST

Code	Municipality	Code	Municipality
3975	MUNDELEIN	4230	NORTH PEKIN
3980	MURPHYSBORO	4240	NORTH RIVERSIDE
3985	MURRAYVILLE	4245	NORTH UTICA/UTICA/
3990	NAPERVILLE	4250	NORWOOD
3995	NAPLATE	4262	OAK BROOK
4000	NAPLES	4263	OAKBROOK TERRACE
4005	NASHVILLE	4264	OAKDALE
4010	NASON	4265	OAKFORD
4020	NAUVOO	4270	OAK FOREST
4025	NEBO	4275	OAK GROVE
4030	NELSON	4285	OAKLAND
4035	NEOGA	4290	OAK LAWN
4040	NEPONSET	4295	OAK PARK
4045	NEWARK	4300	OAKWOOD
4050	NEW ATHENS	4305	OAKWOOD HILLS
4055	NEW BADEN	4310	OBLONG
4060	NEW BEDFORD	4315	OCONEE
4065	NEW BERLIN	4320	ODELL
4070	NEW BOSTON	4325	ODIN
4075	NEW BURNSIDE	4330	O'FALLON
4080	NEW CANTON	4335	OGDEN
4085	NEW DOUGLAS	4340	OGLESBY
4090	NEW GRAND CHAIN	4345	OHIO
4095	NEW HAVEN	4350	OHLMAN
4100	NEW HOLLAND	4355	OKAWVILLE
4105	NEW LENOX	4365	OLD MILL CREEK
4110	NEWMAN	4370	OLD RIPLEY
4112	NEW MILLFORD	4375	OLD SHAWNEETOWN
4115	NEW MINDEN	4380	OLMSTED
4120	NEW SALEM	4385	OLNEY
4125	NEWTON	4390	OLYMPIA FIELDS
4130	NIANTIC	4395	OMAHA
4135	NILES	4400	ONARGA
4140	NILWOOD	4405	ONEIDA
4145	NOBLE	4410	OQUAWKA
4150	NOKOMIS	4415	ORANGEVILLE
4155	NORA	4420	OREANA
4160	NORMAL	4425	OREGON
4165	NORRIDGE	4430	ORIENT
4170	NORRIS	4435	ORION
4172	NORRIS CITY	4437	ORLAND HILLS
4180	NORTH AURORA	4440	ORLAND PARK
4185	NORTH BARRINGTON	4445	OSWEGO
4190	NORTHBROOK	4450	OTTAWA
4193	NORTH CALEDONIA	4455	OTTERVILLE
4195	NORTH CHICAGO	4460	OWANECO
4205	NORTH CITY	4465	PALATINE
4210	NORTHFIELD	4470	PALESTINE
4215	NORTH HENDERSON	4475	PALMER
4220	NORTHLAKE	4480	PALMYRA

Hard Copies Uncontrolled

MUNICIPALITY LIST

Code	Municipality	Code	Municipality
4485	PALOS HEIGHTS	4730	POPLAR GROVE
4490	PALOS HILLS	4733	PORT BARRINGTON
4495	PALOS PARK	4735	PORT BYRON
4500	PANA	4740	POSEN
4505	PANAMA	4745	POTOMAC
4510	PANOLA	4750	PRAIRIE CITY
4515	PAPINEAU	4755	PRAIRIE DU ROCHER
4520	PARIS	4757	PRAIRIE GROVE
4525	PARK CITY	4760	PRINCETON
4530	PARKERSBURG	4765	PRINCEVILLE
4535	PARK FOREST	4770	PROPHETSTOWN
4540	PARK RIDGE	4772	PROSPECT HEIGHTS
4545	PATOKA	4775	PULASKI
4550	PAWNEE	4780	QUINCY
4555	PAW PAW	4785	RADOM
4560	PAXTON	4790	RALEIGH
4565	PAYSON	4795	RAMSEY
4573	PEARL	4800	RANKIN
4575	PEARL CITY	4805	RANSOM
4580	PECATONICA	4810	RANTOUL
4585	PEKIN	4815	RAPIDS CITY
4590	PEORIA	4820	RARITAN
4595	PEORIA HEIGHTS	4825	RAYMOND
4600	PEOTONE	4830	RED BUD
4605	PERCY	4835	REDDICK
4610	PERRY	4840	REDMON
4615	PERU	4845	REYNOLDS
4620	PESOTUM	4850	RICHMOND
4625	PETERSBURG	4855	RICHTON PARK
4630	PHILLIPSTOWN	4860	RICHVIEW
4635	PHILO	4865	RIDGE FARM
4640	PHOENIX	4870	RIDGWAY
4645	PIERRON	4875	RIDOTT
4650	PINCKNEYVILLE	4878	RINGWOOD
4655	PINGREE GROVE	4880	RIO
4660	PIPER CITY	4885	RIPLEY
4665	PITTSBURG	4890	RIVERDALE
4670	PITTSFIELD	4895	RIVER FOREST
4675	PLAINFIELD	4900	RIVER GROVE
4685	PLAINVILLE	4905	RIVERSIDE
4690	PLANO	4910	RIVERTON
4693	PLATTVILLE	4911	RIVERWOODS
4695	PLEASANT HILL	4915	ROANOKE
4700	PLEASANT PLAINS	4920	ROBBINS
4705	PLYMOUTH	4925	ROBERTS
4710	POCAHONTAS	4930	ROBINSON
4715	POLO	4935	ROCHELLE
4720	PONTIAC	4940	ROCHESTER
4724	PONTOON BEACH	4945	ROCKBRIDGE
4725	PONTOOSUC	4950	ROCK CITY

Hard Copies Uncontrolled

MUNICIPALITY LIST

Code	Municipality	Code	Municipality
4955	ROCKDALE	5190	SAVANNA
4960	ROCK FALLS	5195	SAVOY
4965	ROCKFORD	5200	SAWYERVILLE
4970	ROCK ISLAND	5205	SAYBROOK
4975	ROCKTON	5210	SCALES MOUND
4980	ROCKWOOD	5215	SCHAUMBURG
4985	ROLLING MEADOWS	5220	SCHILLER PARK
4995	ROMEOVILLE	5225	SCHRAM CITY
5000	ROODHOUSE	5230	SCIOTA
5003	ROSCOE	5235	SCOTTVILLE
5005	ROSE HILL	5240	SEATON
5010	ROSELLE	5245	SEATONVILLE
5015	ROSEMONT	5250	SECOR
5020	ROSEVILLE	5255	SENECA
5030	ROSICLARE	5260	SESSER
5035	ROSSVILLE	5265	SHABBONA
5043	ROUND LAKE	5275	SHANNON
5045	ROUND LAKE BEACH	5280	SHAWNEETOWN
5047	ROUND LAKE HEIGHTS	5285	SHEFFIELD
5050	ROUND LAKE PARK	5290	SHELBYVILLE
5055	ROXANA	5295	SHELDON
5060	ROYAL	5300	SHERIDAN
5062	ROYAL LAKES	5301	SHERMAN
5065	ROYALTON	5305	SHERRARD
5070	RUMA	5310	SHILOH
5075	RUSHVILLE	5315	SHIPMAN
5080	RUSSELLVILLE	5320	SHOREWOOD
5085	RUTLAND	5325	SHUMWAY
5090	SADORUS	5330	SIBLEY
5095	SAILOR SPRINGS	5335	SIDELL
5100	ST ANNE	5340	SIDNEY
5105	ST AUGUSTINE	5345	SIGEL
5110	ST CHARLES	5350	SILVIS
5115	ST DAVID	5355	SIMPSON
5120	ST ELMO	5360	SIMS
5122	STE MARIE	5365	SKOKIE
5125	ST FRANCISVILLE	5370	SLEEPY HOLLOW
5130	ST JACOB	5375	SMITHBORO
5135	ST JOHNS	5380	SMITHFIELD
5140	ST JOSEPH	5385	SMITHTON
5145	ST LIBORY	5390	SOMONAUK
5155	ST PETER	5395	SORENTO
5160	SALEM	5397	SOUTH BARRINGTON
5163	SAMMONS POINT	5400	SOUTH BELOIT
5165	SANDOVAL	5405	SOUTH CHICAGO HTS
5170	SANDWICH	5410	SOUTH ELGIN
5175	SAN JOSE	5415	SOUTHERN VIEW
5177	SAUGET	5420	SOUTH HOLLAND
5180	SAUK VILLAGE	5425	SOUTH JACKSONVILLE
5185	SAUNEMIN	5430	SOUTH PEKIN

Hard Copies Uncontrolled

MUNICIPALITY LIST

Code	Municipality	Code	Municipality
5435	SOUTH ROXANA	5690	TEUTOPOLIS
5445	SOUTH WILMINGTON	5695	THAWVILLE
5450	SPARLAND	5700	THAYER
5455	SPARTA	5705	THEBES
5460	SPAULDING	5707	THIRD LAKE
5465	SPILLERTOWN	5710	THOMASBORO
5470	SPRING BAY	5715	THOMPSONVILLE
5475	SPRINGERTON	5720	THOMSON
5480	SPRINGFIELD	5725	THORNTON
5485	SPRING GROVE	5730	TILDEN
5490	SPRING VALLEY	5735	TILTON
5497	STANDARD	5737	TIMBERLANE
5500	STANDARD CITY	5740	TIME
5505	STANFORD	5745	TINLEY PARK
5510	STAUNTON	5750	TISKILWA
5515	STEELEVILLE	5755	TOLEDO
5520	STEGER	5760	TOLONO
5525	STERLING	5765	TOLUCA
5530	STEWARD	5770	TONICA
5535	STEWARDSON	5775	TOPEKA
5540	STICKNEY	5785	TOULON
5545	STILLMAN VALLEY	5788	TOVEY/HUMPHREY
5550	STOCKTON	5790	TOWANDA
5555	STONEFORT	5795	TOWER HILL
5560	STONE PARK	5797	TOWER LAKES
5565	STONINGTON	5800	TREMONT
5570	STOY	5805	TRENTON
5575	STRASBURG	5808	TROUT VALLEY
5580	STRAWN	5810	TROY
5585	STREAMWOOD	5815	TROY GROVE
5590	STREATOR	5820	TUSCOLA
5595	STRONGHURST	5825	ULLIN
5600	SUBLETTE	5830	UNION
5605	SUGAR GROVE	5835	UNION HILL
5610	SULLIVAN	5838	UNIVERSITY PARK
5615	SUMMERFIELD	5845	URBANA
5620	SUMMIT	5847	URSA
5625	SUMNER	5850	VALIER
5633	SUN RIVER TERRACE	5855	VALLEY CITY
5635	SWANSEA	5865	VALMEYER
5640	SYCAMORE	5870	VANDALIA
5645	SYMERTON	5875	VARNA
5650	TABLE GROVE	5880	VENEDY
5655	TALLULA	5890	VENICE
5660	TAMAROA	5895	VERGENNES
5665	TAMMS	5905	VERMILION
5670	TAMPICO	5910	VERMONT
5675	TAYLOR SPRINGS	5915	VERNON
5680	TAYLORVILLE	5920	VERNON HILLS
5685	TENNESSEE	5925	VERONA

Hard Copies Uncontrolled

MUNICIPALITY LIST

Code	Municipality
5930	VERSAILLES
5935	VICTORIA
5940	VIENNA
5945	VILLA GROVE
5950	VILLA PARK
5955	VIOLA
5960	VIRDEN
5963	VIRGIL
5965	VIRGINIA
5966	VOLO
5968	WADSWORTH
5970	WAGGONER
5977	WALNUT
5980	WALNUT HILL
5985	WALSHVILLE
5990	WALTONVILLE
5995	WAMAC
6000	WAPELLA
6010	WARREN
6015	WARRENSBURG
6020	WARRENVILLE
6025	WARSAW
6030	WASHBURN
6035	WASHINGTON
6040	WASHINGTON PARK
6045	WATAGA
6050	WATERLOO
6055	WATERMAN
6060	WATSEKA
6065	WATSON
6070	WAUCONDA
6075	WAUKEGAN
6080	WAVERLY
6087	WAYNE
6090	WAYNE CITY
6095	WAYNESVILLE
6100	WELDON
6105	WELLINGTON
6110	WENONA
6115	WENONAH
6120	WEST BROOKLYN
6125	WESTCHESTER
6130	WEST CHICAGO
6135	WEST CITY
6140	WEST DUNDEE
6145	WESTERN SPRINGS
6150	WESTFIELD
6155	WEST FRANKFORT
6165	WESTMONT
6168	WEST PEORIA
6170	WEST POINT
6175	WEST SALEM
6185	WESTVILLE
6190	WHEATON
6195	WHEELER
6200	WHEELING
6205	WHITEASH
6210	WHITE CITY
6215	WHITE HALL
6220	WILLIAMSFIELD
6225	WILLIAMSON
6230	WILLIAMSVILLE
6235	WILLISVILLE
6240	WILLOWBROOK
6245	WILLOW HILL
6250	WILLOW SPRINGS
6255	WILMETTE
6260	WILMINGTON
6265	PATTERSON/WILMINGTON
6270	WILSONVILLE
6275	WINCHESTER
6280	WINDSOR
6285	NEW WINDSOR/WINDSOR
6295	WINFIELD
6300	WINNEBAGO
6305	WINNETKA
6310	WINSLOW
6315	WINTHROP HARBOR
6320	WITT
6326	WONDER LAKE
6330	WOOD DALE
6335	WOODHULL
6340	WOODLAND
6345	WOODLAWN
6350	WOODRIDGE
6355	WOOD RIVER
6360	WOODSON
6365	WOODSTOCK
6370	WORDEN
6375	WORTH
6380	WYANET
6385	WYOMING
6390	XENIA
6395	YALE
6400	YATES CITY
6405	YORKVILLE
6410	ZEIGLER
6415	ZION

Hard Copies Uncontrolled

APPENDIX B

TOWNSHIP/ROAD DISTRICT LIST

APPENDIX B

TOWNSHIP/ROAD DISTRICT LIST

County	Code	Township Or Road District
Adams	01	Beverly
	02	Burton
	03	Camp Point
	04	Clayton
	05	Columbus
	06	Concord
	07	Ellington
	08	Fall Creek
	09	Gilmer
	10	Honey Creek
	11	Houston
	12	Keene
	13	Liberty
	14	Lima
	15	Mckee
	16	Melrose
	17	Mendon
	18	Northeast
	19	Payson
	20	Quincy (Quincy)
	21	Richfield
	22	Riverside
	23	Ursa
	AL	Bailey Pk Dist
	AZ	Beverly Pk Dist
	HK	Liberty Twp Pk Dist
	KW	Quincy Pk Dist
Alexander	01	Co Unit Road Dist
Bond	01	Burgess
	02	Central
	03	Lagrange
	04	Mills
	05	Mulberry Grove
	06	Old Ripley
	07	Pleasant Mound
	08	Shoal Creek
	09	Tamalco
	GS	Kingsbury Pk Dist
Boone	01	Belvidere
	02	Bonus
	03	Boone
	04	Caledonia
	05	Flora
	06	Leroy

Hard Copies Uncontrolled

APPENDIX B

TOWNSHIP/ROAD DISTRICT LIST

County	Code	Township Or Road District
Boone (cont)	07	Manchester
	08	Poplar Grove
	09	Spring
	ZZ	Adjacent State Township
	AT	Belvidere Pk Dist
	BG	Boone Co Cons Dist
Brown	01	Buckhorn
	02	Cooperstown
	03	Elkhorn
	04	Lee
	05	Missouri
	06	Mount Sterling
	07	Pea Ridge
	08	Ripley
	09	Versailles
Bureau	01	Arispie
	02	Berlin
	03	Bureau
	04	Clarion
	05	Concord
	06	Dover
	07	Fairfield
	08	Gold
	09	Greenville
	10	Hall
	11	Indiantown
	12	Lamoille
	13	Leepertown
	14	Macon
	15	Manlius
	16	Milo
	17	Mineral
	18	Neponset
	19	Ohio
	20	Princeton
	21	Selby
	22	Walnut
	23	Westfield
	24	Wheatland
	25	Wyanet
	KR	Princeton Pk Dist
	ND	Walnut Pk Dist
Calhoun	01	Co Unit Road Dist
	KJ	Pleasant Hill Pk Dist

Hard Copies Uncontrolled

APPENDIX B

TOWNSHIP/ROAD DISTRICT LIST

County	Code	Township Or Road District
Carroll	01	Cherry Grove - Shannon
	02	Elkhorn Grove
	03	Fairhaven
	04	Freedom
	06	Mount Carroll
	07	Rock Creek - Lima
	08	Salem
	09	Savanna
	11	Washington
	12	Woodland
	13	Wysox
	14	York
	IM	Milledgeville Pk Dist
	LS	Savanna Twp Pk Dist
Cass	01	Arenzville
	02	Ashland
	03	Beardstown
	04	Bluff Springs
	05	Chandlerville
	06	Hagener
	07	Newmansville
	08	Panther Creek
	09	Philadelphia
	10	Sangamon Valley
	11	Virginia
	AR	Beardstown Pk Dist
Champaign	01	Ayers
	02	Brown
	03	Champaign
	54	Champaign City (Champaign)
	05	Colfax
	06	Compromise
	07	Condit
	08	Crittenden
	59	Cunningham (Urbana City)
	10	East Bend
	11	Harwood
	12	Hensley
	13	Kerr
	14	Ludlow
	15	Mahomet
	16	Newcomb
	17	Ogden
	18	Pesotum

Hard Copies Uncontrolled

APPENDIX B

TOWNSHIP/ROAD DISTRICT LIST

County	Code	Township Or Road District
Champaign (cont)	19	Philo
	20	Rantoul
	21	Raymond
	22	Sadorus
	24	Scott
	25	Sidney
	26	Somer
	27	South Homer
	23	St Joseph
	28	Stanton
	29	Tolono
	30	Urbana
	CF	Chmpgn Co For Pres Dist
	CG	Chmpgn Pk Dist
	KX	Rantoul Pk Dist
	MS	Tolono Pk Dist
	MW	Urbana Pk Dist
Christian	01	Assumption
	02	Bear Creek
	03	Buckhart
	04	Greenwood
	05	Johnson
	06	King
	07	Locust
	08	May
	09	Mosquito
	10	Mt Auburn
	11	Pana
	12	Prairieton
	13	Ricks
	14	Rosamond
	15	South Fork
	16	Stonington
	17	Taylorville
	KQ	Prairieton General Pk Dist
	MN	Tylrvl Com Pleasure Dr & Pk Dst
Clark	01	Anderson
	02	Auburn
	03	Casey
	04	Darwin
	05	Dolson
	06	Douglas
	07	Johnson
	08	Marshall
	09	Martinsville

Hard Copies Uncontrolled

APPENDIX B

TOWNSHIP/ROAD DISTRICT LIST

County	Code	Township Or Road District
Clark (cont)	10	Melrose
	11	Orange
	12	Parker
	13	Wabash
	14	Westfield
	15	York
	ZZ	Adjacent State Township
	CB	Casey Twp Pk Dist
	CS	Clark Co Pk Dist
Clay	01	Bible Grove
	02	Blair
	03	Clay City
	04	Harter
	05	Hoosier
	06	Larkinsburg
	07	Louisville
	08	Oskaloosa
	09	Pixley
	10	Songer
	11	Stanford
	12	Xenia
Clinton	01	Breese
	02	Brookside
	03	Carlyle
	04	Clement
	05	East Fork
	06	Germantown
	07	Irishtown
	08	Lake
	09	Looking Glass
	10	Meridian
	12	Santa Fe
	11	St Rose
	13	Sugar Creek
	14	Wade
	15	Wheatfield
	FC	Germantown Pk Dist
Coles	01	Ashmore
	02	Charleston
	03	East Oakland
	04	Humboldt
	05	Hutton
	06	Lafayette
	07	Mattoon

Hard Copies Uncontrolled

APPENDIX B

TOWNSHIP/ROAD DISTRICT LIST

County	Code	Township Or Road District
Coles (cont)	08	Morgan
	09	North Okaw
	10	Paradise
	11	Pleasant Grove
	12	Seven Hickory
	AI	Arthur Comm Pk Dist
	CI	Charleston Pk Dist
	CJ	Charleston Playground & Rec Dpt
	DU	East Oakland Pk Dist
	ID	Mattoon Twp Pk Dist
Cook	01	Barrington
	52	Berwyn (Berwyn)
	03	Bloom
	04	Bremen
	05	Calumet
	56	Cicero (Cicero)
	07	Elk Grove
	58	Evanston (Evanston)
	09	Hanover
	60	Hyde Pk (Chicago)
	61	Jefferson (Chicago)
	62	Lake (Chicago)
	63	Lake View (Chicago)
	14	Lemont
	15	Leyden
	16	Lyons
	17	Maine
	99	New Trier (New Trier)
	98	Niles (Niles)
	70	North Chicago (Chicago)
	21	Northfield
	22	Norwood Pk
	73	Oak Pk (Oak Pk)
	24	Orland
	25	Palatine
	26	Palos
	27	Proviso
	28	Rich
	79	River Forest (River Forest)
	97	Riverside
	81	Rogers Pk (Chicago)
	32	Schaumburg
	83	South Chicago (Chicago)
	34	Stickney
	35	Thornton
	86	West Chicago (Chicago)

Hard Copies Uncontrolled

APPENDIX B

TOWNSHIP/ROAD DISTRICT LIST

County	Code	Township Or Road District
Cook (cont)	37	Wheeling
	38	Worth
	ZZ	Adjacent State Township
	AE	Alsip Pk Dist
	AG	Arlington Heights Pk Dist
	AM	Barrington Countryside Pk Dist
	AN	Barrington Pk Dist
	AP	Bartlett Pk Dist
	AS	Bedford Pk Dist
	AU	Bensenville Pk Dist
	AW	Berkeley Pk Dist
	AX	Berwyn Pk Dist
	AY	Berwyn Playground & Rec Comm
	BE	Blue Island Pk Dist
	BI	Bridgeview Pk Dist
	BJ	Broadview Pk Dist
	BK	Buffalo Grove Pk Dist
	BM	Burr Ridge Pk Dist
	BR	Calumet Memorial Pk Dist
	CC	Central Area Pk Dist
	CD	Central Stickney Pk Dist
	CL	Chicago Heights Pk Dist
	CM	Chicago Pk Dist
	CN	Chicago Ridge Pk Dist
	CT	Clyde Pk Dist
	CX	Cntry Club Hills Pk Dist
	CV	Comm Pk Dist
	CW	Cook Co For Pres Dist
	DI	Deerfield Pk Dist
	DL	Desplaines Pk Dist
	DP	Dolton Pk Dist
	DZ	Elk Grove Pk Dist
	EA	Elmhurst Pk Dist
	EN	Forest View Pk Dist
	ET	Frankfort Sq Pk Dist
	EU	Franklin Pk Pk Dist
	FE	Glencoe Pk-Rec Dist
	FF	Glenview Pk Dist
	FG	Golf Maine Pk Dist
	FT	Hanover Pk Pk Dist
	FV	Harvey Pk Dist
	FW	Hawthorne Pk Dist
	FX	Hazel Crest Pk Dist
	GA	Hickory Hills Pk Dist
	GB	Hoffman Estates Pk Dist
	GD	Homewd-Flossmoor Pk Dist
	GI	Inverness Pk Dist

Hard Copies Uncontrolled

APPENDIX B

TOWNSHIP/ROAD DISTRICT LIST

County	Code	Township Or Road District
Cook (cont)	GL	Ivanhoe Pk Dist
	GQ	Kenilworth Pk Dist
	HC	Lan-Oak Pk Dist
	HG	Lemont Twp Pk Dist
	HL	Lighthouse Pk Dist
	HP	Lincolnwd Pks & Rec Dept
	IA	Markham Pk Dist
	IE	McCook-Hodgkins Pk Dist
	IH	Memorial Pk Dist
	IK	Midlothian Pk Dist
	IN	Mokena Comm Pk Dist
	IR	Morton Grove Pk Dist
	IT	Mount Prospect Pk Dist
	JC	Niles Pk Dist
	JE	Norridge Pk Dist
	JF	North Berwyn Pk Dist
	JG	Northbrook Pk Dist
	JH	Northfield Pk Dist
	JJ	Oak Forest Pk Dist
	JK	Oak Lawn Pk Dist
	JN	Olympia Field Pk Dist
	JQ	Orland Pk Rec & Pk Dept
	JS	Palatine Pk Dist
	KD	Phoenix Pk Dist
	JT	Pk Dist Of Forest Pk
	JV	Pk Dist Of Lagrange
	JW	Pk Dist Of Oak Pk
	JX	Pk Forest Rec & Pks Dept
	JY	Pk Ridge Rec & Pk Dist
	KI	Pleasant Dale Pk Dist
	KM	Plum Grove Cntryside Pk Dist
	KP	Posen Pk Dist
	KT	Prospect Heights Pk Dist
	KZ	Ridgeville Pk Dist
	LA	River Forest Pk Dist
	LB	River Trails Pk Dist
	LC	Riverdale Pk Dist
	LE	Robbins Pk Dist
	LH	Rolling Meadows Pk Dist
	LK	Rosemont Pk Dist
	LQ	Salt Creek Rural Pk Dist
	LT	Schaumburg Pk Dist
	LV	Skokie Pk Dist
	LW	So Barrington Pk Dist
	LX	So Holland Pks & Rec Dept
	LZ	So Stickney Pk Dist
	MI	Streamwood Pk Dist

Hard Copies Uncontrolled

APPENDIX B

TOWNSHIP/ROAD DISTRICT LIST

County	Code	Township Or Road District
Cook (cont)	MJ	Summit Pk Dist
	MQ	Tinley Pk Dist
	NC	Veterans Pk Dist
	NK	West Maywood Pk Dist
	NL	Westchester Pk Dist
	NM	Westdale Pk Dist
	NN	Western Springs Pk Dist
	NR	Wheeling Pk Dist
	NU	Wilmette Pk Dist
	NX	Winnetka Pk Dist
	PB	Worth-Palos Pk Dist
Crawford	01	Honey Creek
	02	Hutsonville
	03	Lamotte
	04	Licking
	05	Martin
	06	Montgomery
	07	Oblong
	08	Prairie
	09	Robinson
	10	Southwest
	GG	Hutsonville Pk Dist
	HB	Lamotte Twp Pk Dist
Cumberland	01	Cottonwood
	02	Crooked Creek
	03	Greenup
	04	Neoga
	05	Spring Point
	06	Sumpter
	07	Union
	08	Woodbury
	ML	Sumpter Twp Pk Dist
Dekalb	01	Afton
	02	Clinton
	03	Cortland
	04	Dekalb
	05	Franklin
	06	Genoa
	07	Kingston
	08	Malta
	09	Mayfield
	10	Milan
	11	Paw Paw
	12	Pierce

Hard Copies Uncontrolled

APPENDIX B

TOWNSHIP/ROAD DISTRICT LIST

County	Code	Township Or Road District
Dekalb (cont)	13	Sandwich
	14	Shabbona
	15	Somonauk
	16	South Grove
	17	Squaw Grove
	18	Sycamore
	19	Victor
	DF	Dekalb Co For Pres Dist
	DG	Dekalb Pk Dist
	EV	Franklin Twp Pk Dist
	FB	Genoa Twp Pk Dist
	GT	Kingston Twp Pk Dist
	LR	Sandwich Pk Dist
	MM	Sycamore Pk Dist
Dewitt	01	Barnett
	02	Clintonia
	03	Creek
	04	Dewitt
	05	Harp
	06	Nixon
	07	Rutledge
	08	Santa Anna
	09	Texas
	10	Tunbridge
	11	Wapella
	12	Waynesville
	13	Wilson
Douglas	01	Arcola
	02	Bourbon
	03	Bowdre
	04	Camargo
	05	Garrett
	06	Murdock
	07	Newman
	08	Sargent
	09	Tuscola
	AI	Arthur Comm Pk Dist
Dupage	01	Addison
	02	Bloomingdale
	03	Downers Grove
	04	Lisle
	05	Milton
	06	Naperville
	07	Wayne

Hard Copies Uncontrolled

APPENDIX B

TOWNSHIP/ROAD DISTRICT LIST

County	Code	Township Or Road District
Dupage (cont)	08	Winfield
	09	York
	AA	Addison Pk Dist
	AP	Bartlett Pk Dist
	AU	Bensenville Pk Dist
	BD	Bloomingdale Pk Dist
	BM	Burr Ridge Pk Dist
	BN	Butterfield Pk Dist
	BW	Carol Stream Pk Dist
	CM	Chicago Pk Dist
	CR	Clarendon Hills Pk Dist
	DE	Darien Pk Dist
	DR	Downers Grove Pk Dist
	EA	Elmhurst Pk Dist
	EK	For Pres Dist Of Dupage Co
	EQ	Fox Valley Pk Dist
	FD	Glen Ellyn Pk Dist
	FH	Golfview Hills Pk Dist
	FT	Hanover Pk Pk Dist
	GK	Itasca Pk Dist
	HQ	Lisle Pk Dist
	HT	Lombard Pk Dist
	IG	Medinah Pk Dist
	IY	Naperville Pk Dist
	JI	Oak Brook Pk Dist
	JL	Oakbrook Ter Pk Dist
	KF	Pick Sub-Div Pk Dist
	LJ	Roselle Pk Dist
	LM	Round Grove Pk Dist
	MB	St Charles Pk Dist
	MU	Tri-State Pk Dist
	NJ	West Chicago Pk Dist
	NP	Westmont Pk Dist
	NQ	Wheaton Pk Dist
	NV	Winfield Pk Dist
	NZ	Wood Dale Pk Dist
	PA	Woodridge Pk Dist
	PC	York Center Pk Dist
	EG	53 Trails Pk Dist
Edgar	01	Brouilletts Creek
	02	Buck
	03	Edgar
	04	Elbridge
	05	Embarrass
	06	Grandview
	07	Hunter

Hard Copies Uncontrolled

APPENDIX B

TOWNSHIP/ROAD DISTRICT LIST

County	Code	Township Or Road District
Edgar (cont)	08	Kansas
	09	Paris
	10	Prairie
	11	Ross
	12	Shiloh
	13	Stratton
	14	Symmes
	15	Young America
	ZZ	Adjacent State Township
Edwards	01	Road Dist #01
	02	Road Dist #02
	03	Road Dist #03
	04	Road Dist #04
	05	Road Dist #05
	06	Road Dist #06
	07	Road Dist #07
	08	Road Dist #08
	14	Road Dist #14
	15	Road Dist #15
	59	Road Dist #59 (Albion)
	63	Road Dist #63 (West Salem)
	AB	Albion Pk Dist
Effingham	01	Banner
	02	Bishop
	03	Douglas
	04	Jackson
	05	Liberty
	06	Lucas
	07	Mason
	08	Moccasin
	09	Mound
	10	St Francis
	11	Summit
	12	Teutopolis
	13	Union
	14	Watson
	15	West
	DX	Effingham Pk Dist
Fayette	01	Avena
	02	Bear Grove
	03	Bowling Green
	04	Carson
	06	Kaskaskia
	07	Laclede

Hard Copies Uncontrolled

APPENDIX B

TOWNSHIP/ROAD DISTRICT LIST

County	Code	Township Or Road District
Fayette (cont)	08	Lone Grove
	09	Loudon
	05	North Hurricane
	10	Otego
	11	Pope
	12	Ramsey
	13	Sefton
	14	Seminary
	15	Shafter
	16	Sharon
	17	South Hurricane
	18	Vandalia
	19	Wheatland
	20	Wilberton
	MD	St Elmo Comm Pk Dist
	MY	Vandalia Pk Dist
Ford	01	Brenton
	02	Button
	03	Dix
	04	Drummer
	05	Lyman
	06	Mona
	07	Patton
	08	Peach Orchard
	09	Pella
	10	Rogers
	11	Sullivant
	12	Wall
	JZ	Paxton Pk Dist
Franklin	01	Barren
	02	Benton
	03	Browning
	04	Cave
	05	Denning
	06	Eastern
	07	Ewing
	08	Frankfort
	09	Goode
	10	Northern
	11	Six Mile
	12	Tyrone
	AV	Benton Comm Pk Dist
	ER	Frankfort Comm Pk Dist
Fulton	01	Astoria

Hard Copies Uncontrolled

APPENDIX B

TOWNSHIP/ROAD DISTRICT LIST

County	Code	Township Or Road District
Fulton (cont)	02	Banner
	03	Bernadotte
	04	Buckheart
	05	Canton
	06	Cass
	07	Deerfield
	08	Ellisville
	09	Fairview
	10	Farmers
	11	Farmington
	12	Harris
	13	Isabel
	14	Joshua
	15	Kerton
	16	Lee
	17	Lewistown
	18	Liverpool
	19	Orion
	20	Pleasant
	21	Putman
	22	Union
	23	Vermont
	24	Waterford
	25	Woodland
	26	Young Hickory
	AJ	Astoria Pk Dist
	BS	Canton Pk Dist
	EF	Farmington Twp Pk Dist
	HI	Lewistown Twp Pk Dist
	KV	Putnam Twp Pk Dist
	MX	Valley Pk Dist
Gallatin	01	Asbury
	02	Bowlesville
	03	Eagle Creek
	04	Equality
	05	Gold Hill
	06	New Haven
	07	North Fork
	08	Omaha
	09	Ridgway
	10	Shawnee
Greene	01	Athensville
	02	Bluffdale
	03	Carrollton
	04	Kane

Hard Copies Uncontrolled

APPENDIX B

TOWNSHIP/ROAD DISTRICT LIST

County	Code	Township Or Road District
Greene (cont)	05	Linder
	06	Patterson
	07	Rockbridge
	08	Roodhouse
	09	Rubicon
	10	Walkerville
	11	White Hall
	12	Woodville
	13	Wrights
Grundy	01	Aux Sable
	02	Braceville
	03	Erienna
	04	Felix
	05	Garfield
	06	Goodfarm
	07	Goose Lake
	08	Greenfield
	09	Highland
	10	Maine
	11	Mazon
	12	Morris
	13	Nettle Creek
	14	Norman
	15	Saratoga
	16	Vienna
	17	Wauponsee
Hamilton	01	Beaver Creek
	02	Crook
	03	Crouch
	04	Dahlgren
	05	Flannigan
	06	Knights Prairie
	08	Mayberry
	07	Mcleansboro
	09	South Crouch
	10	South Flannigan
	11	South Twigg
	12	Twigg
Hancock	01	Appanoose
	02	Augusta
	03	Bear Creek
	04	Carthage
	05	Chili
	06	Dallas City

Hard Copies Uncontrolled

APPENDIX B

TOWNSHIP/ROAD DISTRICT LIST

County	Code	Township Or Road District
Hancock (cont)	07	Durham
	08	Fountain Green
	09	Hancock
	10	Harmony
	11	Laharpe
	12	Montebello
	13	Nauvoo
	14	Pilot Grove
	15	Pontoosuc
	16	Prairie
	17	Rock Creek
	18	Rocky Run
	21	Sonora
	19	St Albans
	20	St Mary
	22	Walker
	23	Warsaw (Warsaw)
	24	Wilcox
	25	Wythe
	BY	Carthage Pk Dist
	CP	Chili Pk Dist
	DC	Dallas City Pk Dist
	FR	Hamilton Pk Dist
	GW	Laharpe Pk Dist
	IZ	Nauvoo Pk Dist
	NE	Warsaw Pk Dist
Hardin	01	Co Unit Road Dist
Henderson	01	Bald Bluff
	02	Biggsville
	03	Carman
	04	Gladstone
	05	Lomax
	06	Media
	07	Oquawka
	08	Raritan
	09	Rozetta
	10	Stronghurst
	11	Terre Haute
	DC	Dallas City Pk Dist
Henry	01	Alba
	02	Andover
	03	Annawan
	04	Atkinson
	05	Burns

Hard Copies Uncontrolled

APPENDIX B

TOWNSHIP/ROAD DISTRICT LIST

County	Code	Township Or Road District
Henry (cont)	06	Cambridge
	07	Clover
	08	Colona
	09	Cornwall
	10	Edford
	11	Galva
	12	Geneseo
	13	Hanna
	14	Kewanee
	15	Loraine
	16	Lynn
	17	Munson
	18	Osco
	19	Oxford
	20	Phenix
	21	Weller
	22	Western
	23	Wethersfield
	24	Yorktown
	EY	Galva Pk Dist
	EZ	Geneseo Comm Pk Dist
	GR	Kewanee Pk Dist
	GV	Lafayette Pk Dist
	KS	Prophetstown Pk Dist
Iroquois	01	Artesia
	02	Ash Grove
	03	Ashkum
	04	Beaver
	05	Beaverville
	06	Belmont
	07	Chebanse
	08	Concord
	09	Crescent
	10	Danforth
	11	Douglas
	12	Fountain Creek
	13	Iroquois
	14	Loda
	15	Lovejoy
	16	Martinton
	17	Middleport
	18	Milford
	19	Milks Grove
	20	Onarga
	21	Papineau
	22	Pigeon Grove

Hard Copies Uncontrolled

APPENDIX B

TOWNSHIP/ROAD DISTRICT LIST

County	Code	Township Or Road District
Iroquois (cont)	23	Prairie Green
	24	Ridgeland
	25	Sheldon
	26	Stockland
	ZZ	Adjacent State Township
	DQ	Douglas Pk Dist
	IL	Milford Pk Dist
Jackson	01	Bradley
	02	Carbondale
	03	Degognia
	04	Desoto
	05	Elk
	06	Fountain Bluff
	07	Grand Tower
	08	Kinkaid
	09	Levan
	10	Makanda
	11	Murphysboro
	12	Ora
	13	Pomona
	14	Sand Ridge
	15	Somerset
	16	Vergennes
	BU	Carbondale Pk Dist
	FI	Grand Tower Pk Dist
	IX	Murphysboro Pk Dist
Jasper	01	Crooked Creek
	02	Fox
	03	Grandville
	04	Grove
	05	Hunt City
	06	North Muddy
	08	Smallwood
	09	South Muddy
	07	Ste Marie
	10	Wade
	11	Willow Hill
Jefferson	01	Bald Hill
	02	Blissville
	03	Casner
	04	Dodds
	05	Elk Prairie
	06	Farrington
	07	Field

Hard Copies Uncontrolled

APPENDIX B

TOWNSHIP/ROAD DISTRICT LIST

County	Code	Township Or Road District
Jefferson (cont)	08	Grand Prairie
	09	McClellan
	10	Moores Prairie
	11	Mount Vernon
	12	Pendleton
	13	Rome
	14	Shiloh
	15	Spring Garden
	16	Webber
Jersey	01	Elsah
	02	English
	03	Fidelity
	04	Jersey
	05	Mississippi
	06	Otter Creek
	07	Piasa
	08	Quarry
	09	Richwood
	10	Rosedale
	11	Ruyle
JoDaviess	01	Apple River
	02	Berreman
	03	Council Hill
	04	Derinda
	05	Dunleith
	06	East Galena
	07	Elizabeth
	08	Guilford
	09	Hanover
	10	Menominee
	11	Nora
	12	Pleasant Valley
	13	Rawlins
	14	Rice
	15	Rush
	16	Scales Mound
	17	Stockton
	18	Thompson
	19	Vinegar Hill
	20	Wards Grove
	21	Warren
	22	West Galena
	23	Woodbine
	ZZ	Adjacent State Township
	BB	Black Hawk Pk Dist

Hard Copies Uncontrolled

APPENDIX B

TOWNSHIP/ROAD DISTRICT LIST

County	Code	Township Or Road District
JoDaviess (cont)	DT	Dunleith Pk Dist
	MH	Stockton Twp Mem Pk Dist
Johnson	01	Co Unit Road Dist
Kane	01	Aurora
	02	Batavia
	03	Big Rock
	04	Blackberry
	05	Burlington
	06	Campton
	07	Dundee
	08	Elgin
	09	Geneva
	10	Hampshire
	11	Kaneville
	12	Plato
	13	Rutland
	14	St Charles
	15	Sugar Grove
	16	Virgil
	AQ	Batavia Pk Dist
	BA	Big Rock Sugar Gr Pk Dist
	BL	Burlington Pk Dist
	DS	Dundee Twp Pk Dist
	EL	For Pres Dist Of Kane Co
	EQ	Fox Valley Pk Dist
	FA	Geneva Pk Dist
	FS	Hampshire Twp Pk Dist
	GF	Huntley Pk Dist
	MB	St Charles Pk Dist
Kankakee	01	Aroma
	02	Bourbonnais
	03	Essex
	04	Ganeer
	05	Kankakee
	06	Limestone
	07	Manteno
	08	Momence
	09	Norton
	10	Otto
	11	Pembroke
	12	Pilot
	13	Rockville
	15	Salina
	14	St Anne

Hard Copies Uncontrolled

APPENDIX B

TOWNSHIP/ROAD DISTRICT LIST

County	Code	Township Or Road District
Kankakee (cont)	16	Sumner
	17	Yellowhead
	ZZ	Adjacent State Township
	GN	Kankakee Valley Pk Dist
	HM	Limestone Pk Dist
	IP	Momence Pk Dist
Kendall	01	Big Grove
	02	Bristol
	03	Fox
	04	Kendall
	05	Lisbon
	06	Little Rock
	07	Na-Au-Say
	08	Oswego
	09	Seward
	GP	Kendall Co For Pres Dist
	JR	Oswegoland Pk Dist
	LR	Sandwich Pk Dist
Knox	01	Cedar
	02	Chestnut
	03	Copley
	04	Elba
	05	Galesburg
	56	Galesburg City (Galesburg)
	07	Haw Creek
	08	Henderson
	09	Indian Point
	10	Knox
	11	Lynn
	12	Maquon
	13	Ontario
	14	Orange
	15	Persifer
	16	Rio
	17	Salem
	18	Sparta
	19	Truro
	20	Victoria
	21	Walnut Grove
	GV	Lafayette Pk Dist
Lake	01	Antioch
	02	Avon
	03	Benton
	04	Cuba

Hard Copies Uncontrolled

APPENDIX B

TOWNSHIP/ROAD DISTRICT LIST

County	Code	Township Or Road District
Lake (cont)	96	Deerfield (Deerfield)
	06	Ela
	07	Fremont
	08	Grant
	09	Lake Villa
	10	Libertyville
	11	Newport
	12	Shields
	13	Vernon
	14	Warren
	15	Wauconda
	16	Waukegan
	17	West Deerfield
	68	Zion (Zion)
	ZZ	Adjacent State Township
	AF	Antioch Pk & Rec Dept
	AM	Barrington Cntryside Pk Dist
	AN	Barrington Pk Dist
	BK	Buffalo Grove Pk Dist
	DI	Deerfield Pk Dist
	EP	Foss Pk Dist
	FJ	Grandwood Pk Dist
	FM	Grayslake Comm Pk Dist
	FQ	Gurnee Pk Dist
	GY	Lake Barrington Pk Dist
	GZ	Lake Bluff Pk Dist
	HA	Lake Co For Pres Dist
	HU	Long Grove Pk Dist
	IW	Mundelein Pk & Rec Dist
	JU	Pk Dist Of Highland Pk
	LN	Round Lake Area Pk Dist
	NB	Vernon Hills Pk Dist
	NH	Wauconda Pk Dist
	NI	Waukegan Pk Dist
	NR	Wheeling Pk Dist
	NT	Wildwood Pk Dist
	PD	Zion Pk Dist
LaSalle	01	Adams
	02	Allen
	03	Brookfield
	04	Bruce
	05	Dayton
	06	Deer Pk
	07	Dimmick
	08	Eagle
	09	Earl

Hard Copies Uncontrolled

APPENDIX B

TOWNSHIP/ROAD DISTRICT LIST

County	Code	Township Or Road District
LaSalle (cont)	10	Eden
	11	Fall River
	12	Farm Ridge
	13	Freedom
	14	Grand Rapids
	15	Groveland
	16	Hope
	17	Lasalle
	18	Manlius
	19	Mendota
	20	Meriden
	21	Miller
	22	Mission
	23	Northville
	24	Ophir
	25	Osage
	26	Ottawa
	27	Otter Creek
	28	Peru
	29	Richland
	30	Rutland
	31	Serena
	32	South Ottawa
	33	Troy Grove
	34	Utica
	35	Vermilion
	36	Wallace
	37	Waltham
Lawrence	01	Allison
	02	Bond
	03	Bridgeport
	04	Christy
	05	Denison
	06	Lawrence
	07	Lukin
	08	Petty
	09	Russell
	HD	Lanterman Pk Dist
	HE	Lawrence Pk Dist
Lee	01	Alto
	02	Amboy
	03	Ashton
	04	Bradford
	05	Brooklyn
	06	China

Hard Copies Uncontrolled

APPENDIX B

TOWNSHIP/ROAD DISTRICT LIST

County	Code	Township Or Road District
Lee (cont)	07	Dixon
	08	East Grove
	09	Hamilton
	10	Harmon
	11	Lee Center
	12	Marion
	13	May
	14	Nachusa
	15	Nelson
	16	Palmyra
	17	Reynolds
	18	South Dixon
	19	Sublette
	20	Viola
	21	Willow Creek
	22	Wyoming
	23	Franklin Grove
	DN	Dixon Pk Dist
	ND	Walnut Pk Dist
Livingston	01	Amity
	02	Avoca
	03	Belle Prairie
	04	Broughton
	05	Charlotte
	06	Chatsworth
	07	Dwight
	08	Eppards Point
	09	Esmen
	10	Fayette
	11	Forrest
	12	Germanville
	13	Indian Grove
	14	Long Point
	15	Nebraska
	16	Nevada
	17	Newtown
	18	Odell
	19	Owego
	20	Pike
	21	Pleasant Ridge
	22	Pontiac
	23	Reading
	24	Rooks Creek
	25	Round Grove
	26	Saunemin
	27	Sullivan

Hard Copies Uncontrolled

APPENDIX B

TOWNSHIP/ROAD DISTRICT LIST

County	Code	Township Or Road District
Livingston (cont)	28	Sunbury
	29	Union
	30	Waldo
	BT	Caps Pk Dist
	EI	Flanagan Comm Pk Dist
	JM	Odell Pk Dist
	KG	Pike Eppards Point Pk Dist
Logan	01	Aetna
	02	Atlanta
	03	Broadwell
	04	Chester
	05	Corwin
	06	East Lincoln
	07	Elkhart
	08	Eminence
	09	Hurlbut
	10	Laenna
	11	Lake Fork
	12	Mount Pulaski
	13	Oran
	14	Orvil
	15	Prairie Creek
	16	Sheridan
	17	West Lincoln
	AH	Armington Comm Pk Dist
	AK	Atlanta-Eminence Pk Dist
	CK	Chestnut Beason Pk Dist
	EC	Emden Pk Dist
	HN	Lincoln Pk Dist
	IU	Mount Pulaski Twp Pk Dist
McDonough	01	Bethel
	02	Blandinsville
	03	Bushnell
	04	Chalmers
	06	Eldorado
	07	Emmet
	08	Hire
	09	Industry
	10	Lamoine
	11	Macomb
	62	Macomb City (Macomb)
	13	Mound
	14	New Salem
	15	Prairie City
	16	Sciota

Hard Copies Uncontrolled

APPENDIX B

TOWNSHIP/ROAD DISTRICT LIST

County	Code	Township Or Road District
McDonough (cont)	17	Scotland
	05	Twp Dist #01
	19	Walnut Grove
	BC	Blandinsville Pk Dist
	HV	Macomb Pk Dist
McHenry	01	Alden
	02	Algonquin
	03	Burton
	04	Chemung
	05	Coral
	06	Dorr
	07	Dunham
	08	Grafton
	09	Greenwood
	10	Hartland
	11	Hebron
	13	Marengo
	12	McHenry
	14	Nunda
	15	Richmond
	16	Riley
	17	Seneca
	ZZ	Adjacent State Township
	AM	Barrington Cntryside Pk Dist
	BZ	Cary Pk Dist
	DA	Crystal Lake Manor Pk Dist
	DB	Crystal Lake Pk Dist
	GF	Huntley Pk Dist
	HY	Marengo Pk Dist
	IF	Mchenry Co Cons Dist
McLean	01	Allin
	02	Anchor
	03	Arrowsmith
	04	Bellflower
	05	Bloomington
	56	Bloomington City (Bloomington)
	07	Blue Mound
	08	Cheneys Grove
	09	Chenoa
	10	Cropsey
	11	Dale
	12	Danvers
	13	Dawson
	14	Downs
	15	Dry Grove

Hard Copies Uncontrolled

APPENDIX B

TOWNSHIP/ROAD DISTRICT LIST

County	Code	Township Or Road District
McLean (cont)	16	Empire
	17	Funks Grove
	18	Gridley
	19	Hudson
	20	Lawndale
	21	Lexington
	22	Martin
	23	Money Creek
	24	Mount Hope
	25	Normal
	26	Old Town
	27	Randolph
	28	Towanda
	29	West
	30	White Oak
	31	Yates
	AD	Allin Twp Pk Dist
	HF	Leroy Comm Pk Dist
	HJ	Lexington Pk Dist
Macon	01	Austin
	02	Blue Mound
	03	Decatur
	04	Friends Creek
	05	Harristown
	06	Hickory Point
	07	Illini
	08	Long Creek
	09	Maroa
	10	Milam
	11	Mt Zion
	12	Niantic
	13	Oakley
	14	Pleasant View
	15	South Macon
	16	South Wheatland
	17	Whitmore
	DH	Decatur Pk Dist
	EX	Friends Creek Pk Dist
	GH	Illini Twp Pk Dist
	HW	Macon Co Cons Dist
	NS	Whitmore Pk Dist
Macoupin	01	Barr
	02	Bird
	03	Brighton
	04	Brushy Mound

Hard Copies Uncontrolled

APPENDIX B

TOWNSHIP/ROAD DISTRICT LIST

County	Code	Township Or Road District
Macoupin (cont)	05	Bunker Hill
	06	Cahokia
	07	Carlinville
	08	Chesterfield
	09	Dorchester
	10	Gillespie
	11	Girard
	12	Hillyard
	13	Honey Point
	14	Mount Olive
	15	Nilwood
	16	North Otter
	17	North Palmyra
	18	Polk
	19	Scottville
	20	Shaws Point
	21	Shipman
	22	South Otter
	23	South Palmyra
	24	Staunton
	25	Virden
	26	Western Mound
	BV	Carlinville Pk Dist
Madison	01	Alhambra
	52	Alton (Alton)
	03	Chouteau
	04	Collinsville
	05	Edwardsville
	06	Fort Russell
	07	Foster
	08	Godfrey (Godfrey)
	59	Granite City (Granite City)
	10	Hamel
	11	Helvetia
	12	Jarvis
	13	Leef
	14	Marine
	15	Moro
	16	Nameoki
	17	New Douglas
	18	Olive
	19	Omphghent
	20	Pin Oak
	22	Saline
	21	St Jacob
	23	Venice

Hard Copies Uncontrolled

APPENDIX B

TOWNSHIP/ROAD DISTRICT LIST

County	Code	Township Or Road District
Madison (cont)	24	Wood River
	FK	Granite City Pk Dist
	LP	Roxana Comm Pk Dist
	ME	St Jacob Twp Pk Dist
	MV	Tri-Twp Pk Dist
	MZ	Venice Pk Dist
Marion	01	Alma
	02	Carrigan
	03	Centralia
	04	Foster
	05	Haines
	06	Iuka
	07	Kinmundy
	08	Meacham
	09	Odin
	10	Omega
	11	Patoka
	12	Raccoon
	13	Romine
	14	Salem
	15	Sandoval
	16	Stevenson
	17	Tonti
Marshall	01	Bell Plain
	02	Bennington
	03	Evans
	04	Henry
	05	Hopewell
	06	Lacon
	07	Laprairie
	08	Richland
	09	Roberts
	10	Saratoga
	11	Steuben
	12	Whitefield
	GX	Lacon Pk Dist
	MT	Toluca Pk Dist
Mason	01	Allens Grove
	02	Bath
	03	Crane Creek
	04	Forest City
	05	Havana
	06	Kilbourne
	07	Lynchburg

Hard Copies Uncontrolled

APPENDIX B

TOWNSHIP/ROAD DISTRICT LIST

County	Code	Township Or Road District
Mason (cont)	08	Manito
	09	Mason City
	10	Pennsylvania
	11	Quiver
	12	Salt Creek
	13	Sherman
	DW	Easton Comm Pk Dist
	IC	Mason City Comm Pk Dist
Massac	01	Co Unit Road Dist
Menard	01	Road Dist #01
	02	Road Dist #02
	03	Road Dist #03
	04	Road Dist #04
	05	Road Dist #05
	06	Road Dist #06
	07	Road Dist #07
	58	Road Dist #08 (Petersburg)
	09	Road Dist #09
	10	Road Dist #10
	62	Road Dist #12 (Tallula)
	63	Road Dist #13 (Athens)
	64	Road Dist #14 (Greenview)
Mercer	01	Abington
	02	Duncan
	03	Eliza
	04	Greene
	05	Keithsburg
	06	Mercer
	07	Millersburg
	08	New Boston
	09	North Henderson
	10	Ohio Grove
	11	Perryton
	12	Preemption
	13	Richland Grove
	14	Rivoli
	15	Suez
	AC	Aledo Pk Dist
	LU	Seaton Pk Dist
Monroe	01	Road Dist #01
	02	Road Dist #02
	03	Road Dist #03
	04	Road Dist #04

Hard Copies Uncontrolled

APPENDIX B

TOWNSHIP/ROAD DISTRICT LIST

County	Code	Township Or Road District
Monroe (cont)	05	Road Dist #05
	06	Road Dist #06
	07	Road Dist #07
	08	Road Dist #08
	09	Road Dist #09
	10	Road Dist #10
	NG	Waterloo Pk Dist
Montgomery	01	Audubon
	02	Bois D Arc
	03	Butler Grove
	04	East Fork
	05	Fillmore
	06	Grisham
	07	Harvel
	08	Hillsboro
	09	Irving
	10	Nokomis
	11	North Litchfield
	12	Pitman
	13	Raymond
	14	Rountree
	15	South Fillmore
	16	South Litchfield
	17	Walshville
	18	Witt
	19	Zanesville
	HR	Litchfield Pk Dist
	JD	Nokomis Comm Mem Pk Dist
	KY	Raymond Pk Dist
Morgan	01	Road Dist #01
	02	Road Dist #02
	03	Road Dist #03
	04	Road Dist #04
	05	Road Dist #05
	06	Road Dist #06
	08	Road Dist #08
	09	Road Dist #09
	10	Road Dist #10
	11	Road Dist #11
	12	Road Dist #12
	13	Road Dist #13
	64	Road Dist #14 (Jacksonville)
	65	Road Dist #15 (So Jacksonville)
Moultrie	01	Dora
	02	East Nelson

Hard Copies Uncontrolled

APPENDIX B

TOWNSHIP/ROAD DISTRICT LIST

County	Code	Township Or Road District
Moultrie (Cont)	03	Jonathan Creek
	04	Lovington
	05	Lowe
	06	Marrowbone
	07	Sullivan
	08	Whitley
	AI	Arthur Comm Pk Dist
	IB	Marrowbone Twp Pk Dist
Ogle	01	Brookville
	02	Buffalo
	03	Byron
	04	Dement
	05	Eagle Point
	06	Flagg
	07	Forreston
	08	Grand Detour
	09	Lafayette
	10	Leaf River
	11	Lincoln
	12	Lynnville
	13	Marion
	14	Maryland
	15	Monroe
	16	Mount Morris
	26	Oregon-Nashua
	19	Pine Creek
	20	Pine Rock
	21	Rockvale
	22	Scott
	23	Taylor
	24	White Rock
	25	Woosung
	BP	Byron Forest Preserve Dist
	BQ	Byron Pk Dist
	EH	Flagg-Rochelle Comm Pk Dist
	JP	Oregon Pk Dist
Peoria	01	Akron
	02	Brimfield
	03	Chillicothe
	04	Elmwood
	05	Hallock
	06	Hollis
	07	Jubilee
	08	Kickapoo
	09	Limestone
	10	Logan

Hard Copies Uncontrolled

APPENDIX B

TOWNSHIP/ROAD DISTRICT LIST

County	Code	Township Or Road District
Peoria (cont)	11	Medina
	12	Millbrook
	64	Peoria City (Peoria)
	15	Princeville
	16	Radnor
	17	Richwoods
	18	Rosefield
	19	Timber
	20	Trivoli
	13	West Peoria
	CQ	Chillicothe Twp Pk Dist
	GC	Hollis Pk Dist
	KL	Pleasure Dr & Pk Dist Of Peo
Perry	01	Road Dist #01
	58	Road Dist #01-A (Duquoin)
	63	Road Dist #01-B (Tamaroa)
	64	Road Dist #01-C (St Johns)
	04	Road Dist #04
	61	Road Dist #04-A (Cutler)
	62	Road Dist #04-B (Willisville)
	02	Road Dist #04-2
	03	Road Dist #04-3
	05	Road Dist #05-2
	06	Road Dist #05-3
	57	Road Dist #05-3a (Pinckneyville)
	09	Road Dist #06-2
	10	Road Dist #06-3
	15	Co Unit Road Dist
Piatt	01	Bement
	02	Blue Ridge
	03	Cerro Gordo
	04	Goose Creek
	05	Monticello
	06	Sangamon
	07	Unity
	08	Willow Branch
	KE	Piatt Co For Pres Dist
Pike	01	Atlas
	02	Barry
	03	Chambersburg
	04	Cincinnati
	05	Derry
	06	Detroit
	07	Fairmount
	08	Flint

Hard Copies Uncontrolled

APPENDIX B

TOWNSHIP/ROAD DISTRICT LIST

County	Code	Township Or Road District
Pike (cont)	09	Griggsville
	10	Hadley
	11	Hardin
	12	Kinderhook
	13	Levee
	14	Martinsburg
	15	Montezuma
	17	New Salem
	16	Newburg
	18	Pearl
	19	Perry
	20	Pittsfield
	21	Pleasant Hill
	22	Pleasant Vale
	23	Ross
	24	Spring Creek
	FP	Griggsville Pk Dist
	KJ	Pleasant Hill Pk Dist
Pope	01	Road Dist #01
	02	Road Dist #02
	60	Road Dist #10 (Golconda)
Pulaski	01	Co Unit Road Dist
Putnam	01	Granville
	02	Hennepin
	03	Magnolia
	04	Senachwine
	FY	Hennepin Pk Dist
	KU	Putnam Co Cons Dist
Randolph	01	Road Dist #01
	02	Road Dist #02
	03	Road Dist #03
	04	Road Dist #04
Richland	01	Bonpas
	02	Claremont
	03	Decker
	04	Denver
	05	German
	06	Madison
	07	Noble
	08	Olney
	09	Preston
Rock Island	01	Andalusia

Hard Copies Uncontrolled

APPENDIX B

TOWNSHIP/ROAD DISTRICT LIST

County	Code	Township Or Road District
Rock Island (cont)	02	Black Hawk
	03	Bowling
	04	Buffalo Prairie
	05	Canoe Creek
	06	Coal Valley
	07	Coe
	08	Cordova
	09	Drury
	10	Edgington
	11	Hampton
	62	Moline
	13	Port Byron
	64	Rock Island
	15	Rural
	16	South Moline
	17	South Rock Island
	18	Zuma
	LF	Rock Island For Pres Dist
St. Clair	51	Belleville (Belleville)
	02	Canteen
	03	Caseyville
	04	Centreville
	55	East St Louis (East St Louis)
	06	Englemann
	07	Fayetteville
	08	Freeburg
	09	Lebanon
	10	Lenzburg
	11	Marissa
	12	Mascoutah
	13	Millstadt
	14	New Athens
	15	O'fallon
	16	Prairie Dulong
	18	Shiloh Valley
	19	Smithton
	17	St Clair
	95	Stites
	21	Stookey
	22	Sugar Loaf
	CE	Centreville Rec & Pks Dept
	DV	East St Louis Pk Dist
	EE	Fairmont City Pk Dist
	GE	Horner Pk Dist
	JA	New Athens Pk Dist
	MG	Stites Twp Pk Dist

Hard Copies Uncontrolled

APPENDIX B

TOWNSHIP/ROAD DISTRICT LIST

County	Code	Township Or Road District
Saline	01	Brushy
	02	Carrier Mills
	03	Cottage
	04	East Eldorado
	05	Galatia
	06	Harrisburg
	07	Independence
	08	Long Branch
	09	Mountain
	10	Raleigh
	11	Rector
	12	Stonefort
	13	Tate
	BX	Carrier Mills Twp Pk Dist
	DY	Eldrdo-Raleigh Pleasure Dr & Pk Dis
	FU	Harrisburg Twp Pk Dist
Sangamon	01	Auburn
	02	Ball
	03	Buffalo Hart
	54	Capital (Springfield)
	05	Cartwright
	06	Chatham
	07	Clear Lake
	08	Cooper
	09	Cotton Hill
	10	Curran
	11	Divernon
	12	Fancy Creek
	13	Gardner
	14	Illiopolis
	15	Island Grove
	16	Lanesville
	17	Loami
	18	Maxwell
	19	Mechanicsburg
	20	New Berlin
	21	Pawnee
	22	Rochester
	24	Springfield
	25	Talkington
	26	Williams
	27	Woodside
	MA	Springfield Pk Dist
Schuyler	01	Bainbridge
	02	Birmingham
	03	Brooklyn

Hard Copies Uncontrolled

APPENDIX B

TOWNSHIP/ROAD DISTRICT LIST

County	Code	Township Or Road District
Schuyler (cont)	04	Browning
	05	Buena Vista
	06	Camden
	07	Frederick
	08	Hickory
	09	Huntsville
	10	Littleton
	11	Oakland
	12	Rushville
	13	Woodstock
Scott	01	Road Dist #01
	02	Road Dist #02
	03	Road Dist #03
	04	Road Dist #04
	05	Road Dist #05
	06	Road Dist #06
	07	Road Dist #07
Shelby	01	Ash Grove
	02	Big Spring
	03	Clarksburg
	04	Cold Spring
	05	Dry Point
	06	Flat Branch
	07	Herrick
	08	Holland
	09	Lakewood
	10	Moweaqua
	11	Oconee
	12	Okaw
	13	Penn
	14	Pickaway
	15	Prairie
	16	Richland
	17	Ridge
	18	Rose
	19	Rural
	20	Shelbyville
	21	Sigel
	22	Todds Point
	23	Tower Hill
	24	Windsor
	IV	Moweaqua Twp Pk Dist
Stark	01	Elmira
	02	Essex
	03	Goshen

Hard Copies Uncontrolled

APPENDIX B

TOWNSHIP/ROAD DISTRICT LIST

County	Code	Township Or Road District
Stark (cont)	04	Osceola
	05	Penn
	06	Toulon
	07	Valley
	08	West Jersey
	BH	Bradford Pk Dist
	GV	Lafayette Pk Dist
Stephenson	01	Buckeye
	02	Dakota
	03	Erin
	04	Florence
	55	Freeport (Freeport)
	06	Harlem
	07	Jefferson
	08	Kent
	09	Lancaster
	10	Loran
	11	Oneco
	12	Ridott
	13	Rock Grove
	14	Rock Run
	15	Silver Creek
	16	Waddams
	17	West Point
	18	Winslow
	ZZ	Adjacent State Township
	EW	Freeport Pk Dist
	HH	Lena Comm Pk Dist
	KA	Pearl City Pk Dist
	NY	Winslow Pk Dist
Tazewell	01	Boynton
	02	Cincinnati
	03	Deer Creek
	04	Delavan
	05	Dillon
	06	Elm Grove
	07	Fondulac
	08	Groveland
	09	Hittle
	10	Hopedale
	11	Little Mackinaw
	12	Mackinaw
	13	Malone
	14	Morton
	15	Pekin
	16	Sand Prairie

Hard Copies Uncontrolled

APPENDIX B

TOWNSHIP/ROAD DISTRICT LIST

County	Code	Township Or Road District
Tazewell (cont)	17	Spring Lake
	18	Tremont
	19	Washington
	AH	Armington Comm Pk Dist
	DK	Delavan Twp Pk Dist
	EC	Emden Pk Dist
	EJ	Fon Du Lac Pk Dist
	IS	Morton Pk Dist
	KB	Pekin Pk Dist
	KK	Pleasant View Pk Dist
	LY	South Pekin Pk Dist
	MP	Tazewell Co For Pres Dist
	NF	Washington Pk Dist
Union	01	Co Unit Road Dist
Vermilion	01	Blount
	02	Butler
	03	Carroll
	04	Catlin
	05	Danville
	06	Elwood
	07	Georgetown
	08	Grant
	09	Jamaica
	10	Love
	11	McKendree
	12	Middlefork
	13	Newell
	14	Oakwood
	15	Pilot
	16	Ross
	17	Sidell
	18	South Ross
	19	Vance
	ZZ	Adjacent State Township
	DD	Danville Pk & Rec Dept
	LL	Rossville Pk Dist
	NA	Vermilion Co Cons Dist
Wabash	01	Road Dist #01
	02	Road Dist #02
	03	Road Dist #03
	04	Road Dist #04
	05	Road Dist #05
	06	Road Dist #06
	57	Road Dist #07 (Mount Carmel)
	58	Road Dist #08 (Bellmont)

Hard Copies Uncontrolled

APPENDIX B

TOWNSHIP/ROAD DISTRICT LIST

County	Code	Township Or Road District
Wabash (Cont)	59	Road Dist #09 (Keensburg)
Warren	01	Berwick
	02	Coldbrook
	03	Ellison
	04	Floyd
	05	Greenbush
	06	Hale
	07	Kelly
	08	Lenox
	09	Monmouth
	10	Point Pleasant
	11	Roseville
	12	Spring Grove
	13	Sumner
	14	Swan
	15	Tompkins
	GU	Kirkwood Pk Dist
	IQ	Monmouth Pk Dist
Washington	01	Ashley
	02	Beaucoup
	03	Bolo
	04	Covington
	05	Dubois
	06	Hoyleton
	07	Irvington
	08	Johannisburg
	09	Lively Grove
	10	Nashville
	11	Oakdale
	12	Okawville
	13	Pilot Knob
	14	Plum Hill
	15	Richview
	16	Venedy
	II	Memorial Pk Dist
Wayne	01	Arrington
	02	Barnhill
	03	Bedford
	04	Berry
	05	Big Mound
	06	Elm River
	07	Four Mile
	08	Garden Hill
	09	Grover

Hard Copies Uncontrolled

APPENDIX B

TOWNSHIP/ROAD DISTRICT LIST

County	Code	Township Or Road District
Wayne (Cont)	10	Hickory Hill
	11	Indian Prairie
	12	Jasper
	13	Keith
	14	Lamard
	15	Leech
	16	Massilon
	17	Mount Erie
	18	Orchard
	19	Orel
	20	Zif
	ED	Fairfield Pk Dist
White	01	Burnt Prairie
	02	Carmi
	03	Emma
	04	Enfield
	05	Gray
	06	Hawthorne
	07	Heralds Prairie
	08	Indian Creek
	09	Mill Shoals
	10	Phillips
Whiteside	01	Albany
	02	Clyde
	03	Coloma
	04	Erie
	05	Fenton
	06	Fulton
	07	Garden Plain
	08	Genesee
	09	Hahnaman
	10	Hopkins
	11	Hume
	12	Jordan
	13	Lyndon
	14	Montmorency
	15	Mount Pleasant
	16	Newton
	17	Portland
	18	Prophetstown
	19	Sterling
	20	Tampico
	21	Union Grove
	22	Ustick
	CU	Coloma Twp Pk Dist
	IM	Milledgeville Pk Dist

Hard Copies Uncontrolled

APPENDIX B

TOWNSHIP/ROAD DISTRICT LIST

County	Code	Township Or Road District
Whiteside (cont)	KS	Prophetstown Pk Dist
	MF	Sterling Pk Dist
	ND	Walnut Pk Dist
Will	01	Channahon
	02	Crete
	03	Custer
	04	Dupage
	05	Florence
	06	Frankfort
	07	Green Garden
	08	Homer
	09	Jackson
	10	Joliet
	11	Lockport
	12	Manhattan
	13	Monee
	14	New Lenox
	15	Peotone
	16	Plainfield
	17	Reed
	18	Troy
	19	Washington
	20	Wesley
	21	Wheatland
	22	Will
	23	Wilmington
	24	Wilton
	ZZ	Adjacent State Township
	BF	Bolingbrook Pk Dist
	CH	Channahon Comm Pk Dist
	CY	Crete Pk Dist
	CZ	Crete Rural Pk Dist
	EM	For Pres Dist Of Will Co
	ES	Frankfort Pk Dist
	ET	Frankfort Square Pk Dist
	GJ	Island Pk Dist
	GM	Joliet Pk Dist
	HS	Lockport Twp Pk Dist
	HX	Manhattan Pk Dist
	IN	Mokena Comm Pk Dist
	IY	Naperville Pk Dist
	JB	New Lenox Pk Dist
	KC	Peotone Pk Dist
	JX	Pk Forest Rec & Pks Dept
	KH	Plainfield Twp Pk Dist
	LI	Romeoville Rec Dept
	MQ	Tinley Pk Dist

Hard Copies Uncontrolled

APPENDIX B

TOWNSHIP/ROAD DISTRICT LIST

County	Code	Township Or Road District
Williamson	01	Co Unit Road Dist
	FZ	Herrin Pk Dist
	HZ	Marion Pk Dist
Winnebago	01	Burritt
	02	Cherry Valley
	03	Durand
	04	Harlem
	05	Harrison
	06	Laona
	07	Owen
	08	Pecatonica
	09	Rockford
	10	Rockton
	11	Roscoe
	12	Seward
	13	Shirland
	14	Winnebago
	ZZ	Adjacent State Township
	LG	Rockford Pk Dist
	MK	Sumner Pk Dist
	NW	Winnebago Co For Pres Dist
Woodford	01	Cazenovia
	02	Clayton
	03	Cruger
	04	El Paso
	05	Greene
	06	Kansas
	07	Linn
	08	Metamora
	09	Minonk
	10	Montgomery
	11	Olio
	12	Palestine
	13	Panola
	14	Partridge
	15	Roanoke
	16	Spring Bay
	17	Worth
	FL	Grant Memorial Pk Dist
	IJ	Metamora Pk Dist
	LD	Roanoke Pk Dist

Hard Copies Uncontrolled

APPENDIX C

CLARIFICATION OF DATA ITEMS

ITEM	FIGURE(S)	PAGE
Abbreviations		C-1
General Bridge Types	2.01 – 2.15	C-2 thru C-16
Length Measurements	3.1	C-17
Width Measurements	4.1	C-18
Culvert Examples	4.2	C-19
Horizontal Clearance	4.3	C-20
Minimum Vertical Clearance	5.1	C-21
Minimum Vertical Underclearance	6.1	C-22
10-Foot Vertical Clearance	7.1	C-23
Sidewalk Width On	8.1	C-24
Minimum Lateral Underclearance	9.1	C-25
Length of Replaced Bridges	10.1	C-26

Hard Copies Uncontrolled

Suggested Abbreviations For Descriptive Items

ALT	–	Alternate	LN	–	Lane(s)
AV	–	Avenue	MI	–	Mile(s)
BL	–	Boulevard	N	–	North
BR	–	Bridge	OVR	–	Over
BYP	–	Bypass	PK	–	Parkway
CR	–	Circle	PL	–	Place
CL	–	Corporate Limit	RR	–	Railroad
CO	–	County	RRX	–	Railroad Crossing
COV	–	Covered	RP	–	Ramp
CT	–	Court	RV	–	River
CTY	–	City	RD	–	Road
DR	–	Drive	RDD	–	Road District
E	–	East	S	–	South
FR	–	From	ST	–	Street
FRNT	–	Frontage	TR	–	Terrace
I	–	Interstate	TWP	–	Township
ILL	–	Illinois	UDR	–	Under
JCT	–	Junction	W	–	West

The abbreviations for the intermediate compass points may be formed by combining the abbreviations for the cardinal points.
Example: Northeast = NE; South Southwest = SSW.

The direction abbreviations can be prefixed to CL to specify a particular corporate limit.
Example: East Corporate Limits = ECL.

Abbreviations for words not on this list may be used, provided their meanings are obvious and not easily confused with others.

Hard Copies Uncontrolled

Concrete Bridge Types

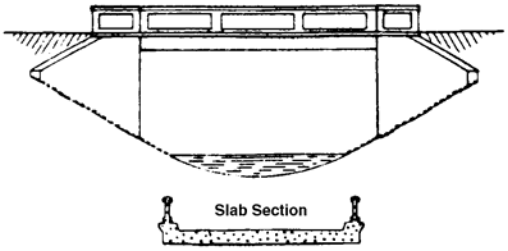

Simple Span
Reinforced Concrete Slab
(101)

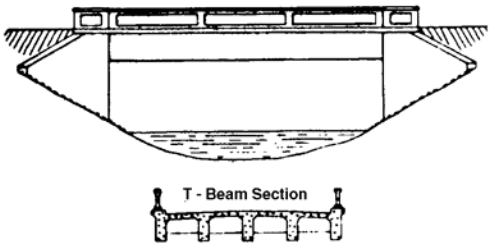

Simple Span
Reinforced Concrete Deck Girder
(104)

Filled Spandrel Concrete Arch
(111)

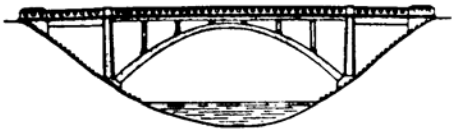

Open Spandrel Concrete Arch
(125)

Rigid Frame Concrete (107)
3-Sided Structure Precast Concrete Not Prestressed (A07)

Note: Coding for items 43 & 44 indicated in parentheses on Figures 2.01-2.12

Figure 2.01

Hard Copies Uncontrolled

Concrete Bridge Types (Continued)

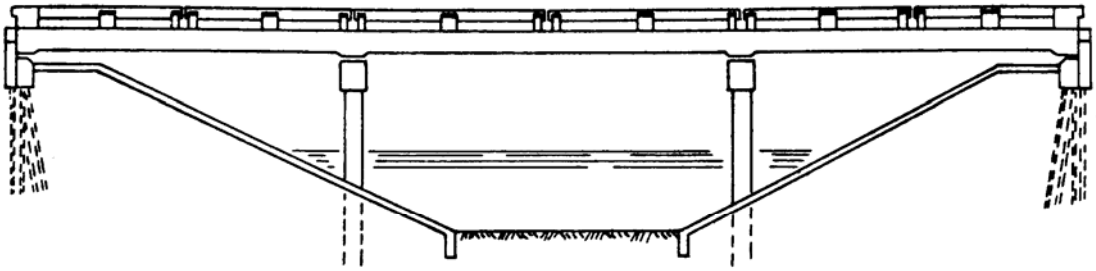

Elevation

Cross Section

Continuous R.C. Slab

(201)

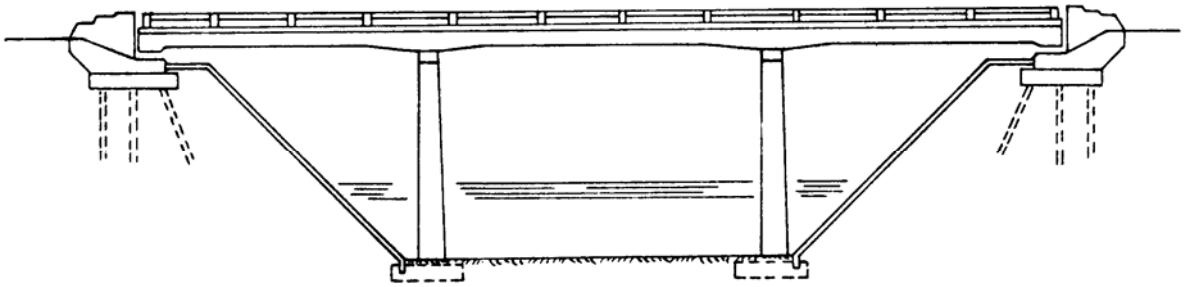

Elevation

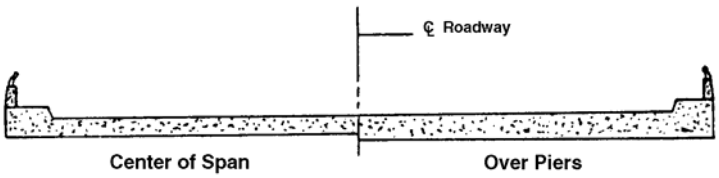

Cross Section

Continuous R.C. Slab

(Haunched)

(201)

Figure 2.02

Hard Copies Uncontrolled

Concrete Bridge Types (Continued)

Elevation

(3 Span Continuous)

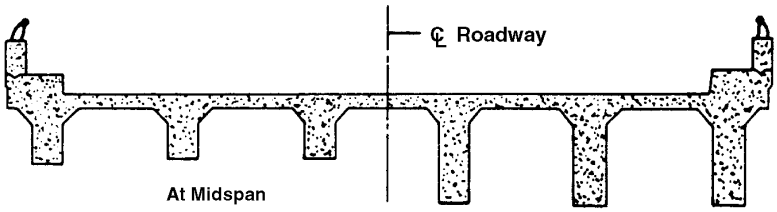

Cross Section

Continuous R.C. Deck Girder
(Haunched)
(204)

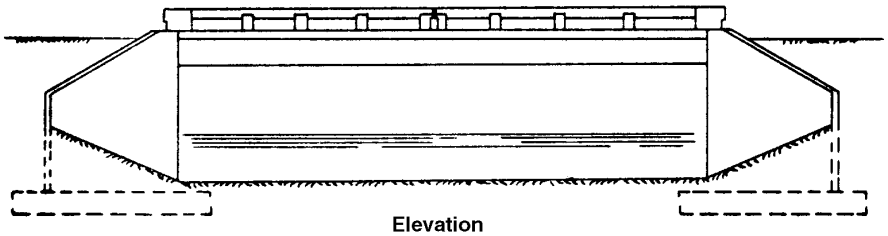

Elevation

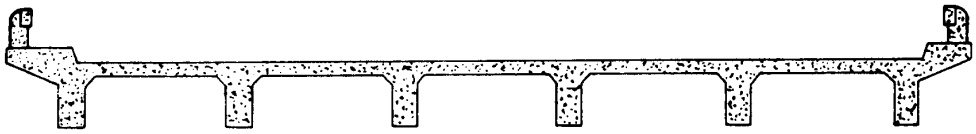

Cross Section

Simple Span R.C. Deck Girder
(104)

Figure 2.03

Hard Copies Uncontrolled

Concrete Bridge Types (Continued)

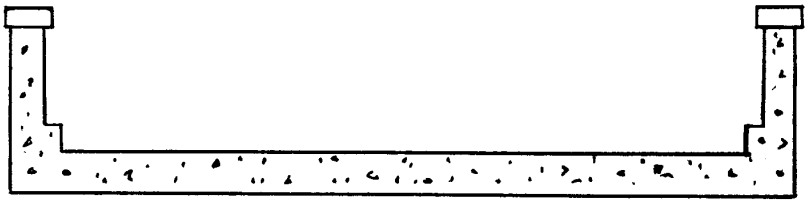

Concrete Thru Girder Without Floor Beam System
Simple Span (124)
Continuous Span (224)

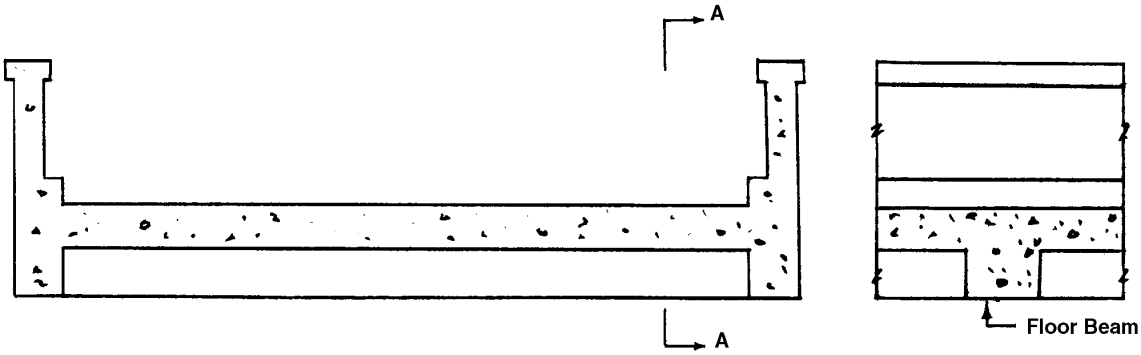

Concrete Thru Girder & Floor Beam System
Simple Span (103)
Continuous Span (203)

Sec. A-A

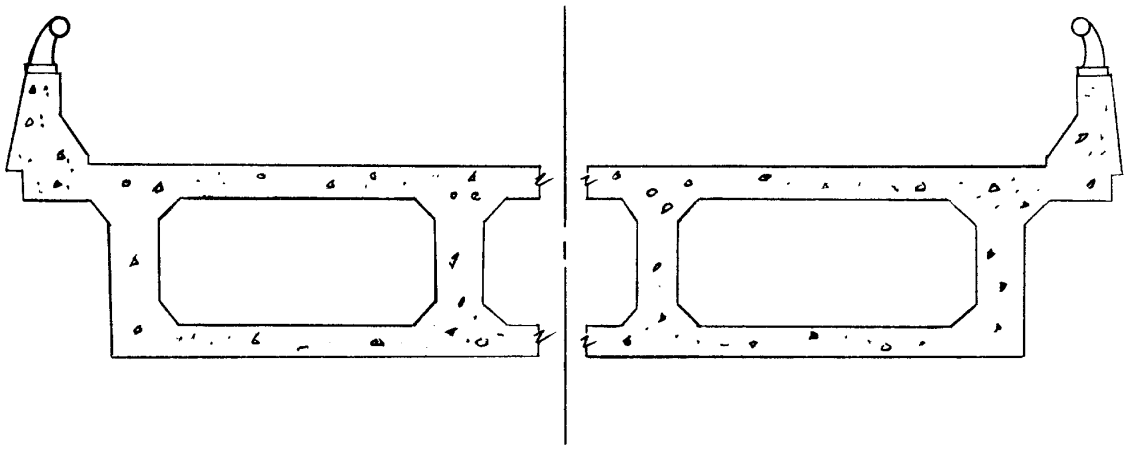

Cast-In-Place R.C. Box Girder

Simple Span (105)
Continuous Span (205)

Figure 2.04

Hard Copies Uncontrolled

Concrete Bridge Types (Continued)

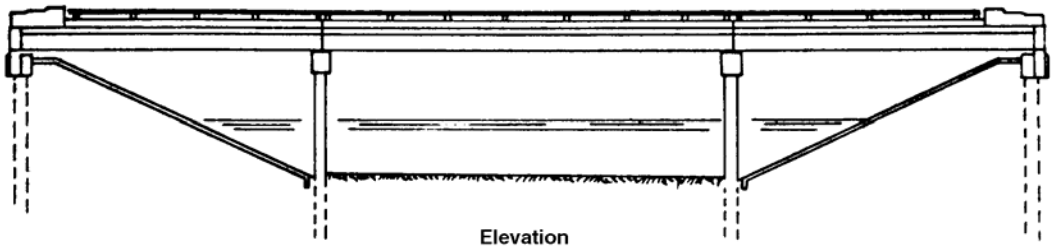

Elevation

Note: These are simple spans

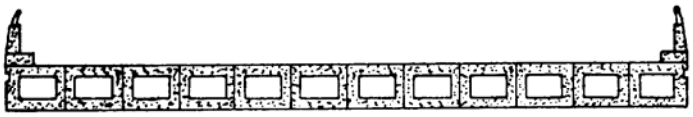

Cross Section

Precast Prestressed Concrete Deck Beams
(505)

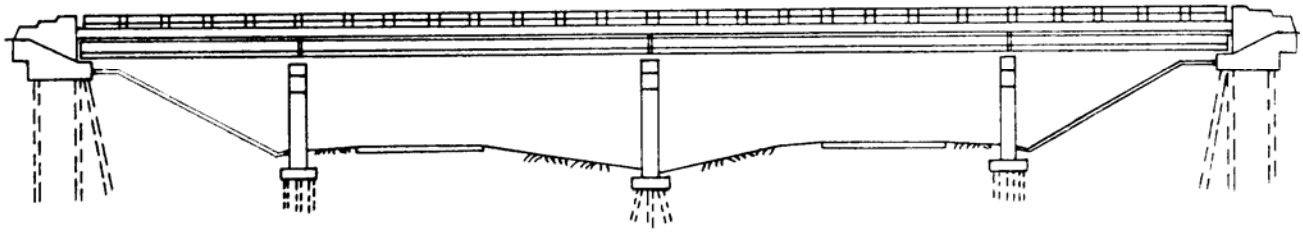

Elevation

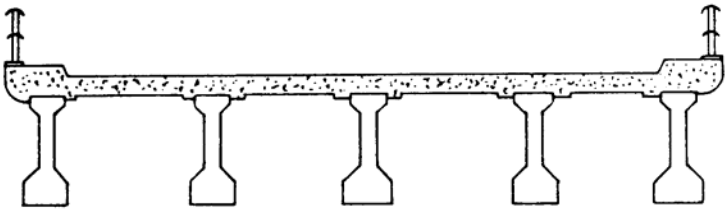

Cross Section

Precast Prestressed Concrete I-Beams
Simple Span (502)
Continuous Spans (602)

Figure 2.05

Hard Copies Uncontrolled

Concrete Bridge Types (Continued)

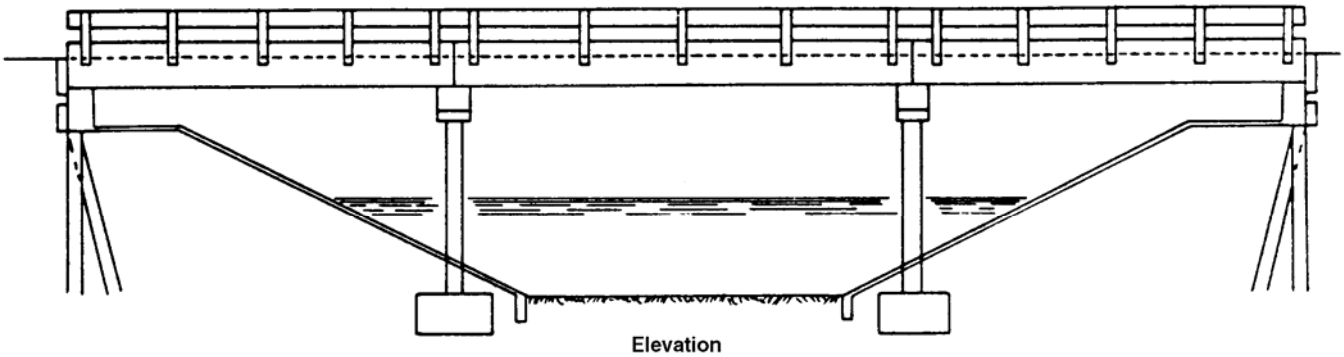

Elevation

Note: These are simple spans

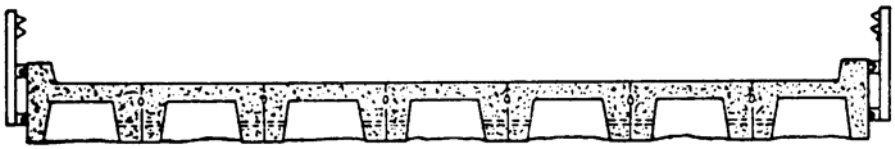

Cross Section

Precast (Non-Prestressed) Concrete Bridge Slab
(A29)

Figure 2.06

Hard Copies Uncontrolled

Steel Bridge Types

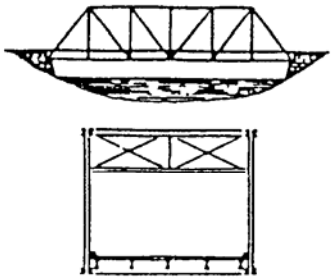

Pratt Through Truss
Eyebar - (350)
Riveted - (351)

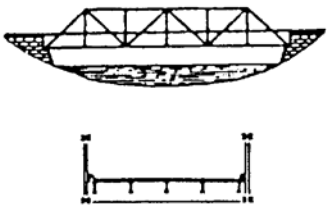

Warren Pony Truss
(335)

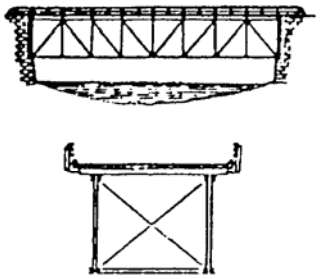

Pratt Deck Truss
Eyebar - (360)
Riveted - (361)

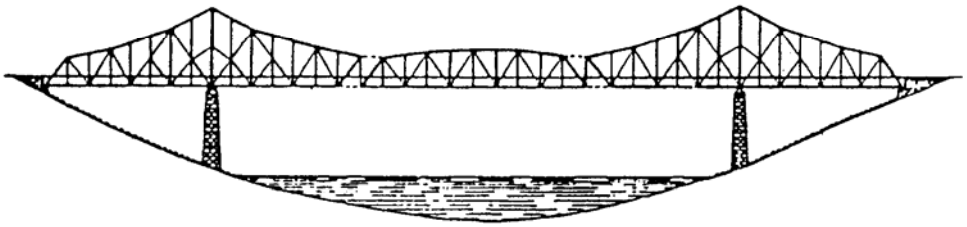

Through Cantilever Truss
(459)

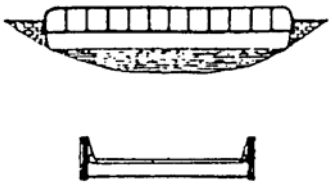

Simple Span
Through Girder
(324)

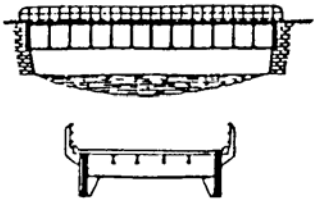

Simple Span
Deck Girder
(W/Floor Beam System)
(303)

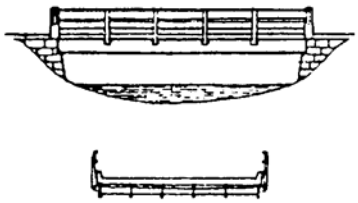

Simple Span
Multi-Beam
(No Floor Beam System)
(302)

Suspension
(313)

Figure 2.07

Hard Copies Uncontrolled

Steel Bridge Types (Continued)

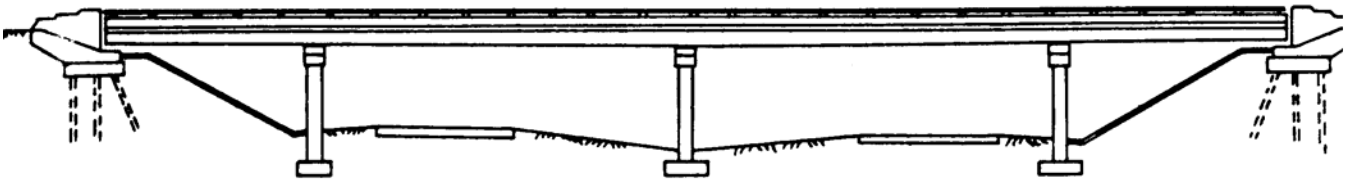

Elevation

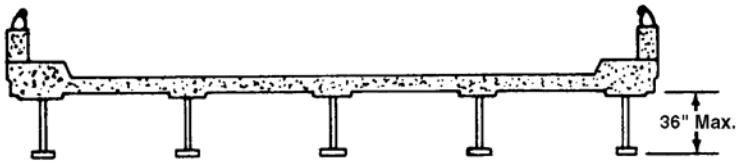

Cross Section

Continuous Steel Stringer
(402)

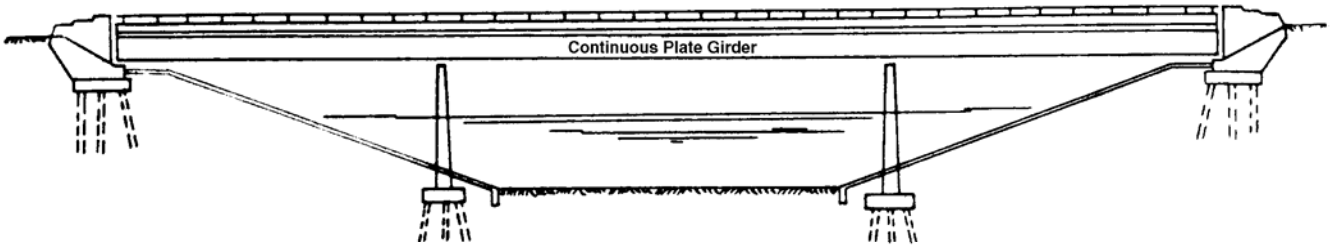

Elevation

Cross Section

Continuous Steel Plate Girder-(4 or more girders)
(402)

Figure 2.08

Hard Copies Uncontrolled

Steel Bridge Types (Continued)

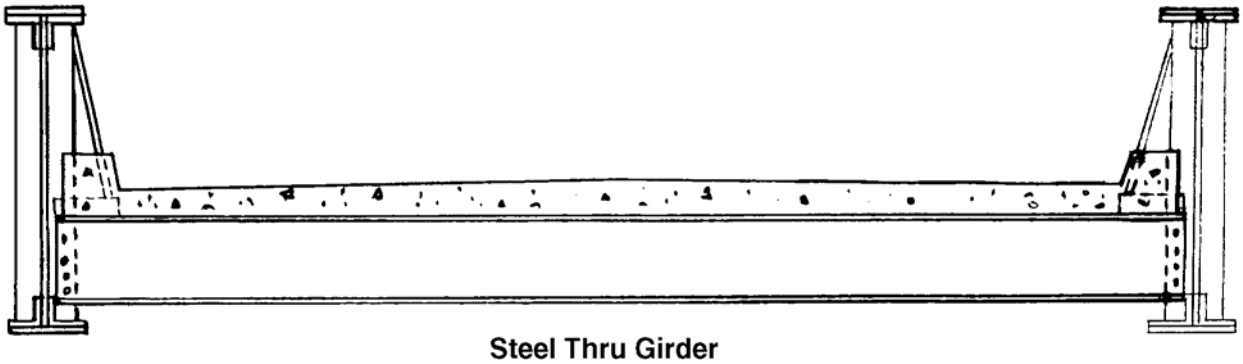

Steel Thru Girder
Simple Span (324)
Continuous Span (424)

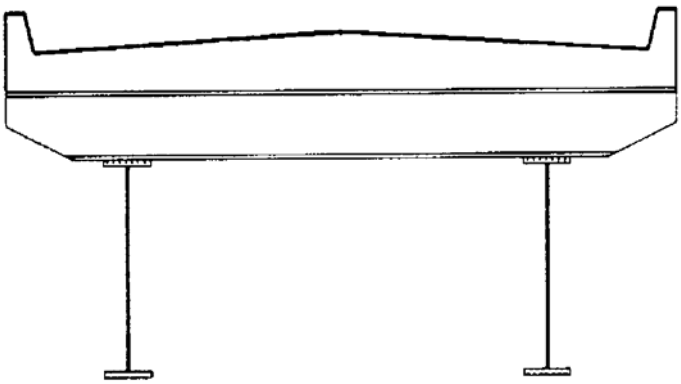

Steel Deck Girder
Simple Span (303)
Continuous Span (403)

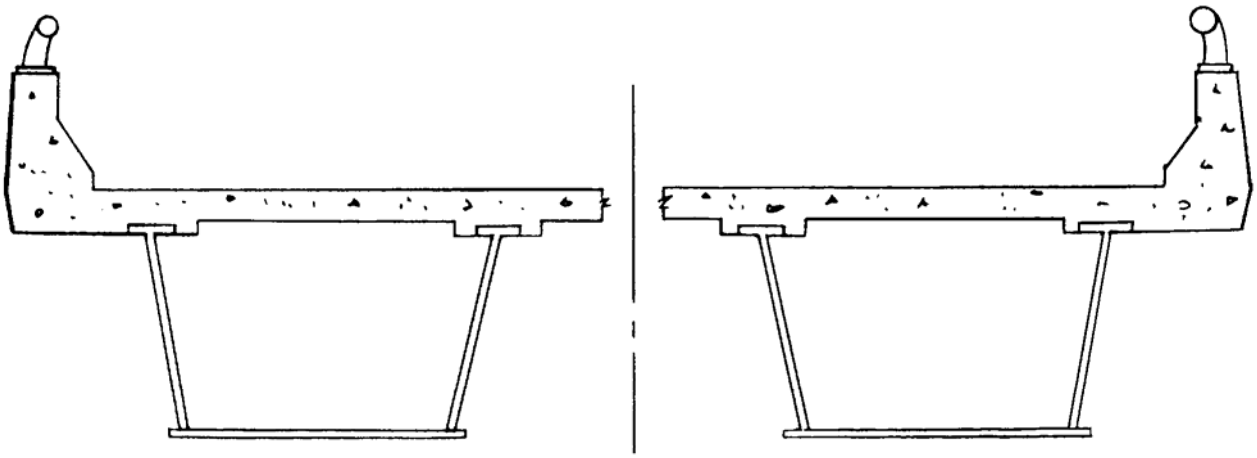

Steel Box Girder
Simple Span (305)
Continuous Span (405)

Figure 2.09

Hard Copies Uncontrolled

Steel Bridge Types (Continued)

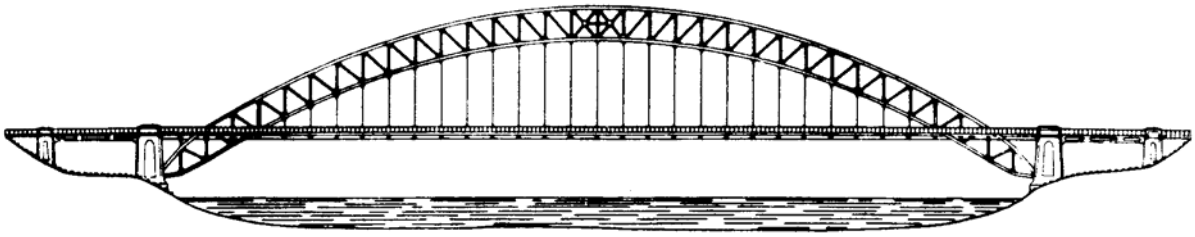

Through -Arch Truss
(312)

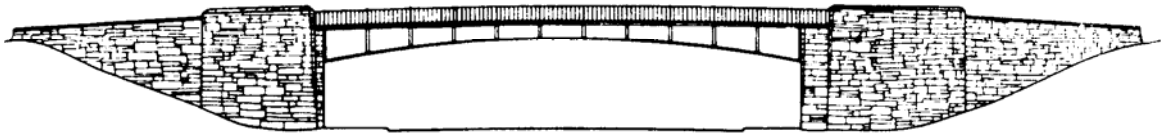

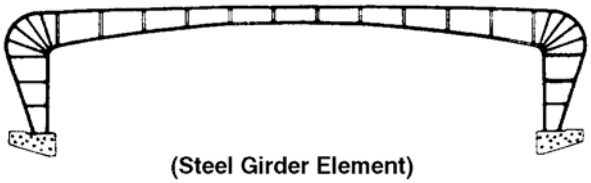

(Steel Girder Element)

Rigid Frame-Steel
(307)

Figure 2.10

Hard Copies Uncontrolled

Movable Bridge Types

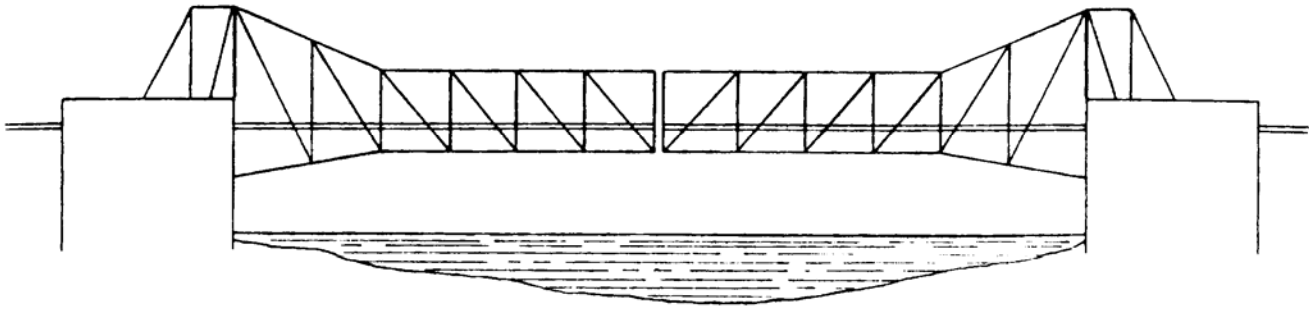

Bascule
(316)

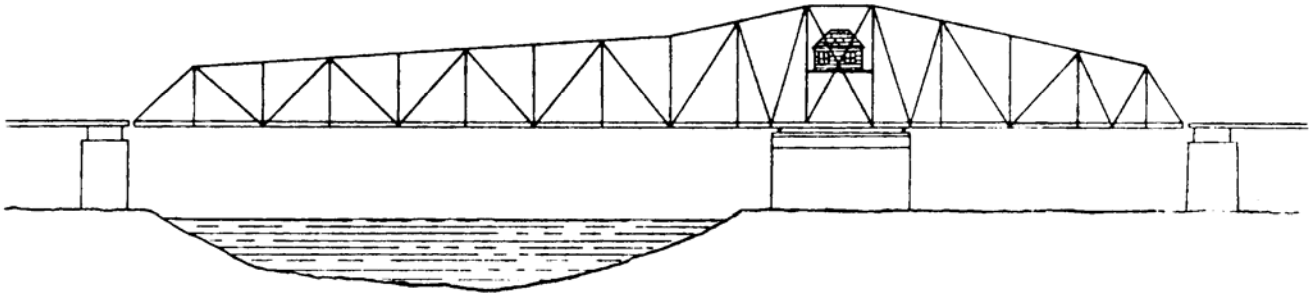

Rotary-Swing
(317)

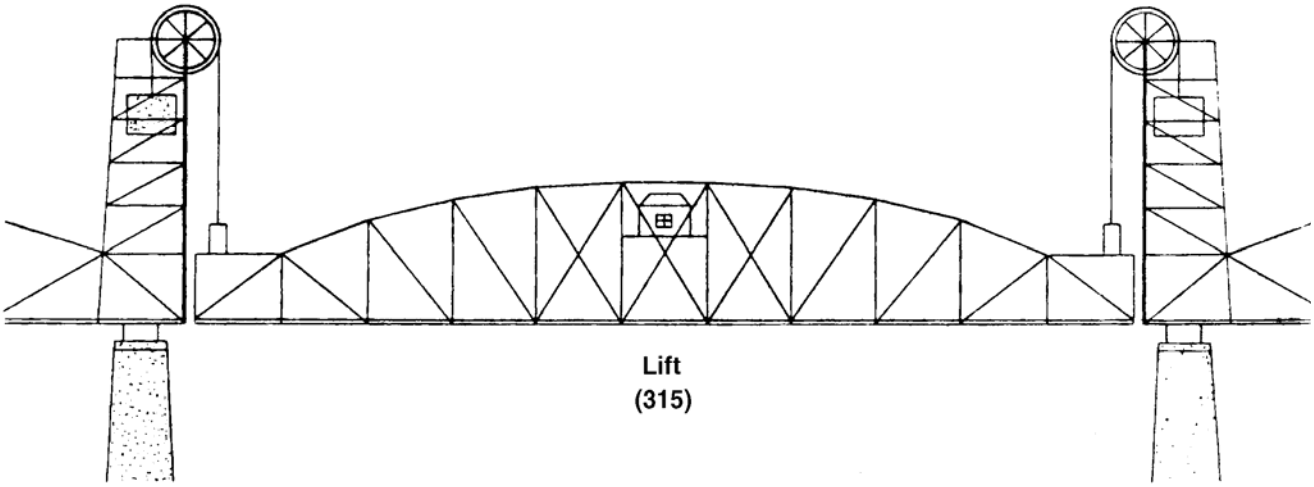

Lift
(315)

Figure 2.11

Hard Copies Uncontrolled

Culvert Types

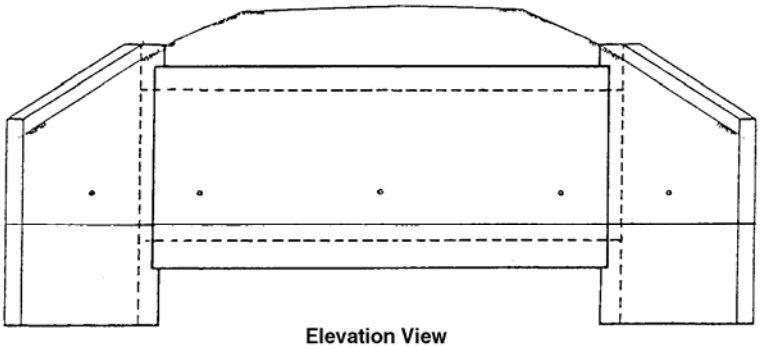

Elevation View

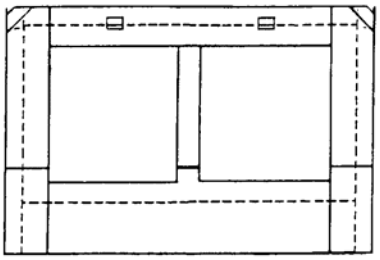

End View

Cast-In-Place Concrete Multiple Box Culvert (219)
Precast Concrete Box Culverts (A19)

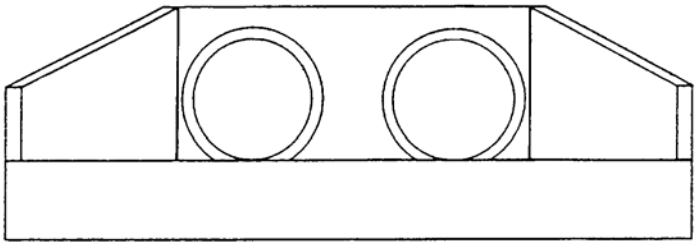

Precast Concrete Pipe Culverts (A19)
Metal Pipe Culverts
Steel (319)
Aluminum (919)

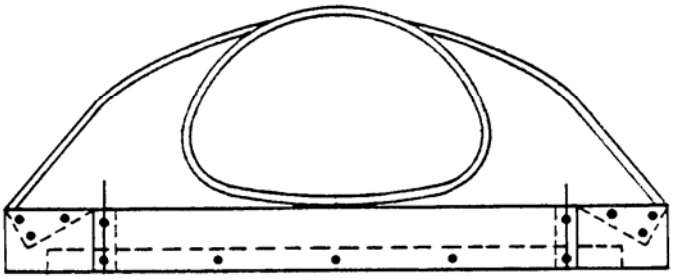

Corrugated Metal Plate Pipe Arch
Steel (319)
Aluminum (919)

Figure 2.12

Hard Copies Uncontrolled

TRUSS TYPES

THERE ARE 3 TRUSS CATEGORIES:

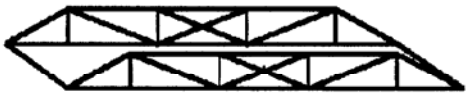

PONY TRUSS

STRUCTURE TYPE CODING 30 THRU 44

DECK ON FLOOR BEAMS SPANNING BETWEEN LOWER PANEL POINTS.
NO TOP LATERAL MEMBERS.
SHORT SPANS (<80')

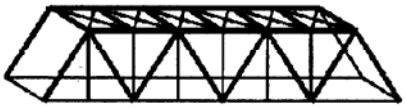

THROUGH TRUSS

STRUCTURE TYPE CODING 45 THRU 59

DECK ON FLOOR BEAMS BETWEEN LOWER PANEL POINTS.
TOP CHORDS BRACED BY LATERAL MEMBERS.
LONG SPANS (USUALLY>80')

DECK TRUSS

STRUCTURE TYPE CODING 60 THRU 69

DECK ON FLOOR BEAMS SPANNING BETWEEN UPPER PANEL POINTS. TRUSS IS MOSTLY BELOW THE DECK SURFACE.

PRATT

(330, 331, 350, 351)

DIAGONALS IN TENSION, VERTICALS IN COMPRESSION, (EXCEPT FOR HIP VERTICALS ADJACENT TO INCLINED END POSTS).
LENGTH: 25 - 150 FEET
8 - 45 METERS

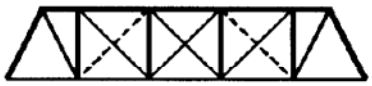

PRATT HALF-HIP

(332)

A PRATT WITH INCLINED END POSTS THAT DO NOT HORIZONTALLY EXTEND THE LENGTH OF A FULL PANEL. NO HIP VERTICAL.
LENGTH: 30 - 150 FEET
9 - 45 METERS

TRUSS LEG BEDSTEAD

(333, 334)

A PRATT WITH VERTICAL END POSTS.

LENGTH: 30 - 100 FEET
9 - 30 METERS

WARREN

(335)

TRIANGULAR IN OUTLINE THE DIAGONALS CARRY BOTH COMPRESSIVE AND TENSILE FORCES. A "TRUE" WARREN TRUSS HAS EQUILATERAL TRIANGLES WITH NO VERTICALS.
LENGTH: 50 - 400 FEET
15 - 120 METERS

MODIFIED WARREN

WITH VERTICALS

(336)

DIAGONALS CARRY BOTH COMPRESSIVE AND TENSILE FORCES. VERTICALS SERVE AS BRACING FOR TRIANGULAR WEB SYSTEM.
LENGTH: 50 - 400 FEET
15 - 120 METERS

Figure 2.13

Hard Copies Uncontrolled

TRUSS TYPES

DOUBLE INTERSECTION WARREN

(LATTICE)

(337)

WITH OR WITHOUT VERTICALS.

LENGTH: 75 - 400 FEET
23 - 120 METERS

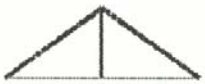

KING POST

(338,738)

LENGTH: 20 - 60 FEET
6 - 18 METERS

QUEEN POST

(338,738)

A LENGTHENED VERSION OF THE KING POST.

LENGTH: 20 - 80 FEET
6 - 24 METERS

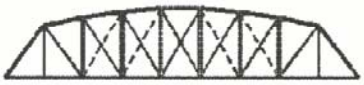

PARKER

(352,353)

A PRATT WITH A POLYGONAL TOP CHORD.

LENGTH: 40 - 200 FEET
12 - 60 METERS

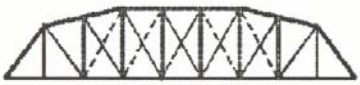

CAMELBACK

(354,355)

A PARKER WITH A POLYGONAL TOP CHORD OF EXACTLY FIVE SLOPES.

LENGTH: 100 - 300 FEET
30 - 90 METERS

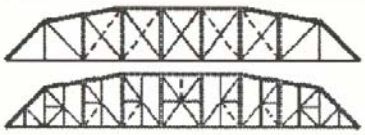

CAMELBACK

(354,355)

A PARKER WITH A POLYGONAL TOP CHORD OF EXACTLY FIVE SLOPES.

LENGTH: 100 - 300 FEET
30 - 90 METERS

DOUBLE INTERSECTION PRATT

(356)

(WHIPPLE, WHIPPLE-MURPHY, LINVILLE)
AN INCLINED END POST PRATT WITH DIAGONALS THAT EXTEND ACROSS TWO PANELS.

LENGTH: 70 - 300 FEET
21 - 90 METERS

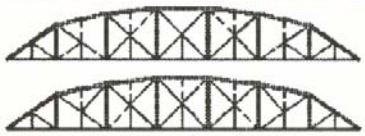

PENNSYLVANIA (PETIT)

(357)

A. A PARKER WITH SUB - STRUTS.
B. A PARKER WITH SUB - TIES.

LENGTH: 250 - 600 FEET
75 - 180 METERS

Figure 2.14

TRUSS TYPES

HOWE

(370)

1840 - 20TH CENTURY

(WOOD, VERTICALS OF METAL)
DIAGONALS IN COMPRESSION, VERTICALS IN TENSION.

LENGTH: 30 - 150 FEET
9 - 45 METERS

KELLOGG

(370)

LATE 19TH CENTURY

A VARIATION ON THE PRATT WITH ADDITIONAL DIAGONALS RUNNING FROM UPPER CHORD PANEL POINTS TO THE CENTER OF THE LOWER CHORDS.

LENGTH: 75 - 150 FEET
23 - 30 METERS

TOWN LATTICE

(370)

1820 - LATE 19TH CENTURY
(WOOD)

A SYSTEM OF CROSS-HATCHED WOODEN DIAGONALS WITH NO VERTICALS.

LENGTH: 50 - 220 FEET
15 - 66 METERS

FINK

(370)

1851 - LATE 19TH CENTURY (RARE)

VERTICALS IN COMPRESSION, DIAGONALS IN TENSION, LONGEST DIAGONALS RUN FROM END POSTS TO CENTER PANEL POINTS.

LENGTH: 75 - 100 FEET
23 - 45 METERS

BOLLMAN

(370)

1852 - MID-LATE 19TH CENTURY (RARE)

VERTICALS IN COMPRESSION, DIAGONALS IN TENSION. DIAGONALS RUN FROM END POSTS TO EVERY PANEL POINT.

LENGTH: 75 - 100 FEET
23 - 30 METERS

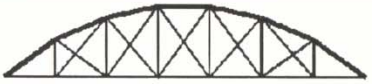

BOWSTRING ARCH-TRUSS

(370)

1840 - LATE 19TH CENTURY

A TIED ARCH WITH THE DIAGONALS SERVING AS BRACING AND THE VERTICALS SUPPORTING THE DECK.

LENGTH: 70 - 175 FEET
21 - 50 METERS

BURR ARCH TRUSS

(370)

1804 - LATE 19TH CENTURY (WOOD)

COMBINATION OF A WOODEN ARCH WITH A MULTIPLE KING POST. (ARCH ALSO COMBINED WITH LATER WOODEN TRUSSES).

LENGTH: 50 - 175 FEET
15 - 50 METERS

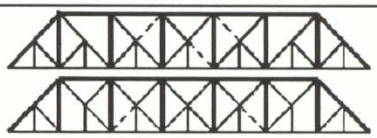

BALTIMORE (PETIT)

(370)

1871 - EARLY 20TH CENTURY

A. A PRATT WITH SUB - STRUTS.
B. A PRATT WITH SUB - TIES.

LENGTH: 250 - 600 FEET
75 - 180 METERS

Figure 2.15

Length Measurements

Single Span Structures

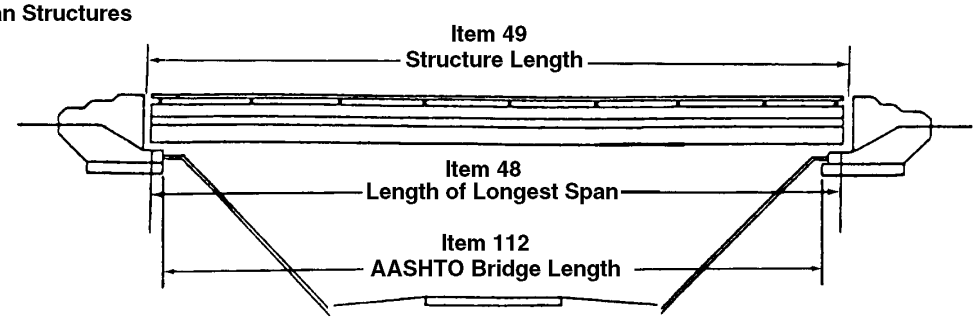

Multiple Span Structures

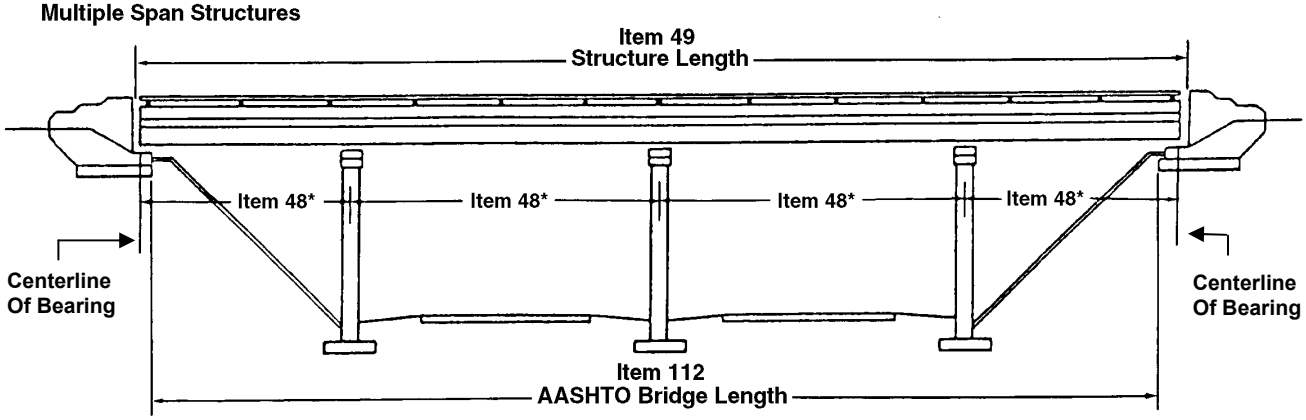

*- Record Length of Longest Span Item 48

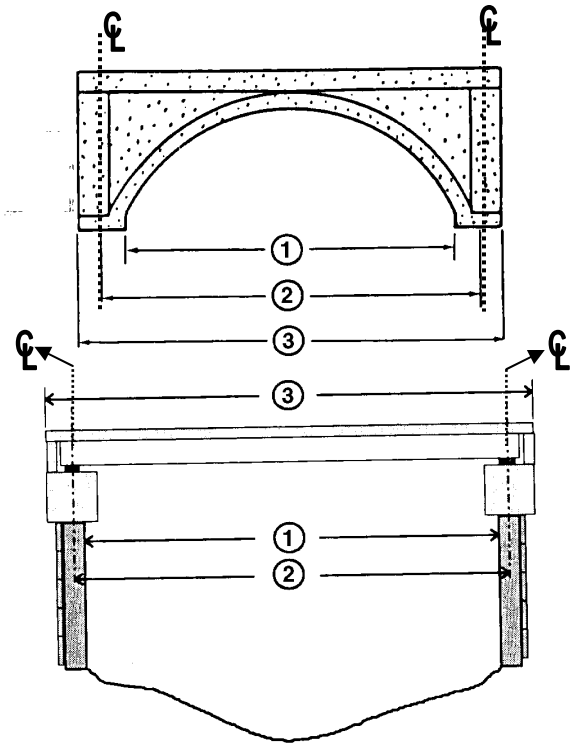

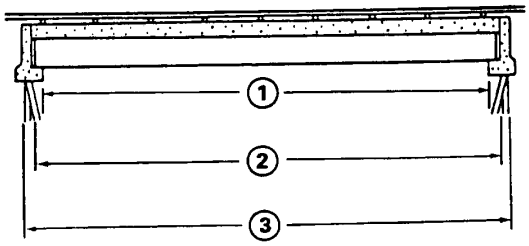

1 – Item 112 (AASHTO Bridge Length)

2 – Item 48 (Length of Longest Span)

3 – Item 49 (Structure Length)

Figure 3.1

Hard Copies Uncontrolled

Width Measurements

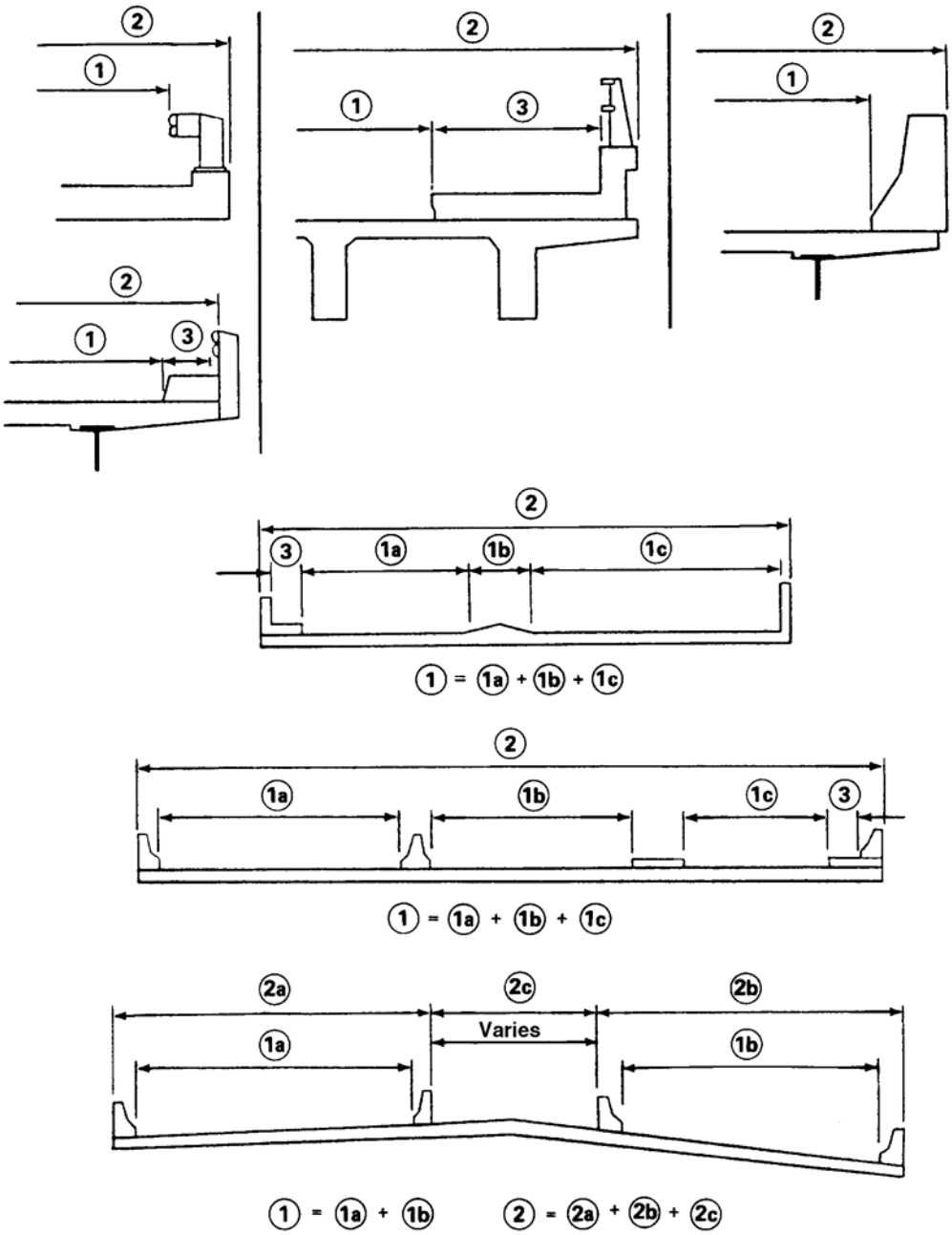

1 Item 51 - Bridge Roadway Width, Curb to Curb

2 Item 52 - Deck Width, Out to Out

3 Item 50 - Curb or Sidwalk Width

Figure 4.1

Hard Copies Uncontrolled

Culvert Examples

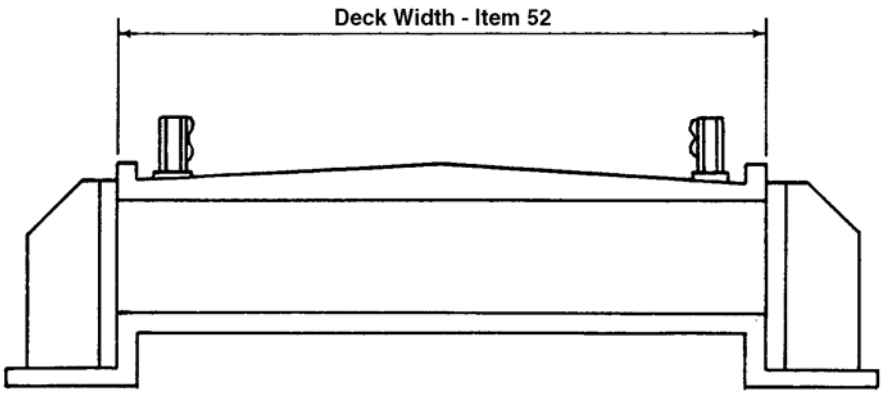

Culvert Not Under Fill

Note: Fill Depth (Item 62E) Code 00.0

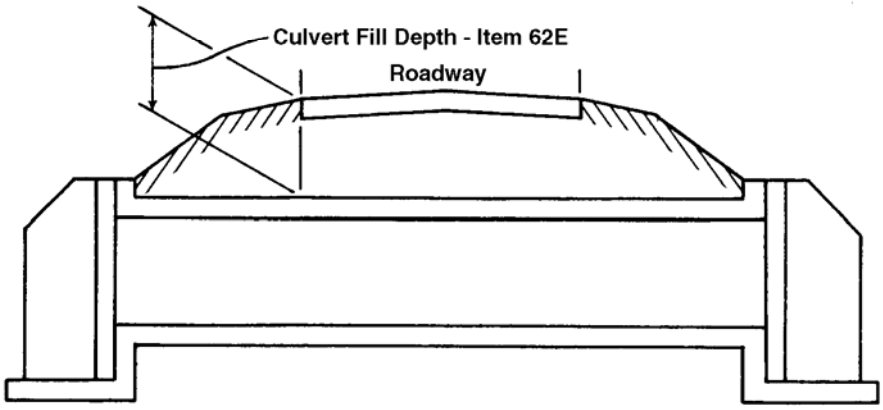

Culvert Under Fill

Note: Deck Width (Item 52) Code 000.0

Figure 4.2

Hard Copies Uncontrolled

Horizontal Clearance

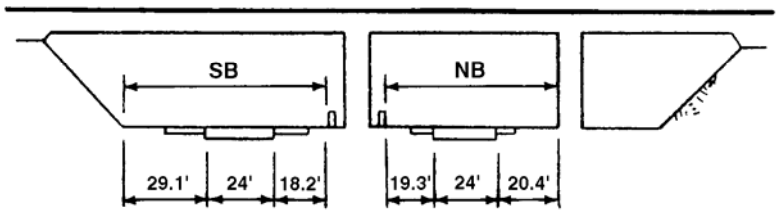

SB = 71.3' NB = 63.7'

Two Roadways Under
Item 47A = 0713
Item 47B = 0637
Item 47 = 0713 (Maximum Single Roadway Width)

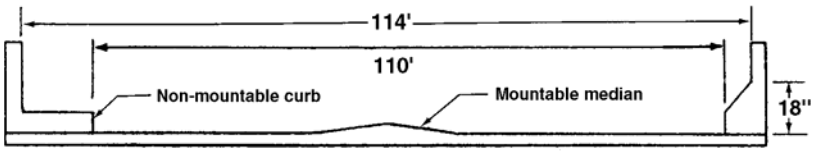

One Roadway On
Item 47A = 1140
Item 47B = Leave Blank
Item 47 = 1100 (Maximum Single Roadway Width)

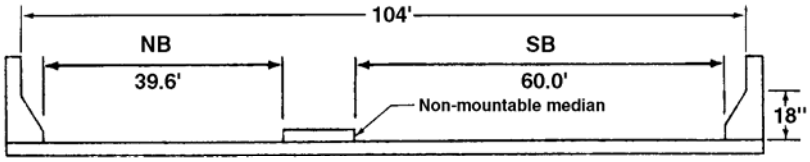

Two Roadways On
Item 47A = 1040
Item 47B = Leave Blank
Item 47 = 0600 (Maximum Single Roadway Width)

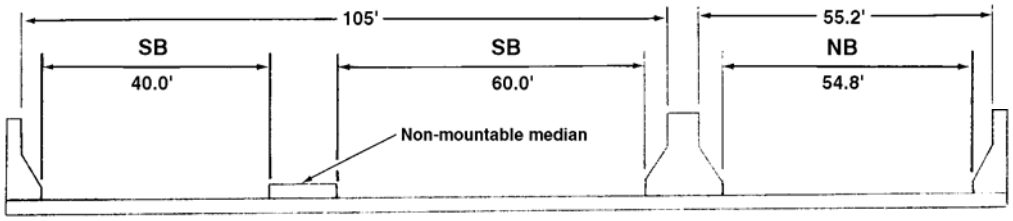

More Than Two Roadways On
Item 47A = 1050
Item 47B = 0552
Item 47 = 0600 (Maximum Single Roadway Width)

Figure 4.3

Hard Copies Uncontrolled

Minimum Vertical Clearance

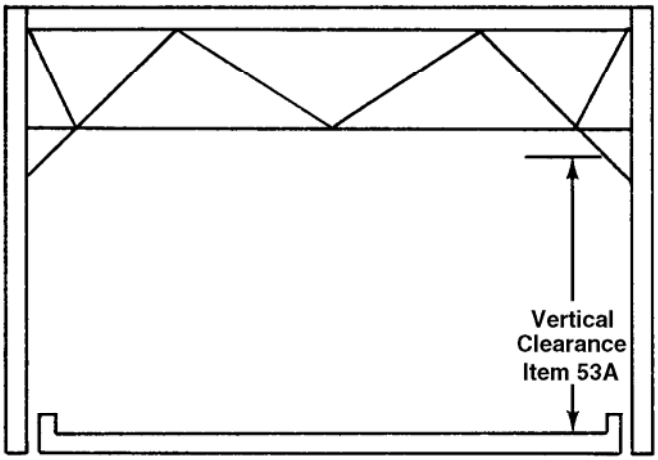

One Opening

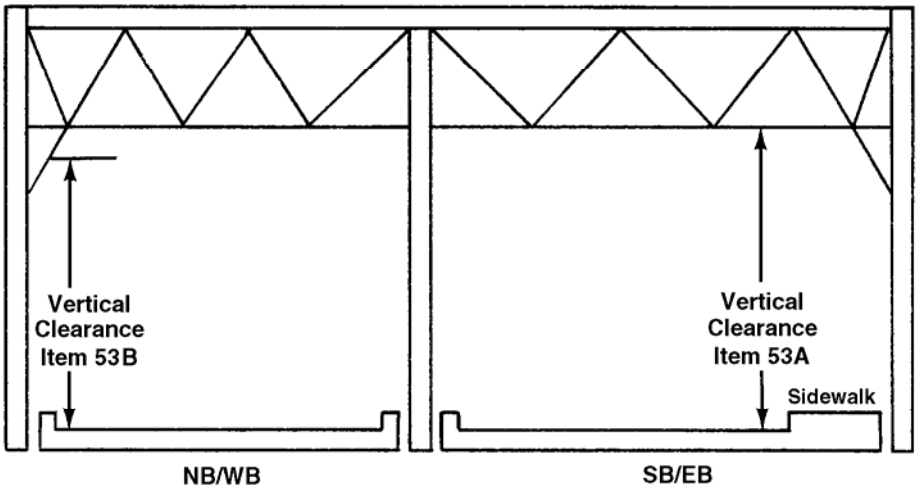

Two Openings

Figure 5.1

Hard Copies Uncontrolled

Minimum Vertical Underclearance

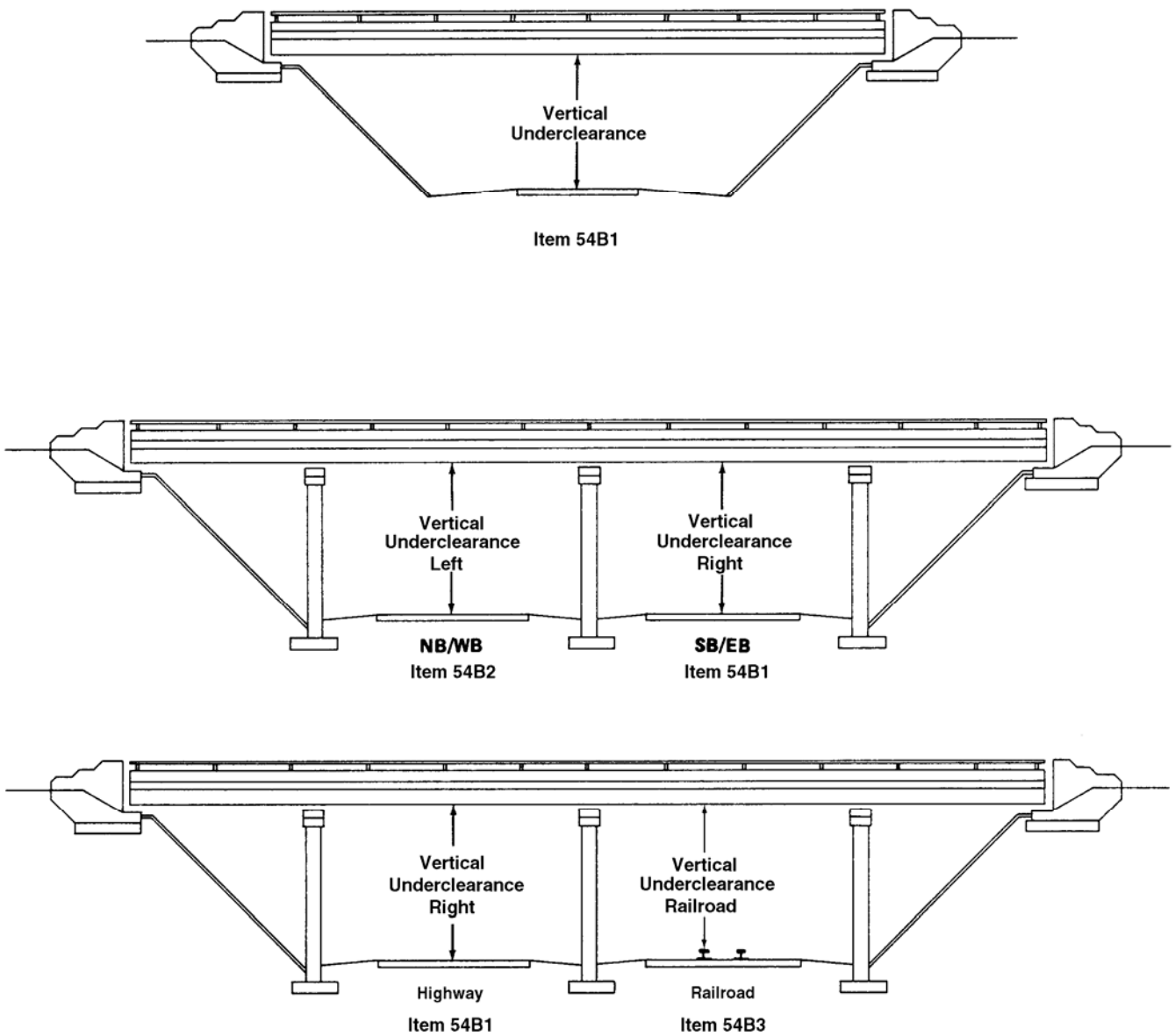

Figure 6.1

Hard Copies Uncontrolled

10 Foot Vertical Clearance

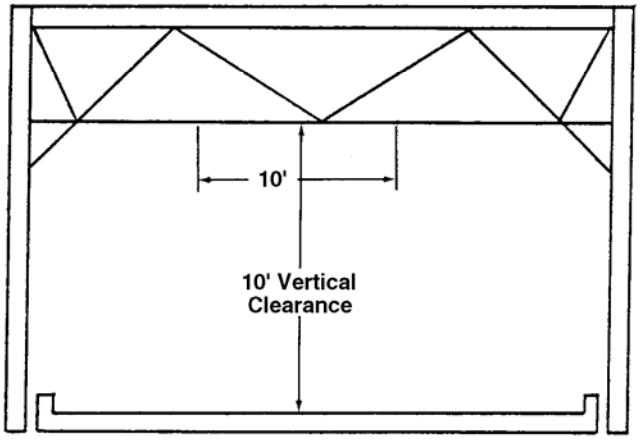

One Opening

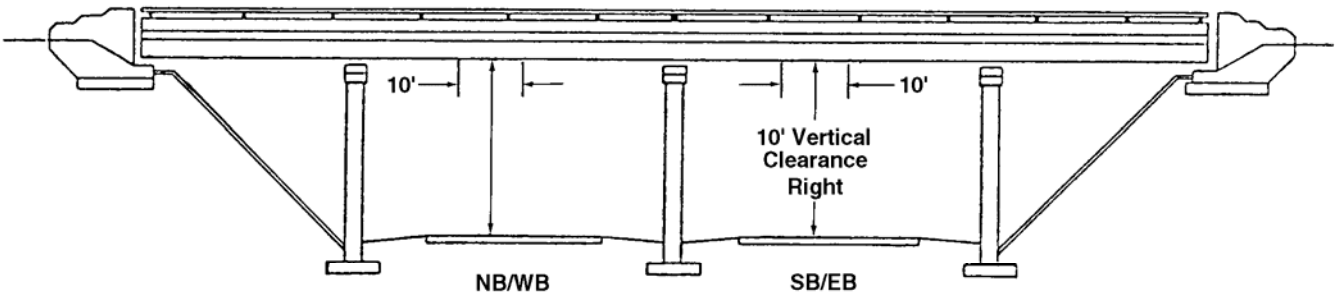

NB/WB
Item 10B

SB/EB
Item 10A

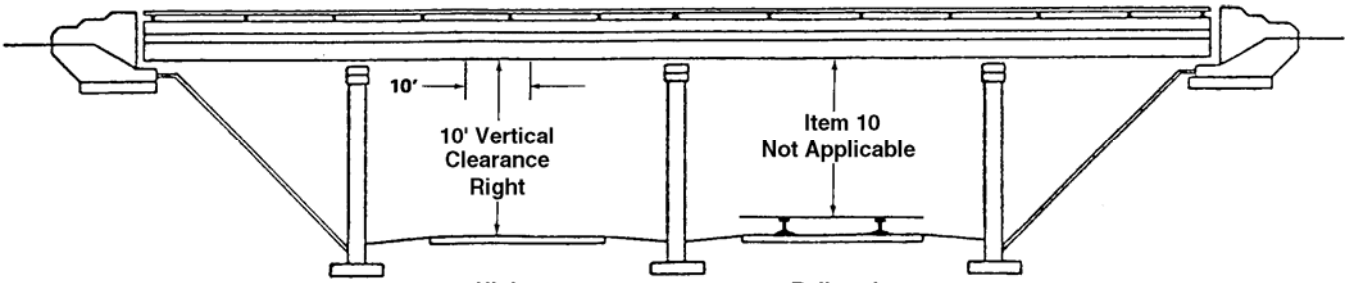

Highway
Item 10A

Railroad

Figure 7.1

Hard Copies Uncontrolled

Sidewalk Width On Structure

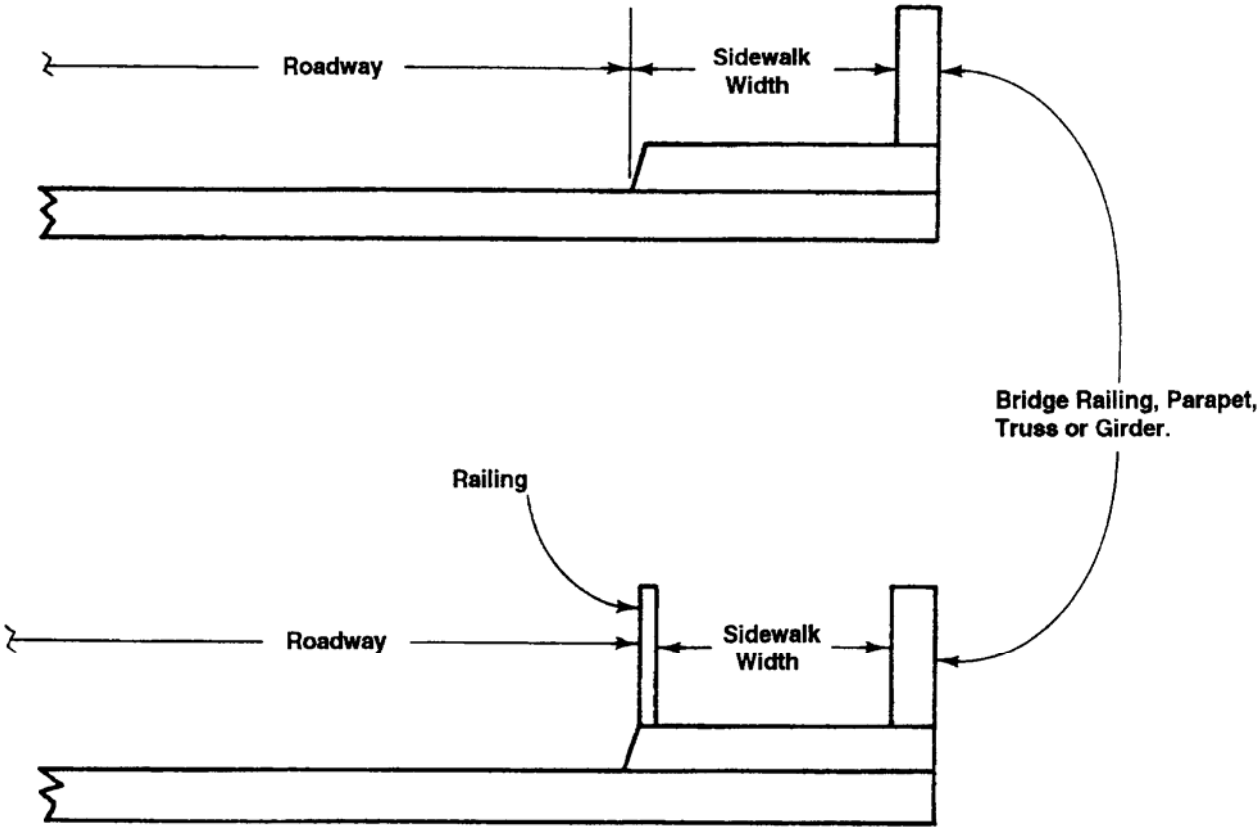

Figure 8.1

Hard Copies Uncontrolled

Minimum Lateral Underclearance

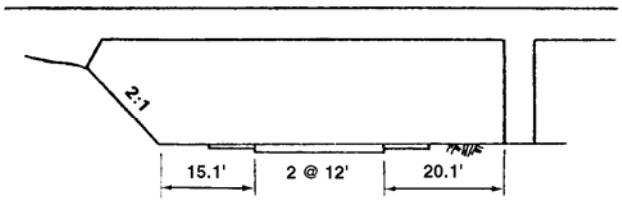

I55B = 15.1 I56 (Leave Blank) For 2-Way Traffic
I56 = 15.1 For 1-Way Traffic
I55BI = Leave Blank

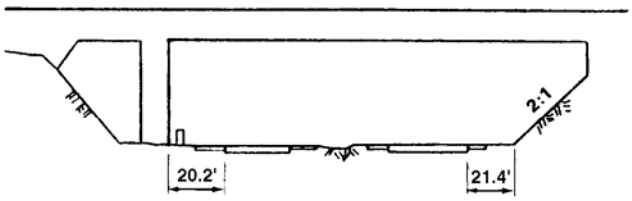

I55B = 20.2
I56 = 999
I55BI = Leave Blank

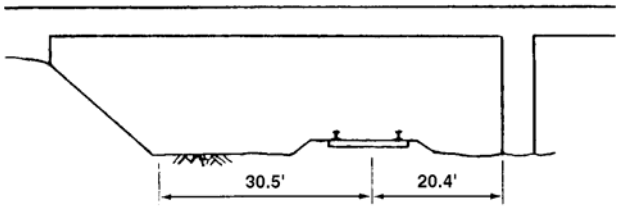

I55BI = 20.4

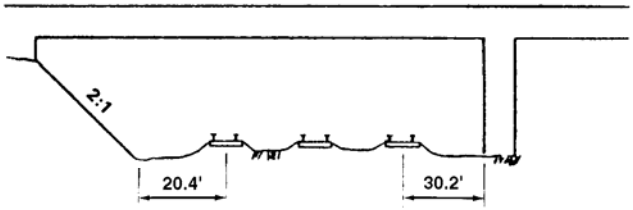

I55B & I56 = Leave Blank
I55BI = 20.4

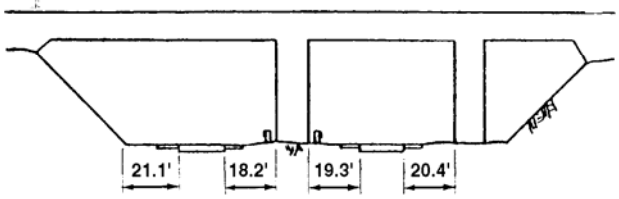

I55B = 20.4
I56 = 18.2
I55BI = Leave Blank

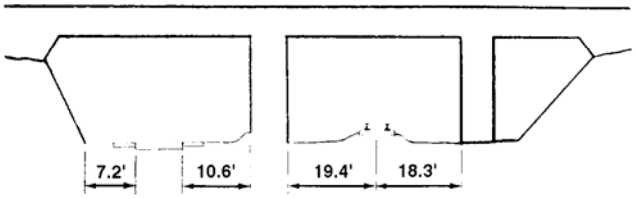

I55B = 07.2
I55BI = 18.3
I56 = Leave Blank

Figure 9.1

Hard Copies Uncontrolled

Increased Length of Replaced Bridges

Replaced Bridge Length = Existing Bridge Length x Length Expansion Factor

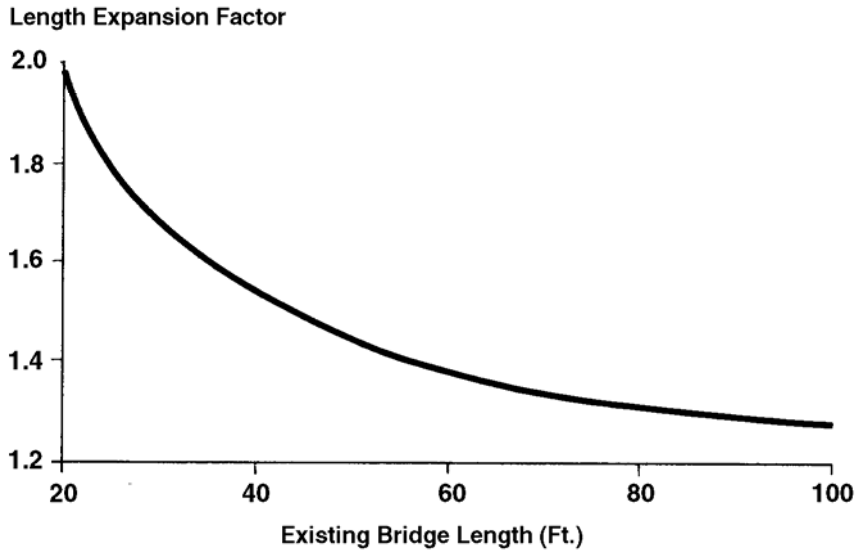

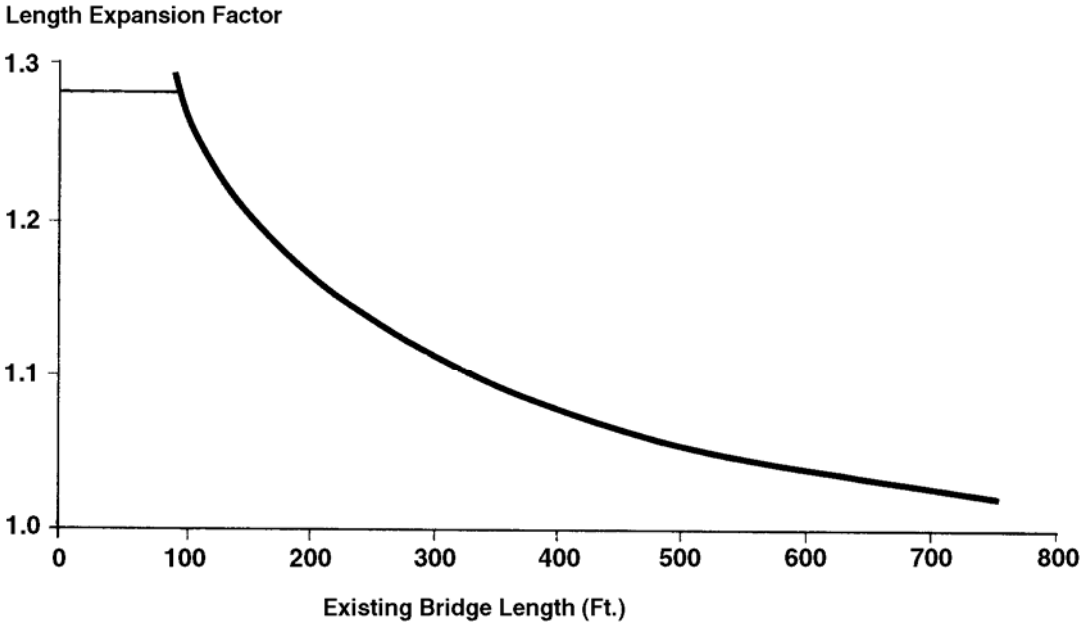

Figure 10.1

Hard Copies Uncontrolled