Summary of Pre-Phase I SRA Recommendations

The IL 176 SRA Corridor is illustrated in **Figure S.1** by segment. **Figures S.2** and **S.3** present the roadway recommendations and **Table S.1** summarizes these recommendations. The conceptual SRA cross sections applied for scoping purposes along this corridor were the Urban SRA cross section from IL 23 (State Street) to Deerpass Road, Rural SRA cross section from Deerpass Road to Mt. Thabor Road, and the Suburban SRA cross section from Mt. Thabor Road to US 12 (Rand Road).

The Pre-Phase I recommendations included in this report are meant to coordinate current and future planning, indicate right-of-way acquisition needs, and guide any future Phase I process. The recommendations reflect the applicability of SRA cross section concepts along IL 176, as determined through the scoping process. Pre-Phase I recommendations do not utilize the same rigor as a Phase I analysis. Prior to final design and implementation, the recommendations contained in this report will require future engineering study, including topographical and drainage surveys.

Figure S.1 The Eight Corridor Segments

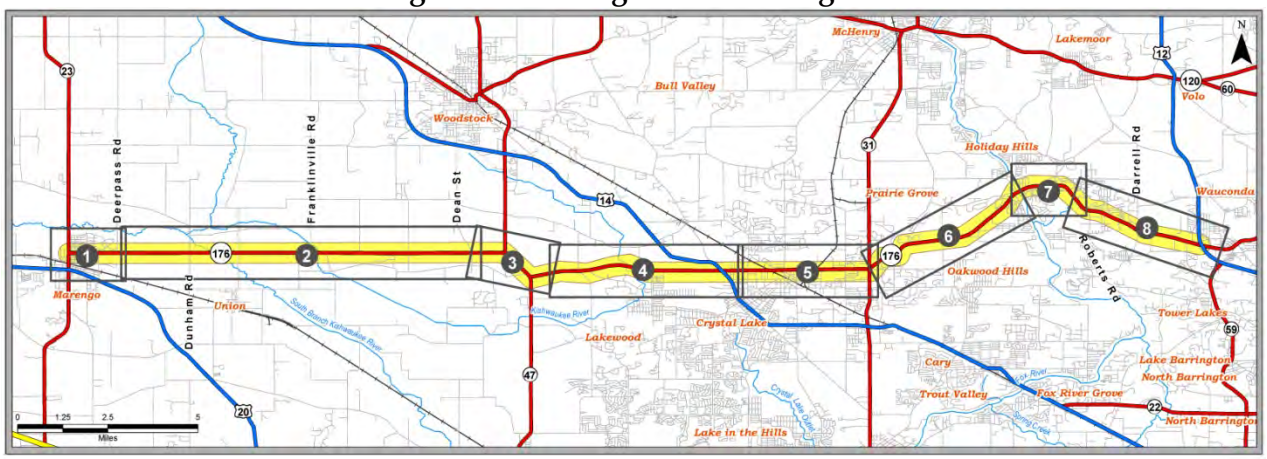

Note: The corridor was divided into segments based on changes in projected traffic volumes as well as changes in land use.

Segment 1 – IL 23 (State Street) to Deerpass Road
Segment 2 – Deerpass Road to Dean Street
Segment 3 – Dean Street to Mt. Thabor Road
Segment 4 – Mt. Thabor Road to Oak Street
Segment 5 – Oak Street to IL 31
Segment 6 – IL 31 to Nish Road
Segment 7 – Nish Road to Roberts Road
Segment 8 – Roberts Road to US 12 (Rand Road)

Figure S.2 Recommended Cross Sections

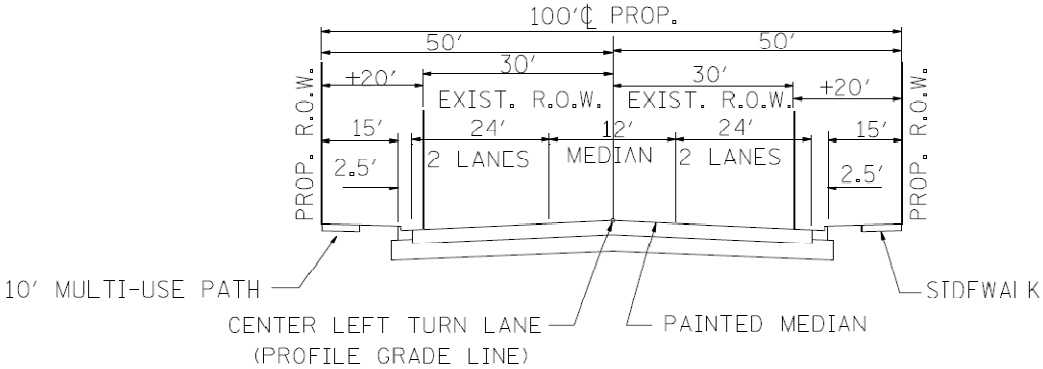

Roadway Section A-A
IL 23 (State Street) to Deerpass Road

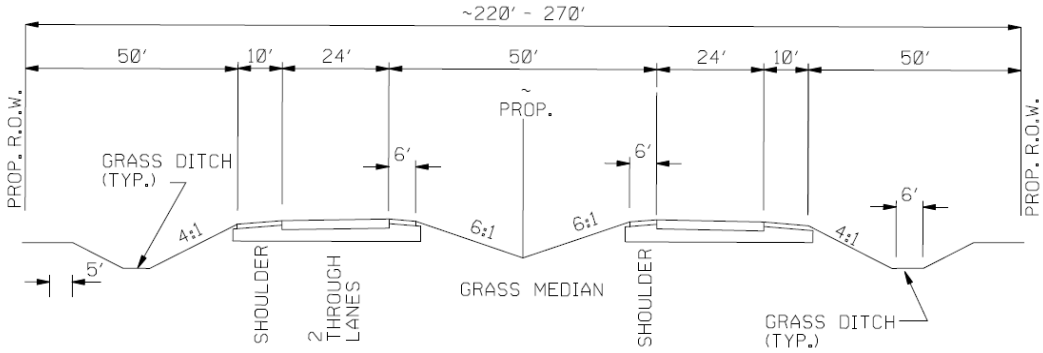

Roadway Section B-B
Deerpass Road to IL 47;
IL 47 to Mt. Thabor Road

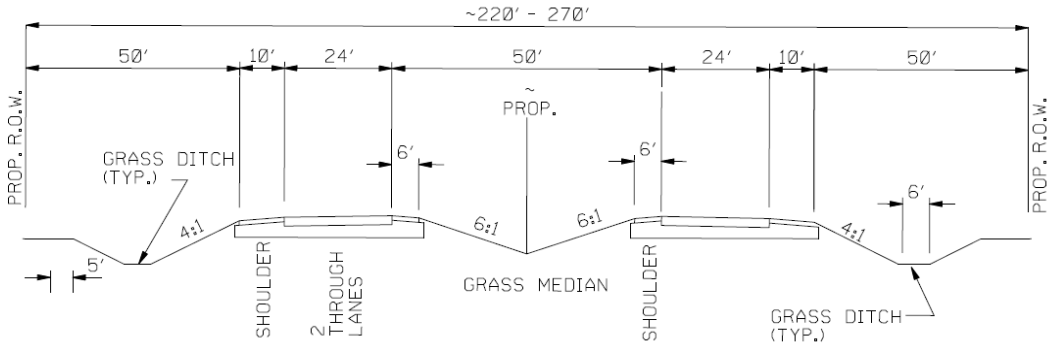

Roadway Section B1-B1
Between the Intersections of IL 47

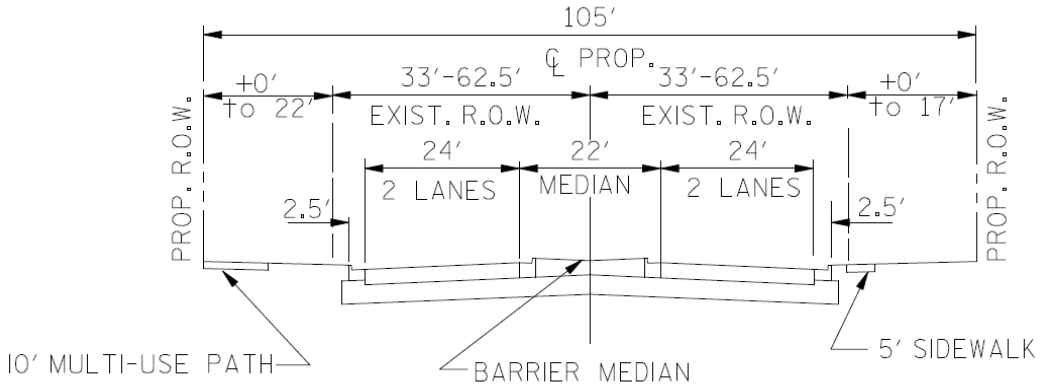

Roadway Section C-C
Mt. Thabor Road to US 14;
Lincoln Parkway to Walkup Road

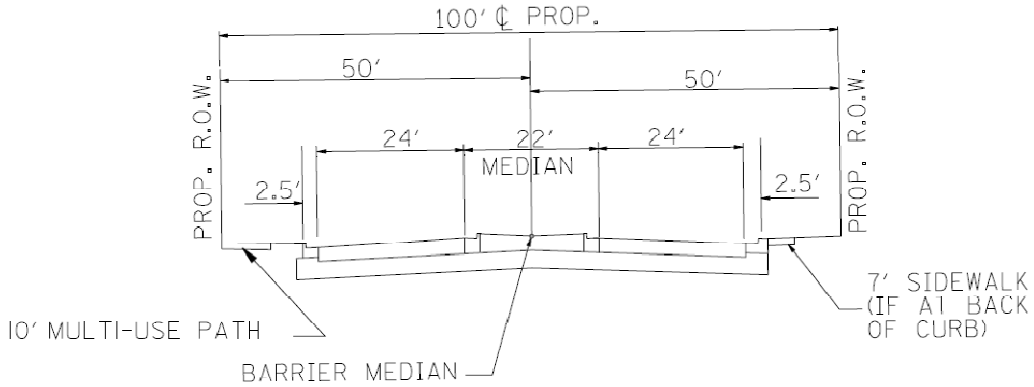

Roadway Section D-D
US 14 to 141′ East of Oak Street;
Mistwood Lane to IL 31

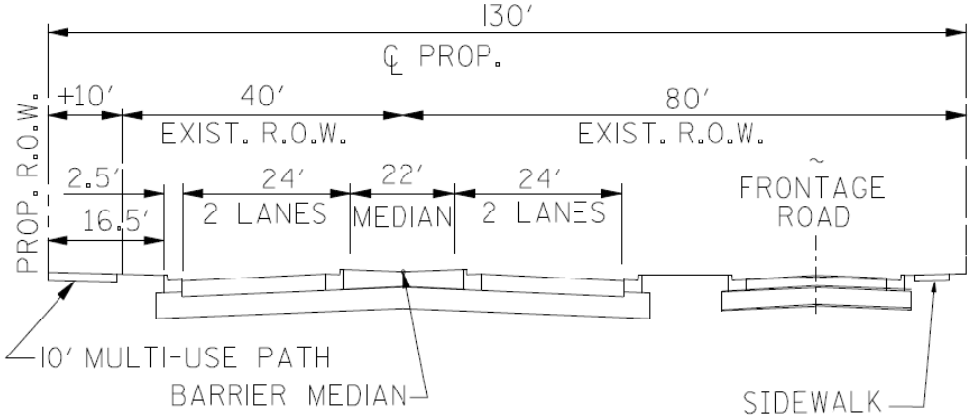

Roadway Section E-E
141′ East of Oak Street to Lincoln Parkway

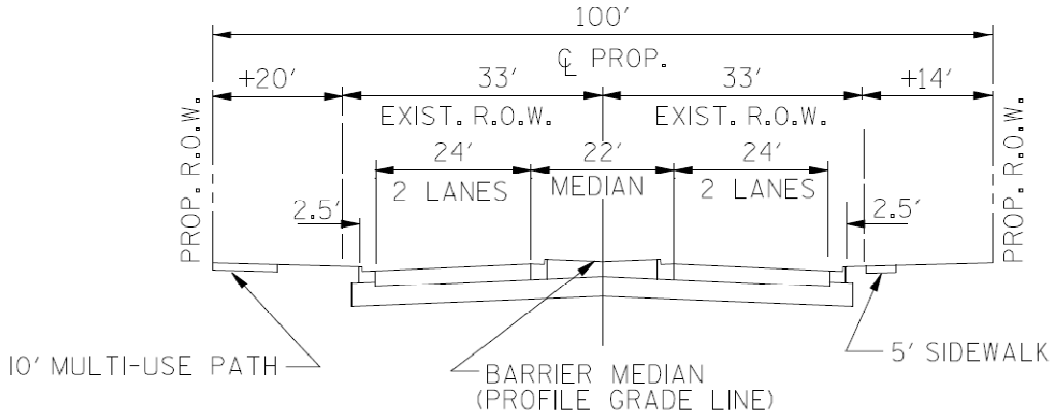

Roadway Section F-F
Walkup Road to Union Pacific Railroad

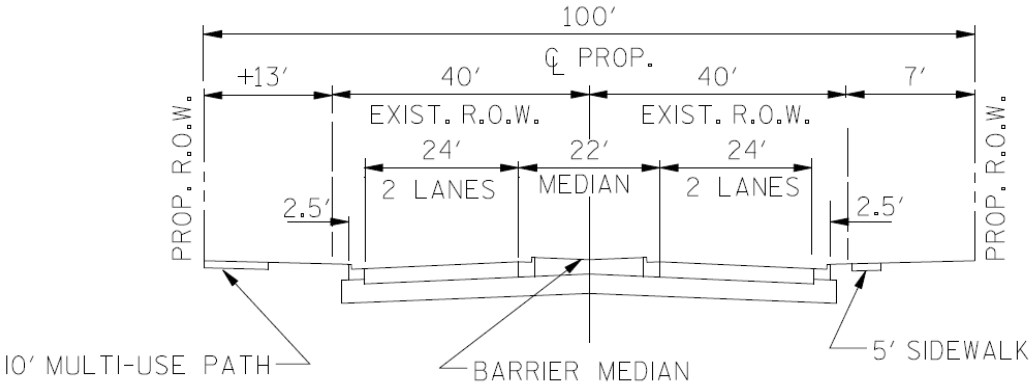

Roadway Section G-G
Union Pacific Railroad to Mistwood Lane;
IL 31 to US 12 (Rand Road)

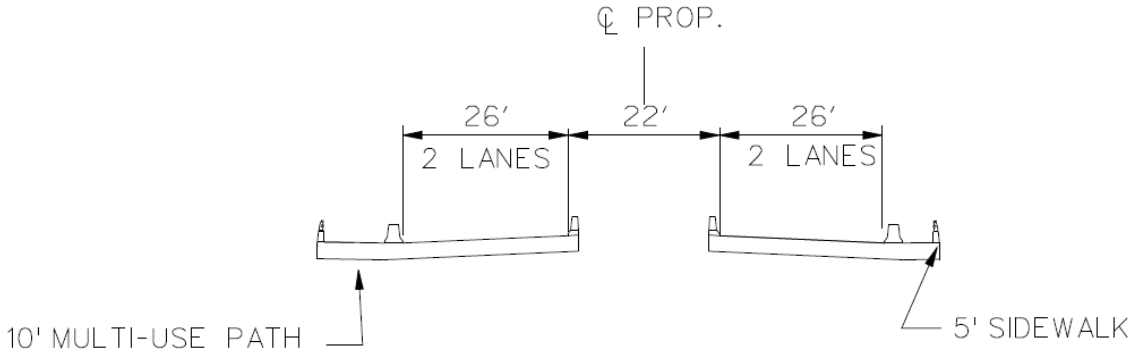

Standard Bridge Cross-Section A1-A1

Table S.1 Summary of Recommendations

Segment Number	SRA 176 Segment 1 (0.99 Miles) IL 23 to Deerpass Rd.	SRA 176 Segment 2 (7.35 Miles) Deerpass Rd. to Dean St.	SRA 176 Segment 3 (2.61 Miles) Dean St. to Mt. Thabor Rd.	SRA 176 Segment 4 (3.59 Miles) Mt. Thabor Rd. to Oak St.	SRA 176 Segment 5 (3.02 Miles) Oak St. to IL 31	SRA 176 Segment 6 (3.78 Miles) IL 31 to Nish Rd.	SRA 176 Segment 7 (2.02 Miles) Nish Rd. to Roberts Rd.	SRA 176 Segment 8 (2.58 Miles) Roberts Rd. to US 12
Roadway Section(s)	A-A	B-B	B-B and B1-B1	C-C and D-D	C-C, E-E, F-F, G-G, and D-D	G-G	G-G	G-G
(Existing ROW + Needed ROW) = Recommended	(60-80 ft. + 20-40 ft.) = 100 ft.	(60-80 ft. + 140-160 ft.) = 220 ft. + 180 ft. at intersections = 270 ft.	(80-150 ft. +70-140 ft.) = 220 ft.	(100 ft. + 20 ft.) = 120 ft.	(66-80 ft. + 20-40 ft.) = 120 ft.	(80 ft. + 40 ft.) = 120 ft.	(80-100 ft. + 20-40 ft.) = 120 ft.	(80-90 ft. + 40-50 ft.) = 120 ft.
Level of Service	A	A	A	A or B	B	B	C	C
Number of Lanes - Width of Lanes	2 – 12 ft. inner lanes 2 – 12 ft. outer lanes 1 – 12 ft. center two-way left turn lane	4 – 12 ft. lanes	4 – 12 ft. lanes (IL 176)	4– 12 ft. lanes	4 – 12 ft. lanes	2 – 12 ft. inner lanes 2 – 12 ft. outer lanes	2 – 12 ft. inner lanes 2 – 12 ft. outer lanes	2 – 12 ft. inner lanes 2 – 12 ft. outer lanes
Median Width - Type	12 ft. painted center left turn lane	50 ft. depressed grass	50 ft. depressed grass	22 ft. typical barrier median	22 ft. typical barrier median	22 ft. typical barrier median	22 ft. typical barrier median	22 ft. typical barrier median
Shoulders	5 ft. sidewalk 2½ ft. curb and gutter	10 ft. outer 6 ft. inside	10 ft. outer 6 ft. inside	5 ft. sidewalk 2½ ft. curb and gutter	5 ft. sidewalk 2½ ft. curb and gutter	5 ft. sidewalk 2½ ft. curb and gutter	5 ft. sidewalk 2½ ft. curb and gutter	5 ft. sidewalk 2½ ft. curb and gutter
Existing Signalized Intersections + (Recommended Signalized Intersections)	1 + (1) IL 23 + (Prospect St.)	0 + (6) (Deerpass Rd., Millstream Rd., N. Union Rd., Franklinville Rd., Gee Rd., Sunnyside Rd.)	2 + (1) IL 47/IL 176 north, IL 47/IL 176 south + (Dean St)	1+ (2) US 14 + (Haligus Rd. and Briarwood Rd.)	3 + (3) Oak St., Walkup Rd., Terra Cotta Rd. + (Main St. + Mistwood Ln., Erick St.)	2 + (4) IL 31 and Valley View Rd. (Smith Rd., Barreville Rd., Buhl Rd., and Sherman Blvd.)	2 + (3) - 1 River Rd. and Newport Ct. + (Nish Rd./Fox St.., Hale Ln., and Cherry Ave.) - Newport Ct.	8 Roberts Rd., Eastway Dr., Westridge Dr., Darrell Rd., Larkdale Row., Commercial Dr., US 12 SB & NB Ramps
Parking	No Parking	No Parking	No Parking	No Parking	No Parking	No Parking	No Parking	No Parking
Curb Cut Access	Two-Way Center Left Turning Lane	Right-in/Right-out, Consolidated Access Points	Right-in/Right-out, Consolidated Access Points	Right-in/Right-out, Consolidated Access Points	Right-in/Right-out, Consolidated Access Points	Right-in/Right-out, Consolidated Access Points	Right-in/Right-out, Consolidated Access Points	Right-in/Right-out, Consolidated Access Points
Transit	Bus turn-outs, signs and shelters, Transit Signal Prioritization	Bus turn-outs, signs and shelters, Transit Signal Prioritization	Bus turn-outs, signs and shelters, Transit Signal Prioritization, Park-and-Ride Lot at IL 47	Bus turn-outs, signs and shelters, Transit Signal Prioritization	Bus turn-outs, signs and shelters, Transit Signal Prioritization, Park-and-Ride Lot at US 14	Bus turn-outs, signs and shelters, Transit Signal Prioritization, Park-and-Ride Lot at IL 31	Bus turn-outs, signs and shelters, Transit Signal Prioritization	Bus turn-outs, signs and shelters, Transit Signal Prioritization, Park-and-Ride Lot at US 12 (Rand Road)
Pedestrian/Bicycle Facility	5 ft. sidewalk 10 ft. multi-purpose path	10 ft. outer shoulders	10 ft. outer shoulders	5 ft. sidewalk 10 ft. multi-purpose path	5 ft. sidewalks 10 ft. multi-purpose path	5 ft. sidewalk 10 ft. multi-purpose path	5 ft. sidewalk 10 ft. multi-purpose path	5 ft. sidewalks 10 ft. multi-purpose path
Loading	Off-Street	Off-Street	Off-Street	Off-Street	Off-Street	Off-Street	Off-Street	Off-Street
Miscellaneous		• New/widen culvert 400 ft. east of Deerpass Rd. • Two bridges over the Kishwaukee River to be widened, paired, or replaced. • Realignment of McCue Rd. and Dean St. intersections.	•New/widen culvert east of Swanson Rd. on IL 47. •Realignment of Swanson Rd and Pleasant Valley Rd. intersections. •Alignment shifts south of Mt. Thabor Cemetery.	• Bridge over Kishwaukee River near Briarwood Rd. to be widened, paired, or replaced. • Realignment of Haligus Road to Mt. Thabor Rd. • Realignment of Briarwood Rd.	• New railroad structure over IL 176 near Elmhurst St. • Urban (100 ft.) alternative between Lincoln Pkwy and Erick St. • Grade separation of the McHenry Branch of Metra service line with at-grade intersection gates as an alternate short-term solution.	• Realignment of Barreville Rd., Behan Rd., Buhl Rd., East Terra Cotta Ave., Bay View Beach Rd., Wright Rd., and Riverside Dr.	• Realignment of Woods Ave. • Realignment of Wauconda Rd. and Dedlow Rd. • Closure of S. Wright Rd. at Nish Rd. and IL 176 and realigned north of IL 176.	• Cul-de-sac: Arbor Rd. and Slocum Lake Rd.

Summary of Roadway Cross Section Recommendations

Four types of roadway cross sections are recommended for the IL 176 SRA Corridor as the ultimate roadway configurations.

1. From IL 23 (State Street) to Deerpass Road, in the City of Marengo, a five-lane urban cross section is recommended within a desirable right-of-way width of 100 feet from IL 23 (State Street) to Deerpass Road. This includes two through lanes in each direction with curb and gutter, a 12 foot two-way center left turn lane, and five foot sidewalks.

2. From Deerpass Road to Mt. Thabor Road, a four-lane rural cross section within a desirable right-of-way width of 220 feet. The cross section includes two through lanes in each direction, six foot inner shoulders, 10 foot outer shoulders, and a 50 foot depressed grass median.

3. From Mt. Thabor Road to Oak Street and then from Lincoln Parkway to US 12 (Rand Road) a four-lane suburban cross section is recommended within a desirable right-of-width of 100 to 120 feet. It includes two through lanes in each direction with curb and gutter, a 10 foot multi-use path, a five foot sidewalk, and a 22 foot barrier median.

4. From Oak Street to Lincoln Parkway, a four-lane suburban cross section is recommended within a desirable right-of-width of 130 feet. It includes two through lanes in both directions with curb and gutter, a 10 foot multi-use path, a five foot sidewalk, a 22 foot barrier median, and incorporates an existing frontage road on the south side of IL 176.

Summary of Recommended Medians and Access Control

Three types of medians and access control corresponding to ultimate roadway cross sections are recommended:

1. From IL 23 (State Street) to Deerpass Road a center 12 foot painted two-way left turn lane is recommended. This dedication of a center turning lane will provide access to adjacent properties without blocking through traffic.

2. From Deerpass Road to Mt. Thabor Road, a 50 foot depressed grass median is recommended. The median limits access to right-in and right-out turning movements at all locations except dedicated public roadways. The median width and side slopes protect travelers from head-on collisions due to vehicles crossing over into the opposite lanes. Where appropriate, protected U-turns will be placed to provide greater accessibility to properties limited to right-in and right-out movements.

3. From Mt. Thabor Road to US 12 (Rand Road), a 22 foot barrier median is recommended. The barrier limits access to right-in and right-out turning movements at all locations except dedicated public roadways. A six inch curb protects travelers from head-on collisions due to vehicles crossing over into the opposite lanes. The 22 foot width of the median will taper and flare as needed to accommodate turning lanes at intersections.

Summary of Structure Recommendations

Five box culverts, five roadway bridges, and a railroad bridge are needed to be built or modified to accommodate the recommended roadway (**Table S.2**).

Table S.2 Required Structures and Structure Modifications

	Structure Location	Structure Type	Description
1.	Deerpass Rd.	Box Culvert	Extended or replaced over drainage ditch
2.	Kishwaukee River (N. Union Rd.) (SN # 056-0004)	Roadway Bridge	Widened, paired, or replaced for total of 4-lanes
3.	Kishwaukee River (McCue Rd.) (SN # 056-0005)	Roadway Bridge	Widened, paired, or replaced for total of 4-lanes
4.	IL 47 (Eastwood Dr.)/IL 176 Jog	Box Culvert	Extended or replaced over drainage ditch
5.	Kishwaukee River (Ohnstad Rd.)	Roadway Bridge	Widened, paired, or replaced for total of 4-lanes
6.	UP NW Metra (Harvard Crossing) (SN # 056-0045)	Railroad Bridge	Span over IL 176 to be widened
7.	Burton's Bridge (Fox River) (SN # 056-0038)	Roadway Bridge	Widened, paired, or replaced for total of 4-lanes
8.	Cotton Creek Bridge (SN # 056-0034)	Roadway Bridge	Widened, paired, or replaced for total of 4-lanes
9.	Three locations between N. Williams Park Rd. and Anderson Rd.	Box Culvert	3 box culverts over Slocum Creek extended or replaced

Three bridges over the Kishwaukee River would need to be widened, paired, or replaced. The construction at these locations would likely require an assessment of the environmental impacts. The Kishwaukee River has been rated a Class "A" river by the Illinois Department of Natural Resources. The Class "A" rating identifies the Kishwaukee River as a unique aquatic resource comparable to a stream without human disturbance. The Class "A" rating also indicates the presence of a significant number of intolerant species of fish.

The existing Harvard branch of the Union Pacific Northwest Metra Line bridge structure over IL 176 will likely have to be replaced. Its span across IL 176 is not sufficient for four 12 foot travel lanes on IL 176. During Phase I engineering, the feasibility of replacing this structure would have to be investigated using factors such as cost, rail service disruption, construction phasing, and use of narrow highway lanes.

Burton's Bridge over the Fox River would be widened, repaired, or replaced. For bridges over the Fox River between Algonquin and IL 173, the Department of Natural Resources has set a minimum right-of-limit of 100 feet and a minimum vertical clearance for such bridges of 15 feet above normal pool level. **(Source: Amended at 15 Ill. Reg. 9068, effective June 10, 1991)** The Fox River is a navigable waterway and is therefore under the jurisdiction of the U. S. Army Corps of Engineers. The widening, or new construction of Burton's Bridge over the Fox River, must also be coordinated with the Corps.

Summary of Roadway Realignment Recommendations

The following intersections will be realigned to correct angle deficiencies or to permit straight through movements across IL 176:

- McCue Road
- Dean Street – Southbound approach
- Swanson Road
- Pleasant Valley Road
- Haligus Road – Realigned to Mt. Thabor Road
- Ohnstad Road and Briarwood Road – Realigned to form a single perpendicular intersection
- IL 31/IL 176 intersection - Shifts north at the intersection and south east of the intersection as determined by a different study
- Smith Road
- Barreville Road
- Behan Road
- Buhl Road
- Sherman Boulevard
- Griswold Avenue
- Newport Court
- Janet Drive
- Closure of S. Wright Road and realigned north to Riverside Drive
- Mack Drive and Forest Garden Road – Realigned to form a single perpendicular intersection
- Commercial Drive just west of the US 12 (Rand Road) interchange

The following portions of IL 176 will be realigned due to planning constraints:

- West of Mt. Thabor Road - IL 176 shifts south to avoid Mt. Thabor Cemetery
- Terra Cotta Road intersection – IL 176 shifts south to avoid the historic Colonel Palmer property

Summary of Transit Recommendations

It is recommended that bus services be limited to express services along this SRA corridor. This express bus service should have signal preemption capability, which can be deployed when buses are running behind schedule.

It is recommended that space be reserved along the IL 176 SRA corridor for future bus stops, shelters, and turnouts at regular intervals. Bus turnouts are often at signalized intersections with a one-quarter to one-half mile spacing. These locations are also typically located near existing or planned commercial, employment, and transportation centers.

For bus stop areas, including bus turnouts and terminals, a rigid pavement design is strongly recommended. Due to loads and shear forces applied to pavement surfaces during bus starting and stopping movements, this pavement surface has the best potential to retain its shape. The roadway should meet or exceed Pace development guidelines for its bus services. These guidelines recommend for bus service that a road have 12 foot lanes and be designed to handle 20,000 pounds per vehicle axle.

High occupancy vehicle (HOV) lanes are not recommended. To justify the minimum curb lane HOV, route segments should have an existing or projected transit ridership of at least 1,200 one-way passengers in the peak hour and between 15 and 40 vehicles must run one way during the peak hour.

Consideration should be given to the development of Park-and-Ride facilities at IL 47 (Eastwood Drive), US 14, IL 31, and US 12 (Rand Road). The specific locations of these facilities should be planned by local governments to ensure coordination of development with transportation and public transit facilities. Consideration should also be given to appropriate signage to the new Pace bus services as well as for the extended Metra services. Directional signs should identify bus stops as well as area Metra stations. For bus stops on the IL 176 SRA corridor, informational signage should provide schedules as well as graphic illustrations of routes and connecting routes.

Summary of Construction and Ultimate Right-of-Way Cost Estimates

Cost estimates for the recommendations are based on historical per mile roadway cost figures used by IDOT. Unit costs were used for recommended improvements at traffic signal intersections and structures. The cost estimates are stated current dollars and were divided into construction, engineering, and right-of-way cost categories (**Table S.3**).

Table S.3 2009 Construction Cost Estimates for IL 176 SRA

Improvement	Units	Quantity	Cost	Estimated Cost
Roadway*	Lane Mile	107.6	$1,800,000	$193,698,000
Intersection Signals	Intersection	38.0	$179,000	$6,802,000
Intersection Realignments	Intersection	17.0	$775,000	$13,175,000
Transit Improvement	Bus Stop	126.0	$30,000	$3,780,000
	Signal Priority	37.0	$7,200	$266,400
	Park/Ride	4.0	$60,000	$240,000
Sidewalk/Multi-Use Path**	Linear Feet	257,300	$66	$16,981,800
Lighting	Pole	152	$6,000	$912,000
Culvert Structures	Linear Feet	708	$200	$141,600
Kishwaukee River Bridges				
SN 056-004	Square Feet	3,132	$150	$469,800
SN 056-005	Square Feet	1,720	$150	$258,000
SN 056-0069	Square Feet	6,287	$150	$943,080
Rail Bridge SN 056-0045	Square Feet	4,000	$250	$1,000,000
Fox River Bridge SN 056-0038	Square Feet	139,200	$250	$34,800,000
Cotton Creek Bridge SN 056-0034	Square Feet	3,016	$150	$452,400
Bike Path Grade-Separation	Bicycle Bridge	1	$2,000,000	$2,000,000
4-Lane CNW Railroad Grade-Separation	Lump Sum	1	$5,800,000	$5,800,000
Total Construction Cost				**$281,720,080**
Phase I Engineering				$16,814,000
Phase II Engineering				$23,817,000
Construction Engineering				$28,022,000
Total Engineering Cost				**$68,653,000**
Right-of-way Acquisition	Acre	238.9	$84,000	**$20,067,091**
TOTAL ESTIMATED COST				**$370,440,171**

*Roadway miles do not include 200 ft. at realigned intersections.
** Sidewalk cost includes a 10 ft. multi-use path and a 5 ft. sidewalk.